Volume No. 1

ARMY TM 9-2320-387-24-1
AIR FORCE TO 36A12-1A-3052-1

TECHNICAL MANUAL

UNIT, DIRECT SUPPORT, AND GENERAL SUPPORT MAINTENANCE

FOR

TRUCK, UTILITY: S250 SHELTER CARRIER, 4X4, M1113 (2320-01-412-0143) (EIC: B6B)

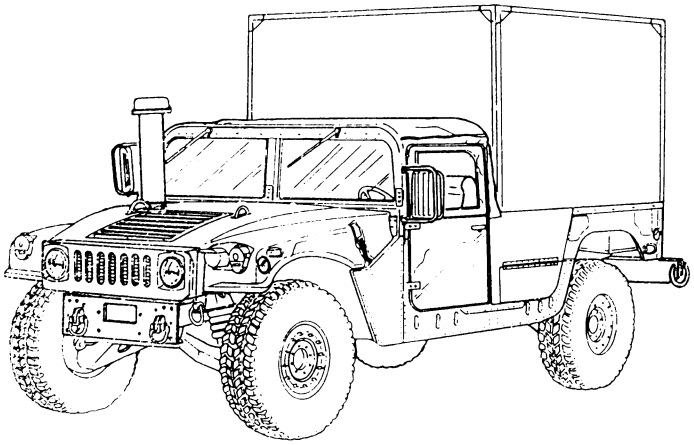

TRUCK, UTILITY: UP-ARMORED CARRIER, 4X4, M1114 (2320-01-413-3739) (EIC: B6C)

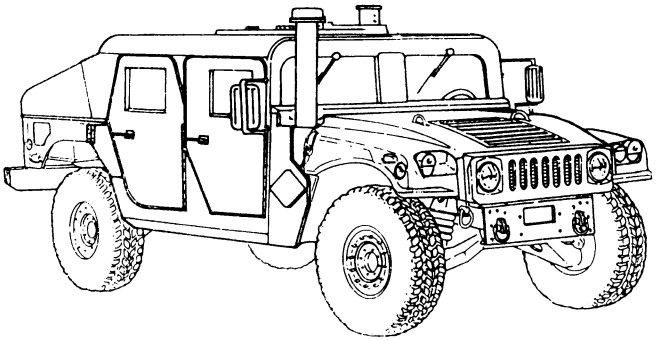

HOW TO USE THIS MANUAL	vii
INTRODUCTION	1-1
SERVICE AND TROUBLESHOOTING (UNIT) INSTRUCTIONS	2-1
ENGINE SYSTEMS (UNIT) MAINTENANCE	3-1
ELECTRICAL SYSTEMS (UNIT) MAINTENANCE	4-1
TRANSMISSION AND TRANSFER CASE (UNIT) MAINTENANCE	5-1
PROPELLER SHAFTS, AXLES, AND SUSPENSION (UNIT) MAINTENANCE	6-1
BRAKE SYSTEM (UNIT) MAINTENANCE	7-1
WHEELS AND STEERING (UNIT) MAINTENANCE	8-1
FRAME (UNIT) MAINTENANCE	9-1

Approved for public release; distribution is unlimited.

HEADQUARTERS, DEPARTMENTS OF THE ARMY AND THE AIR FORCE

DECEMBER 1997

WARNING

EXHAUST GASES CAN KILL

Brain damage or death can result from heavy exposure. Precautions must be followed to ensure crew safety when the personnel heater, main, or auxiliary engine of any vehicle is operated for any purpose.

1. Do not operate your vehicle engine in enclosed areas.
2. Do not idle vehicle engine with vehicle windows closed.
3. Be alert at all times for exhaust odors.
4. Be alert for exhaust poisoning symptoms:
   - Headache
   - Dizziness
   - Sleepiness
   - Loss of muscular control
5. If you see another person with exhaust poisoning symptoms:
   - Remove person from area
   - Expose to open air
   - Keep person warm
   - Do not permit physical exercise
   - Administer artificial respiration, if necessary*
   - Notify a medic

   *For artificial respiration, refer to FM 21-11.
6. BE AWARE, the field protective mask for Nuclear, Biological, or Chemical (NBC) protection will not protect you from carbon monoxide poisoning.

THE BEST DEFENSE AGAINST EXHAUST POISONING IS ADEQUATE VENTILATION.

WARNING SUMMARY

- Drycleaning solvent is flammable and will not be used near an open flame. A fire extinguisher will be kept nearby when the solvent is used. Use only in well-ventilated places. Failure to do this may result in injury to personnel and/or damage to equipment.
- Compressed air used for cleaning purposes will not exceed 30 psi (207 kPa). Use only with effective chip guarding and personal protective equipment (goggles/shield, gloves, etc.).
- Diesel fuel is highly flammable. Do not perform any procedure near fire, flames, or sparks. Severe injury or death will result.
- Do not touch hot exhaust system components with bare hands. Severe injury will result.
- Do not remove surge tank filler cap before releasing internal pressure when engine temperature is above 190°F (88°C). Steam or hot coolant under pressure will cause injury.
- Do not drain oil when engine is hot. Severe injury to personnel will result.
- Always wear eye protection when bleeding brakes. Failure to do this may cause injury if brake fluid comes in contact with eyes.
- Do not perform battery system checks or inspections while smoking or near fire, flames, or sparks. Batteries may explode, causing damage to vehicle, injury, or death to personnel.
- Remove all jewelry such as rings, dog tags, bracelets, etc. If jewelry or disconnected battery ground cable contacts battery terminal, a direct short will result, causing injury to personnel or damage to equipment.
- Use caution when testing thermostat. Hot water will cause burns.
- Negative battery cable must be disconnected before disconnecting any harness from protective control box or serious injury to personnel or damage to equipment will result.
- Keep hands and arms away from fan blade and drivebelts while engine is running or serious injury may result.
- Battery acid (electrolyte) is extremely harmful. Always wear safety goggles and rubber gloves, and do not smoke when performing maintenance on batteries. Injury will result if acid contacts eyes or skin.
- When removing battery cable clamps, disconnect ground cable first. Ensure all switches are in OFF position before disconnecting ground cable. Do not allow tools to come in contact with vehicle when disconnecting cable clamps. A direct short can result, causing instant heating of tools, tool damage, battery damage, or battery explosion.
- Allow transmission/transfer case to cool before performing maintenance. Failure to do this may cause injury.
- Always apply parking brake and chock opposite wheel before removing wheel. Avoid removing wheel when vehicle is on sloping terrain. Injury to personnel or damage to equipment may result.
- Gloves must be worn whenever handling winch cable. Severe injury may result.
- Hydraulic jacks are used for raising and lowering, and are not used to support vehicle. Never work under vehicle unless wheels are blocked and it is properly supported. Injury or damage to equipment may result if vehicle suddenly shifts or moves.
- Remove only the inner group of nuts when removing a wheel from the vehicle. Removing the outer nuts which hold the rim together while the assembly is inflated could result in serious injury or death.
- In all disassembly of the wheel assembly operations, ensure the tire is totally deflated before removing wheel nuts. Failure to follow proper safety precautions could cause serious injury or death.
- Never inflate a wheel assembly with the wheel locknuts removed in an attempt to separate inner and outer rim halves. The assembly will separate under pressure, resulting in serious injury or death.

WARNING SUMMARY (Cont'd)

- Never use wheel assemblies with studs which are damaged, loose, or have damaged threads. Damaged studs can cause improper assembly, which could cause individual fasteners to fail. Any of these situations could cause serious injury or death.
- Never use tubes in wheel assemblies. Use of a tube defeats built-in safety features, and could allow the wheel to come apart under pressure, resulting in serious injury or death.
- Use only replacement parts specified in TM 9-2320-387-24P. Wheels assembled with components which do not meet specifications could cause the assembly to separate under pressure, resulting in serious injury or death.
- Never inflate a wheel assembly without having checked wheel locknut torques that ensure that wheel locknuts are tightened to specifications. An assembly with improperly tightened locknuts could separate under pressure, resulting in serious injury or death.
- Always use a tire inflation cage for inflation purposes. Stand on one side of cage during inflation; never directly in front. Keep hands out of the cage during inflation. Inflate assembly to recommended pressure using a clip-on air chuck. Do not exceed 30 psi (207 kPa) cold bias tire inflation pressure or 50 psi (344 kPa) cold radial tire inflation pressure. Failure to follow these instructions may result in serious injury or death.
- NBC contaminated filters must be handled and disposed of only by authorized and trained personnel. The unit commander or senior officer in charge of maintenance personnel must ensure that prescribed protective clothing (FM 3-4) is used, and prescribed safety measures and decontamination procedures (FM 3-5) are followed. The local unit SOP is responsible for final disposal of contaminated air filters. Failure to do this may cause severe injury to personnel.
- Seatbelts are to be replaced as a set. Failure to do this may cause injury to personnel or damage to equipment.
- The Department of Transportation requires 105 mm cannon ammunition to be in wooden boxes when transporting ammunition on public highways, by fixed wing aircraft, rail, or ship. Movement of cannon ammunition in fiber containers (inner pack) in the HMMWV ammunition rack is restricted to other than public highways.
- Air-conditioning system must be discharged prior to replacing components. Failure to do this may result in injury to personnel or damage to equipment.

ARMY TM 9-2320-387-24-1
AIR FORCE TO 36A12-1A-3052-1

CHANGE

NO. 2

HEADQUARTERS,
DEPARTMENTS OF THE ARMY, AND
THE AIR FORCE
Washington, D.C., 30 July 2004

TECHNICAL MANUAL
VOLUME 1 OF 2
UNIT, DIRECT SUPPORT, AND GENERAL SUPPORT MAINTENANCE FOR

TRUCK, UTILITY: S250 SHELTER CARRIER, 4X4, M1113 (2320-01-412-0143) (EIC: B6B)

TRUCK, UTILITY: UP - ARMORED CARRIER, 4X4, M1114 (2320-01-413-3739) (EIC: B6C)

TM 9-2320-387-24-1, 31 December 1997, is changed as follows:

1. Remove old pages and insert new pages as indicated below.
2. New or changed material is indicated by a vertical bar in the margin of the page.
3. File this change sheet in front of the publication for reference purposes.

Remove pages	Insert page
A through D	A through I/(J blank)
i and ii	i and ii
1-1 and 1-2	1-1 and 1-2
1-35 and 1-36	1-35 and 1-36
2-1 through 2-6	2-1 through 2-6
2-9 and 2-10	2-9 and 2-10
2-27 and 2-28	2-27 and 2-28
2-47 through 2-49/(2-50 blank)	2-47 through 2-49/(2-50 blank)
2-111 through 2-114	2-111 through 2-114
2-207 through 2-210	2-207 through 2-210
2-441 through 2-444	2-441 through 2-444
2-451/(2-452 blank)	2-451/(2-452 blank)
2-455 through 2-460	2-455 through 2-460
2-471 through 2-476	2-471 through 2-478.7/(2-478.8 blank)
3-1 through 3-10	3-1 through 3-10
3-21 through 3-24	3-21 through 3-24
3-27 and 3-28	3-27 and 3-28
3-31 through 3-34	3-31 through 3-34
3-39 through 3-70	3-39 through 3-70
3-75 and 3-76	3-75 and 3-76

Approved for public release; distribution is unlimited.

Remove pages	Insert pages
3-79 through 3-94	3-79 through 3-94
3-97 through 3-112	3-97 through 3-112
3-117 through 3-120	3-117 through 3-120
3-127 and 3-128	3-127 and 3-128
3-131 through 3-134	3-131 through 3-134
3-137 through 3-146	3-137 through 3-191/(3-192 blank)
4-1 through 4-8	4-1 through 4-8
4-11 through 4-14	4-11 through 4-14
4-17 through 4-18.4	4-17 through 4-18.4
4-18.11 through 4-26	4-18.11 through 4-26
4-29 and 4-30	4-29 and 4-30
4-33 and 4-34	4-33 and 4-34
4-37 and 4-38	4-37 and 4-38
4-45 and 4-46	4-45 and 4-46
4-49 and 4-50	4-49 and 4-50
4-55 and 4-56	4-55 and 4-56
4-61 through 4-64	4-61 through 4-64
4-69 through 4-78	4-69 through 4-78
4-83 through 4-100	4-83 through 4-100
4-109 and 4-110	4-109 and 4-110
4-115 through 4-124	4-115 through 4-124
4-129 through 4-134	4-129 through 4-134
4-137 through 4-144	4-137 through 4-144
5-1 through 5-6	5-1 through 5-6
5-11 through 5-18	5-11 through 5-18
5-21 through 5-36	5-21 through 5-36
6-1 and 6-2	6-1 and 6-2
6-5 through 6-10	6-5 through 6-10
6-13 through 6-18	6-13 through 6-18
6-21 and 6-22	6-21 and 6-22
6-27 through 6-30	6-27 through 6-30
6-35 through 6-38	6-35 through 6-38
6-45 through 6-62	6-45 through 6-62
7-3 through 7-6	7-3 through 7-6
7-9 through 7-20	7-9 through 7-20
7-27 through 7-38	7-27 through 7-38
7-41 and 7-42	7-41 and 7-42
7-45 through 7-56	7-45 through 7-56
8-7 and 8-8	8-7 and 8-8
8-13 and 8-14	8-13 and 8-14
8-17 and 8-18	8-17 and 8-18

Remove pages	Insert pages
8-21 and 8-22	8-21 and 8-22
8-33 through 8-56	8-33 through 8-56
8-59 through 8-76	8-59 through 8-83/(8-84 blank)
9-1 through 9-12	9-1 through 9-12
9-15 and 9-16	9-15 and 9-16
INDEX 1 through INDEX 53/ (INDEX 54 Blank)	INDEX 1 through INDEX 54

By Order of the Secretary of the Army:

PETER J. SCHOOMAKER
General, United States Army
Chief of Staff

Official:

JOEL B. HUDSON
Administrative Assistant to the
Secretary of the Army

By Order of the Secretary of the Air Force:

JOHN P. JUMPER
General, United States Air Force
Chief of Staff

Official:

GREGORY S. MARTIN
General, United States Air Force
Commander, Air Force Materiel Command

Distribution:

To be distributed in accordance with the initial distribution number (IDN) 381020, requirements for TM 9-2320-387-24-1.

CHANGE

NO. 1

HEADQUARTERS,
DEPARTMENTS OF THE ARMY, AND
THE AIR FORCE
Washington, D.C., *31 OCTOBER 2001*

TECHNICAL MANUAL
VOLUME 1 OF 2
UNIT, DIRECT SUPPORT, AND
GENERAL SUPPORT MAINTENANCE
FOR

TRUCK, UTILITY: S250 SHELTER CARRIER, 4X4, M1113 (2320-01-412-0143) (EIC: B6B)

TRUCK, UTILITY: UP - ARMORED CARRIER, 4X4, M1114 (2320-01-413-3739) (EIC: B6C)

TM 9-2320-387-24-1, December 1997, is changed as follows:

1. Remove old pages and insert new pages as indicated below.
2. New or changed material is indicated by a vertical bar in the margin of the page.
3. File this change sheet in front of the publication for reference purposes.

Remove pages	Insert page
Warning c/(d blank)	Warning c/(d blank)
None	A through D (after warning d blank)
i through iv	i through iv
1-1 and 1-2	1-1 and 1-2
1-21 and 1-22	1-21 and 1-22
1-33 and 1-34	1-33 and 1-34
1-39 and 1-40	1-39 and 1-40
2-5 through 2-10	2-5 through 2-10
2-13 and 2-14	2-13 and 2-14
2-19 and 2-20	2-19 and 2-20
2-23 through 2-28	2-23 through 2-28
2-97 and 2-98	2-97 and 2-98
2-199 through 2-202	2-199 through 2-202
2-207 through 2-210	2-207 through 2-210
None	2-210.1 through 2-210.4
2-211/(2-212 blank)	2-211/(2-212 blank)
2-385 and 2-386	2-385 and 2-386
2-407 and 2-408	2-407 and 2-408
2-419 and 2-420	2-419 and 2-420
2-441 through 2-444	2-441 through 2-444
2-449 and 2-450	2-449 and 2-450
3-11 through 3-16	3-11 through 3-16
3-21 through 3-38	3-21 through 3-38
3-55 through 3-60	3-55 through 3-60

Approved for public release; distribution is unlimited.

Remove pages	Insert pages
3-81 through 3-94	3-81 through 3-94
3-109 through 3-130	3-109 through 3-130
3-133 and 3-134	3-133 and 3-134
3-141 and 3-142	3-141 and 3-142
None	3-142.1 and 3-142.2
3-143 through 3-146	3-143 through 3-146
4-1 through 4-18	4-1 through 4-18
None	4-18.1 through 4-18.12
4-19 through 4-24	4-19 through 4-24
4-65 and 4-66	4-65 and 4-66
4-73 through 4-76	4-73 through 4-76
4-79/(4-80 blank)	4-79 and 4-80
4-99 through 4-102	4-99 through 4-102
4-109 and 4-110	4-109 and 4-110
5-7 through 5-12	5-7 through 5-12
5-23 and 5-24	5-23 and 5-24
5-27 through 5-30	5-27 through 5-30
6-13 through 6-26	6-13 through 6-26
6-29 through 6-38	6-29 through 6-38
6-51 and 6-52	6-51 and 6-52
None	6-52.1 and 6-52.2
6-53 and 6-54	6-53 and 6-54
7-1 and 7-2	7-1 and 7-2
7-5 through 7-22	7-5 through 7-22
7-25 through 7-46	7-25 through 7-46
8-11 and 8-12	8-11 and 8-12
8-15 and 8-16	8-15 and 8-16
8-23 through 8-34	8-23 through 8-34
8-63 and 8-64	8-63 and 8-64
8-69 and 8-70	8-69 and 8-70
8-73 and 8-74	8-73 and 8-74
INDEX 1 through	INDEX 1 through
INDEX 45/(INDEX 46 blank)	INDEX 53/(INDEX 54 blank)
DA Form 2028-2	DA Form 2028

By Order of the Secretary of the Army:

ERIC K. SHINSEKI
General, United States Army
Chief of Staff

Official:

JOEL B. HUDSON
Administrative Assistant to the
Secretary of the Army
0119703

By Order of the Secretary of the Air Force:

RONALD R. FOGLEMAN
General, United States Air Force
Chief of Staff

Official:

HENRY VICCELLIO, JR.
General, United States Air Force
Commander, Air Force Materiel Command

Distribution:

To be distributed in accordance with the initial distribution number (IDN) 381020, requirements for TM 9-2320-387-24-1.

LIST OF EFFECTIVE PAGES

NOTE: The portion of the text affected by the changes is indicated by a vertical line in the outer margins of the page.

Dates of issue for original and changed pages of volume 2 are:

Original..... 0 ..31 December 1997
Change ..... 1 .... 31 October 2001
Change ..... 2 .....

TOTAL NUMBER OF PAGES IN THIS PUBLICATION IS 1364 CONSISTING OF THE FOLLOWING:

Page No.	*Change No.
VOLUME 1	
a-b	0
c	1
d Blank	1
A - D	2
E - I Added	2
J Blank Added	2
i	2
ii-iii	0
iv	1
v-xiii	0
xiv Blank	0
1-1	2
1-2 - 1-20	0
1-21	1
1-22 - 1-33	0
1-34	1
1-35	2
1-36 - 1-39	0
1-40	1
2-1	0
2-2 - 2-4	2
2-5	1
2-6	2
2-7 - 2-9	1
2-10	2
2-11 - 2-12	0
2-13	1
2-14 - 2-18	0
2-19	1
2-20 - 2-22	0
2-23 - 2-25	1
2-26	0
2-27	2
2-28	1
2-29 - 2-47	0
2-48	2
2-48.1 - 2-48.2 Added	2
2-49	2
2-50 Blank	0
2-51 - 2-59	0
2-60 Blank	0
2-61 - 2-67	0
2-68 Blank	0
2-69 - 2-73	0
2-74 Blank	0
2-75 - 2-97	0
2-98	1
2-99 - 2-111	0
2-112	2
2-112.1 and 2-112.2 Added	2
2-113	2
2-114 - 2-139	0
2-140 Blank	0
2-141 - 2-145	0
2-146 Blank	0
2-147 - 2-157	0
2-158 Blank	0
2-159 - 2-189	0
2-190 Blank	0
2-191 - 2-197	0
2-198 Blank	0
2-199	1
2-200	0
2-201 - 2-202	1
2-203 - 2-207	0
2-208	2
2-208.1 - 2-208.2 Added	2
2-209 - 2-210	2
2-210.1 - 2-210.4 Added	1
2-211	1
2-212 Blank	0
2-213 - 2-235	0
2-236 Blank	0
2-237 - 2-245	0
2-246 Blank	0
2-247 - 2-287	0
2-288 Blank	0
2-289 - 2-303	0
2-304 Blank	0
2-305 - 2-373	0
2-374 Blank	0
2-375 - 2-383	0
2-384 Blank	0
2-385	1
2-386 - 2-407	0
2-408	1
2-409 - 2-417	0
2-418 Blank	0
2-419	1
2-420 - 2-431	0
2-432 Blank	0
2-433 - 2-440	0
2-441 - 2-442	2
2-442.1 - 2-442.2 Added	2
2-443 - 2-444	2
2-445 - 2-449	0
2-450	1
2-451	2
2-452 Blank	0
2-453 - 2-455	0
2-456 - 2-459	2
2-460 - 2-469	0
2-470 Blank	0
2-471	0
2-472	2
2-473 Blank	2
2-474 - 2-475	2
2-476	0
2-477	2
2-478 Blank	0
2-478.1 - 2-478.8 Blank Added	2
2-479 - 2-487	0
2-488 Blank	0
2-489 - 2-522	0
3-1	0
3-2	2
3-3	0
3-4 - 3-6	2
3-7	0
3-8 - 3-10	2
3-11	0
3-12 - 3-16	1

*Zero in this column indicates original page.

LIST OF EFFECTIVE PAGES (Contd)

Page No.	*Change No.
3-17 - 3-21	0
3-22 - 3-23	2
3-24 - 3-27	1
3-28	2
3-29 - 3-30	1
3-31	2
3-32	0
3-33	1
3-34	2
3-35 - 3-38	1
3-39	0
3-40 - 3-43	2
3-44 - 3-45	0
3-46 - 3-52	2
3-53	0
3-54 - 3-56	2
3-57	1
3-58 - 3-60	2
3-60.1 - 3-60.2 Added	2
3-61 - 3-64	2
3-65	0
3-66 - 3-68	2
3-69	0
3-70	2
3-71 - 3-75	0
3-76	2
3-77 - 3-78	0
3-79 - 3-80	2
3-81	0
3-82	2
3-83	1
3-84	2
3-85	1
3-86	2
3-87	1
3-88 - 3-90	2
3-91	0
3-92	2
3-93	1
3-94	2
3-95 - 3-97	0
3-98 - 3-100	2
3-101	0
3-102	2
3-103	0
3-104	2
3-105	0
3-106 - 3-107	2
3-108 Blank	0
3-109	2
3-110	0
3-111	1
3-112	2
3-113 - 3-116	1
3-117	2
3-118	0
3-119 - 3-120	2
3-121 - 3-126	1
3-127	2
3-128 - 3-130	1
3-131 - 3-134	2
3-135 - 3-137	0
3-138	2
3-139	0
3-140	2
3-141	1
3-142	2
3-142.1 - 3-142.2	2
3-142.3 - 3-142.8 Added	2
3-143 - 3-144	2
3-144.1 - 3-144.4 Added	2
3-145 - 3-146	2
3-147 - 3-191 Added	2
3-192 Blank Added	2
4-1 - 4-2	2
4-2.1 - 4-2.4 Added	2
4-3 - 4-4	2
4-5 Blank	2
4-6 - 4-7	1
4-8	2
4-9 -4-11	1
4-12 - 4-14	2
4-15 - 4-17	1
4-18	2
4-18.1	1
4-18.2	2
4-18.3	1
4-18.4	2
4-18.5 -4-18.11	1
4-18.12	2
4-19 - 4-20	2
4-21	0
4-22	2
4-23	0
4-24	2
4-25	0
4-26	2
4-27	0
4-28 Blank	0
4-29	0
4-30	2
4-31 - 4-33	0
4-34	2
4-35 - 4-37	0
4-38	2
4-39 - 4-44	0
4-45	2
4-46 - 4-48	0
4-49 - 4-50	2
4-51 - 4-55	0
4-56	2
4-57 - 4-60	0
4-61 - 4-64	2
4-65	1
4-66 - 4-68	0
4-69 - 4-70	2
4-71	0
4-72	2
4-73	0
4-74 - 4-75	2
4-76 - 4-77	0
4-78	2
4-79 - 4-80	1
4-81 - 4-83	0
4-84 - 4-86	2
4-87	0
4-88 - 4-90	2
4-91	0
4-92 - 4-94	2
4-95	0
4-96	2
4-97	0
4-98 - 4-100	2
4-101	1
4-102 - 4-109	0
4-110	2
4-111 - 4-115	0
4-116	2
4-117	0
4-118 - 4-122	2
4-123	0
4-124	2
4-125 - 4-129	0
4-130	2
4-131	0
4-132	2
4-133	0
4-134	2
4-135 - 4-137	0
4-138	2
4-139	0
4-140 - 4-144	2
4-145 - 4-148	0
5-1	0
5-2	2
5-3	0

*Zero in this column indicates original page.

LIST OF EFFECTIVE PAGES (Contd)

Page No.	*Change No.
5-4	2
5-5	0
5-6	2
5-7 - 5-11	1
5-12	2
5-13	0
5-14 - 5-15	2
5-16 - 5-17	0
5-18	2
5-19 - 5-21	0
5-22	2
5-23	0
5-24	2
5-25	0
5-26	2
5-27	0
5-28	2
5-29	1
5-30	2
5-31	0
5-32	2
5-33	0
5-34	2
5-35	0
5-36	2
5-37 - 5-39	0
5-40 Blank	0
6-1	0
6-2	2
6-3 - 6-5	0
6-6	2
6-7	0
6-8	2
6-9	0
6-10	2
6-11 - 6-12	0
6-13	2
6-14 - 6-15	0
6-16 - 6-18	2
6-19 - 6-20	1
6-21	0
6-22	2
6-23	0
6-24 - 6-25	1
6-26 - 6-27	0
6-28	2
6-29	0
6-30	2
6-31 - 6-34	1
6-35 - 6-36	2
6-37	1
6-38	2
6-39 - 6-45	0
6-46 - 6-47	2
6-48	0
6-49 - 6-52	2
6-52.1	1
6-52.2	2
6-53	0
6-54	2
6-55	0
6-56	2
6-57	0
6-58	2
6-59	0
6-60	2
6-61	0
6-62	2
6-63 - 6-66	0
7-1	1
7-2	0
7-3 - 7-4	2
7-5	0
7-6	2
7-7 - 7-9	1
7-10	2
7-11 - 7-12	1
7-13 - 7-16	2
7-17	0
7-18 - 7-20	2
7-21	1
7-22 - 7-25	0
7-26 - 7-27	1
7-28	2
7-29	1
7-30	2
7-31	0
7-32	2
7-33	1
7-34	2
7-35	0
7-36	2
7-37	0
7-38	2
7-39 - 7-41	1
7-42	2
7-43 - 7-45	1
7-46 - 7-54	2
7-55	0
7-56	2
7-57	0
7-58 Blank	0
8-1 - 8-7	0
8-8	2
8-9 - 8-10	0
8-11	1
8-12 - 8-13	0
8-14	2
8-15	1
8-16	0
8-17 - 8-18	2
8-19 - 8-21	0
8-22	2
8-23	0
8-24 - 8-25	1
8-26 - 8-27	0
8-28 - 8-32	1
8-33	0
8-34 - 8-37	2
8-38 - 8-39	0
8-40	2
8-41	0
8-42	2
8-43	0
8-44	2
8-45	0
8-46 - 8-50	2
8-51	0
8-52	2
8-53	0
8-54	2
8-55	0
8-56	2
8-57 - 8-59	0
8-60	2
8-61	0
8-62	2
8-63	0
8-64	2
8-64.1 - 8-64.4 Added	2
8-65 - 8-66	2
8-66.1 - 8-66.4 Added	2
8-67 - 8-72	2
8-72.1 - 8-72.2 Added	2
8-73	2
8-74 Blank	2
8-74.1 - 8-74.2 Added	2
8-75 - 8-76	2
8-77 - 8-83 Added	2
8-84 Blank Added	2
9-1	0
9-2 - 9-6	2
9-7	0
9-8 - 9-11	2
9-12 - 9-15	0
9-16	2

*Zero in this column indicates original page.

LIST OF EFFECTIVE PAGES (Contd)

Page No.	*Change No.
9-17	0
9-18 Blank	0
Index 1	1
Index 2 - Index 54	2
FP-1	0
FP-2 Blank	0
FP-3	0
FP-4 Blank	0
FP-5	0
FP-6 Blank	0
FP-7	0
FP-8 Blank	0
FP-9	0
FP-10 Blank	0
FP-11	0
FP-12 Blank	0
FP-13	0
FP-14 Blank	0
FP-15	0
FP-16 Blank	0
FP-17	0
FP-18 Blank	0
FP-19	0
FP-20 Blank	0
FP-21	0
FP-22 Blank	0
FP-23	0
FP-24 Blank	0
FP-25	0
FP-26 Blank	0
FP-27	0
FP-28 Blank	0
FP-29	0
FP-30 Blank	0

VOLUME 2

Page No.	*Change No.
a	0
b	1
A - D	2
E - F Added	2
i	2
ii	1
iii-iv	0
10-1 - 10-2	2
10-3 - 10-5	1
10-6 - 10-7	2
10-8	1
10-9	2
10-10	0
10-11	1
10-12	2
10-13	0
10-14	2
10-15 - 10-17	0
10-18	1
10-18.1	2
10-18.2 Blank	1
10-19	1
10-20	2
10-21 -10-22	1
10-23 - 10-25	2
10-26	1
10-27 - 10-28	2
10-29	0
10-30	2
10-31 - 10-32	0
10-33 - 10-35	2
10-36 - 10-37	0
10-38	2
10-39 - 10-41	0
10-42 - 10-45	2
10-46 - 10-48	0
10-49	2
10-50 - 10-51	1
10-52 - 10-53	0
10-54 - 10-58	2
10-59	1
10-60	0
10-61	2
10-62	0
10-63 - 10-65	2
10-66	0
10-67	2
10-68	0
10-69 - 10-70	2
10-71	0
10-72	2
10-73	0
10-74	2
10-75	0
10-76	2
10-76.1	2
10-76.2 Blank	1
10-77	1
10-78	2
10-79	1
10-80 - 10-82	0
10-83 - 10-84	2
10-85 - 10-86	0
10-87	2
10-88	1
10-89 - 10-90	0
10-91	1
10-92 - 10-95	0
10-96	1
10-97	2
10-98	0
10-98.1	1
10-98.2	2
10.98.3	1
10-98.4	2
10-98.5	1
10-98.6	2
10-98.7	1
10-98.8 - 10-98.11	2
10-98.12 Blank	2
10-98.13 - 10-98.16	2
10-98.17 - 10.-98.20 Added	2
10-99 - 10-100	2
10-101 - 10-102	0
10-103 - 10-104	2
10-105	0
10-106	2
10-107	0
10-108	2
10-109 - 10-110	1
10-111 - 10-112	0
10-113 - 10-114	2
10-115	1
10-116	2
10-117 - 10-120	1
10-121	2
10-122 - 10-127	0
10-128	2
10-128.1 Blank Added	2
10-128.2 - 10-128.14 Added	2
10-129	2
10-130 - 10-131	1
10-132	2
10-133 - 10-137	0
10-138	2
10-139	0
10-140	2
10-141 - 10-143	0
10-144	2
10-145 - 10-149	0
10-150	2
10-150.1 Blank Added	2
10-150.2 - 10-150.7 Added	2
10-150.8 Blank Added	2
10-151 - 10-152	0

*Zero in this column indicates original page.

LIST OF EFFECTIVE PAGES (Contd)

Page No.	*Change No.
10-153	2
10-154 - 10-157	0
10-158	1
10-159	2
10-160	1
11-1 - 11-4	2
11-4.1	1
11-4.2	2
11-5	1
11-6	2
11-7 - 11-9	1
11-10	2
11-11	1
11-12	2
11-12.1 - 11-12.3 Added	2
11-12.4 Blank Added	2
11-13 - 11-16	2
11-17	1
11-18	0
11-19	1
11-20	2
11-21	0
11-22	2
11-23	1
11-24	2
11-24.1 - 11-24.2 Added	2
11-25	1
11-26	2
11-27 - 11-29	1
11-30 - 11-36	2
11-37	0
11-38	2
11-39	0
11-40	2
11-40.1	1
11-40.2 Blank	1
11-41	2
11-42	0
11-43 - 11-45	1
11-46	2
11-47	0
11-48 - 11-52	2
11-53 - 11-55	1
11-56	2
11-57	0
11-58	2
11-59	1
11-60	2
11-61	1
11-62	2
11-63	1
11-64	2
11-65	1
11-66 - 11-68	2
11-68.1 - 11-68.2	2
11-68.3 - 11.68.5	1
11-68.6	2
11-68.7	1
11-68.8	2
11-68.9 - 11-68.10	1
11-69	1
11-70 - 11-73	2
11-74 - 11-77 Deleted	2
11-78 - 11-82	2
11-82.1	1
11-82.2	2
11-83	1
11-84	2
11-84.1 - 11-84.6 Deleted	2
11-85	2
11-86 - 11-89	1
11-90	2
11-91	1
11-92	2
11-93 - 11-94	1
11-95	2
11-96 - 11-97	1
11-98	2
11-99	1
11-100 - 11-101	0
11-102 - 11-103	2
11-104	1
11-105 - 11-107	0
11-108	2
11-108.1 - 11-108.7 Added	2
11-108.8 Blank Added	2
11-109	1
11-110	2
11-110.1 - 11-110.2 Added	2
11-111 - 11-112	2
11-112.1 - 11-112.2 Added	2
11-113	2
11-114	1
11-115	0
11-116	2
11-117 - 11-120	0
11-120.1 - 11-120.2 Added	2
11-121	2
11-122 - 11-123	0
11-124 - 11-125	2
11-126 - 11-127	1
11-128	2
11-129 - 11-131	1
11-132	2
11-132.1 - 11-132.7 Added	2
11-132.8 Blank Added	2
11-133	0
11-134 - 11-138	2
11-139	0
11-140	2
11-141	0
11-142	2
11-143	0
11-144 Blank	0
11-145	0
11-146	2
11-147	1
11-148 - 11-151	0
11-152	2
11-153 - 11-155	1
11-156 - 11-157	0
11-158	1
11-159 - 11-161	0
11-162 Blank	0
12-1	1
12-2	2
12-2.1	1
12-2.2	2
12-3 - 12-9	1
12-10	2
12-11	1
12-12	2
12-13 - 12-17	1
12-18	2
12-19 - 12-21	1
12-22 - 12-23	2
12-24	1
12-25 Deleted	1
12-26 Blank Deleted	1
12-27	2
12-28 - 12-30	1
12-30.1 - 12-30.2 Added	2
12-31	2
12-32	1
12-33	0
12-34 - 12-35	2
12-36	0
12-37 - 12-40	2
12-41 - 12-46	0
12-47	2
12-48 - 12-49	1
12-50 Blank	0
12-51 - 12-52	2
12-53	0
12-54	2
12-54.1	1

*Zero in this column indicates original page.

LIST OF EFFECTIVE PAGES (Contd)

Page No.	*Change No.
12-54.2 - 12-54.3	2
12-54.4	1
12-54.5 - 12-54.6	2
12-55 - 12-56	2
12-56.1	1
12-56.2	2
12-57	1
12-58	2
12-59	0
12-60	2
12-60.1	1
12-60.2 - 12-60.3	2
12-60.4 - 12-60.5	1
12-60.6	2
12-61 - 12-62	2
12-62.1 - 12.62.8	1
12-63	2
12-64 - 12-65	0
12-66 - 12-68	2
12-68.1	2
12-68.2 - 12-68.3	1
12-68.4	2
12-68.5	1
12-68.6	2
12-68.7	1
12-68.8	2
12-68.9 - 12-68.19	1
12-68.20	2
12-68.21 - 12-68.22	1
12-68.23	2
12-68.24 - 12-68.25	1
12-68.26	2
12-68.27 - 12-68.28	1
12-68.29 - 12-68.30	2
12-68.31 Added	2
12-68.32 Blank Added	2
12-69 - 12-70	2
12-71	0
12-72 - 12-73	1
12-74	0
12-75 - 12-77	2
12-78	0
12-79 - 12-81	2
12-82 - 12-83	0
12-84	2
13-1 - 13-3	0
13-4 Blank	0
14-1	1
14-2 - 14-3	0
14-4 - 14-5	1
14-6	0
14-7	1
14-8	2
14-9 - 14-22	0
15-1	0
15-2	2
15-3 - 15-5	0
15-6	2
15-7	0
15-8 - 15-10	2
15-11	0
15-12 - 15-13	2
15-14 - 15-19	0
15-20	2
15-21 - 15-23	0
15-24	2
15-25	0
15-26	2
15-27	1
15-28 - 15-29	2
15-30 - 15-31	0
15-32	2
15-33	0
15-34 - 15-35	2
15-36	0
15-37 - 15-39	2
15-40 - 15-43	0
15-44	1
15-45 - 15-47	0
15-48	2
15-49	0
15-50	2
15-51 - 15-52	0
15-53	2
15-54	0
15-55	2
15-56 - 15-58	0
15-59 - 15-62	1
15-63 - 15-64	2
15-65 - 15-66	0
15-67	2
15-68 - 15-72	0
15-73	2
15-74	1
15-75 - 15-77	0
15-78	2
15-79 - 15-81	0
15-82 - 15-85	2
15-86 - 15-90	0
15-91 - 15-95	2
15-96 - 15-97	0
15-98 - 15-99	2
15-100	0
15-101	1
15-102	2
15-103 - 15-105	0
15-106	2
15-107 - 15-110	0
15-111	2
15-112	1
15-113 - 15-114	2
15-115 - 15-116	1
15-117 - 15-119	0
15-120 - 15-121	2
15-122	0
15-123	2
15-124	0
15-125 - 15-126	2
15-127	0
15-128 Blank	0
16-1	0
16-2 - 16-3	2
16-4 - 16-5	0
16-6	2
16-7	0
16-8	2
16-9 - 16-10	0
16-11	1
16-12	2
16-13 - 16-15	0
16-16	2
16-17	0
16-18	2
16-19 - 16-21	0
16-22 Blank	0
17-1	0
17-2 Blank	0
18-1	1
18-2	2
18-3 - 18-5	0
18-6	2
18-7 - 18-9	0
18-10	2
18-10.1 - 18-10.2	2
18-10.3 - 18-10.7	1
18-10.8	2
18-10.9 - 18-10.10	1
18-10.11 - 18-10.12	2
18-11	1
18-12 - 18-13	2
18-14 - 18-15	0
18-16	2
18-17 - 18-19	0
18-20	2
18-21	0
18-22	2

*Zero in this column indicates original page.

LIST OF EFFECTIVE PAGES (Contd)

Page No.	*Change No.
18-23 - 18-27	0
18-28	2
18-29	0
18-30	2
18-31 - 18-33	0
18-34	2
18-35	0
18-36	2
18-37	0
18-38	1
18-39 - 18-40	2
18-41	0
18-42	1
18-43	2
18-44 - 18-45	0
18-46 Blank	0
19-1 - 19-3	0
19-4 - 19-5	2
19-6	0
19-7 - 19-8	2
19-9 - 19-10	0
19-11	2
19-12 - 19-13	0
19-14	2
19-15	0
19-16 Blank	0
20-1	0
20-2	2
20-3 - 20-7	0
20-8	2
20-9	0
20-10 Blank	0
21-1 - 21-2	2
21-3	0
21-4	2
21-5	0
21-6	2
21-7	0
21-8	2
21-8.1 - 21-8.2 Added	2
21-9 - 21-11	2
21-12 - 21-19	0
21-20	2
22-1 - 22-3	1
22-4	2
22-5	0
22-6 - 22-7	1
22-8	2
22-9 - 22-11	1
22-12 Blank	1
23-1 - 23-2	2
23-3 - 23-5	0
23-6	2
23-7 - 23-25 Added	2
23-26 Blank Added	2
24-1	0
24-2 - 24-4	2
24-5	0
24-6	2
24-7	1
24-8	2
24-9	1
24-10	2
24-11	0
24-12	2
24-13	0
24-14	2
24-15	0
24-16 - 24-18	2
24-19	0
24-20	2
24-21	0
24-22 - 24-24	2
24-25	0
24-26	2
24-27 - 24-29	0
24-30	2
24-31 - 24-33	0
24-34	2
24-35	0
24-36	2
24-37	0
24-38	2
24-39	0
24-40	2
25-1 - 25-2	2
25-3	1
25-4	2
25-5 - 25-8	1
25-9	0
25-10	2
25-11 - 25-15	1
25-16	2
25-17 - 25-21	1
25-22 - 25-23	0
25-24	2
25-25 - 25-27	1
25-28	2
25-29	1
25-30	2
25-31	1
25-32	2
25-33	0
25-34	1
25-35	0
25-36	2
25-36.1 - 25-36.18	2
25-36.19 Blank	2
25-36.20	2
25-36.21 - 25-36.32	1
25-36.33	2
25-36.34 - 25-36.43 Added	2
25-36.44 Blank Added	2
25-37	1
25-38 - 25-45	0
25-46	1
25-47	0
25-48	2
25-49	1
25-50	2
25-50.1	1
25-50.2	2
25-51	1
25-52	2
25-53	1
25-54	0
25-55	1
25-56	2
25-56.1 - 25-56.2	2
25-57 - 25-58	2
25-59 - 25-61	1
25-62	2
25-63	1
25-64	2
25-65	1
25-66 - 25-67	0
25-68	2
25-69 - 25-73	0
25-74 - 25-75	1
25-76	2
25-77	1
25-78	2
25-78.1 - 25-78.2	1
25-79	1
25-80	2
25-81 - 25-87	1
25-88	2
25-89	1
25-90	2
25-91 - 25-93	1
25-94	2
25-95 - 25-117	1
25-118 Blank	1
26-1	0
26-2 - 26-4	2
26-5 - 25-9	0

*Zero in this column indicates original page.

LIST OF EFFECTIVE PAGES (Contd)

Page No.	*Change No.
26-10	2
27-1	0
27-2	2
27-3	1
27-4 - 27-6	2
27-7 - 27-9	0
27-10	2
27-11 - 27-13	0
27-14	2
25-15	0
27-16 - 27-22	2
27-23	0
27-24 - 27-31	2
27-32 - 27-33	0
27-34	2
27-35	0
27-36 - 27-37	2
27-38	1
27-39	0
27-40 Blank	0
28-1 - 28-2	1
28-3	0
28-4 - 28-5	2
28-6	1
28-7	0
28-8	1
28-9	0
28-10 - 28-11	2
28-12 - 28-13	0
28-14	2
28-15 - 28-16	0
28-17 - 28-18	1
28-19 - 29-25	0
28-26	1
28-26.1 - 28-26.2	1
28-27 - 28-30	1
28-30.1 - 28-30.2	1
28-31	1
28-32	2
28-33 - 28-34	1
28-35	2
28-36	1
28-37 - 28-46	2
28-47	0
28-48	2
28-49 - 28-55	0
28-56	1
28-57 - 28-58	2
28-58.1 - 28-58.2	2
28-59	1
28-60	2
28-61	0
28-62 - 28-64	2
28-65	0
28-66	2
28-67 - 28-69	0
28-70	2
28-71	0
28-72 - 28-73	2
28-74	0
28-75 - 28-79	1
28-80 - 28-82	0
28-83	2
28-84 - 28-85	0
28-86	1
28-86.1 - 28-86.2	1
28-87 - 28-88	1
28-89 - 28-90	2
28-91	0
28-92 Blank	0
29-1	0
29-2	2
29-3 - 29-6	0
29-7	2
29-8 - 29-9	0
29-10	2
29-11	0
29-12	2
29-13 - 29-17	0
29-18 - 29-21	2
29-22 - 29-23	0
29-24	2
29-24.1 Added	2
29-24.2 Blank Added	2
29-25	2
29-26	1
29-27	2
29-28 Blank	1
30-1 - 30-3	2
30-4 - 30-9	0
30-10	1
30-11 - 30-17	0
30-18	1
30-19	0
30-20	1
30-21	0
30-22	1
30-23 - 30-24	0
30-25	2
30-26 - 30-29 Added	2
30-30 Blank Added	2
31-1	2
31-2 Blank Added	2
31-3 - 31-19 Deleted	2
31-20 Blank Deleted	2
32-1	0
32-2	2
32-3	0
32-4	2
32-5 - 32-6	0
32-6.1 - 32-6.2 Added	2
32-7 - 32-13	2
32-14 Blank	0
33-1	0
33-2	2
33-3 - 33-4	1
33-5 - 33-16	0
33-17 - 33-18	1
33-19	2
33-20 - 33-38	1
33-39	2
33-40 - 33-67	1
33-68	2
33-69 - 33-87	1
33-88	2
33-89 - 33-109	1
33-110 Blank	1
34-1	2
34-2 - 34-3	1
34-4 Blank	0
A-1	0
A-2	2
B-1 - B-3	0
B-4 - B-17	2
B-18 - B-22	1
B-23	2
B-24	0
C-1	0
C-2	2
C-3	1
C-4	2
C-5 - C-10	1
D-1	0
D-2	2
D-3 - D-84	0
D-84.1 - D-84.6	1
D-85	2
D-86 - D-89 Added	2
D-90 Blank Added	2
E-1 - E-5	0
E-6 Blank	0
F-1 - F-2	0
G-1	0
G-2 - G-11	2
G-12 Blank Added	2
G-13 - G-15 Deleted	2

*Zero in this column indicates original page.

LIST OF EFFECTIVE PAGES (Contd)

Page No. .....*Change No.

G-16 Blank Deleted 2
H-1 1
H-2 0
H-3 1
H-4 Blank 0
Index 1 1
Index 2 - Index 54 2
FP-1 0
FP-2 Blank 0
FP-3 1
FP-4 Blank 0
FP-5 Added 1
FP-6 Blank Added 1

*Zero in this column indicates original page.

TECHNICAL MANUAL
NO. 9-2320-387-24-1

TECHNICAL ORDER
NO. 36A12-1A-3052-1

HEADQUARTERS
DEPARTMENTS OF THE ARMY AND THE AIR FORCE
WASHINGTON, D.C., *31 December 1997*

TECHNICAL MANUAL
VOLUME 1 OF 2

UNIT, DIRECT SUPPORT, AND GENERAL SUPPORT MAINTENANCE FOR

TRUCK, UTILITY: S250 SHELTER CARRIER, 4X4, M1113
(2320-01-412-0143) (EIC: B6B)

TRUCK, UTILITY: UP-ARMORED CARRIER, 4X4, M1114
(2320-01-413-3739) (EIC: B6C)

Approved for public release; distribution is unlimited.

REPORTING ERRORS AND RECOMMENDING IMPROVEMENTS

You can help improve this publication. If you find any mistakes or if you know of a way to improve the procedures, please let us know. Submit your DA Form 2028 (Recommended Changes to Publications and Blank Forms), through the Internet, on the Army Electronic Product Support (AEPS) website. The Internet address is http://aeps.ria.army.mil. If you need a password, scroll down and click on "ACCESS REQUEST FORM." The DA Form 2028 is located in the ONLINE FORMS PROCESSING section of the AEPS. Fill out the form and click on SUBMIT. Using this form on the AEPS will enable us to respond quicker to your comments and better manage the DA Form 2028 program. You may also mail, fax or E-mail your letter or DA Form 2028 direct to: AMSTA-LC-CI Tech Pubs, TACOM-RI, 1 Rock Island Arsenal, Rock Island, IL 61299-7630. The E-mail address is TACOM-TECH-PUBS@ria.army.mil. The fax number is DSN 793-0726 or Commercial (309) 782-0726.

This manual is published in two parts. TM 9-2320-387-24-1 contains chapters 1 through 9, and TM 9-2320-387-24-2 contains chapters 10 through 33 and appendices A through H.

This manual contains a table of contents and alphabetical index for both volumes 1 and 2.

VOLUME 1 OF 2

		Page
	HOW TO USE THIS MANUAL	vii
CHAPTER 1	INTRODUCTION	1-1
Section I.	General Information	1-1
II.	Equipment Description and Data	1-2
III.	Principles of Operation	1-23
CHAPTER 2	SERVICE AND TROUBLESHOOTING (UNIT) INSTRUCTIONS	2-1
Section I.	Repair Parts, Special Tools, Test, Measurement, Diagnostic Equipment (TMDE), and Support Equipment	2-1
II.	Service Upon Receipt	2-1
III.	Preventive Maintenance Checks and Services (PMCS)	2-2
IV.	General Maintenance Instructions	2-30
V.	Electrical/Mechanical Systems Troubleshooting	2-33
CHAPTER 3	ENGINE SYSTEMS (UNIT) MAINTENANCE	3-1
Section I.	Lubrication System Maintenance	3-1
II.	Fuel System Maintenance	3-21
III.	Accelerator System Maintenance	3-81
IV.	Exhaust System Maintenance	3-90
V.	Cooling System Maintenance	3-109
CHAPTER 4	ELECTRICAL SYSTEM (UNIT) MAINTENANCE	4-1
Section I.	Generating and Protective Control Box System Maintenance	4-1
II.	Starter and Starting Control System Maintenance	4-20
III.	Instruments, Sending Units, Switches, and Horn Maintenance	4-29
IV.	Transfer Case and Transmission Electrical Maintenance	4-65
V.	Lighting System Maintenance	4-81
VI.	Battery System Maintenance	4-107

Page

CHAPTER 5 TRANSMISSION AND TRANSFER CASE (UNIT) MAINTENANCE 5-1
Section I. Transmission Maintenance 5-1
II. Transfer Case Maintenance 5-31

CHAPTER 6 PROPELLER SHAFTS, AXLES, AND SUSPENSION (UNIT) MAINTENANCE 6-1
Section I. Propeller Shafts Maintenance 6-1
II. Front and Rear Axles Maintenance 6-12
III. Suspension Maintenance 6-48

CHAPTER 7 BRAKE SYSTEM (UNIT) MAINTENANCE 7-1
I. Service Brake System Maintenance 7-1
II. Rear Dual Service/Parking Brake System Maintenance 7-37

CHAPTER 8 WHEELS AND STEERING (UNIT) MAINTENANCE 8-1
Section I. Wheel and Runflat System Maintenance 8-1
II. Steering Components Maintenance 8-35

CHAPTER 9 FRAME (UNIT) MAINTENANCE 9-1

VOLUME 2 OF 2

		Page
CHAPTER 10	BODY AND ACCESSORIES (UNIT) MAINTENANCE	10-1
Section I.	Body Maintenance	10-1
II.	Body Accessories Maintenance	10-100
CHAPTER 11	SPECIAL PURPOSE BODIES (UNIT) MAINTENANCE	11-1
Section I.	Weapon Carrier Body Maintenance	11-1
II.	Shelter Carrier Body Maintenance	11-139
III.	Air Conditioning Maintenance	11-151
IV.	Rear Cargo Door Access	11-165
CHAPTER 12	SPECIAL PURPOSE KITS (UNIT) MAINTENANCE	12-1
Section I.	Engine/Crew Compartment Heater Maintenance	12-1
II.	Communications Kits Maintenance	12-25
III.	Winch Kit Maintenance	12-49
CHAPTER 13	PREPARATION FOR STORAGE OR SHIPMENT	13-1
Section I.	General Instructions	13-1
II.	Preparation for Storage and Shipment	13-2
CHAPTER 14	TROUBLESHOOTING (DS)/(GS)	14-1
Section I.	Mechanical Troubleshooting	14-2
II.	Air Conditioning Troubleshooting	14-15
CHAPTER 15	ENGINE (DS) MAINTENANCE	15-1
Section I.	General Engine Maintenance	15-1
II.	Engine Replacement	15-47
CHAPTER 16	FUEL SYSTEM (DS) MAINTENANCE	16-1
CHAPTER 17	COOLING SYSTEM (DS) MAINTENANCE	17-1

Page

CHAPTER 18 ELECTRICAL SYSTEM (DS) MAINTENANCE 18-1

CHAPTER 19 TRANSMISSION (DS) MAINTENANCE 19-1

CHAPTER 20 TRANSFER CASE (DS) MAINTENANCE 20-1

CHAPTER 21 PROPELLER SHAFTS, AXLES, AND SUSPENSION (DS) MAINTENANCE 21-1

CHAPTER 22 SERVICE BRAKE SYSTEM (DS) MAINTENANCE 22-1

CHAPTER 23 STEERING SYSTEM (DS) MAINTENANCE 23-1

CHAPTER 24 FRAME (DS) MAINTENANCE 24-1

CHAPTER 25 SPECIAL PURPOSE BODIES (DS) MAINTENANCE 25-1

Section I. Armament Carrier Maintenance 25-1

II. Air Conditioning Maintenance 25-37

CHAPTER 26 SPECIAL PURPOSE KITS (DS) MAINTENANCE 26-1

CHAPTER 27 ELECTRICAL SYSTEM (GS) REPAIR 27-1

CHAPTER 28 TRANSMISSION (GS) REPAIR 28-1

Page

CHAPTER 29 TRANSFER CASE (GS) REPAIR 29-1

CHAPTER 30 DIFFERENTIAL (GS) REPAIR 30-1

CHAPTER 31 STEERING SYSTEM (GS) REPAIR 31-1

CHAPTER 32 FRAME (GS) REPAIR 32-1

CHAPTER 33 BODY (GS) REPAIR 33-1

CHAPTER 34 SUSPENSION (GS) MAINTENANCE 34-1

APPENDIX A REFERENCES A-1
APPENDIX B MAINTENANCE ALLOCATION CHART B-1
APPENDIX C EXPENDABLE/DURABLE SUPPLIES AND MATERIALS LIST C-1
APPENDIX D ILLUSTRATED LIST OF MANUFACTURED ITEMS D-1
APPENDIX E TORQUE LIMITS E-1
APPENDIX F BODY REPAIR MATERIALS. F-1
APPENDIX G MANDATORY REPLACEMENT PARTS G-1
APPENDIX H WIRING DIAGRAMS AND SCHEMATICS. H-1
INDEX . . . . . INDEX 1

HOW TO USE THIS MANUAL

ABOUT YOUR MANUAL

a. Spend some time looking through this manual. You'll find that it has a new look, different than most of the TMs you've been using. New features added to improve the convenience of this manual and increase your efficiency are:

1. **Accessing Information** – These include physical entry features such as the bleed-to-edge indicators on the cover and edge of the manual. Extensive troubleshooting guides for specific systems lead directly to step-by-step directions for problem solving and maintenance tasks.
2. **Illustrations** – A variety of methods are used to make locating and fixing components much easier. Locator illustrations with keyed text, exploded views, and cut-away diagrams make the information in this manual easier to understand.
3. **Keying Text With Illustrations** – Instructions are located together with figures that illustrate the specific task you are working on. In most cases, the task steps and figures are located side-by-side, making part identification and procedure sequence easier to follow.

The TM is the fundamental means by which the Army communicates to soldiers the requirements and procedures necessary to perform equipment operations and maintenance. This manual describes in detail the Unit, Direct and General Support Maintenance authorized by the Maintenance Allocation Chart (MAC) (appendix B) and Source, Maintenance, and Recovery (SMR) codes (TM 9-2320-387-24P).

b. **General Features.** Your TM is the best source available for providing information and data critical to vehicle operation and maintenance:

Volume 1

- Safety summary (warning pages a, b, and c)
- General information, equipment descriptions, and data (chapter 1)
- Principles of operation (chapter 1, section III)
- Preventive Maintenance Checks and Services – PMCS (chapter 2, section III)
- General maintenance instructions (chapter 2, section IV)
- Electrical/mechanical systems troubleshooting (chapter 2, section V)
- Detailed maintenance procedures (chapters 3 through 9)

Volume 2

- Safety summary (warning pages a through d)
- Troubleshooting (chapter 14, section I)
- Detailed maintenance procedures (chapters 10 through 33)
- Maintenance Allocation Chart – MAC (appendix B)
- Expendable/durable supplies and materials list (appendix C)
- Illustrated list of manufactured items (appendix D)
- Torque limits (appendix E)
- Body repair materials (appendix F)
- Mandatory replacement parts (appendix G)
- Wiring diagrams and schematics (appendix H)

A typical example of how to use this manual is provided on the following pages.

USING YOUR MANUAL: AN EXAMPLE

a. **TASK:** The operator of an ECV vehicle has complained that his carrier uses too much engine oil. The vehicle has been assigned to you for repair.

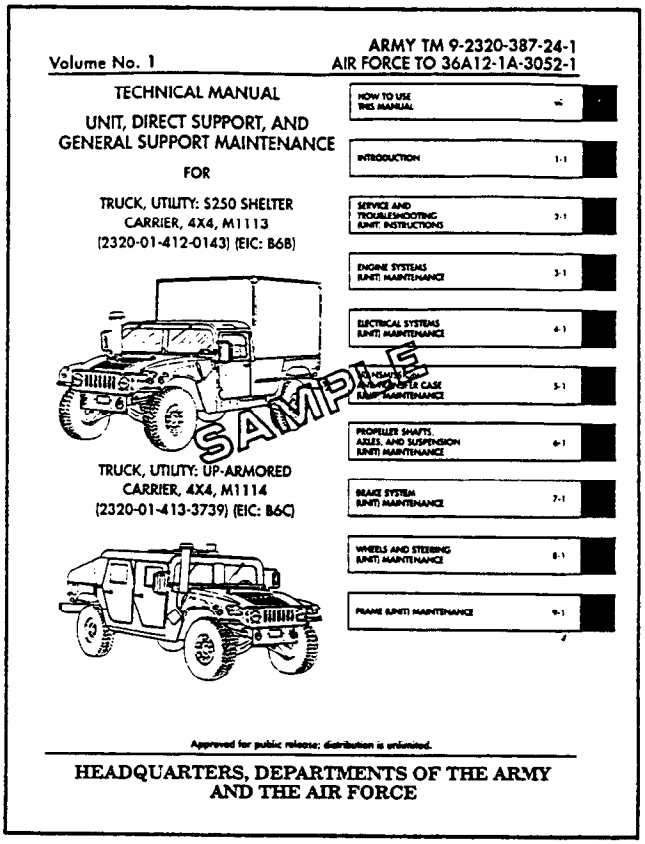
Volume No. 1

ARMY TM 9-2320-387-24-1
AIR FORCE TO 36A12-1A-3052-1

TECHNICAL MANUAL

UNIT, DIRECT SUPPORT, AND GENERAL SUPPORT MAINTENANCE

FOR

TRUCK, UTILITY: S250 SHELTER CARRIER, 4X4, M1113 (2320-01-412-0143) (EIC: B6B)

TRUCK, UTILITY: UP-ARMORED CARRIER, 4X4, M1114 (2320-01-413-3739) (EIC: B6C)

HOW TO USE THIS MANUAL
INTRODUCTION 1-1
SERVICE AND TROUBLESHOOTING (UNIT) INSTRUCTIONS 2-1
ENGINE SYSTEMS (UNIT) MAINTENANCE 3-1
ELECTRICAL SYSTEMS (UNIT) MAINTENANCE 4-1
TRANSMISSION AND TRANSFER CASE (UNIT) MAINTENANCE 5-1
PROPELLER SHAFTS, AXLES, AND SUSPENSION (UNIT) MAINTENANCE 6-1
BRAKE SYSTEM (UNIT) MAINTENANCE 7-1
WHEELS AND STEERING (UNIT) MAINTENANCE 8-1
FRAME (UNIT) MAINTENANCE 9-1

Approved for public release; distribution is unlimited.

HEADQUARTERS, DEPARTMENTS OF THE ARMY AND THE AIR FORCE

b. **TROUBLESHOOTING STEPS:**

1. Look at the cover of this manual. You'll see chapter titles listed from top to bottom on the right-hand side.

2. Look at the right edge of the manual. On some of the pages you'll see black bars (bleed-to-edge indicators) that are aligned with the chapter bars on the cover. These are the locations of the chapters in the text.

3. Look for SERVICE AND TROUBLESHOOTING INSTRUCTIONS in the chapter list on the cover. This is where the troubleshooting information is located.

4. Turn to those pages with the edge indicator matching the black bar for service and troubleshooting instructions. Page numbers are also listed next to chapter titles.

5. Chapter 2 is divided into five sections:
   - Section I – Repair Parts, Special Tools, TMDE, and Support Equipment
   - Section II – Service Upon Receipt
   - Section III – PMCS
   - Section IV – General Maintenance Instructions
   - Section V – Electrical/Mechanical Systems Troubleshooting

2-16. REPAIR (Cont'd)

c. **Bearings.** See TM 9-214.

d. **Studs.** Replace all bent and stretched studs. Repair minor thread damage with a thread restorer file. Replace studs having stripped or damaged threads as outlined below.

(1) Remove, using a stud remover. Back studs out slowly to avoid heat buildup and seizure which can cause stud to break off.

(2) If studs break off too short to use a stud remover, use extractor to remove.

(3) Replacement studs have a special coating and must have a small amount of antiseize compound (appendix C, item 13), applied on threads before stud is installed. Install replacement stud slowly to prevent heat buildup and snapping off.

e. **Gears.**

(1) Remove gears using pullers, as required.

(2) Use the same methods described in para. 2-16.b (2) for castings to remove minor nicks, burrs, or scratches on gear teeth.

(3) If keyways are worn or enlarged, replace gear.

f. **Bushings and Bushing-Type Bearings.** When bushings and bushing-type bearings seize to a shaft and spin in the bore, the associated part must also be inspected and replaced, as required.

g. **Oil Seals.**

(1) Remove oil seals, being careful not to damage casting or adapter bore.

(2) Always install new seal in bore using proper seal replacement.

2-17. ASSEMBLY

a. Cleanliness is essential in all component assembly operations. Dirt and dust, even in minute quantities, are abrasive. Parts must be cleaned as specified and kept clean. Wrap or cover parts and components when assembly procedures are not immediately completed.

b. Coat all bearings and contact surfaces with operating oil (differential oil for differential parts, transmission oil for transmission parts, etc.) to ensure lubrication of parts during initial operation after repair.

Section V. ELECTRICAL/MECHANICAL SYSTEMS TROUBLESHOOTING

2-18. GENERAL

a. This section provides information to diagnose and correct malfunctions of the electrical/mechanical system.

b. Principles of operation showing system operation can be found in chapter 1. It should be used as a reference when performing electrical/mechanical troubleshooting.

c. Each malfunction symptom given for an individual component or system is followed by step(s) you should take to determine the cause and corrective action you must take to remedy the problem.

d. Before taking any action to correct a possible malfunction, the following rules should be followed:

(1) Question operator to obtain any information that might help you determine the cause of the problem.

(2) Never overlook the chance that the problem could be of simple origin. The problem could be corrected with minor adjustment.

(3) Use all senses to observe and locate troubles.

2-19. ELECTRICAL/MECHANICAL SYSTEMS TROUBLESHOOTING

ELECTRICAL/MECHANICAL TROUBLESHOOTING

PARA NO.		PAGE NO.
2-20.	How to use this troubleshooting guide	2-36
2-21.	Glossary of abbreviations and commonly used terms	2-42
2-22.	Electrical circuit description	2-43
2-23.	Startability tests	2-45
2-24.	Engine running tests	2-51
2-25.	Cooling system tests	2-61
2-26.	Lubrication system tests	2-69
2-27.	Electrical tests	2-75
2-28.	Fuel system tests	2-99
2-29.	Air intake/exhaust tests	2-141
2-30.	Compression/mechanical tests	2-147
2-31.	Engine cooling tests	2-159
2-32.	Engine lubrication tests	2-191
2-33.	Alternator tests	2-199
2-34.	Protective control box tests	2-213
2-35.	Battery circuit test	2-237
2-36.	Starter circuit tests	2-247
2-37.	Glow plugs circuit tests	2-289
2-38.	Instruments tests	2-305
2-39.	Lights tests	2-375
2-40.	Transmission system tests	2-385
2-41.	Brake system tests	2-419
2-42.	Steering system tests	2-433
2-43.	Drivetrain tests	2-453
2-44.	Winch system tests	2-471
2-45.	DCA troubleshooting	2-479
2-46	STE/ICE-R test procedures	2-489
2-47.	Vehicle testing	2-517

6. Turn to section V, ELECTRICAL/ MECHANICAL SYSTEMS TROUBLE-SHOOTING (page 2-33).
   This troubleshooting section is system-oriented and is broken down into five top level tests and nineteen system level tests.

7. One of the first pages of this section is the ELECTRICAL/MECHANICAL SYSTEM TROUBLESHOOTING (turn to page 2-35).

8. Look down the list of symptoms until you find ENGINE LUBRICATION TESTS. In that paragraph you will find the diagnostic flow chart from which the vehicle operator can choose the test such as OIL LEAKS OR ENGINE PROBLEMS.

9. Turn to the test indicated.

10. On page 2-192, steps relating to resolving the problem of excessive oil loss are listed. Read the diagnostic flow chart until you find OIL LEAKS OR ENGINE PROBLEMS. The tests listed are shown in the example page to the right of this text.

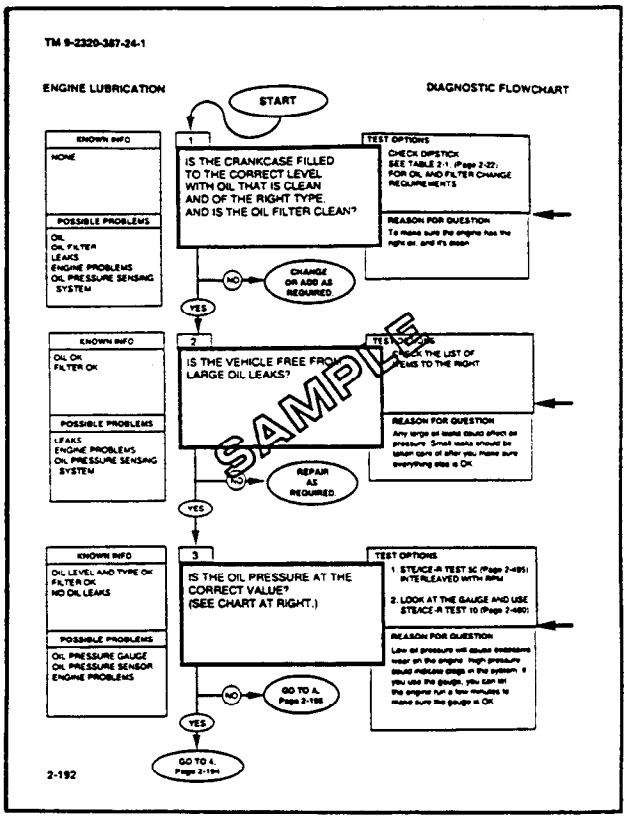

11. In accordance with Test 1, you checked the oil level and filter for leaks. The oil level and filter appears normal and you move on to Test 2.

12. In Test 2, you begin a methodic check of the engine lubricating system. You discover a leak in the oil cooler assembly adjacent to one of the mounting brackets. One of the welds has cracked, allowing a class III leak from a small area of the cooling fins. The oil cooler assembly must be repaired or replaced.

13. At this point, the engine lubrication diagnostic flow chart would direct you to a specific detailed procedure to solve the problem. However, the engine lubricating system is complex and you must now refer to the table of contents to locate the proper task paragraph.

NOTE: Before attempting to repair or replace the oil cooler assembly, as a Unit mechanic, you must:

a. Determine the maintenance responsibility of repair or replacement of the component.

b. If the task is at your echelon of maintenance responsibility, you must identify the tools needed and the replacement parts required.

Refer to the Maintenance Allocation Chart – MAC (appendix B) to determine not only the maintenance responsibility of the item, but also to obtain an estimate of the time required to perform the task, tools needed, and any special notes/requirements necessary.

Refer to TM 9-2320-387-24P, Unit, Direct Support and General Support Maintenance Repair Parts and Special Tools List for requisition data concerning replacement parts for this task.

c. **OIL COOLER ASSEMBLY REPLACEMENT:** After reporting the results of your troubleshooting efforts to your supervisor, he decides that the most expedient means of returning the vehicle to service would be to replace the oil cooler assembly.

1. Turn to the TABLE OF CONTENTS and find the chapter dealing with the engine. You find it as CHAPTER 3, ENGINE SYSTEMS (UNIT) MAINTENANCE. Furthermore, you note that the chapter is divided into five sections. You are interested in Section I. Lubrication System Maintenance.

2. Turn to chapter 3, section I on page 3-1. Here you find the Lubrication System Maintenance Task Summary. Read down the list of tasks until you find the one that will correct your maintenance problem. For our example, you find it as task 3-8, Engine, Transmission, and Power Steering Oil Cooler Assembly Maintenance. Turn to page 3-12.

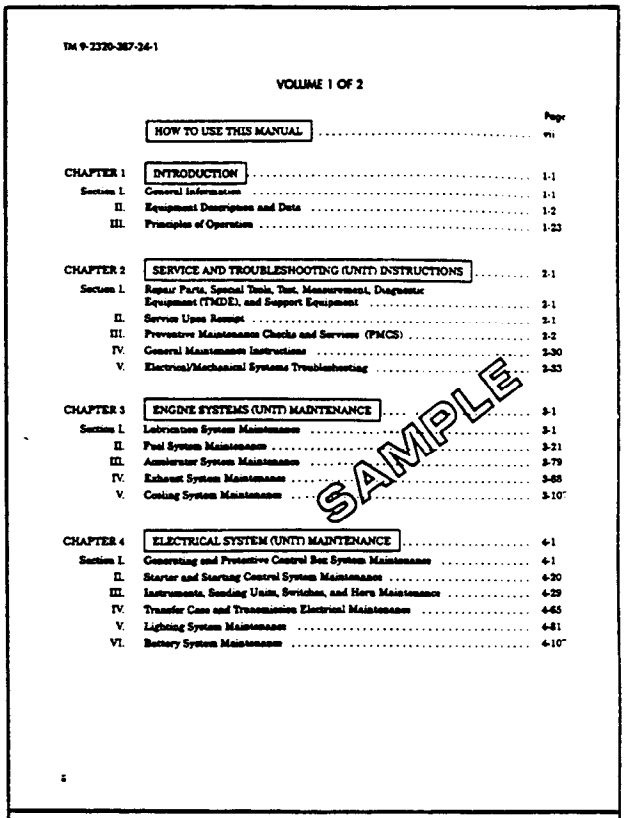

TM 9-2320-387-24-1

VOLUME 1 OF 2

		Page
	HOW TO USE THIS MANUAL	vii
CHAPTER 1	INTRODUCTION	1-1
Section I.	General Information	1-1
II.	Equipment Descriptions and Data	1-2
III.	Principles of Operation	1-23
CHAPTER 2	SERVICE AND TROUBLESHOOTING (UNIT) INSTRUCTIONS	2-1
Section I.	Repair Parts, Special Tools, Test, Measurement, Diagnostic Equipment (TMDE), and Support Equipment	2-1
II.	Service Upon Receipt	2-1
III.	Preventive Maintenance Checks and Services (PMCS)	2-2
IV.	General Maintenance Instructions	2-30
V.	Electrical/Mechanical Systems Troubleshooting	2-33
CHAPTER 3	ENGINE SYSTEMS (UNIT) MAINTENANCE	3-1
Section I.	Lubrication System Maintenance	3-1
II.	Fuel System Maintenance	3-21
III.	Accelerator System Maintenance	3-79
IV.	Exhaust System Maintenance	3-85
V.	Cooling System Maintenance	3-107
CHAPTER 4	ELECTRICAL SYSTEM (UNIT) MAINTENANCE	4-1
Section I.	Generating and Protective Control Box System Maintenance	4-1
II.	Starter and Starting Control System Maintenance	4-20
III.	Instruments, Sending Units, Switches, and Horn Maintenance	4-29
IV.	Transfer Case and Transmission Electrical Maintenance	4-65
V.	Lighting System Maintenance	4-81
VI.	Battery System Maintenance	4-107

SAMPLE

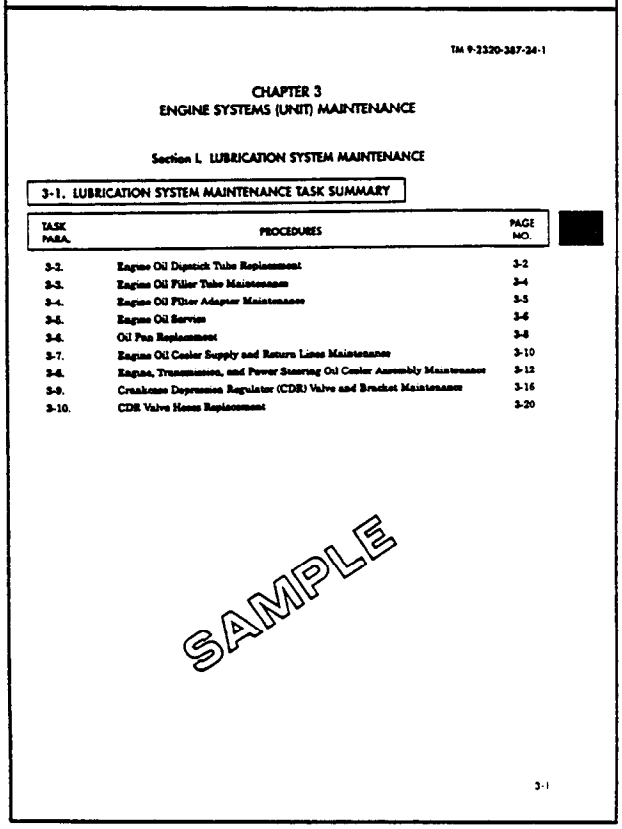

TM 9-2320-387-24-1

CHAPTER 3
ENGINE SYSTEMS (UNIT) MAINTENANCE

Section I. LUBRICATION SYSTEM MAINTENANCE

3-1. LUBRICATION SYSTEM MAINTENANCE TASK SUMMARY

TASK PARA.	PROCEDURES	PAGE NO.
3-2.	Engine Oil Dipstick Tube Replacement	3-2
3-3.	Engine Oil Filler Tube Maintenance	3-4
3-4.	Engine Oil Filter Adapter Maintenance	3-5
3-5.	Engine Oil Service	3-6
3-6.	Oil Pan Replacement	3-8
3-7.	Engine Oil Cooler Supply and Return Lines Maintenance	3-10
3-8.	Engine, Transmission, and Power Steering Oil Cooler Assembly Maintenance	3-12
3-9.	Crankcase Depression Regulator (CDR) Valve and Bracket Maintenance	3-16
3-10.	CDR Valve Hoses Replacement	3-20

SAMPLE

3-1

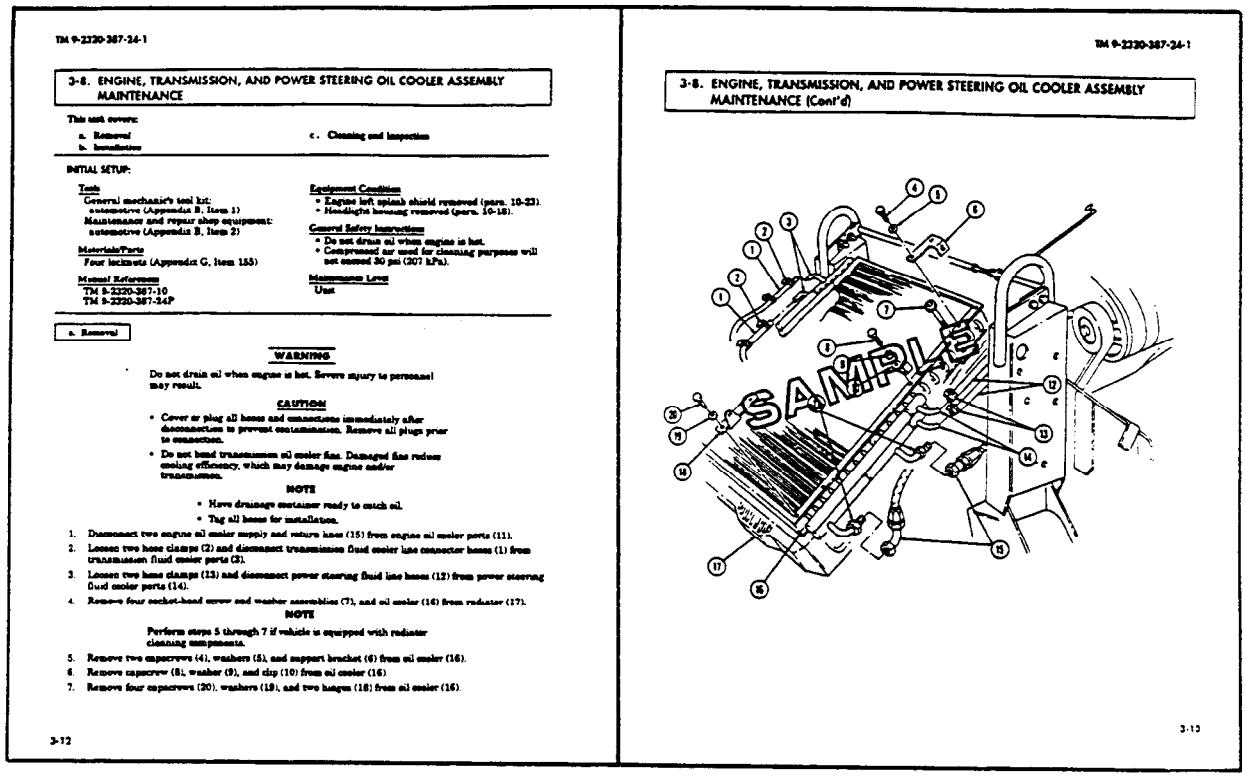

TM 9-2320-387-24-1

3-8. ENGINE, TRANSMISSION, AND POWER STEERING OIL COOLER ASSEMBLY MAINTENANCE

This task covers:

a. Removal
b. Installation
c. Cleaning and Inspection

INITIAL SETUP:

Tools
General mechanic's tool kit: automotive (Appendix B, Item 1)
Maintenance and repair shop equipment: automotive (Appendix B, Item 2)

Materials/Parts
Four lockwasher (Appendix G, Item 155)

Manual References
TM 9-2320-387-10
TM 9-2320-387-24P

Equipment Condition
- Engine left splash shield removed (para. 10-23).
- Headlight housing removed (para. 10-18).

General Safety Instructions
- Do not drain oil when engine is hot.
- Compressed air used for cleaning purposes will not exceed 30 psi (207 kPa).

Maintenance Level
Unit

a. Removal

WARNING

Do not drain oil when engine is hot. Severe injury to personnel may result.

CAUTION

- Cover or plug all hoses and connections immediately after disconnection to prevent contamination. Remove all plugs prior to connection.
- Do not bend transmission oil cooler fins. Damaged fins reduce cooling efficiency, which may damage engine and/or transmission.

NOTE

- Have drainage container ready to catch oil.
- Tag all hoses for installation.

1. Disconnect two engine oil cooler supply and return hoses (15) from engine oil cooler ports (11).
2. Loosen two hose clamps (2) and disconnect transmission fluid cooler line connector hoses (1) from transmission fluid cooler ports (3).
3. Loosen two hose clamps (13) and disconnect power steering fluid line hoses (12) from power steering fluid cooler ports (14).
4. Remove four socket-head screw and washer assemblies (7), and oil cooler (16) from radiator (17).

NOTE

Perform steps 5 through 7 if vehicle is equipped with radiator cleaning components.

5. Remove two capscrews (4), washers (5), and support bracket (6) from oil cooler (16).
6. Remove capscrew (8), washer (9), and clip (10) from oil cooler (16).
7. Remove four capscrews (20), washers (19), and two hangers (18) from oil cooler (16).

3-12

TM 9-2320-387-24-1

3-8. ENGINE, TRANSMISSION, AND POWER STEERING OIL COOLER ASSEMBLY MAINTENANCE (Cont'd)

3-13

3. On page 3-12, you find paragraph 3-8 with the detailed procedure for replacing the oil cooler assembly.

d. **DETAILED MAINTENANCE PROCEDURES:** Detailed maintenance procedures include everything you must do to accomplish a basic maintenance task. Unless otherwise stated, general mechanic's automotive tool kit will be used for maintenance of this vehicle.

1. Before beginning the maintenance task, look through the procedure. You must familiarize yourself with the entire maintenance procedure of para. 3-8: Engine, Transmission, and Power Steering Oil Cooler Assembly Maintenance. The task includes a. Removal, b. Installation, and c. Cleaning and Inspection.

2. The ten basic headings listed under INITIAL SETUP outline task conditions, materials, special tools, manpower requirements, and special conditions. The headings are:

- **Applicable Models:** Any models that require a particular maintenance task. If a maintenance task covers all models, then this heading will not be used.
- **Test Equipment:** Test equipment needed to complete a task. If test equipment is not required, this heading will not be used.
- **Tools:** These are common tools and general mechanic tool sets required to perform maintenance tasks. These common tools should be on hand to properly perform the task. Torque wrenches are required for many tasks; the proper torque wrench should be available to tighten mounting hardware.
- **Special Tools:** Those special tools needed to complete a maintenance task. If no special tools are needed, this heading will not be used.

  If you don't have one of these special tools, requisition it (before starting the task) using the data supplied in TM 9-2320-387-24P, the repair parts and special tools list for this level of maintenance. Special tools are located in section III.
- **Materials/Parts:** This heading lists only mandatory replacement materials or parts (gaskets, O-rings, sealant, etc.). To replace other unservicable parts, refer to TM 9-2320-387-24P for requisition data. If no mandatory replacement materials/parts are required, this heading will not be used.

- **Personnel Required:** The number of personnel needed to perform a task. If only one mechanic is needed, this heading will not be used.

NOTE

If you think that you need more help to adequately or safely complete a task, perhaps as the result of unusual conditions, etc., alert your supervisor and ask for help.

- **Manual References:** Those TMs needed to complete the task.
- **Equipment Condition:** Notes the conditions that must exist before starting the task. If none are required, this heading will not be used. For oil cooler assembly replacement, the left-hand engine splash shield should be removed before we can start the task. If not already done, follow the procedure for splash shield removal in para. 10-23 before proceeding with this task.
- **General Safety Instructions:** Summarizes all safety warnings for the maintenance task. If none are required, this heading will not be used.
- **Maintenance Level:** Identifies maintenance level required to perform task.

3. A step-by-step maintenance procedure follows the INITIAL SETUP and gives detailed instructions for the procedure. These instructions give the part's general location and name and action performed. In the example Engine, Transmission, and Power Steering Oil Cooler Assembly Replacement, a. Removal, step 1 is "Disconnect two engine oil cooler supply and return lines (7) from engine oil cooler ports (9)." Note that the numbers in parentheses correspond to the part's callout number in the accompanying illustration.

NOTE

Warnings, cautions, and notes provide supplemental information:

- **Warnings:** Indicate conditions, practices, or procedures which must be observed to avoid personnel injury, loss of life, or long-term health hazard.
- **Cautions:** Indicate condition, practices, or procedures which must be observed to avoid damage to equipment or destruction of equipment.
- **Notes:** Include essential information of special importance, interest, or aid in job performance, which should be remembered and would be otherwise difficult to find or incorporate into the text.

4. At the end of a procedure, FOLLOW-ON TASKS will list those additional tasks that must be performed to complete the procedure. The follow-on tasks for engine, transmission, and power steering oil cooler assembly replacement are:
   - Fill power steering fluid to proper level (TM 9-2320-387-10).
   - Fill transmission oil to proper level (TM 9-2320-387-10).
   - Fill engine oil to proper level (TM 9-2320-387-10).
   - Install headlight housing (para. 10-18).
   - Install left-hand splash shield (para. 10-23).
   - Start engine (TM 9-2320-387-10) and check for leaks.

e. Refer to the example pages for para. 3-8, Engine, Transmission, and Power Steering Oil Cooler Assembly Maintenance as we review the following points:

1. **Modular Text:** Both pages of text and illustrations are to be used together. This manual was designed so the two pages would be visible at once, making part identification and procedure sequence easy to follow.
2. **Initial Setup:** Outlines task conditions.
3. **Illustrations:** An exploded diagram of the component shows part locations, attachments, and spatial relationships. Cutaway views (part of the vehicle is erased) show the location and orientation of screws and attachments.

f. Your manual is easy to use once you understand its design. We hope it will encourage you to use your TM more often as an aid to maintenance support.

CHAPTER 1
INTRODUCTION

Section I. GENERAL INFORMATION

1-1. SCOPE

a. This technical manual contains instructions for unit, direct, and general support maintenance of the 4x4, M1113 and M1114 vehicles.

b. Models included are:

(1) M1113, S250 Shelter Carrier

(2) M1114, Up-Armored

1-2. MAINTENANCE FORMS, RECORDS, AND REPORTS

Department of the Army forms and procedures used for equipment maintenance will be those prescribed by DA Pam 738-750, The Army Maintenance Management System (TAMMS).

1-3. DESTRUCTION OF ARMY EQUIPMENT TO PREVENT ENEMY USE

Refer to TM 750-244-6, Procedures for Destruction of Army Tank-automotive Equipment to Prevent Enemy Use.

1-4. PREPARATION FOR SHIPMENT

Refer to TM 746-10, Marking, Packaging, and Shipment of Supplies and Equipment: General Packaging Instructions for Field Use.

1-5. REPORTING EQUIPMENT IMPROVEMENT RECOMMENDATIONS (EIR)

If your vehicle needs improvement, let us know. Send us an EIR. You, the user, are the only one who can tell us what you don't like about your equipment. Let us know why you don't like the design or performance. The preferred method for submitting QDRs is through the Army Electronic Product Support (AEPS) website under the Electronic Deficiency Reporting System (EDRS). The web address is: https://aeps.ria.army.mil. This is a secured site requiring a password that can be applied for on the front page of the website. If the above method is not available to you, put it on an SF 368, Product Quality Deficiency Report (PQDR), and mail it to us at: Department of the Army, U.S. Army Tank-automotive and Armaments Command, ATTN: AMSTA-TR-E/PQDR MS 267, 6501 E. 11 Mile Road, Warren, MI 48397-5000. We'll send you a reply. (Marine Corps) Submit QDR's in accordance with MCO 4855-10.

1-6. EQUIPMENT IMPROVEMENT REPORT AND MAINTENANCE DIGEST (EIR MD)

The quarterly Equipment Improvement Report and Maintenance Digest, TB 43-0001-62 series, contains valuable field information on the equipment covered in this manual. The information in the TB 43-0001-62 series is compiled from some of the Equipment Improvement Reports that you prepared on the vehicles covered in this manual. Many of these articles result from comments, suggestions, and improvement recommendations that you submitted to the EIR program. The TB 43-0001-62 series contains information on equipment improvements, minor alterations, proposed Modification Work Orders (MWOs), warranties (if applicable), actions taken on some of your DA Form 2028s (Recommended Changes to Publications and Blank Forms), and advance information on proposed changes that may affect this manual. The information will help you in doing your job better and will help in keeping you advised of the latest changes to this manual. Also refer to DA Pam 25-30, Consolidated Index of Army Publications and Blank Forms, and appendix A, References, of this manual.

1-7. METRIC SYSTEM

The equipment described herein contains metric components and requires metric common and special tools; therefore, metric units in addition to standard units will be used throughout this publication.
In addition, a metric conversion table is located on the inside back cover of this publication.

1-8. MANDATORY REPLACEMENT PARTS

The maintenance instructions contained herein make reference to removing and discarding piece parts such as: gaskets, lockwashers, cotter pins, O-rings, seals, etc.; these items should be considered mandatory replacement items and replaced with new parts during assembly/installation.

1-9. BREAK-IN PROCEDURE

Upon receipt of vehicles, or after engine replacement, break-in procedures must be observed during the first 500 miles (804 kilometers) of operation. For break-in procedure, refer to TM 9-2320-387-10.

Section II. EQUIPMENT DESCRIPTION AND DATA

1-10. EQUIPMENT CHARACTERISTICS, CAPABILITIES, AND FEATURES

The 4x4, M1113 and M1114 vehicles are tactical vehicles designed for use over all types of roads, as well as cross-country terrain, in all weather conditions. The vehicles have four driving wheels powered by a V-8, liquid-cooled, turbocharged diesel engine. Four-wheel hydraulic service brakes and a mechanical parking brake are common to all models. M1113 and M1114 vehicles are equipped with a pintle hook for towing. Tiedown and lifting eyes are provided for air, rail, or sea shipment.

1-10. EQUIPMENT CHARACTERISTICS, CAPABILITIES, AND FEATURES (Cont'd)

UP-ARMORED CARRIER, W/SUPPLEMENTAL ARMOR: M1114

PURPOSE: This model is used to transport, mount, and operate the M2 and M60 machine guns and MK19 automatic grenade launcher with armor protection for crew, weapons components, and ammunition. The M1114 model may have a optional rear winch which can be used for recovery operations.

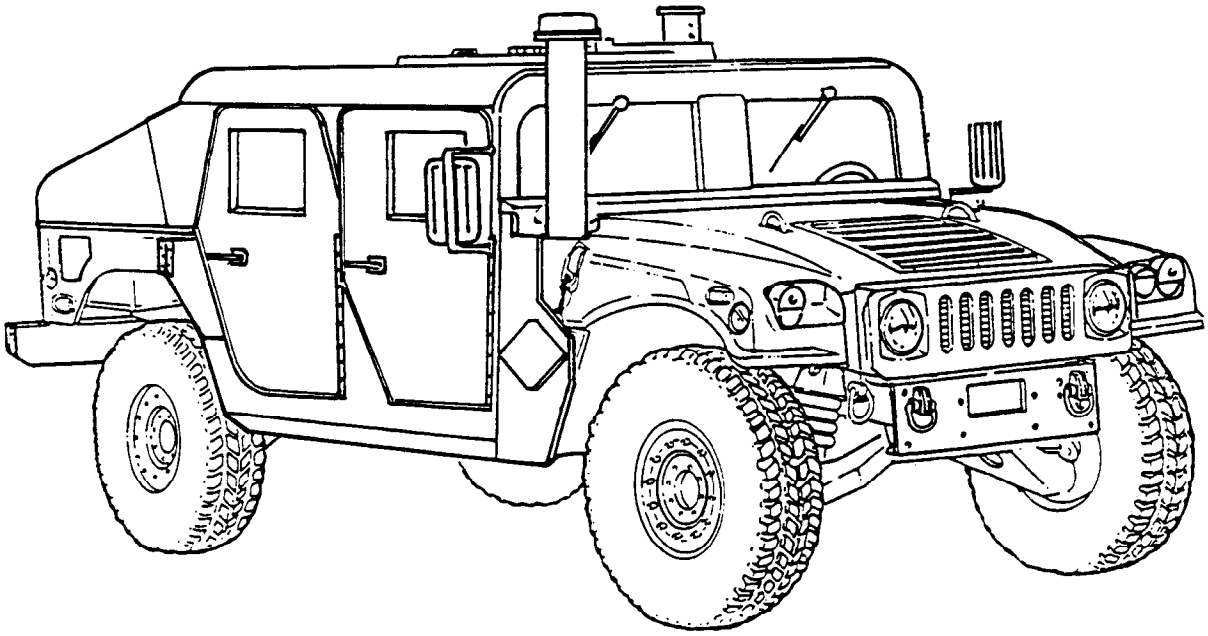

M1114

1-10. EQUIPMENT CHARACTERISTICS, CAPABILITIES, AND FEATURES (Cont'd)

S250 SHELTER CARRIER: M1113

PURPOSE: This model is used for securing and transporting the S250 electrical equipment shelter. The M1113 model may have a optional front winch which can be used for recovery operations.

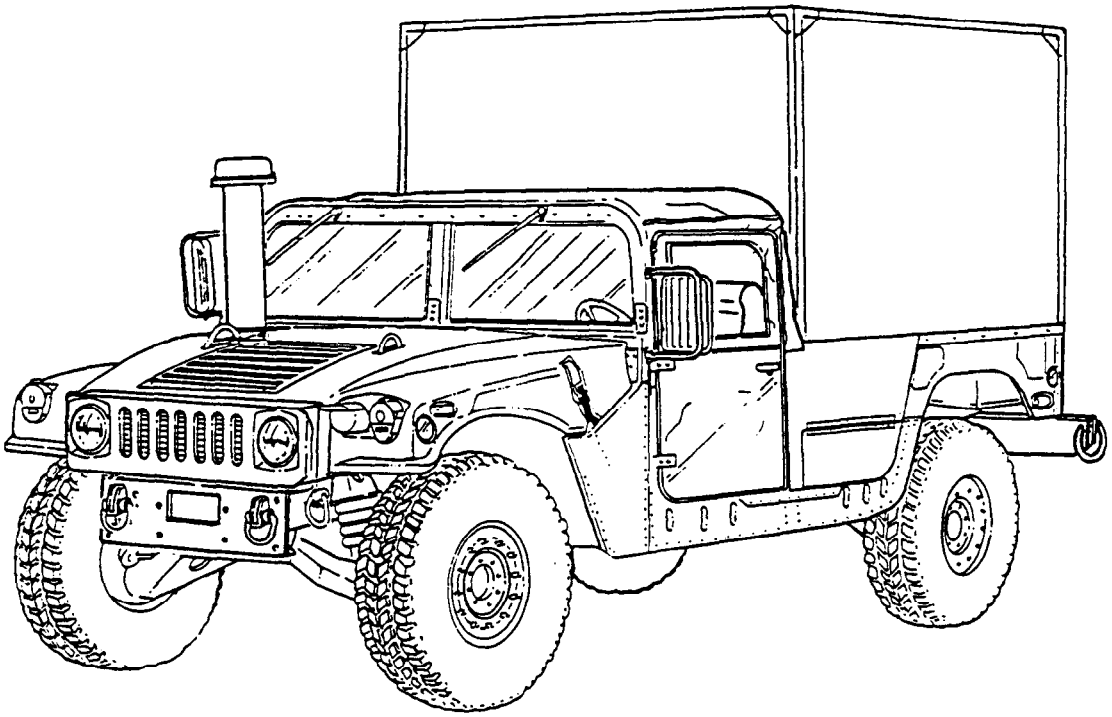

M1113

1-11. LOCATION AND DESCRIPTION OF MAJOR EXTERIOR COMPONENTS

The exterior components described below are common to all vehicles covered in this manual. Special differences are found in TM 9-2320-387-10 or table 1-1, Differences Between Models, in this manual.

(A) **AIR CLEANER** – Filters air before it enters intake manifold.

(B) **ENGINE** – Provides power for the vehicle.

(C) **TRANSMISSION** – Transmits engine power to transfer case at varying speeds.

(D) **FUEL TANK** – Stores fuel.

(E) **GEARED HUB** – Transfers turning action of halfshafts to wheels for vehicle motion.

(F) **PINTLE HOOK** – Permits towing of vehicles or equipment.

(G) **REAR PROPELLER SHAFT** – Transmits power from the transfer case to the rear differential.

(H) **TRANSFER CASE** – Provides full-time four-wheel drive with three drive ranges.

(I) **FRONT PROPELLER SHAFT** – Transmits power from the transfer case to the front differential.

(J) **MASTER CYLINDER AND HYDRO-BOOSTER** – Provides hydraulic pressure and power assist for vehicle stopping power.

(K) **DIFFERENTIAL** – Transfers turning action of the propeller shaft to the geared hubs through the halfshafts.

(L) **WINCH** – 9,000 lb electrically powered to provide recovery capability. Located in front of vehicle on M1113 models (if equipped) and rear of vehicle on M1114 models (if equipped).

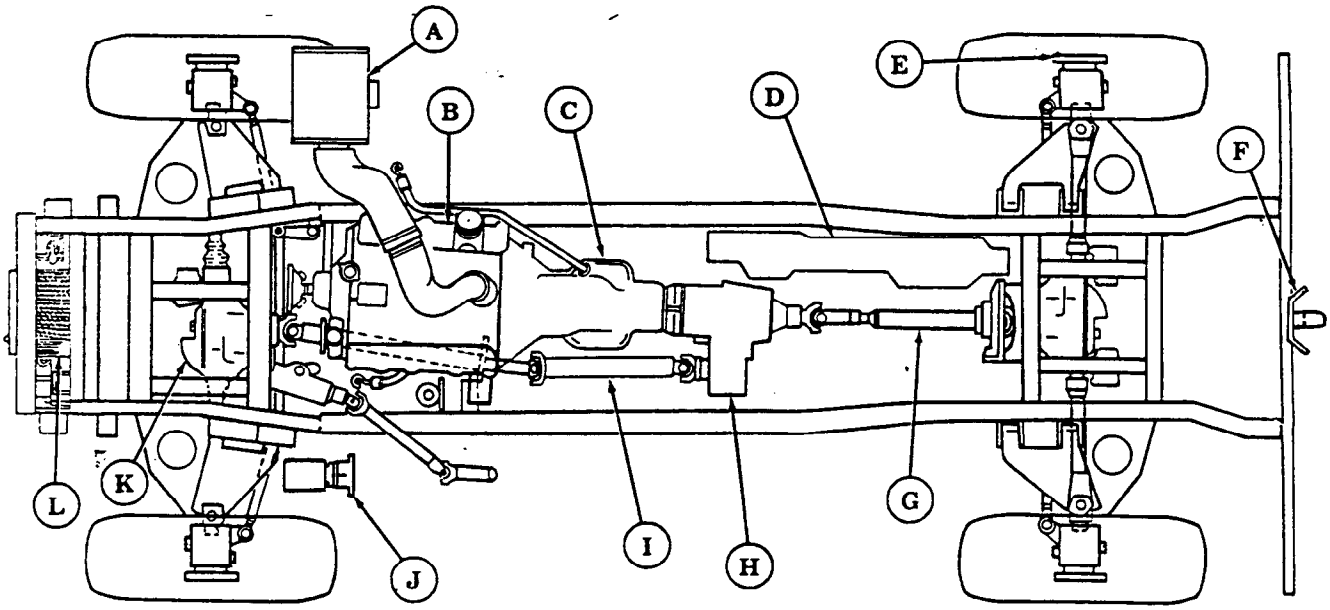

1-12. LOCATION AND DESCRIPTION OF MAJOR INTERIOR COMPONENTS

The major interior components shown below are common to all vehicles covered in this manual. Components not covered here can be found in TM 9-2320-387-10 or the applicable maintenance chapters of this manual.

(A) **DIRECTIONAL SIGNAL CONTROL** – Activates turn signal lights.

(B) **AIR RESTRICTION GAUGE** – Indicates restrictions in the air cleaner.

(C) **STEERING WHEEL** – Manual control for turning vehicle.

(D) **INSTRUMENT CLUSTER** – Houses controls and indicators.

(E) **DIAGNOSTIC CONNECTOR** – Connection point for STE/ICE-R test set.

(F) **TRANSMISSION SHIFT LEVER** – Manual control for shifting transmission.

(G) **TRANSFER CASE SHIFT LEVER** – Manual control for shifting transfer case.

(H) **PARKING BRAKE LEVER** – Manual control for applying parking brake.

(I) **ACCELERATOR PEDAL** – Foot control for determining engine speed.

(J) **BRAKE PEDAL** – Foot control for stopping vehicle.

(K) **MAIN LIGHT SWITCH** – Controls operation of vehicle lights.

(L) **ROTARY SWITCH** – When positioned to START, the starter is engaged to crank the engine.

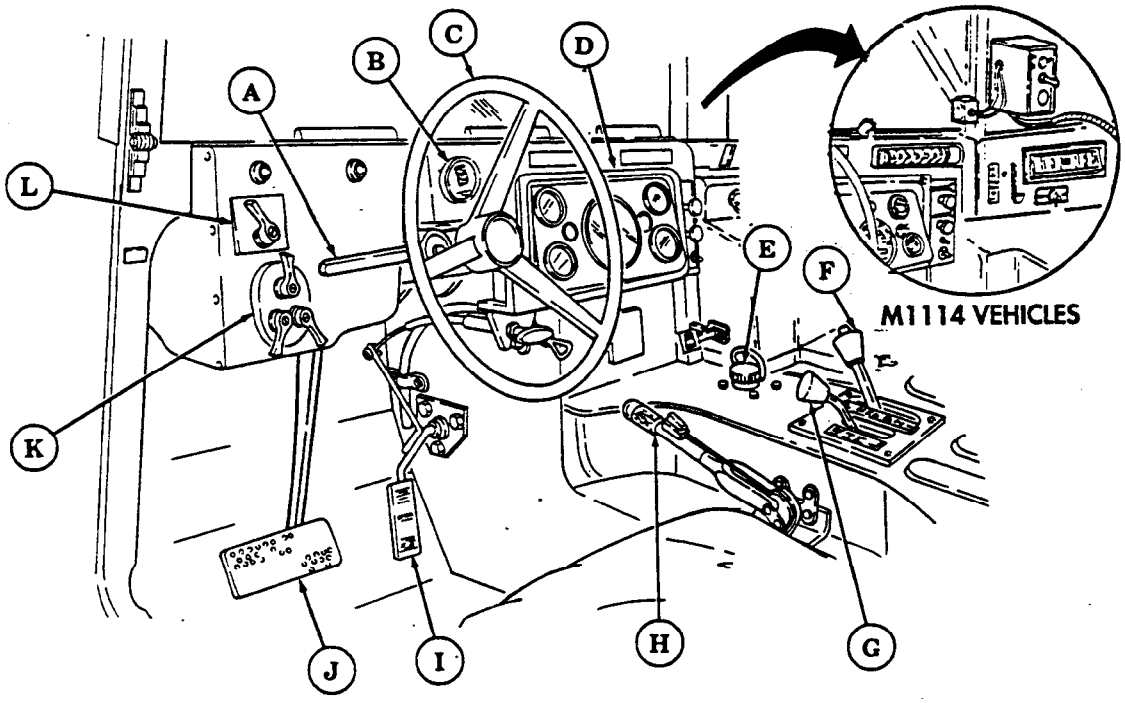

1-12. LOCATION AND DESCRIPTION OF MAJOR INTERIOR COMPONENTS (Cont'd)

1. P (Park)
2. R (Reverse)
3. N (Neutral)
4. D (Overdrive)
5. D (Manual Third)
6. 2 (Manual Second)
7. 1 (Manual First)

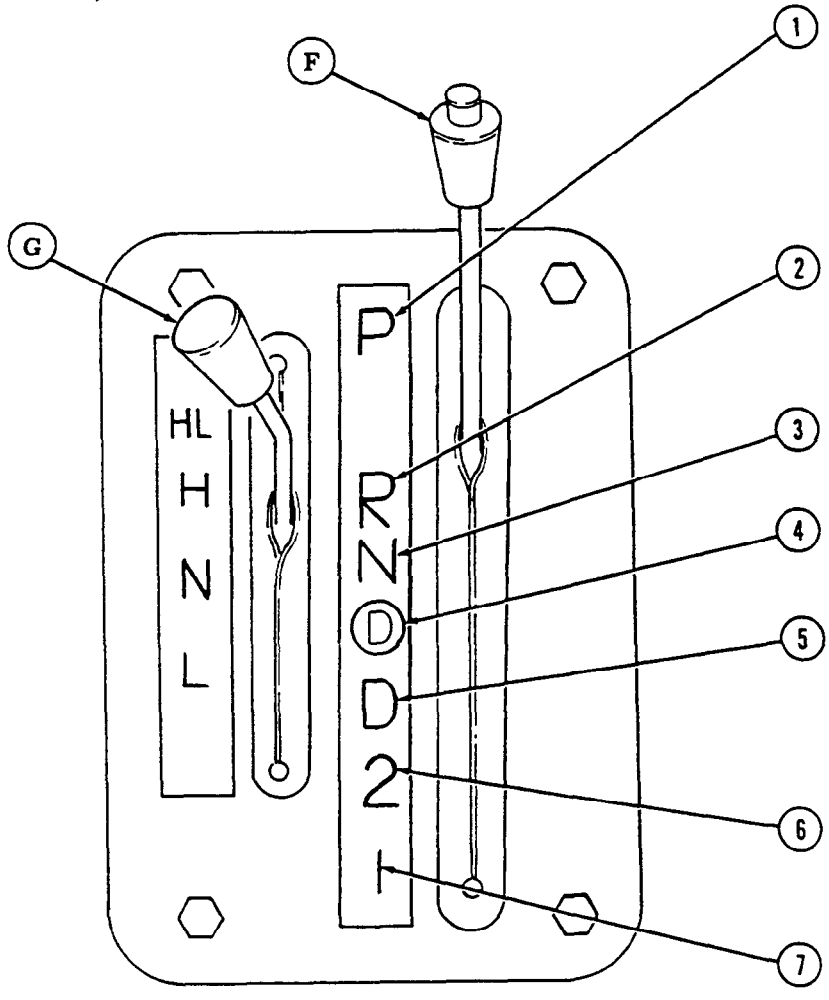

1-13. LOCATION AND CONTENTS OF WARNING, CAUTION, AND DATA PLATES

The location and contents of caution, data, and warning plates are provided in this paragraph. If any of these plates are worn, broken, painted over, missing, or unreadable, they must be replaced. Information on data plate may vary with the model.

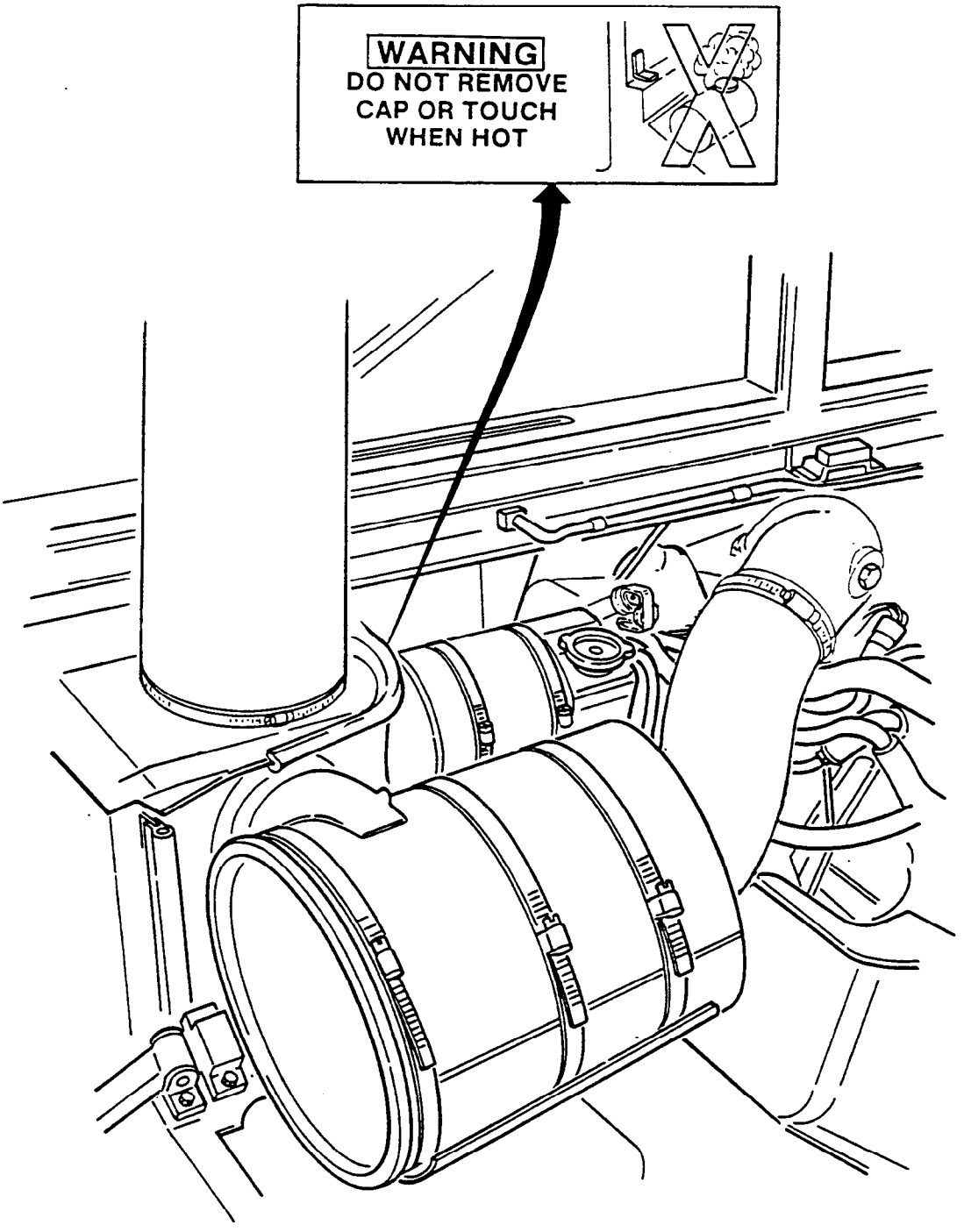

1-13. LOCATION AND CONTENTS OF WARNING, CAUTION, AND DATA PLATES (Cont'd)

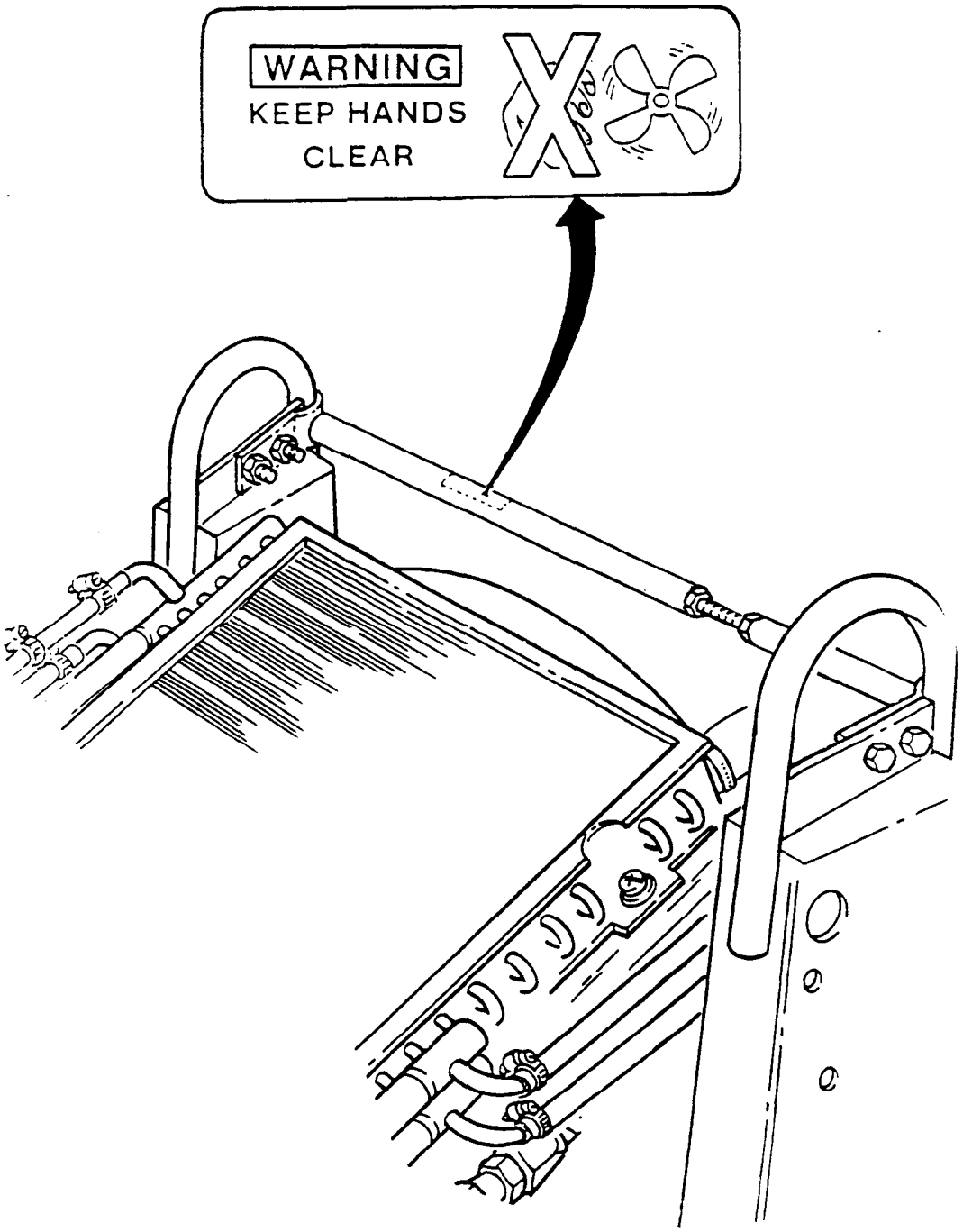

1-13. LOCATION AND CONTENTS OF WARNING, CAUTION, AND DATA PLATES (Cont'd)

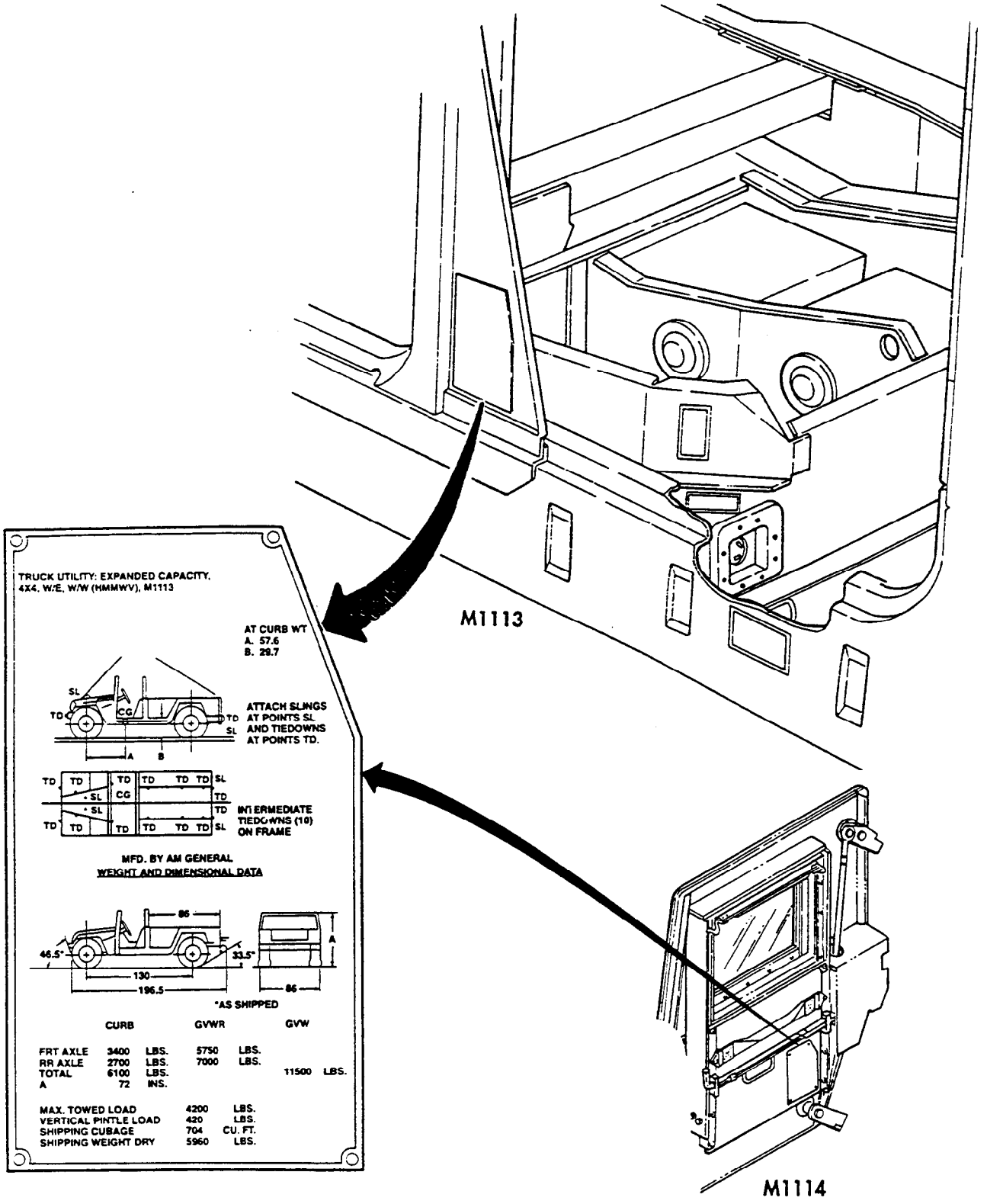

1-13. LOCATION AND CONTENTS OF WARNING, CAUTION, AND DATA PLATES (Cont'd)

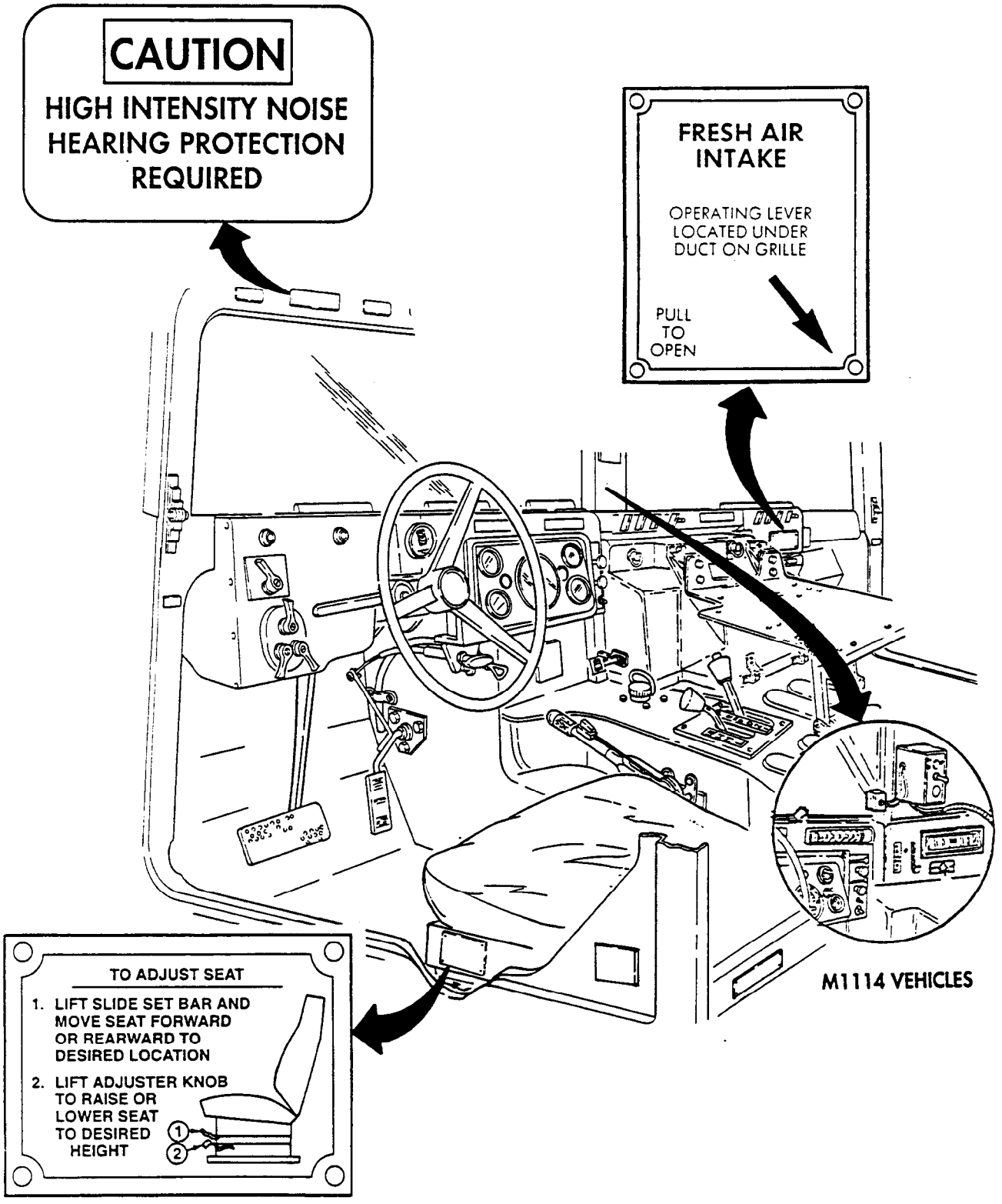

1-13. LOCATION AND CONTENTS OF WARNING, CAUTION, AND DATA PLATES (Cont'd)

MAX. VEHICLE OPERATING SPEEDS

TRANSFER RANGE SELECTION	TRANSFER CASE RANGE SELECTION "L" Low Lock	"H" High	"H/L" High Lock
"R" Reverse	10 MPH	27 MPH	27 MPH
(D) Overdrive	28 MPH	55 MPH	55 MPH
"D" Drive	21 MPH	55 MPH	55 MPH
"2" Second	14 MPH	38 MPH	38 MPH
"I" First	8 MPH	23 MPH	23 MPH

TRANSFER CASE IN HIGH "H" WHEN OPERATING ON HARD SURFACE

FORDING
SHALLOW FORDING DEPTH
30 INCHES

VEHICLE BREAK-IN SERVICE

DURING THE FIRST 500 MI. (804 KM) OF OPERATION:

- **DO NOT EXCEED A SPEED OF 55 MPH (88 KPH)**
- **DO NOT DRIVE FOR LONG PERIODS OF TIME AT CONSTANT SPEED**
- **AVOID RAPID ACCELERATION OR DECELERATION**
- **DRIVE AT MODERATE SPEED UNTIL THE ENGINE IS FULLY WARMED UP**
- **NO TRAILER TOWING**

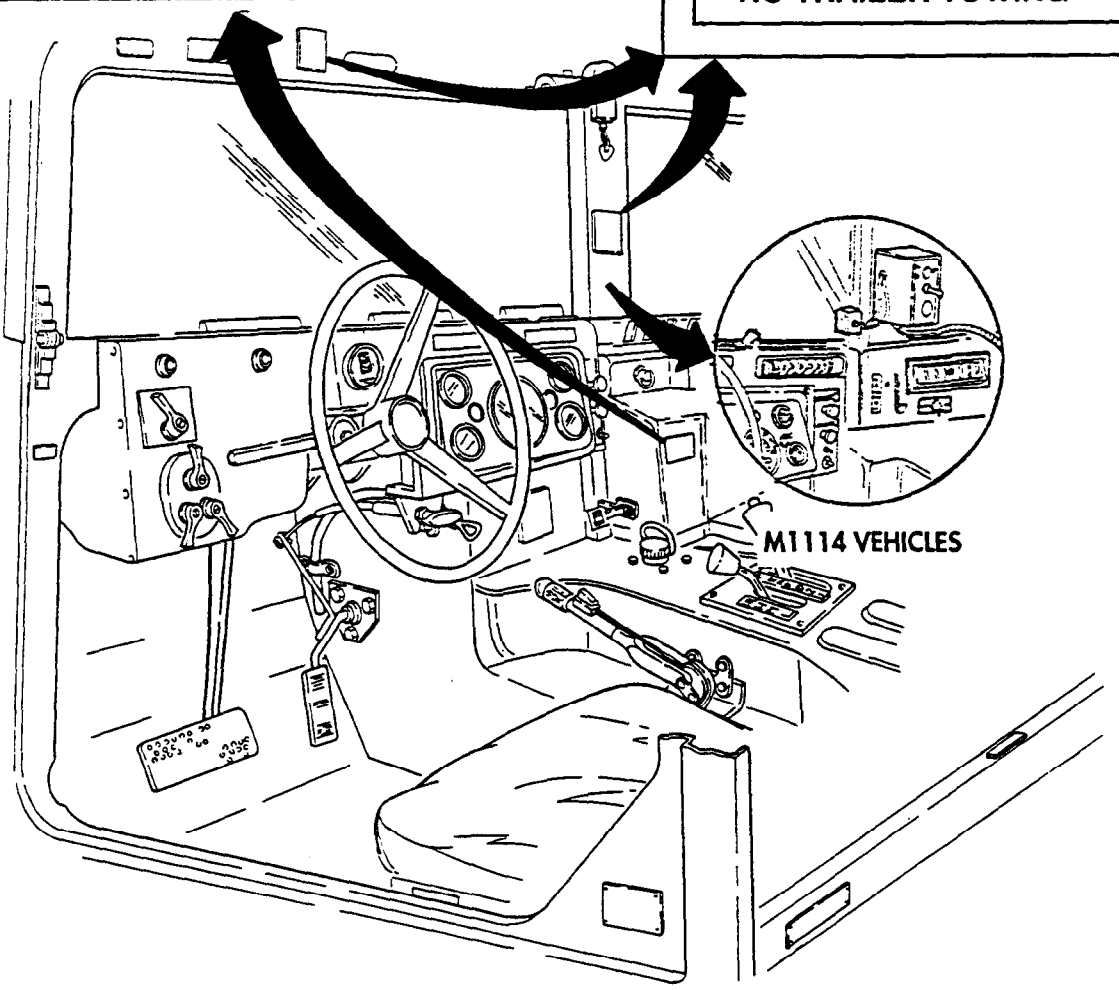

1-13. LOCATION AND CONTENTS OF WARNING, CAUTION, AND DATA PLATES (Cont'd)

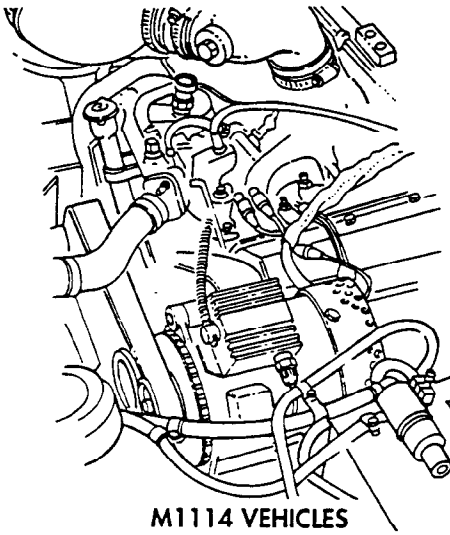

M1114 VEHICLES

TRUCK UTILITY: UP-ARMORED HEAVY VARIANT
12100 GVW, 4X4 WE 1114

19207/87T0015	—	MFR O'GARA HESS & EISENHARDT
MFR'S. SERIAL NUMBER	—	
REGISTRATION NUMBER	—	
NATIONAL STOCK NUMBER	—	2320-01-413-3739
VEHICLE CURB WEIGHT	—	9800 LBS
PAYLOAD MAXIMUM	—	2300 LBS
GROSS WEIGHT MAXIMUM	—	12100 LBS
DATE OF DELIVERY	—	
CONTRACT NUMBER	—	DAAE07-94CO4106

U.S. PROPERTY

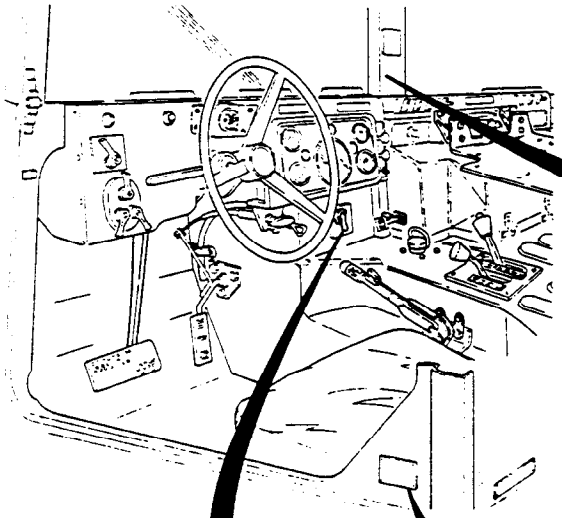

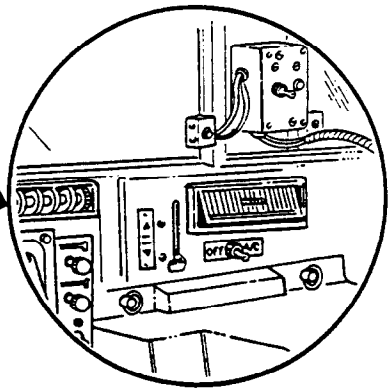

M1114 VEHICLES

VENT

DEEP FORD

TRUCK UTILITY: EXPANDED CAPACITY
4X4, W/E, HMMWV, XM 1113

19207/87T0014	—	MFR A.M.GENERAL
MFR'S. SERIAL NUMBER	—	
REGISTRATION NUMBER	—	
NATIONAL STOCK NUMBER	—	2320-01-412-0143
VEHICLE CURB WEIGHT	—	6100 LBS
PAYLOAD MAXIMUM	—	5400 LBS
GROSS WEIGHT MAXIMUM	—	11500 LBS
DATE OF DELIVERY	—	
CONTRACT NUMBER	—	WA-X001-96-0045

U.S. PROPERTY

M1113 VEHICLES

1-13. LOCATION AND CONTENTS OF WARNING, CAUTION, AND DATA PLATES (Cont'd)

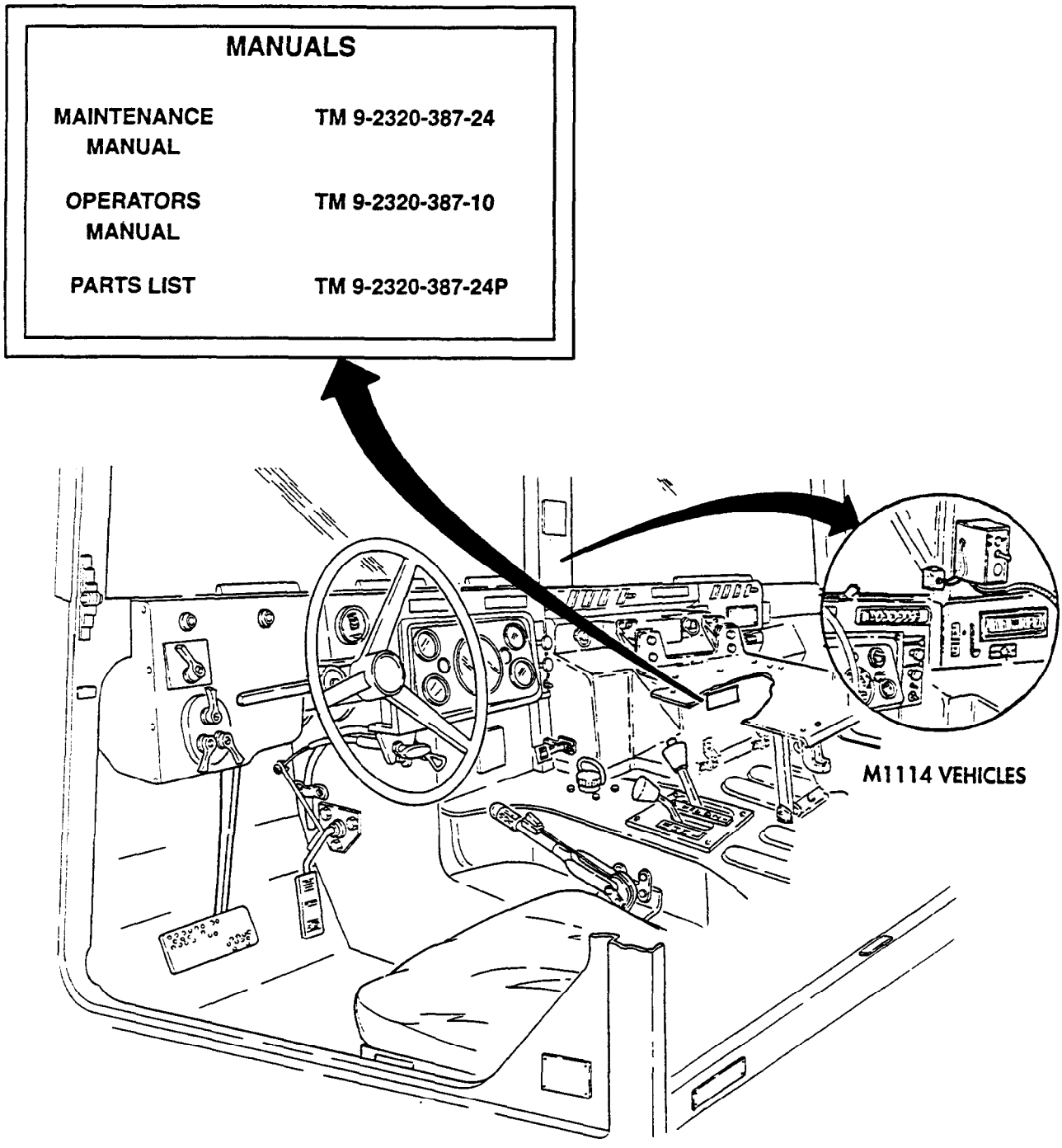

1-13. LOCATION AND CONTENTS OF WARNING, CAUTION, AND DATA PLATES (Cont'd)

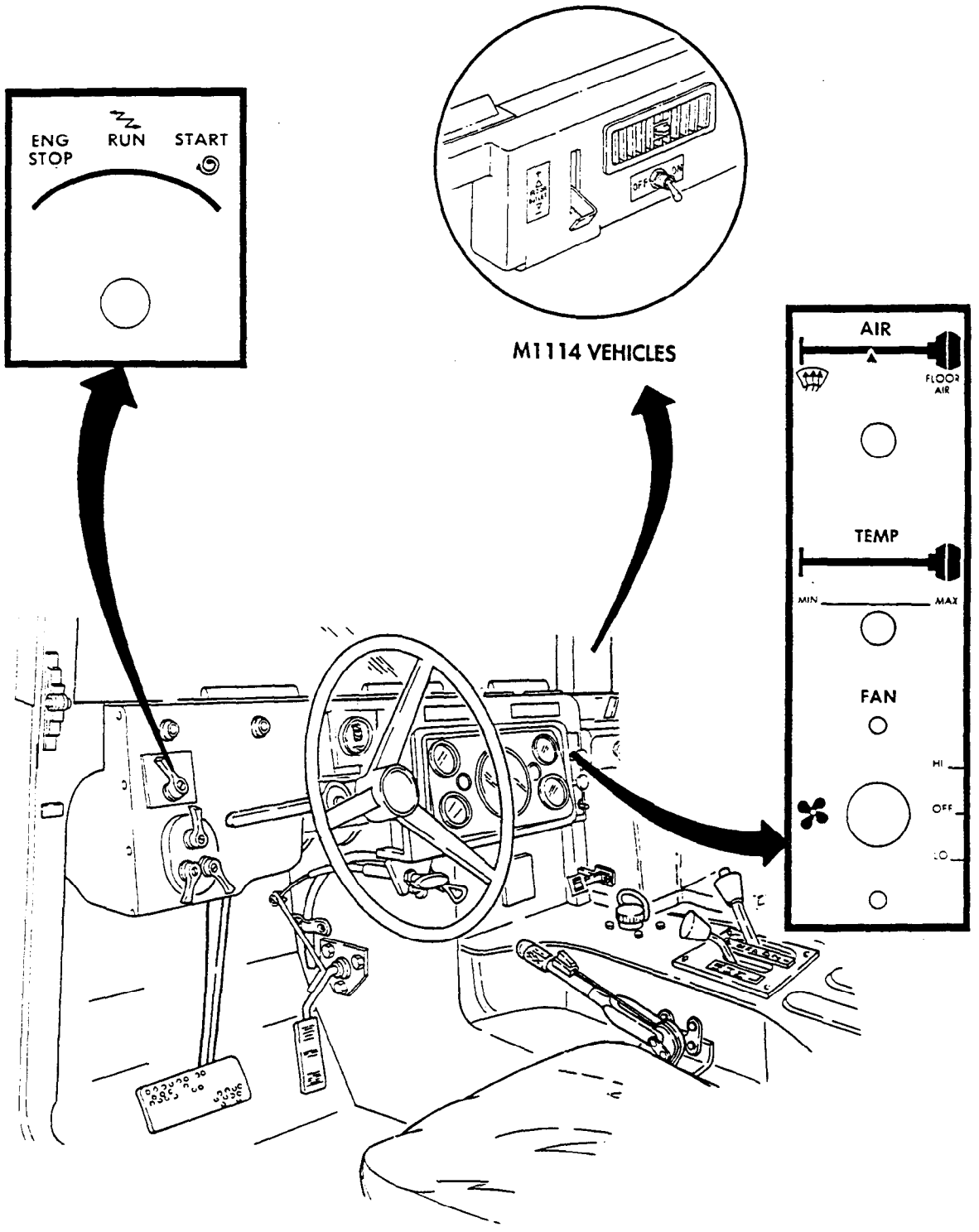

1-13. LOCATION AND CONTENTS OF WARNING, CAUTION, AND DATA PLATES (Cont'd)

WARNING

DO NOT USE HAND THROTTLE AS AN AUTOMATIC VEHICLE SPEED OR CRUISE CONTROL. THE HAND THROTTLE WILL NOT DISENGAGE AUTOMATICALLY WHEN BRAKE IS APPLIED.

WARNING

SEAT BELT HAS NON-LOCKING RETRACTORS. FOR PROPER USE, WEBBING MUST FIRST BE COMPLETELY EXTENDED FROM THE NON-LOCKING RETRACTOR DEVICE. ALL EXCESS WEBBING MUST THEN BE ADJUSTED AT THE BUCKLE.

STEERING WHEEL LOCKING DEVICE LOCATED UNDER INSTRUMENT PANEL

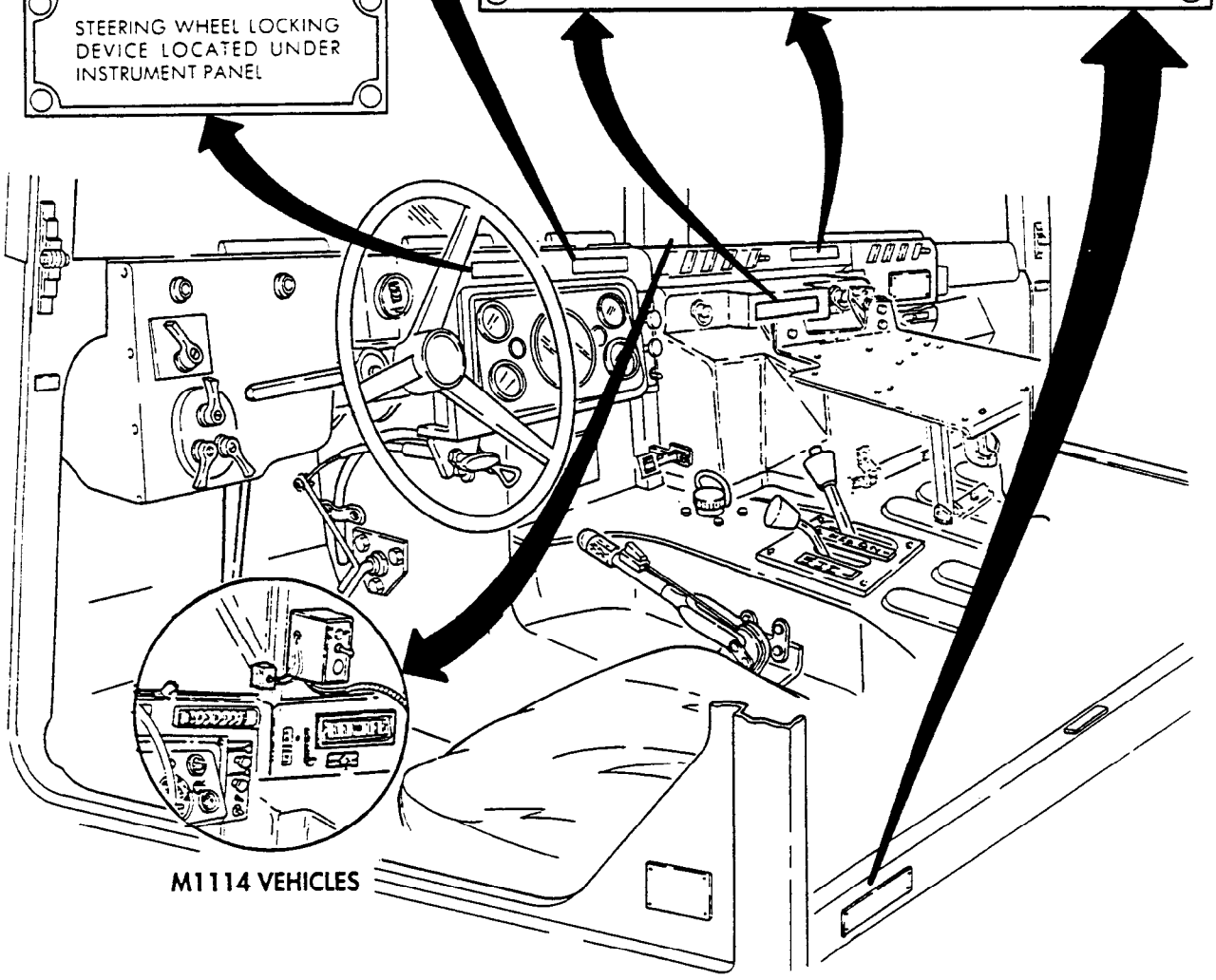

M1114 VEHICLES

1-13. LOCATION AND CONTENTS OF WARNING, CAUTION, AND DATA PLATES (Cont'd)

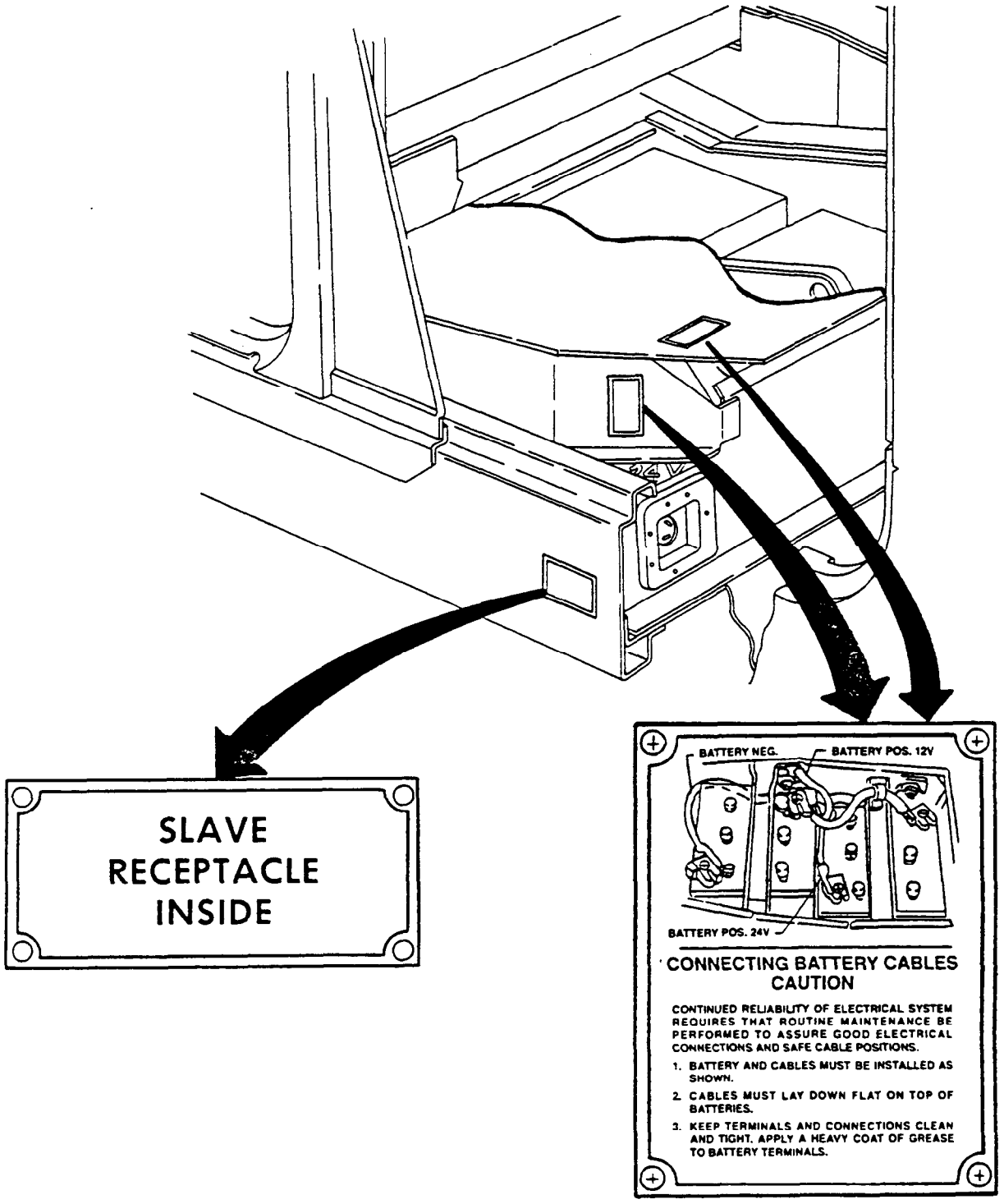

1-14. DIFFERENCES BETWEEN MODELS

The differences between models are provided in this paragraph.

Table 1-1. Differences Between Models.

Equipment/ Function	M1113	M1114
Armament Mounting		x
S250 Shelter Configuration	x	
Vehicle Winch (if equipped)	x	x
Supplemental Armor		x

1-15. TABULATED DATA

Vehicle performance data for the ECV vehicles is listed in table 1-2. Information not covered can be found in TM-9-2320-387-10.

Table 1-2. Tabulated Data.

NOTE

Standard and metric measurements will be used in this table.
A list of their abbreviations is provided below.

TABULATED DATA ABBREVIATIONS

MEASUREMENT	ABBREVIATION	MEASUREMENT	ABBREVIATION
Ampere	A	Liters Per Minute	L/m
Celsius	C	Maximum	max
Centimeter	cm	Miles Per Gallon	mpg
Fahrenheit	F	Miles Per Hour	mph
Gallon	gal.	Millimeter	mm
Gallons Per Minute	gpm	Minimum	min
Horsepower	hp	Newton-Meter	N•m
Inch	in.	Pint	pt
Kilogram	kg	Pound	lb
Kilometers Per Hour	kph	Pound-Feet	lb-ft
Kilometers Per Liter	km/L	Pounds Per Square Inch	psi
KiloPascal	kPa	Quart	qt
KiloWatt	kW	Revolutions Per Minute	rpm
Liters	L	Volt	V

	STANDARD	METRIC
1. PAYLOAD		
M1113	5,400 lb	2,450 kg
M1114	2,300 lb	1,044 kg
2. CAPACITIES*		
Cooling System	26 qt	24.6 L
Engine		
Crankcase Only	7 qt	6.6 L
Crankcase and Filter	8 qt	7.6 L
Fuel Tank	25 gal.	94.6 L
Differential (each)	2 qt	1.9 L
Transmission:		
Drain and Refill	7.7 qt	7.3 L
W/Dry Converter	13.5 qt	12.8 L
Transfer Case	3.35 qt	3.17 L
Geared Hub	1 pt	0.47 L
Steering Hydraulic System with Steering Cooler	1.25 qt	1.18 L
Brake Hydraulic System	1.63 pt	0.77 L
Brake Master Cylinder	1.12 pt	0.53 L
Windshield Washer Reservoir	2-1/2 qt	2.37 L

*ALL HYDRAULIC SYSTEMS AND ALL FUEL CAPACITIES ARE CALCULATED APPROXIMATIONS

Table 1-2. Tabulated Data (Cont'd).

	STANDARD	METRIC
3. ENGINE		
Model	GM 6.5 L	
Type	Diesel, Turbocharged Liquid-Cooled, V8	
Brake Horsepower	190 hp @ 3,400 rpm	119.4 kW @ 3,400 rpm
Idle Speed	700 ± 25 rpm	
Operating Speed	1,500-2,300 rpm	
Oil Pressure		
@ Idle	20 psi	138 kPa
@ Operating Speed	40-50 psi	276-345 kPa
4. FUEL SYSTEM		
Fuel Pump (Mechanical):		
Type	Cam-Driven Diaphragm	
Fuel Filter		
Type	Fuel/Water Separator	
Air Cleaner:		
Type	Dry Element	
Glowplug:		
Type	Fast Start	
5. COOLING SYSTEM		
Surge Tank Cap Pressure	15 psi	103 kPa
Thermostat:		
Starts to Open	190°F	88°C
Fully Open	212°F	100°C
Radiator:		
Type	Downflow	
Fan:		
Type	Ten Blade	
Diameter	19 in.	48.26 cm
6. ELECTRICAL SYSTEM		
Alternator:		
Manufacturer	Neihoff	
Model	12447109	
Output	200 A @ 1,600 rpm (engine)	
Rated Voltage	24V/12V	
Starter:		
Manufacturer	Prestolite	
Model	MFY	
Capacity	9.5 hp	
Voltage	24 V	
Batteries (2):		
Voltage	12 V	

Table 1-2. Tabulated Data (Cont'd).

	STANDARD	METRIC
7. TRANSMISSION		
Manufacturer	Hydramatic	
Model	4L80-E	
Type	4-Speed, Automatic, Torque Converter Stall Ratio of 2.1 and Direct Drive w/Lock-Up Clutch in Fourth Gear	
Gear Ratios		
First	2.48:1	
Second	1.48:1	
Third	1.00:1	
Fourth	0.75:1	
Reverse	2.08:1	
Oil Type	Dexron® III	
Oil Pressure	35-324 psi	241-2,234 kPa
8. TRANSFER CASE		
Manufacturer	New Venture Gear	
Model	242 w/Intercooler	
Gear Ratios:		
High and High Lock	1.0:1	
Low Lock	2.72:1	
9. DIFFERENTIAL		
Manufacturer	AM General	
Type	Hypoid Gears	
Gear Ratio	3.08:1	
10. GEARED HUB		
Manufacturer	AM General	
Type	Spur Gears	
Gear Ratio	1.92:1	
11. SERVICE BRAKE CALIPER (FRONT)		
Manufacturer	Kelsey-Hayes	
Piston Diameter	2.6 in.	66 mm
SERVICE/PARKING BRAKE CALIPER (REAR)		
Manufacturer	Kelsey-Hayes	
Piston Diameter	2.6 in.	66 mm
12. SERVICE BRAKE ROTOR (FRONT)		
Manufacturer	Kelsey-Hayes	
Diameter	12 in.	304 mm
Thickness	0.866 in.	22 mm
13. SERVICE/PARKING BRAKE ROTOR (REAR)		
Manufacturer	Kelsey-Hayes	
Diameter	12 in.	304 mm
Thickness	0.866 in.	22 mm

Table 1-2. Tabulated Data (Cont'd).

	STANDARD	METRIC
14. WHEELS AND TIRES		
Tire Size (Radial)	37 in. x 12.5 in. x 16.5 in.	93.98 cm x 31.75 cm x 41.9 cm
Wheels:		
Type	Offset Disc	
Runflat Insert:		
Type	Rubber	
15. STEERING SYSTEM		
Steering Gear:		
Manufacturer	Delphi	
Type	Variable Ratio	
Ratio	13/16:1	
Power Steering Pump:		
Manufacturer	Delphi	
Model	125	
Output Pressure (max)	1,450 psi	9,998 kPa
Capacity (engine 1,500 rpm)	2.6 gpm	
Flow Rate (max)	3.5 gpm	13.2 L/m
Toe-In (Front/Rear @ Curb Weight):	0.375 in. ± 0.1875 in.	11 mm ± 3.2 mm
16. FRAME		
Manufacturer	AM General	
Type	Box	
No. of Crossmembers	Five	
17. WINCH (optional)		
Model	MIL-9000	
Type	Electric Drive, Thermal Cutoff Switch	
Capacity	9,000 lb	4,086 kg
18. AIR-CONDITIONING COMPRESSOR		
Manufacturer	Harrison	
Model	510	
Field Coil	24V	

Section III. PRINCIPLES OF OPERATION

1-16. GENERAL

This section explains how components of the ECV series vehicles work together. The systems (functional groups) covered are listed in the Principles of Operation Reference Index, paragraph 1-17.

1-17. PRINCIPLES OF OPERATION REFERENCE INDEX

REF. PARA.	SYSTEM	PAGE NO.
1-18.	Drivetrain Operation	1-24
1-19.	Fuel System Operation	1-25
1-20.	Cooling System Operation	1-26
1-21.	Starting System Operation	1-28
1-22.	Generating System Operation	1-29
1-23.	Battery System Operation	1-30
1-24.	Windshield Wiper/Washer System Operation	1-31
1-25.	Service/Parking Brake System Operation	1-32
1-26.	Service Brake System Operation	1-33
1-27.	Steering Control System Operation	1-35
1-28.	Suspension System Operation	1-37
1-29.	M1114 Air-Conditioning System Operation	1-39
1-30.	200-Ampere Umbilical Power Cable	1-40

1-18. DRIVETRAIN OPERATION

The drivetrain is identical for both models covered in this manual. It converts horsepower into mechanical force to move the vehicle. Major components of the drivetrain are:

(A) **ENGINE** – The 6.5 liter V-8 turbocharged engine develops approximately 190 horsepower at 3,400 rpm to power the vehicle. The engines are essentially the same on all models except those equipped with deep water fording kit installed, which adds a specially vented CDR valve. This difference does not affect engine performance.

(B) **TRANSMISSION** – Adapts engine power to meet different driving conditions. The automatic transmission has four forward speeds, a reverse, a neutral, and a park. A neutral safety switch prevents the vehicle from being started with the transmission in any selector lever position except park and neutral.

(C) **TRANSFER CASE** – Directs engine-to-transmission power to front and rear differentials simultaneously. This condition means the vehicle is always in four-wheel drive. The transfer case allows for selection of three drive ranges and a neutral position. A complete description of these driving ranges and the recommended driving conditions during which they are used can be found in TM 9-2320-387-10.

(D) **PROPELLER SHAFTS** – Link transfer case to differentials. Universal joints, located at either end of the front and rear propeller shafts, permit inline driving power between the transfer case and differentials even though they are mounted at different angles.

(E) **DIFFERENTIALS** – Transmit driving power, via halfshafts and geared hubs, to left and right wheels. The differential ensures power is applied to the wheel having traction, regardless of which wheel is slipping. This feature is called torque biasing.

(F) **HALFSHAFTS** – Transmit power from differentials to geared hubs.

(G) **GEARED HUBS** – Serve as the front wheel steering spindle and act as the final drive components to front and rear wheels.

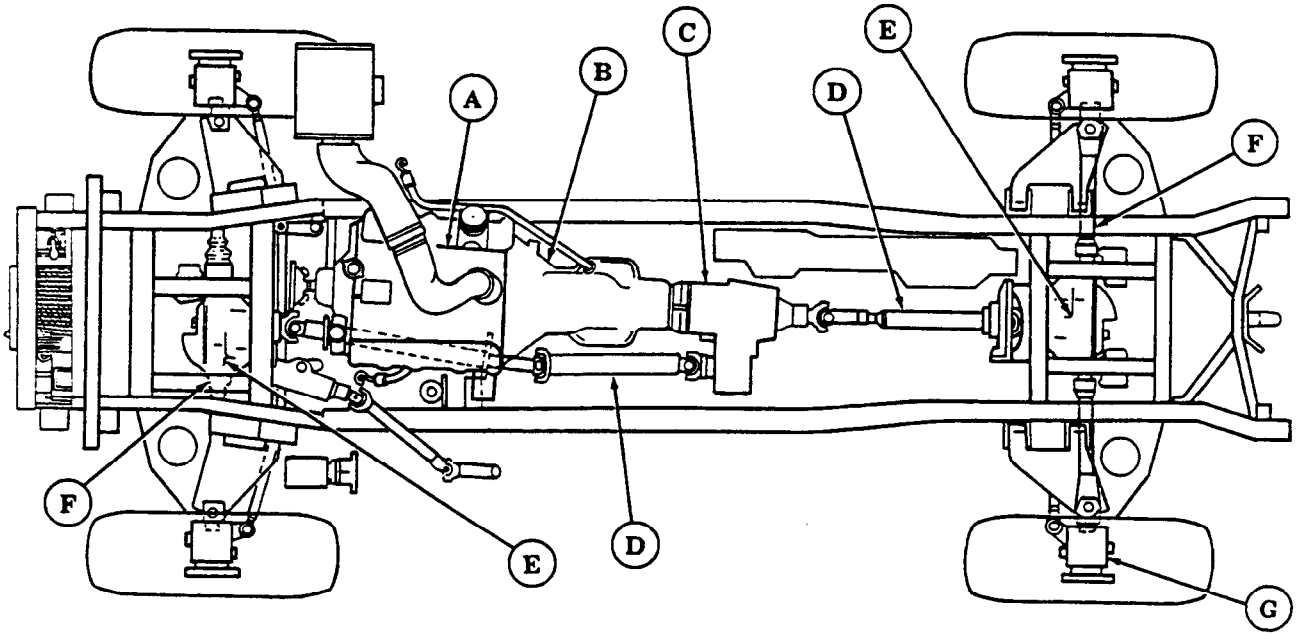

1-19. FUEL SYSTEM OPERATION

The HMMWV diesel fuel system operation is identical for both models covered in this manual. The system cleans and supplies fuel for the engine. Major components of the fuel system are:

(A) **FUEL PUMP** – Draws fuel from fuel tank through the supply line and pumps it to the fuel filter.

(B) **FUEL RETURN LINE** – Carries unused fuel from the injection pump back to the fuel tank.

(C) **FUEL SUPPLY LINE** – Carries fuel from fuel tank to the system.

(D) **FUEL TANK** – Stores 25 gallons (95 liters) of diesel fuel.

(E) **FUEL FILLER CAP** – Located at right rear side of vehicle, the cap is removed to permit fuel tank servicing.

(F) **FUEL INJECTORS** – Receive metered fuel from the injection pump and spray fuel into the combustion chambers.

(G) **FUEL FILTER/WATER SEPARATOR** – Filters water and sediment from fuel before fuel enters the injection pump.

(H) **INJECTION PUMP** – Directs metered and pressurized fuel to the eight injector nozzles. It is mounted on top of the engine under the intake manifold.

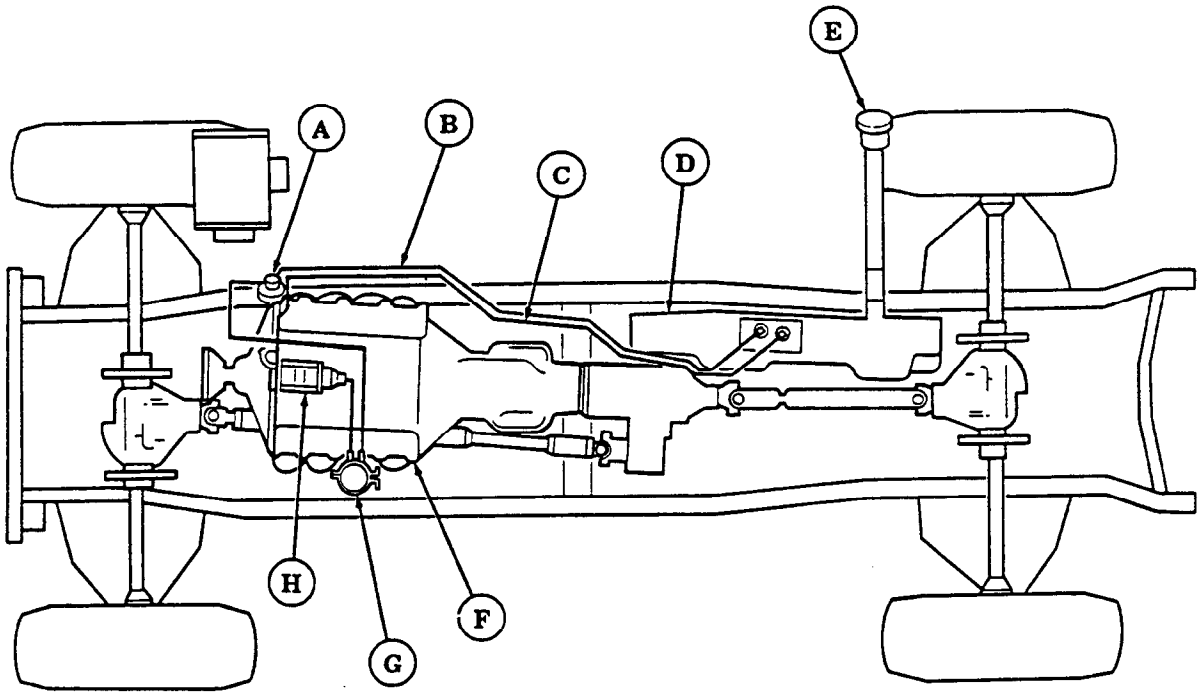

1-20. COOLING SYSTEM OPERATION

The cooling system removes excess heat from the engine, engine oil, transfer oil, and transmission oil. Major components of the cooling system are:

(A) **ENGINE TEMPERATURE SENDING UNIT** – Sends signal indicating coolant temperature to gauge on instrument cluster.

(B) **ENGINE TEMPERATURE SWITCH** – Sends signal to activate control valve system to operate fan when engine temperature exceeds 220°F (104°C) and deactivates when engine temperature drops below 190°F (88°C).

(C) **WATER CROSSOVER** – Collects coolant from cylinder heads and channels it to the thermostat housing where it is redirected through the cooling system.

(D) **THERMOSTAT** – Shuts off coolant return flow to radiator until temperature reaches 190°F (88°C). Coolant is then directed to the radiator through the radiator inlet hose.

(E) **RADIATOR** – Directs coolant through a series of fins and baffles so outside air can dissipate excess engine heat before the coolant is recirculated through the engine.

(F) **OIL COOLER** – Directs engine oil (lower half of cooler), power steering oil (lower half of cooler), and transmission oil (upper half of cooler) through a series of fins or baffles so outside air can remove heat from oil.

(G) **SURGE TANK** – Filling and expansion point for cooling system.

(H) **PERSONNEL HEATER** – Provides heat for personnel and interior of vehicle.

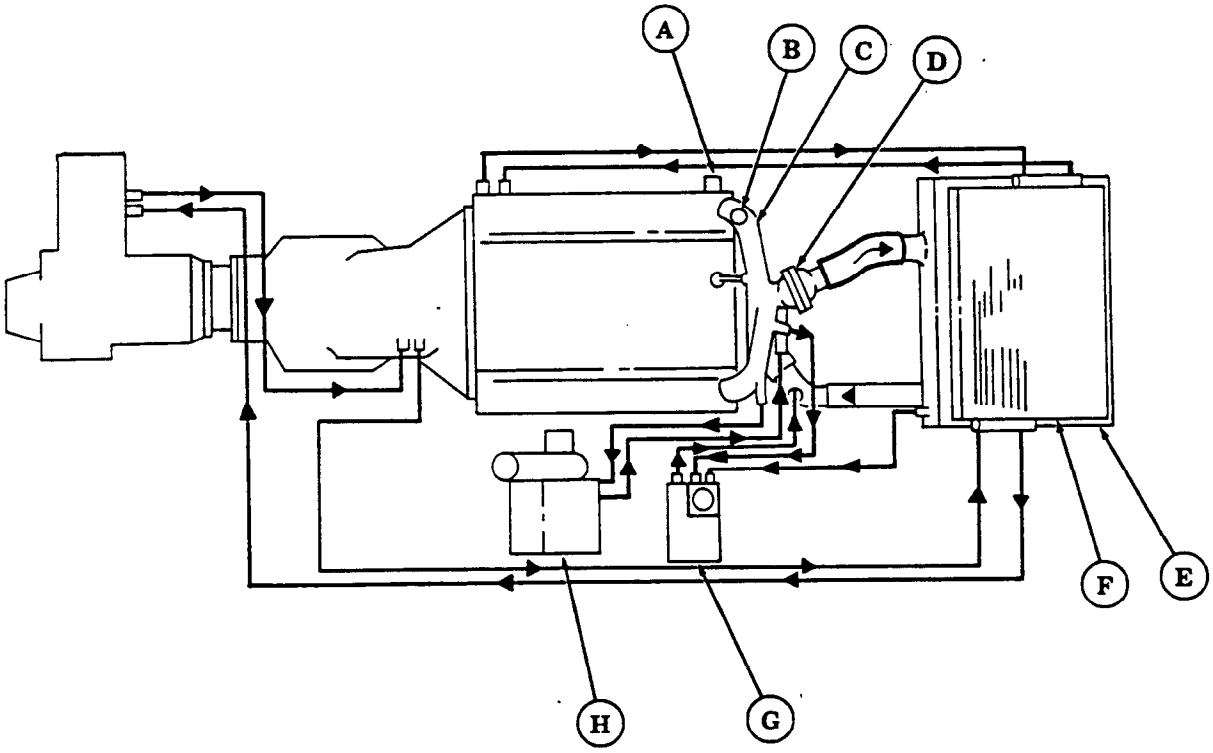

1-20. COOLING SYSTEM OPERATION (Cont'd)

(I) **FAN** – Pulls outside air through radiator to remove heat from coolant.

(J) **HYDRAULIC CONTROL VALVE** – Directs hydraulic fluid to provide required pressure to actuate fan clutch as required by engine temperature. Hydraulic pressure is supplied by power steering pump.

(K) **TIME DELAY MODULE** – Sends delayed signal to fan clutch solenoid for delay of fan actuation to provide needed horsepower for engine acceleration.

(L) **FAN CLUTCH SOLENOID** – Actuates hydraulic control valve as required by coolant temperature.

(M) **WATER PUMP** – Driven by serpentine belt, provides circulation of coolant through cooling system.

(N) **FAN CLUTCH** – Hydraulically actuated by pressure from hydraulic control valve to control operation of fan. Hydraulic pressure is supplied by power steering pump.

(O) **DRAINVALVE** – Draining point for radiator and cooling system.

(P) **RADIATOR SHROUD** – Permits a greater concentration of air to be pulled through the radiator.

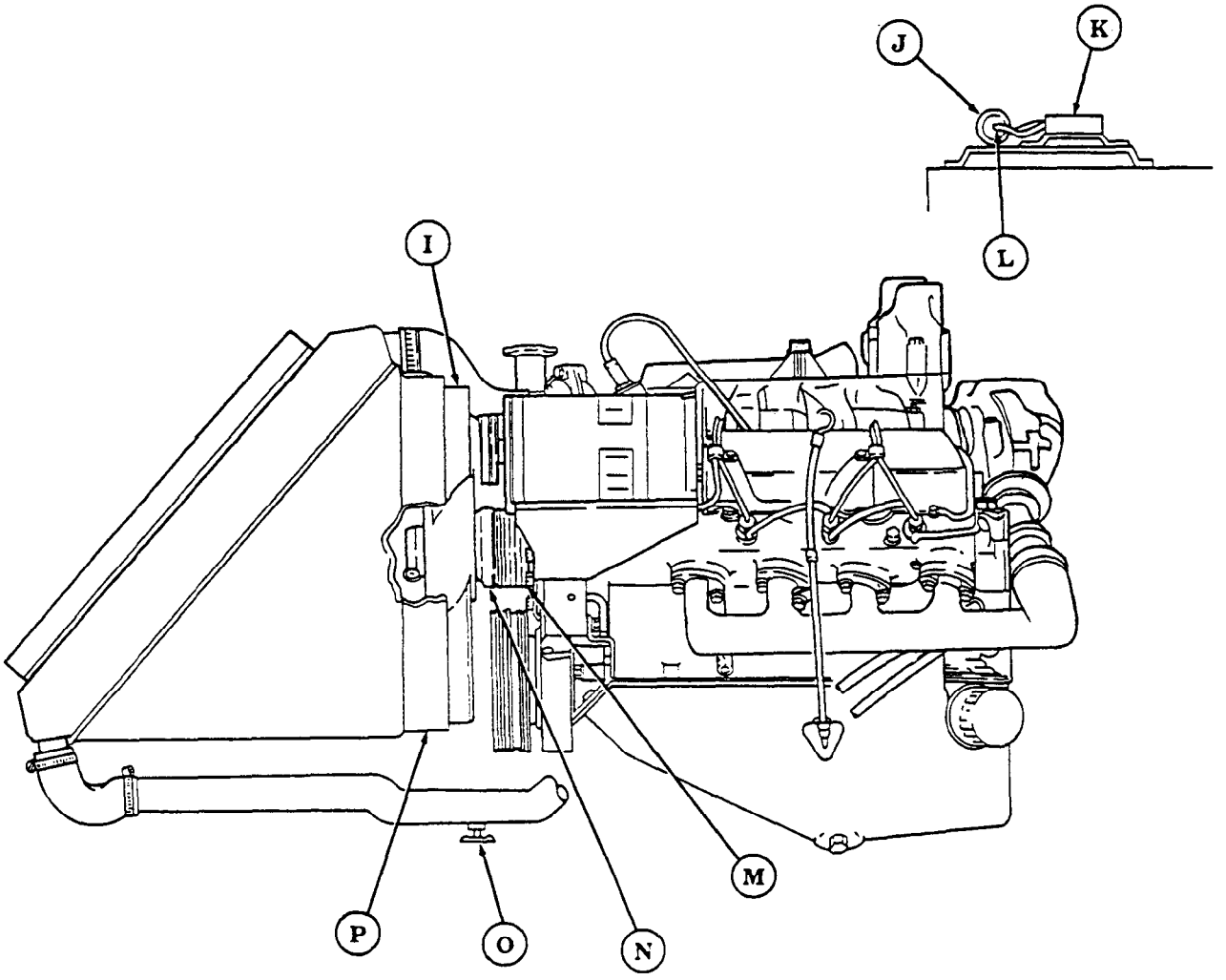

1-21. STARTING SYSTEM OPERATION

The starting system is identical for both vehicles covered in this manual, and consists of the following components and circuits:

(A) **ROTARY SWITCH** – When in START position, provides battery power through neutral start switch to the starter solenoid circuit 14.

(B) **NEUTRAL STARTER SWITCH** – When transmission shift lever is in P (Park) or N (neutral) position, this switch closes allowing battery power to reach the starter solenoid.

(C) **PROTECTIVE CONTROL BOX** – Acts as a link between body harness and engine harness.

(D) **STARTER SOLENOID** – A magnetic relay that transmits 24-volt battery power to the starter motor.

(E) **STARTER MOTOR** – Cranks the engine for starting, and is supplied 24-volt battery power through circuit 6A.

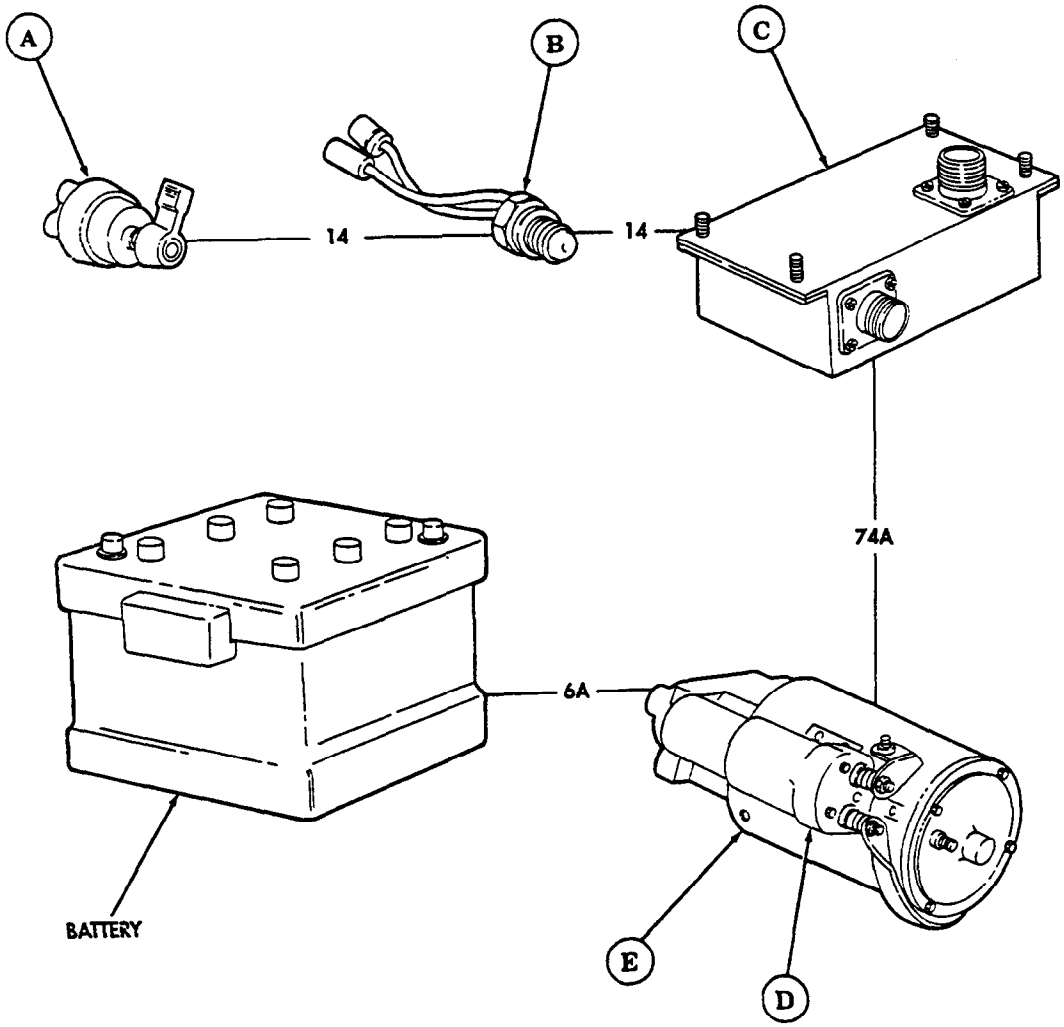

1-22. GENERATING SYSTEM OPERATION

The 200-ampere generating system maintains battery charge and provides electrical power to operate vehicle circuits. Major components of the generating system are:

(A) **BATTERY GAUGE** – Indicates electrical system voltage. It is connected to the electrical system through circuit 567.

(B) **ALTERNATOR (200-AMPERE)** – Is rated at 28 volts at 200 amperes, and 14 volts at 50 amperes with external regulator. The alternator assists and recharges the vehicle batteries during operation.

(C) **CIRCUIT 568** – Senses vehicle voltage, and activates the field current in the alternator circuit to alternator.

(D) **PROTECTIVE CONTROL BOX** – Protects the vehicle electric system in the event battery polarity is reversed. Provides load dump, glow plug operation, and interfacing of engine body harnesses.

(E) **CIRCUIT 2** – Sends AC signal, indicating alternator shaft rpm, to frequency switch in protective control box to prevent operation of starter solenoid when engine is running.

(F) **BATTERIES** – Two 12-volt batteries are connected in a series to provide 24 volts to start vehicle and assist alternator during operation.

(G) **POSITIVE CABLE 6** – Provides 28-volt alternator output to maintain charge across two batteries.

(H) **POSITIVE CABLE 68A** – Provides 16-volt alternator output to maintain charge across the lower battery.

(I) **CIRCUIT 3** – Connects to negative stud on alternator with engine ground strap to provide a ground circuit to alternator.

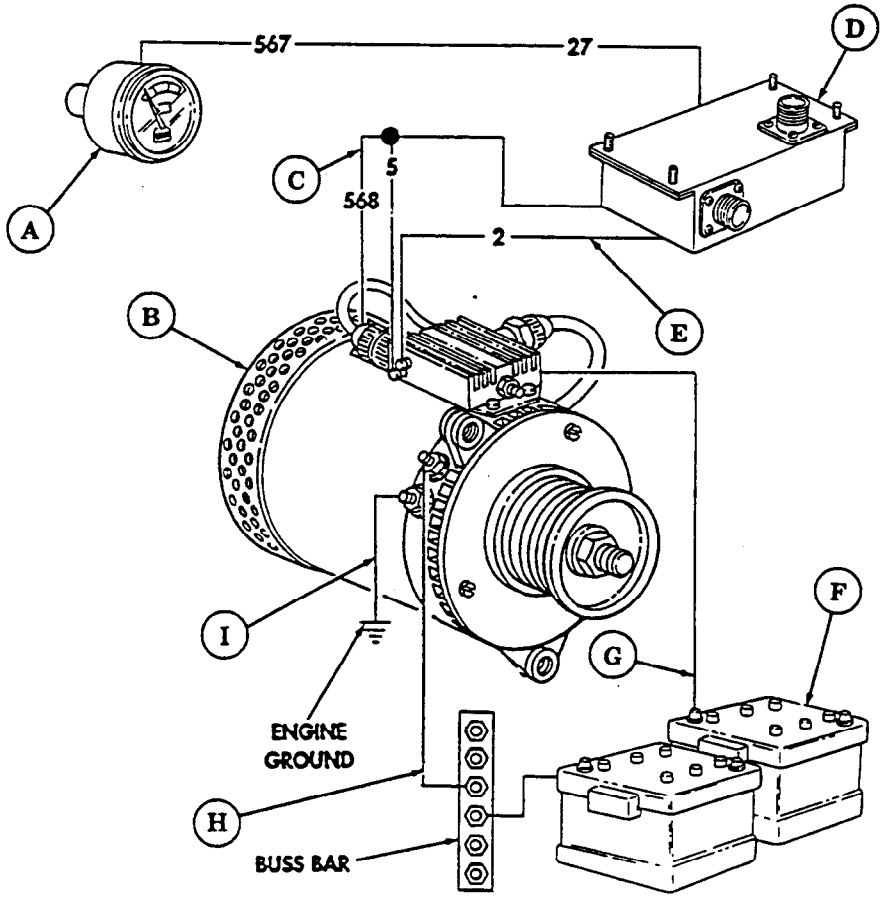

1-23. BATTERY SYSTEM OPERATION

The battery system is identical for both vehicles covered in this manual and consists of the following circuits and components:

(A) **CIRCUIT 6A** – Connects the batteries to the starter and to the protective control box through circuit 81A.

(B) **BATTERIES** – Two 6TN batteries are connected to provide 24 volts DC for the electrical starting system.

(C) **SLAVE RECEPTACLE** – Links an external power source directly to the slaved vehicle's batteries to assist in cranking the engine when the vehicle's batteries are not sufficiently charged.

(D) **SHUNT** – Used when measuring current draw from batteries utilizing STE/ICE-R.

(E) **PROTECTIVE CONTROL BOX (PCB)** – Protects the vehicle electrical system if the battery system polarity is reversed. Provides frequency lockout, load dump, glow plug operation, and interfacing of engine body harnesses.

(F) **ROTARY SWITCH** – When in START position, actuates starter solenoid through circuits 11A and 74A. When in RUN position, closes circuit 29A to activate instrument cluster gauges through circuit 27.

(G) **CIRCUIT 7A** – Connects the starter negative terminal to engine ground while circuit 7E connects shunt to engine ground.

(H) **STARTER SOLENOID** – Actuates starter motor gear to crank vehicle engine.

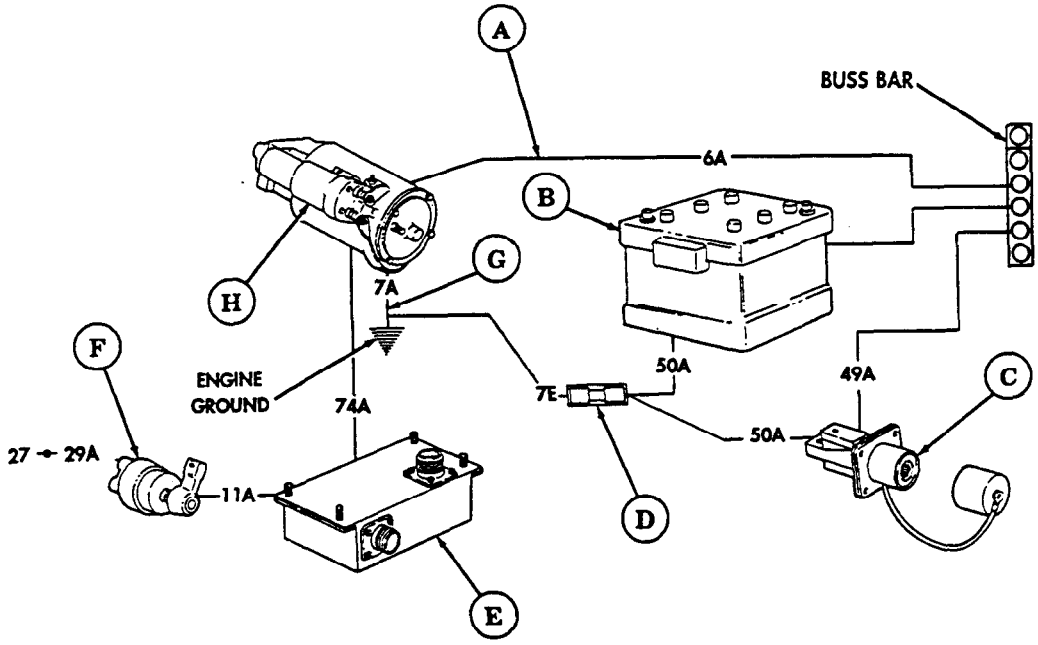

1-24. WINDSHIELD WIPER/WASHER SYSTEM OPERATION

The following miscellaneous components and circuits are not covered in any of the other electrical systems:

(A) **WINDSHIELD WIPER MOTOR** – When knob is turned to LOW or HIGH position, circuit 27 carries battery power to wiper motor to activate windshield wipers.

(B) **CIRCUIT 57** – Provides a ground circuit for wiper motor.

(C) **WINDSHIELD WASHER MOTOR** – When knob on wiper motor is pushed, the washer motor is activated through circuit 71 to spray water onto windshield.

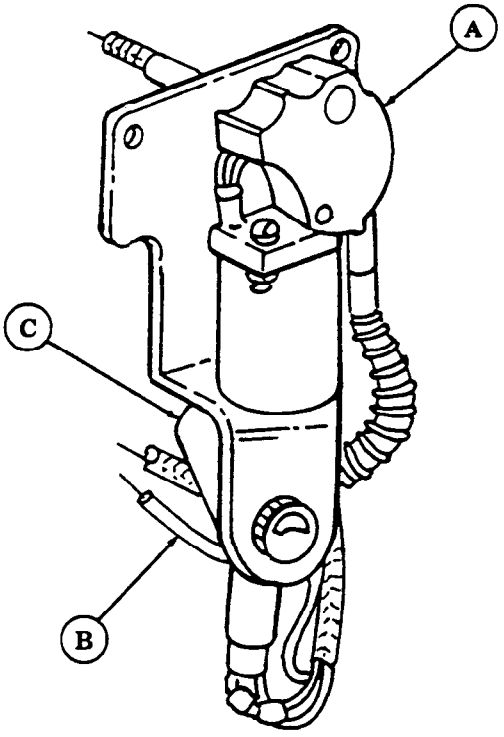

1-25. SERVICE/PARKING BRAKE SYSTEM OPERATION

The parking brake system is a mechanically-actuated system that provides a means of keeping the vehicle still once it stops. It also assists in emergency stopping if there is a complete service brake system failure. Major components of the parking brake system are:

(A) **PARKING BRAKE ROTORS** – Attached to output flanges on rear differential, rotors prevent output flanges from turning when parking brake is applied.

(B) **BRAKE PADS** – Apply friction to rotors when hand lever is applied.

(C) **PARKING BRAKE CALIPERS** – Force brake pads against rotors when hand lever is applied.

(D) **PARKING BRAKE CABLES** – Connect parking brake hand lever to equalizer bar.

(E) **EQUALIZER BAR** – Evenly distributes braking pressure to the rear brake rotors.

(F) **PARKING BRAKE ROD** – Connects parking brake hand lever to equalizer bar.

(G) **PARKING BRAKE HAND LEVER** – Permits operator to engage the parking brake.

(H) **PARKING BRAKE HAND LEVER ADJUSTING CAP** – Permits operator to make minor tension adjustment of parking brake.

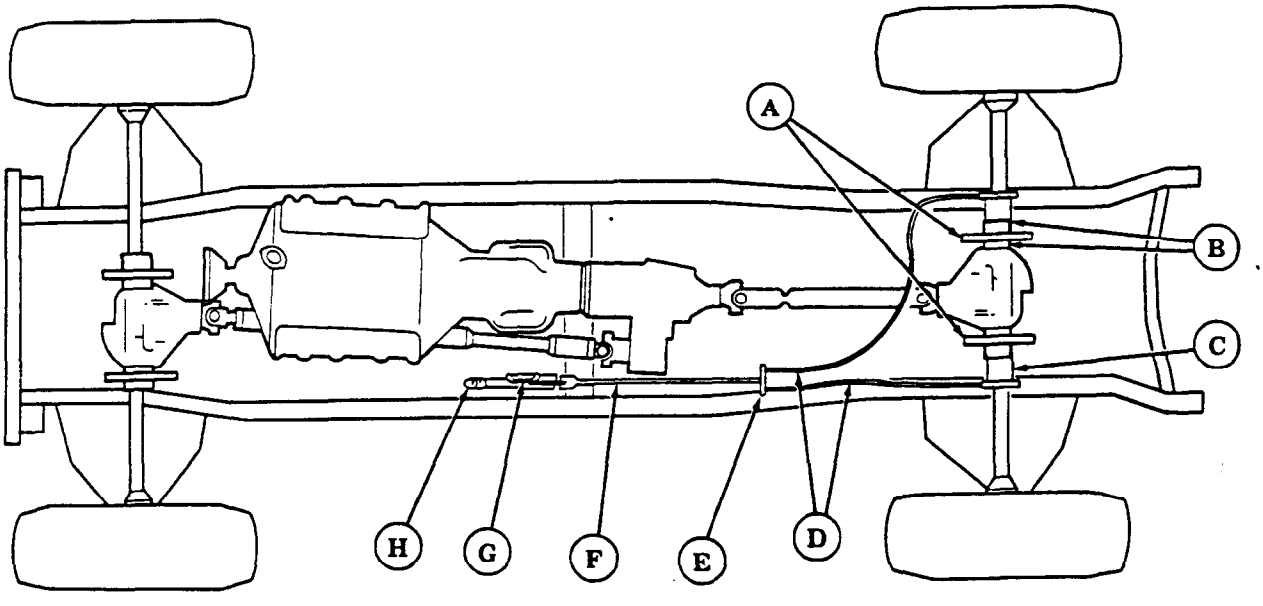

1-26. SERVICE BRAKE SYSTEM OPERATION

The service brake system is identical for both models covered in this manual. It is an inboard-mounted, four-wheel, disc brake, hydraulically-assisted system. Major components of the braking system are:

(A) **BRAKE LINKAGE** – Directs brake pedal pressure to hydro-booster.

(B) **HYDRO-BOOSTER** – Converts hydraulic power from the steering pump to mechanical power to the master cylinder, providing power assist during braking.

(C) **MASTER CYLINDER/RESERVOIR** – Stores brake fluid, and converts mechanical pedal pressure to hydraulic pressure.

(D) **PROPORTIONING VALVE** – Provides balanced front-to-rear braking and activates brake warning lamp in case of brake system malfunction.

(E) **ACCUMULATOR** – Stores hydraulic pressure for additional power-assisted braking in case of loss of pressure in steering system.

(F) **BRAKE PEDAL** – Provides operator control for stopping vehicle.

(G) **BRAKE PRESSURE LIMITER** – Limits front brake line pressure to prevent brake lockup.

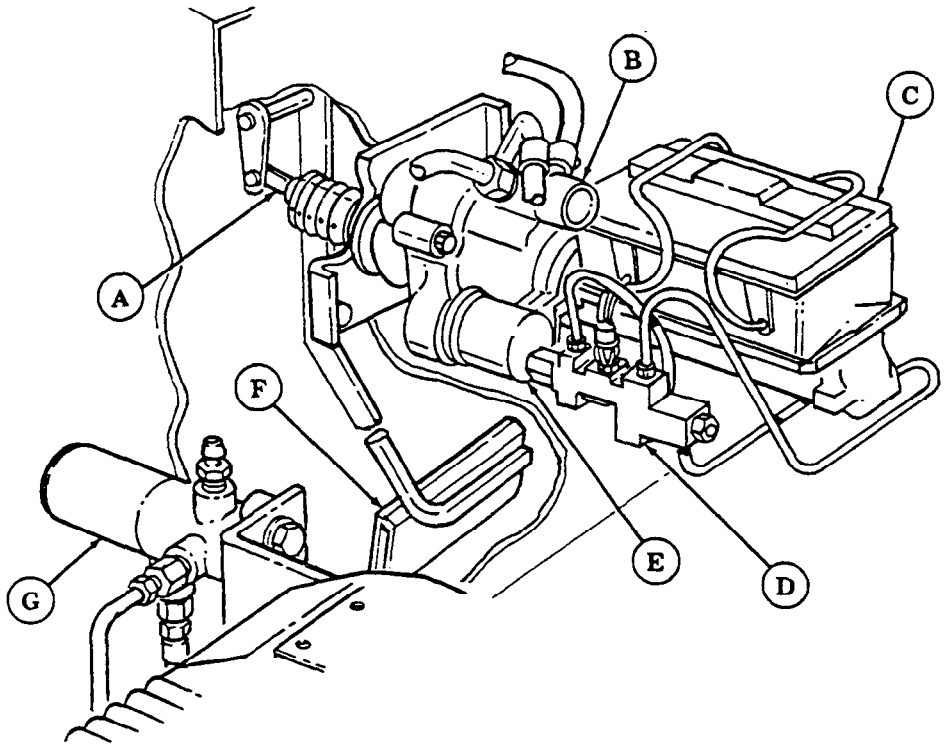

1-26. SERVICE BRAKE SYSTEM OPERATION (Cont'd)

(A) **HYDRAULIC BRAKE LINES** – Direct brake fluid under pressure to all four brake calipers from master cylinder.

(B) **BRAKE CALIPER** – Converts hydraulic pressure to mechanical force to compress brake pads against brake rotors.

(C) **BRAKE ROTOR** – Attached to output flange on front and rear differentials, rotor prevents output flange from turning when brakes are applied.

(D) **BRAKE PADS** – Apply friction to brake rotor when brake pedal is depressed.

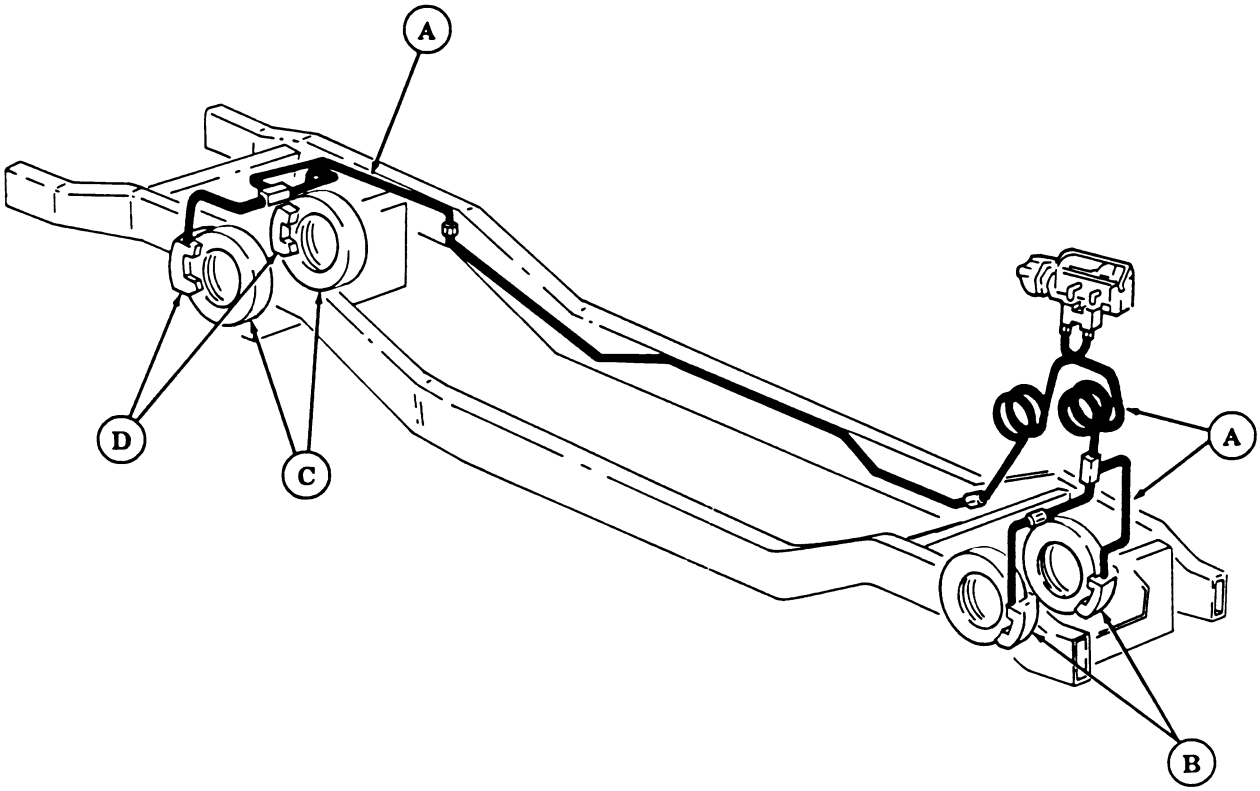

1-27. STEERING CONTROL SYSTEM OPERATION

The steering system is identical for both models covered in this manual. Major components of the steering system are:

(A) **HYDRAULIC CONTROL VALVE** – Directs hydraulic fluid to provide required pressure to actuate and deactuate fan clutch as required by engine temperature. Hydraulic pressure is supplied by power steering pump.

(B) **HYDRO-BOOSTER** – Converts hydraulic power from the steering pump to mechanical power to the master cylinder, providing power assist during braking.

(C) **POWER STEERING COOLER** – Is part of oil cooler which directs power steering fluid through a series of fins or baffles so outside air can dissipate excess heat before the fluid is recirculated through the steering system.

(D) **SERPENTINE BELT** – Transmits mechanical driving power from crankshaft drive pulley to steering pump pulley which drives the steering pump.

(E) **OIL RESERVOIR AND STEERING PUMP** – Combined in one unit, the reservoir serves as an oil filling point and the pump supplies the oil under pressure throughout the steering system.

(F) **FAN CLUTCH** – Hydraulically actuated and deactuated by the hydraulic control valve. The fan is actuated when hydraulic pressure is released, and deactuated when hydraulic pressure is applied. Hydraulic pressure is supplied by the power steering pump.

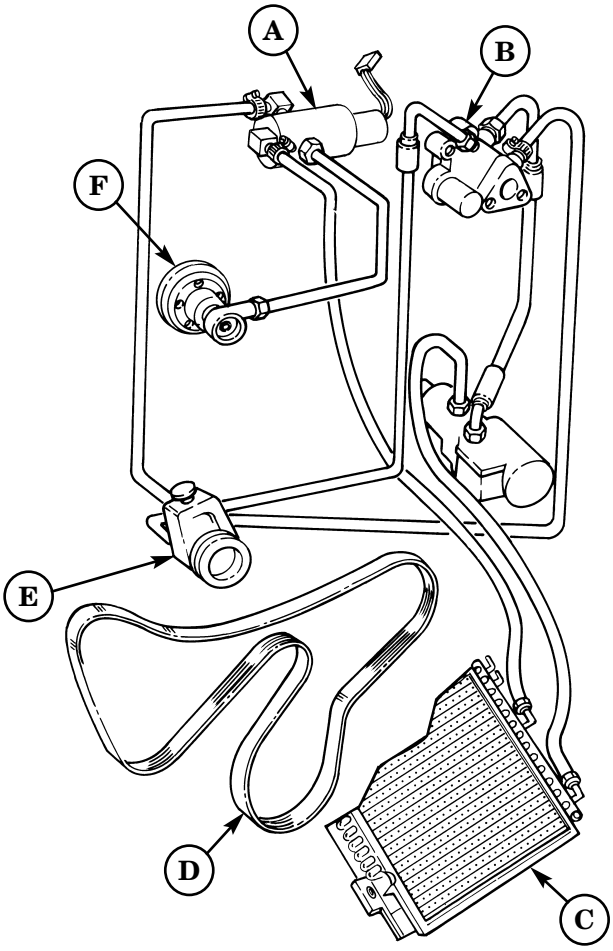

1-27. STEERING CONTROL SYSTEM OPERATION (Cont'd)

(A) **STEERING WHEEL** – Serves as manual steering control for the operator.

(B) **STEERING COLUMN** – Transmits turning effort from steering wheel to intermediate steering shaft.

(C) **INTERMEDIATE STEERING SHAFT** – Permits angle of torque from steering column to input shaft of power steering gear.

(D) **STEERING GEAR** – Converts hydraulic power from steering pump to mechanical power at pitman arm.

(E) **PITMAN ARM** – Transfers steering torque from power steering gear to center link.

(F) **TIE ROD ASSEMBLY** – Transmits movement from center link to geared hub.

(G) **GEARED HUB** – Serves as the pivot point and link for the front wheels via the tie rod assembly.

(H) **CENTER LINK** – Transmits movement from pitman arm to tie rods.

(I) **IDLER ARM** – Supports right side of center link.

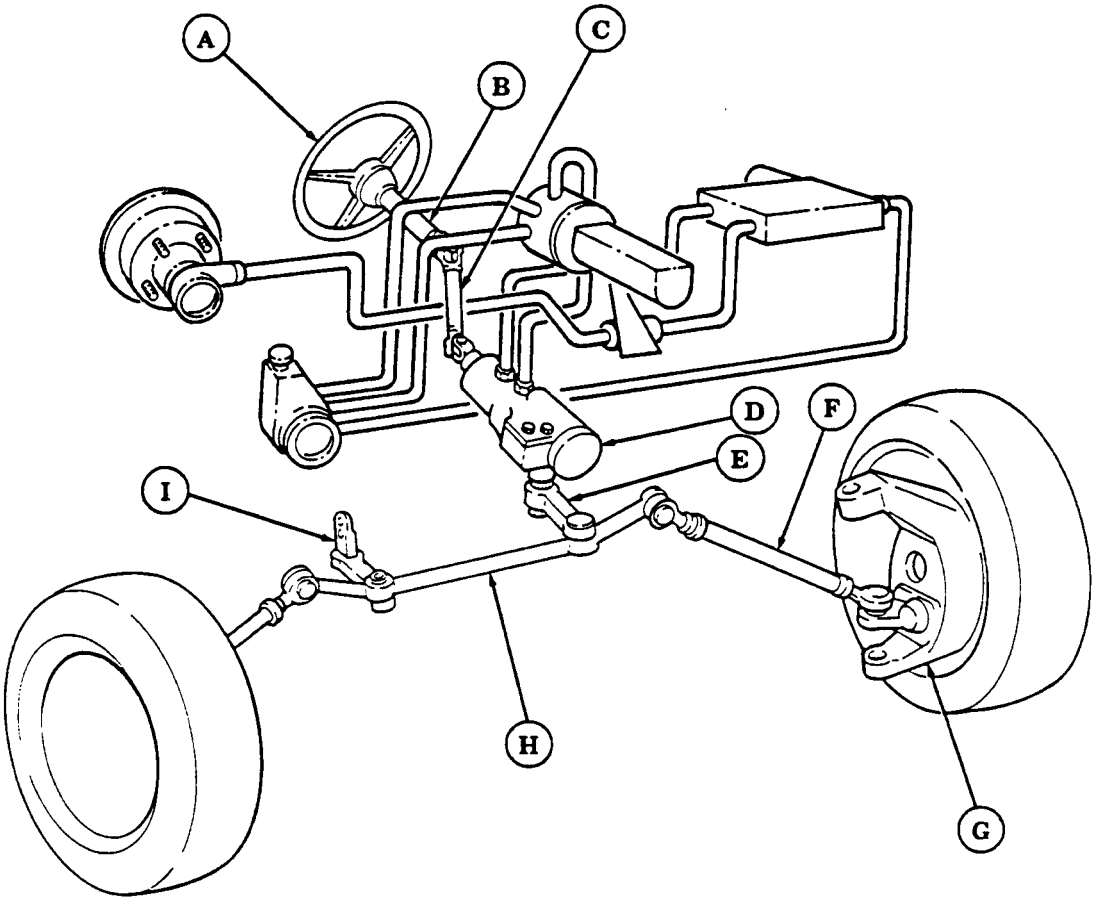

1-28. SUSPENSION SYSTEM OPERATION

The suspension system is identical for both models covered in this manual. It is an independent coil spring-type system. Major components of the suspension system are:

(A) **BALL JOINTS** – Connect geared hub to control arms, and allows change of angle between geared hub and control arms during suspension movement.

(B) **UPPER CONTROL ARM** – Connects geared hub to frame rail.

(C) **STABILIZER BAR (FRONT ONLY)** – Prevents vehicle sway when cornering.

(D) **GEARED HUB** – Serves as a mounting point for wheel and tire assembly and provides 1.92:1 gear reduction to increase torque to wheel and tire assembly.

(E) **LOWER CONTROL ARM** – Connects geared hub to frame rail.

(F) **SHOCK ABSORBER** – Dampens suspension movement and limits amount of suspension travel.

(G) **COIL SPRING** – Supports weight of vehicle and allows suspension travel to vary depending on terrain and vehicle loading.

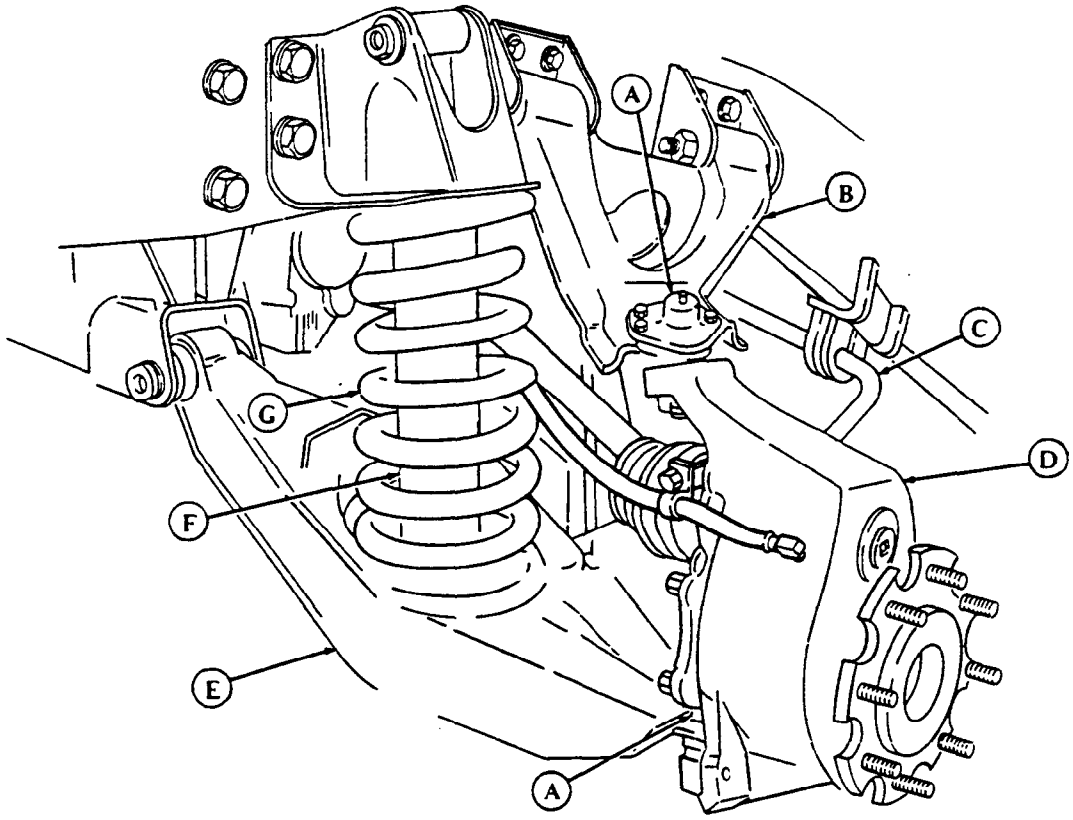

1-28. SUSPENSION SYSTEM OPERATION (Cont'd)

(A) **RADIUS ROD (REAR ONLY)** – Connects geared hub to frame to maintain rear end alignment.

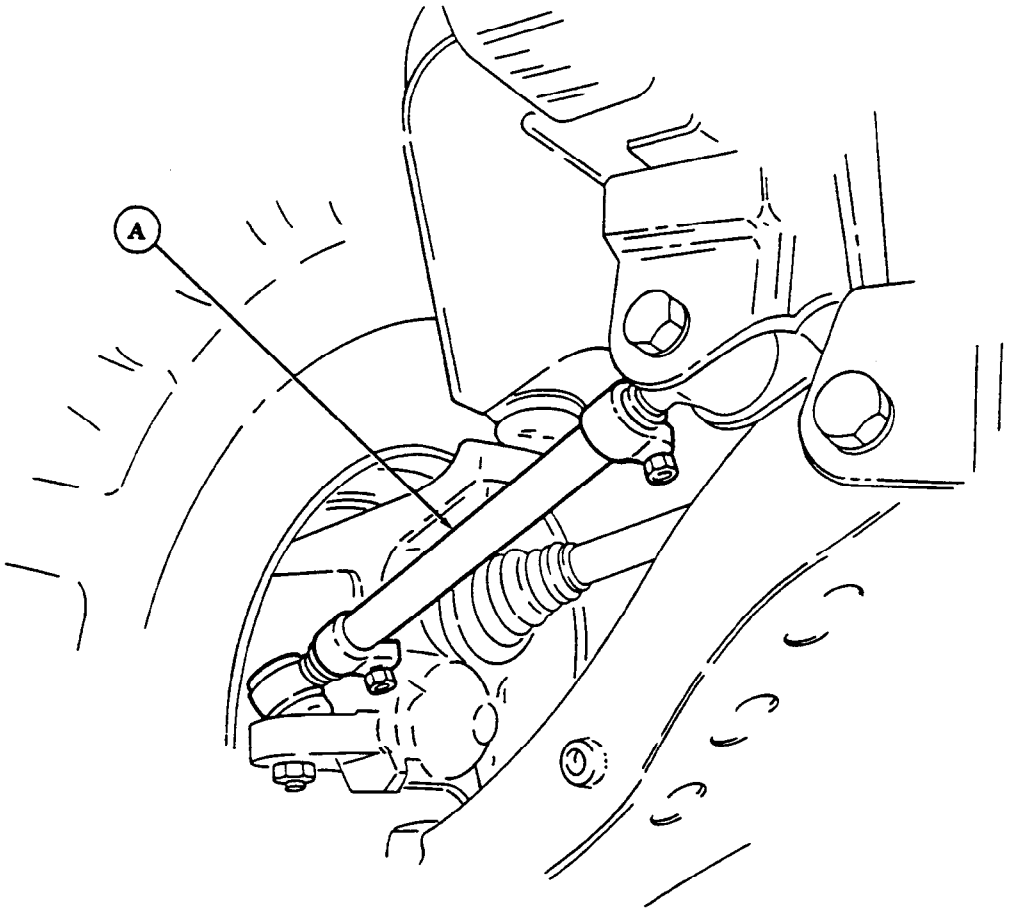

1-29. M1114 AIR-CONDITIONING SYSTEM OPERATION

The air-conditioning system covered in this manual applies only to the M1114 vehicle and consists of the following major components:

(A) **DISCHARGE LINE** – High-pressure gas is carried through the discharge line from the compressor to the condenser.

(B) **COMPRESSOR** – Inside the compressor, low-pressure gas refrigerant is compressed into a high-pressure gas that is pushed into the condenser by the compressor.

(C) **SUCTION LINE** – Refrigerant, in low-pressure gas form, is drawn from the evaporator by the suction action of the compressor.

(D) **EXPANSION VALVE** – High-pressure liquid refrigerant enters a nonadjustable expansion valve where the refrigerant is formed into a liquid spray.

(E) **EVAPORATOR** – Refrigerant enters evaporator as a liquid spray. It absorbs heat from the air in the crew compartment and vaporizes into a low-pressure gas.

(F) **LIQUID LINE** – High-pressure liquid refrigerant is carried back to the evaporator by the liquid line to repeat the evaporation/condensation cycle.

(G) **CONDENSER** – Refrigerant enters the condenser as a high-pressure gas. When condensed, it gives up its heat to the outside air and becomes a high-pressure liquid.

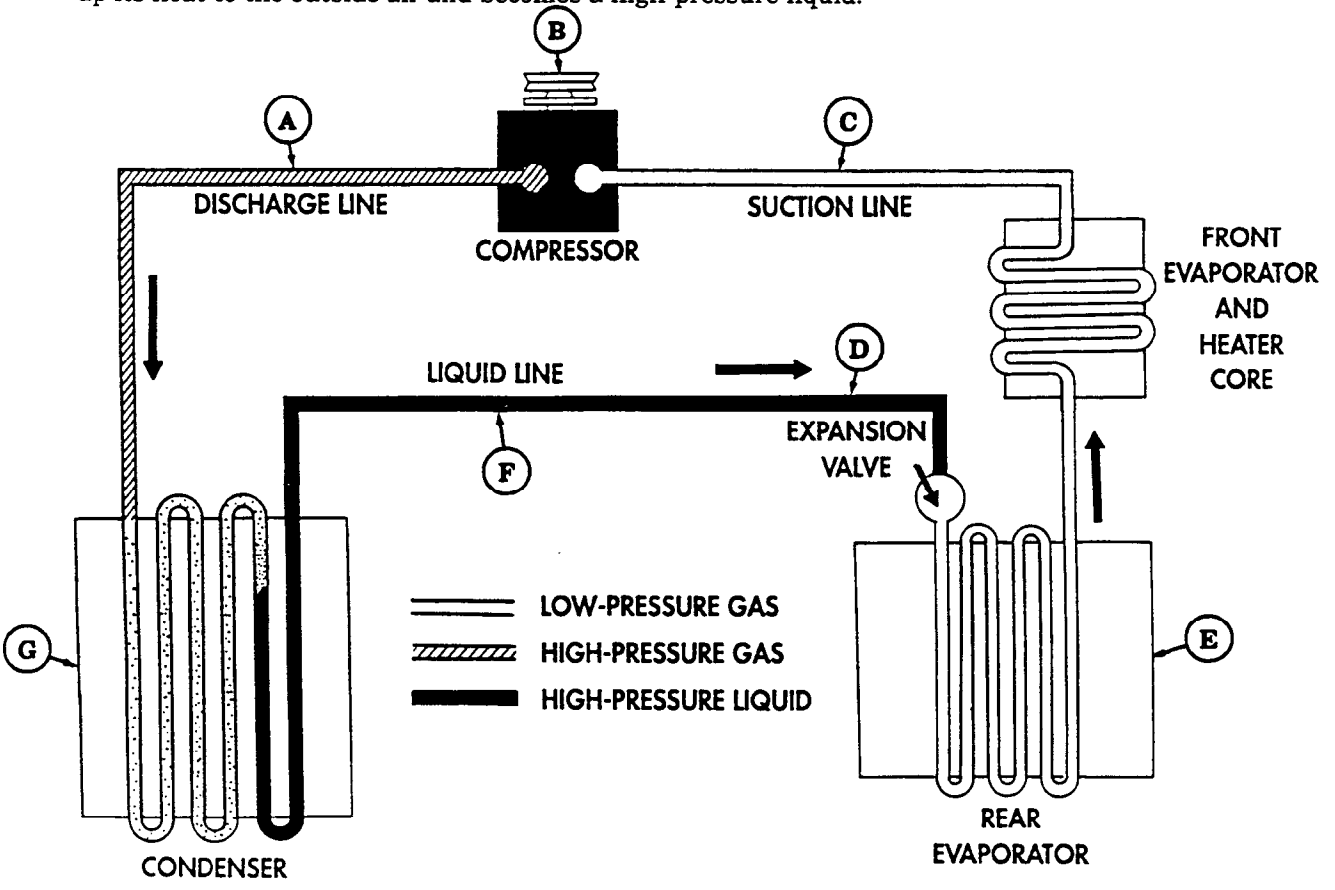

1-30. 200-AMPERE DUAL VOLTAGE UMBILICAL POWER CABLE

The 200-ampere dual voltage umbilical power cable covered in this manual applies to the M1113 and consists of the following major component:

(A) **POWER CABLE** – located behind the companion seat, provides power for shelter equipment.

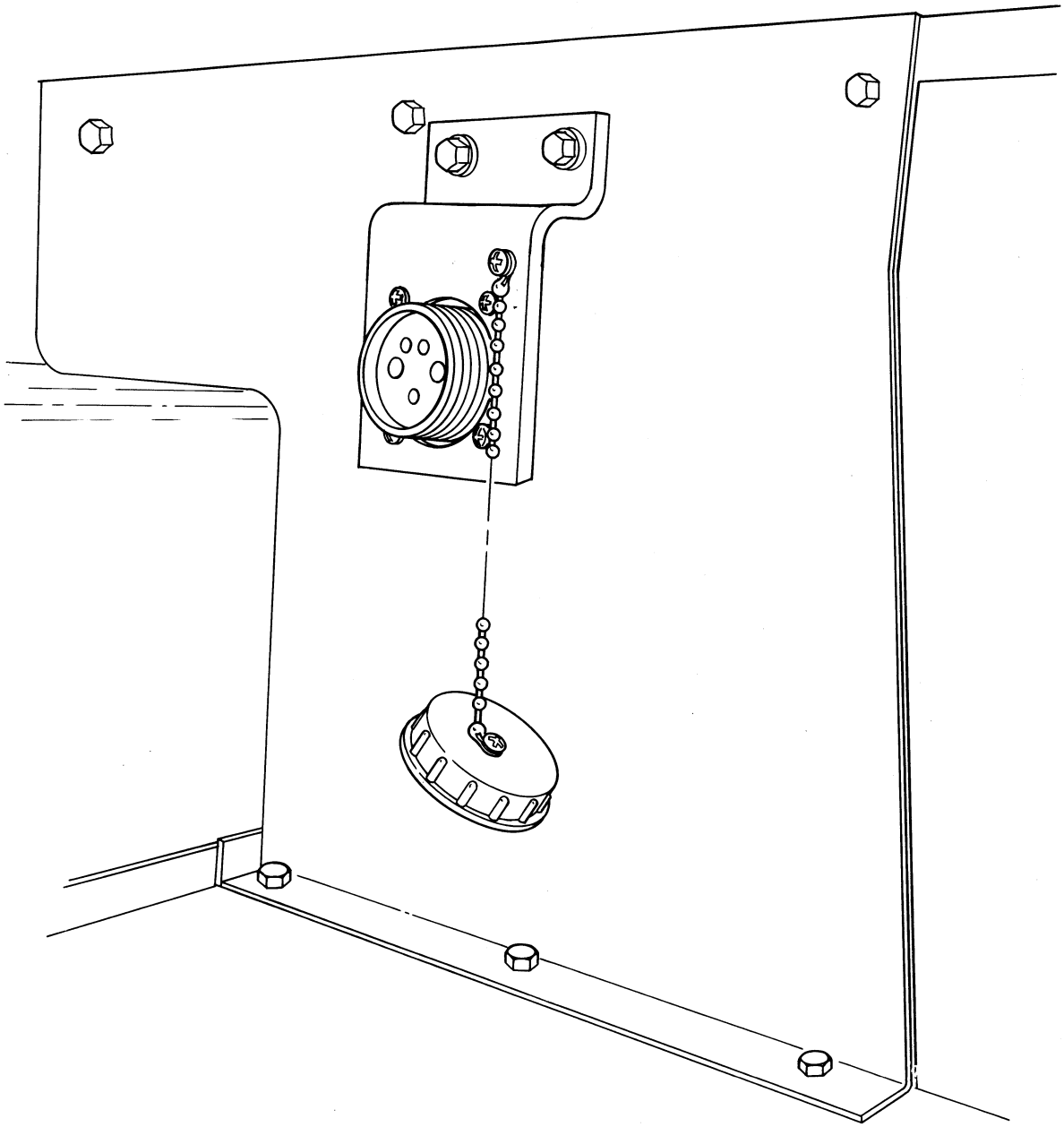

CHAPTER 2
SERVICE AND TROUBLESHOOTING (UNIT) INSTRUCTIONS

Section I. REPAIR PARTS, SPECIAL TOOLS, TEST, MEASUREMENT, DIAGNOSTIC EQUIPMENT (TMDE), AND SUPPORT EQUIPMENT

2-1. COMMON TOOLS AND EQUIPMENT

For authorized common tools and equipment, refer to the Modified Table of Organization and Equipment (MTOE) applicable to your unit.

2-2. SPECIAL TOOLS, TMDE, AND SUPPORT EQUIPMENT

Special Tools, Test, Measurement, and Diagnostic Equipment (TMDE), and Support Equipment used to maintain the vehicles covered in this manual can be found in TM 9-2320-387-24P. Calibrate all measuring and test equipment used to determine equipment conformance in accordance with TB 43-1800.

2-3. FABRICATED TOOLS

Fabricated tools needed to maintain the equipment in this manual can be found in appendix D. These tools are not available for issue, but must be fabricated and applied by unit, direct, and general support personnel only.

2-4. REPAIR PARTS

Repair parts are listed and illustrated in TM 9-2320-387-24P.

Section II. SERVICE UPON RECEIPT

2-5. GENERAL

a. Upon receipt of a new, used, or reconditioned vehicle, you must determine if the vehicle has been properly prepared for service. The following steps should be followed:

(1) Inspect all assemblies, subassemblies, and accessories to ensure they are in proper working order.

(2) Secure, clean, lubricate, or adjust as needed.

(3) Check all basic issue items (TM 9-2320-387-10) to ensure every item is present, in good condition, and properly mounted or stowed.

(4) Follow general procedures for all services and inspections given in TM 9-2320-387-10.

b. The operator will assist when performing service upon receipt inspections.

c. See TM 9-2320-387-10 when checking equipment for proper operation.

d. Refer to TM 9-2320-387-10 for information concerning break-in procedures.

2-6. GENERAL INSPECTION AND SERVICING INSTRUCTIONS

The following steps should be taken while performing general inspection and services:

NOTE

Cooler fin and engine protective covers can be used to prevent damage to the vehicle components during maintenance. Refer to appendix D, figures D-40 and D-41 for fabrication instructions.

(1) Use TM 9-2320-387-10 as well as other sections of this manual when servicing and inspecting equipment.

WARNING

Drycleaning solvent is flammable and will not be used near an open flame. A fire extinguisher will be kept nearby when the solvent is used. Use only in well-ventilated places. Failure to do this may result in injury to personnel and/or damage to equipment.

(2) Clean all exterior surfaces coated with rust-preventive compounds. Use drycleaning solvent (appendix C, item 26).

(3) Clean fittings before lubrication. Clean parts with drycleaning solvent (SD), type II, or equivalent. Dry before lubricating. Relubricate all items found contaminated after fording.

(4) Inspect electrical connectors for corrosion and/or damage (i.e., bent pins). Clean and repair damage. Apply sealing compound (appendix C, item 60) before reconnecting plugs.

(5) Read Processing and Deprocessing Record of Shipping, Storage, and Issue of Vehicles and Spare Engines, tag (DD Form 1397) and follow all precautions listed. This tag should be attached to steering wheel, steering column, or rotary switch.

2-7. SPECIFIC INSPECTION AND SERVICING INSTRUCTIONS

The following steps should be taken while performing specific inspections and services:

(1) Do the semiannual preventive maintenance checks and services listed in section III in this chapter.

(2) Lubricate the vehicle. Do not lubricate gear cases and engine unless processing tag states that the oil is unsuitable for 500 mi (805 km) operation. If oil is suitable, just check level.

(3) Schedule semiannual service on DD Form 314 (Preventive Maintenance Schedule and Record Card).

(4) If vehicle is delivered with a dry, charged battery, activate it according to TM 9-6140-200-14.

(5) Check vehicle coolant level and determine if solution is proper for climate (refer to TB 750-651 for preparation of antifreeze solutions).

(6) Remove towing brackets from their stowed position behind the bumper and install them in their proper location (para. 9-2).

Section III. PREVENTIVE MAINTENANCE CHECKS AND SERVICES

2-8. GENERAL

NOTE

The army has an agreement with the door manufacturer to issue free patch kits to repair armor doors that exhibit cracks originating from the window area. If you find cracks that extend 1.25 in. (31.75 mm) from either side or 6.25 in. (158.75 mm) below the window opening, contact TACOM, Light Truck Group, AMSTA-LC-CHLA, Warren, MI 48397-5000 at DSN 786-4389 or Commercial 586-574-3806, or E-mail uparmoredhmmwv@tacom.army.mil for guidance on obtaining a kit.

The best way to maintain vehicles covered by this manual is to inspect them on a regular basis so minor faults can be discovered and corrected before they result in serious damage, failure, or injury. All intervals are based on normal operation. Hard time intervals may be shortened if lubricants are contaminated or if you are operating the equipment under adverse conditions, including longer-than-usual operating hours. Hard-time intervals may be extended during periods of low activity, though adequate preservation precautions must be taken. This section contains systematic instructions of inspection, adjustment, lubrication, and correction of vehicle components to avoid costly repairs or major breakdowns. This is Preventive Maintenance Checks and Services (PMCS).

2-9. INTERVALS

a. Unit maintenance, assisted by operator/crew, will perform checks and services contained in table 2-1 at the following intervals:

(1) Semiannually. Every 6 months or 3,000 miles (4,828 km), whichever comes first.

(2) Annually. Every 12 months or 6,000 miles (9,656 km), whichever comes first.

(3) Biennially. Every 24 months or 12,000 miles (19,310 km), whichever comes first.

b. Refer to following steps when performing lubrication checks and services:

(1) Intervals. Lubrication services coincide with the vehicle's semiannual preventive maintenance service. For this purpose, a 10% tolerance (variation) in specified lubrication point mileage is permissible. Those vehicles not accumulating 1,000 mi (1,609 km) in a 6-month period will be lubricated at the time of semiannual preventive maintenance service.

(2) For Operation of Equipment in Protracted Cold Temperatures Below -15°F (-26°C). Remove lubricants prescribed in lubrication table for temperatures above -15°F (-26°C). Relubricate with lubricants specified in lubrication table for temperatures below -15°F (-26°C). If OEA lubricant is required, see the temperature ranges prescribed in the lubrication table. OEA lubricant is to be used in place of OE/HDO 10 lubricant for all temperature ranges where OE/HDO 10 is specified in the lubrication table.

c. Perform all semiannual inspections in addition to annual inspections at the time of the annual inspection. Perform all annual and semiannual inspections in addition to biennial inspections at the time of the biennial inspection.

2-10. REPORTING REPAIRS

All vehicle shortcomings will be reported on DA form 2404 (DA Pam 738-750), Equipment Inspection and Maintenance Worksheet, immediately after the PMCS, and before taking corrective action. All vehicle deficiencies will be reported in the equipment record.

2-11. GENERAL SERVICE AND INSPECTION PROCEDURES

a. While performing specific PMCS procedures, ensure items are correctly assembled, secure, not worn, serviceable, not leaking, and adequately lubricated as defined below:

(1) An item is CORRECTLY ASSEMBLED when it is in proper position and all parts are present.

(2) When wires, nuts, washers, hoses, or attaching hardware cannot be moved by hand, they are SECURE.

(3) An item is WORN if there is too much play between joining parts or when marking data, warning, and caution plates are not readable.

(4) An item is UNSERVICEABLE if it is worn beyond repair and is likely to fail before the next scheduled inspection.

(5) LEAKS. TM 9-2320-387-10 contains definitions of class I, II, and III leaks and their effect on vehicle operation.

(6) If an item meets the specified lubrication requirements, then it is ADEQUATELY LUBRICATED.

b. Where the instruction tighten appears in a procedure, you must tighten with a wrench to the given torque value even when the item appears to be secure.

WARNING

Drycleaning solvent is flammable and will not be used near an open flame. A fire extinguisher will be kept nearby when the solvent is used. Use only in well-ventilated places. Failure to do this may result in injury to personnel and/or damage to equipment.

c. Where the instruction clean appears in a procedure, you must use drycleaning solvent (appendix C, item 26) to clean grease or oil from metal parts. After the item is cleaned, rinsed, and dried, apply a light grade of oil to unprotected surfaces to prevent rusting.

d. Clean rubber and plastic materials with soap and water. Refer to TM 9-2320-387-10 for general vehicle cleaning instructions.

2-12. SPECIFIC PMCS PROCEDURES

a. The preventive maintenance for which you are responsible is provided in table 2-1. The checks and services listed are arranged in logical order, requiring minimal time and effort on your part.

b. The following columns read across on the PMCS schedule:

(1) Item Number. Provides logical order of PMCS performance and is used as a source number for DA Form 2404, on which your PMCS results will be recorded.

(2) Interval. Shows the interval next to each item number to indicate when that check is to be performed. The interval will be repeated when consecutive item numbers are to be inspected during the same interval. Interval columns include:

(a) Semiannual (six month) checks;

(b) Annual (yearly) checks; and

(c) Biennial (every two years) checks.

(3) Item To Be Inspected. Lists the system, common name, or location of the item to be inspected.

(4) Procedures. Provides instructions for servicing, inspection, lubrication, replacement, or adjustment and, in some cases, having item repaired at a higher level.

NOTE

Always do your preventive maintenance checks and services in the order prepared. Once it gets to be a habit, you will be able to spot anything wrong in a hurry.

(5) Not Fully Mission Capable If. If vehicle meets criteria in this column, vehicle is Not Mission Capable (NMC).

Table 2-1. Unit Level Preventive Maintenance Checks and Services HMMWV.

ITEM NO.	INTERVAL	ITEM TO BE INSPECTED	PROCEDURES	NOT FULLY MISSION CAPABLE IF:
			PRIOR TO ROAD TEST Ensure operator/crew has performed PMCS listed in TM 9-2320-387-10. ROAD TEST Maintenance personnel will be with vehicle operator to assist in performing PMCS checks and verify pre-service checks.	
1	Semi-annually	Pre-Service Checks	**a.** Notice if starter engages smoothly and turns the engine at normal cranking speed.	**a**. Starter inoperative or makes excessive grinding sound.
			b. Listen for unusual noise at idle, at operating speed, and under acceleration. Be alert for excessive vibration and the smell of oil, fuel, and exhaust.	**b.** Engine knocks, rattles, or smokes excessively.
			c. Check for transmission response to shifting and for smoothness of operation in all gear ranges. Be alert for unusual noises and difficulty in shifting in any speed range. **NOTE** If desired transfer case gear range cannot be selected, turn engine off, shift transmission to neutral or park, select transfer case range, and restart engine.	**c.** Transmission shifts improperly, does not shift, or makes excessive noises.
			d. Check for transfer response to shifting and for smoothness of operation in all gear ranges. Be alert for unusual noises and difficulty in shifting in any gear range.	**d.** Transfer jumps out of gear or makes excessive noises.
			e. Test for response to accelerator feed. Observe for sticking pedal.	**e.** Pedal sticking or binding.
			f. With vehicle speed at approximately 5 mph (8 kph), turn steering wheel to left, then right, to detect hard steering, steering backlash, or shimmy. Vehicle should respond instantly. With vehicle moving on straight, level terrain, lightly hold steering wheel to check for pull and wandering.	**f.** Steering binds, grabs, wanders, or has excessive free play.
			g. Apply brake pedal with steady force. Vehicle should slow and stop without pulling to one side or jerking. Release brake pedal. The brakes should release immediately and without difficulty.	**g.** Brakes chatter, pull to one side, or inoperative. Brakes will not release.

Table 2-1. Unit Level Preventive Maintenance Checks and Services HMMWV (Cont'd).

ITEM NO.	INTERVAL	ITEM TO BE INSPECTED	PROCEDURES	NOT FULLY MISSION CAPABLE IF:
1	Semi-annually	Pre-Service Checks (Cont'd)	**h.** Bring vehicle to full stop. Engage parking brake while transmission is still in Ⓓ (overdrive). Vehicle should remain stationary.	**h.** Parking brake doesn't hold vehicle stationary.
			i. Observe vehicle response to road shock. Side sway or continuous bouncing indicates a malfunction.	
			AFTER ROAD TEST	
2	Semi-annually	Body	**a.** Make sure the vehicle has been cleaned of mud, gravel, etc., from the underbody, outside, and crew compartment area.	
			b. Thoroughly wash all underbody sheet metal panels and corners.	
			NOTE Lubricate vehicle in accordance with lubrication table (page 2-29).	
			c. Inspect for loose rivets, cracks, loose or missing bolts, and general body damage.	**c.** Any body damage that would hinder vehicle operation.
			d. Inspect armor doors for cracks. If cracks are found, see note in para. 2-8.	
2.1	Semi-annually	Armor (M1114)	**NOTE** Gaps between vehicle armor panels that could allow penetration of a projectile or shrapnel could degrade armor system protection capabilities.	
			Inspect for gaps between armor components that could degrade armor system protection capabilities.	Any gap between armor components that could allow penetration of a projectile or shrapnel.

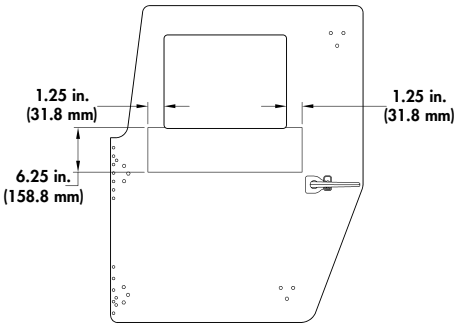

Table 2-1. Unit Level Preventive Maintenance Checks and Services HMMWV (Cont'd).

ITEM NO.	INTERVAL	ITEM TO BE INSPECTED	PROCEDURES	NOT FULLY MISSION CAPABLE IF:
3	Semi-annually	Fuel System	**a.** Inspect fuel filter/water separator assembly for dents and cracks that could cause leaks.	**a.** Any class III fuel leak.
			b. Inspect fuel injection pump, nozzle lines, and fittings for leaks and damage.	**b.** Any class III leak. Any nozzle loose or damaged.
			c. Inspect rear fuel injector nozzle rubber cap for presence and condition.	**c.** Rubber cap missing or damaged.
			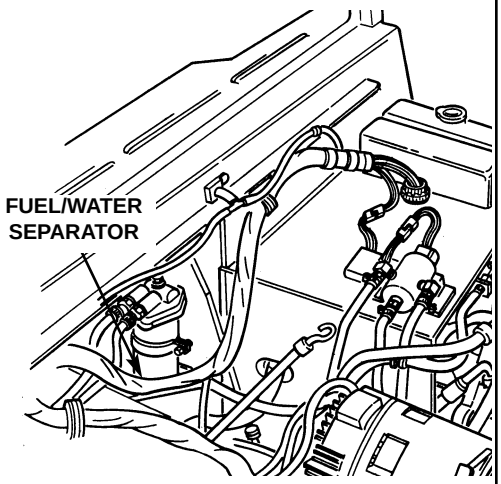	
			d. Inspect all fuel lines for loose connections, splits, cracks, and bends that could leak.	**d.** Any class III leak.
			e. Disconnect the leads from each glow plug (para. 3-39) and check for continuity between glow plug terminal and ground. Continuity should be present.	**e**. Continuity is not present.
			f. Check each glow plug for looseness and damage. Tighten each plug to 8-12 lb-ft (11-16 N·m).	**f.** Glow plugs are loose or damaged.
4	Semi-annually	Engine Accessory Drivebelt	Check for missing, broken, cracked, or frayed serpentine drivebelt.	Serpentine drivebelt is missing or broken. Belt fiber has more than one crack 1/8 in. (3.2 mm) in depth, or 50% of belt thickness, or has frays more than 2 in. (5 cm) long.

Table 2-1. Unit Level Preventive Maintenance Checks and Services HMMWV (Cont'd).

ITEM NO.	INTERVAL	ITEM TO BE INSPECTED	PROCEDURES	NOT FULLY MISSION CAPABLE IF:
5	Semi-annually	Protective Control Box	**a.** Inspect four bolts for security of mounting. **b.** Ensure cannon plugs are securely connected to box. 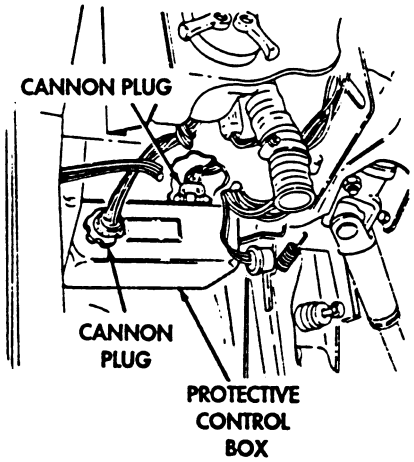 	**a.** Mounting not secure, four bolts loose.
6	Semi-annually	Cooling System	**WARNING** If vehicle has been operating, use extreme care to avoid being burned when removing cooling system radiator cap. Use heavy rags or gloves to protect hands. Turn radiator cap only one-half turn counterclockwise and allow pressure to be released before fully removing cap. **NOTE** • Coolant level is correct when coolant recovery tank is at the full mark (TM 9-2320-387-10). • Use MIL-A-46153 in temperatures above 0°F (-18°C) and MIL-A-11755 in temperatures below 0°F (-18°C). **a.** Check coolant condition. Test coolant to see if draining is necessary (TB 750-651). **b.** Inspect surge tank, radiator shroud, power steering cooler, oil cooler, all hoses, quick-disconnects, and fittings for security of mounting, leaks, and deterioration. Inspect and clean as necessary the radiator and oil cooler cores.	**a**. Coolant condition/ testing shows draining is required. **b.** Any class III water leak. Hoses cracked or dry-rotted.

Table 2-1. Unit Level Preventive Maintenance Checks and Services HMMWV (Cont'd).

ITEM NO.	INTERVAL	ITEM TO BE INSPECTED	PROCEDURES	NOT FULLY MISSION CAPABLE IF:
7	Semi-annually	Air-Intake System	**WARNING** If NBC exposure is suspected, all air filter media should be handled by personnel wearing protective equipment. Consult your unit NBC officer or NBC NCO for appropriate handling or disposal instructions. **a.** Inspect and clean air cleaner element and housing (para. 3-13). **b.** Check CDR valve oil saturation. Disconnect CDR valve oil fill tube hose from CDR valve and inspect. Some oil accumulation in the CDR valve is acceptable. **CAUTION** Do not clean CDR valve with solvent. This will damage the diaphragm inside the CDR valve. Wiping with a rag is the only authorized method of cleaning. **c.** Remove and wipe off the CDR valve and hoses with a rag. 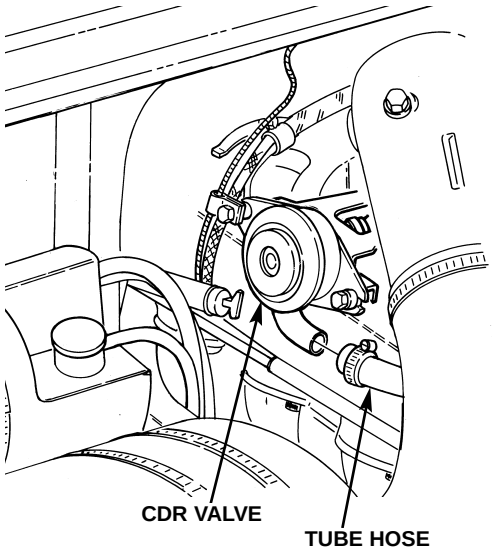 	

Table 2-1. Unit Level Preventive Maintenance Checks and Services HMMWV (Cont'd).

ITEM NO.	INTERVAL	ITEM TO BE INSPECTED	PROCEDURES	NOT FULLY MISSION CAPABLE IF:
8	Semi-annually	200-Amp Alternator	**a.** Inspect alternator and voltage regulator for condition, proper installation, and security of mounting.	**a**. Mounting bolts missing or alternator damaged.
			b. Inspect electrical wiring for broken strands, frayed, cracked, or worn insulation, and loose connections.	**b.** Wiring frayed, broken, or loose connections.
			c. Check pulley for damage.	**c.** Pulley damaged or pulley nut is loose.
			d. Check alternator mounting bolts for security of mounting. Tighten bolts to 40 lb-ft (54 N·m).	**d.** Any alternator mounting bolt is loose.
9	Semi-annually	Accelerator Linkage	Inspect for bends, excessive play, cracks, and damage that could cause failure.	Linkage damaged, bent, or cracked.
10	Semi-annually	Suspension and Steering System	**NOTE** If access to lower ball joint locknut is a problem, remove geared hub from control arm (para. 6-9).	
			a. Remove wheel and tire assembly (para. 8-3). Check front and rear lower ball joint mounting. Tighten lower ball joint to lower control arm locknuts to 60 lb-ft (81 N·m). Tighten ball joint slotted nut to 73 lb-ft (99 N·m) and ensure cotter pin is present.	**a.** Capscrews or locknuts are finger or hand turnable.
			b. Check front and rear upper ball joint mounting. Tighten upper ball joint to upper control arm locknuts to 37 lb-ft (50 N·m). Tighten upper control arm-to-bracket locknuts to 260 lb-ft (353 N·m). Tighten ball joint slotted nut to 73 lb-ft (99 N·m) and ensure cotter pin is present.	**b.** Capscrews or locknuts are finger or hand turnable.
			NOTE Do not overlubricate ball joints; one or two shots is adequate.	
			c. Lubricate front and rear upper and lower ball joints with GAA.	

Table 2-1. Unit Level Preventive Maintenance Checks and Services HMMWV (Cont'd).

ITEM NO.	INTERVAL	ITEM TO BE INSPECTED	PROCEDURES	NOT FULLY MISSION CAPABLE IF:
10	Semi-annually	Suspension and Steering System (Cont'd)	**NOTE** Do not lubricate shock absorber bushings, radius rod bushings, stabilizer bar bushing, or suspension arm pivot bushing.	
			d. Inspect control arms, control arm bushings, springs, shock absorbers, and bracket for damage.	**d.** Control arm bent, bushing worn, or obvious damage that would hinder operation.
			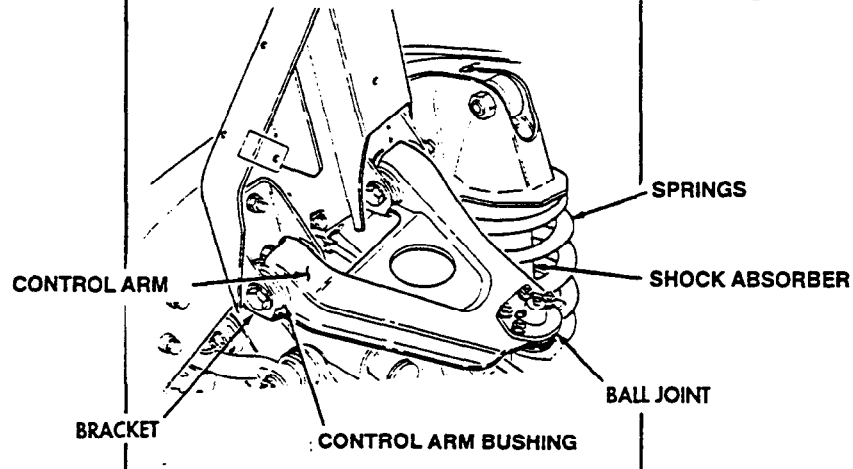	
			e. Inspect steering column U-joints, tie rods or radius rods, pitman arm, center link, and idler arm for breaks, cracks, and wear.	**e.** U-joints, tie rods, pitman arm, or idler arm are worn or cracked.
			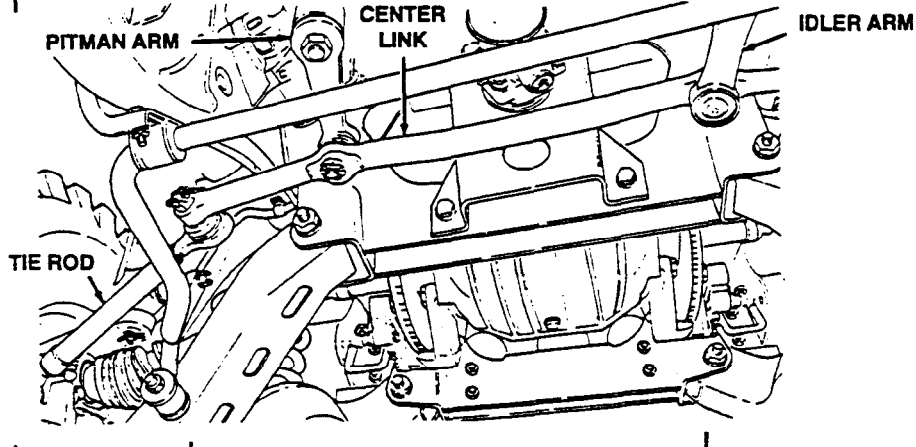	
			f. Inspect steering gear for mounting security. Tighten mounting bolts to 60 lb-ft (81 N•m).	**f.** Any mounting bolt missing or unserviceable.

Table 2-1. Unit Level Preventive Maintenance Checks and Services HMMWV (Cont'd).

ITEM NO.	INTERVAL	ITEM TO BE INSPECTED	PROCEDURES	NOT FULLY MISSION CAPABLE IF:
10	Semi-annually	Suspension and Steering System (Cont'd)	**g.** Inspect power steering pump, power steering gear, hydraulic control valve, hoses, lines, and fittings for leaks or damage.	**g.** Any class III leak. Any component damaged.
11	Semi-annually	Brake System	**a.** Inspect master cylinder, hydro-booster, proportioning valve, pressure limiter, lines, and fittings for leaks and damage. 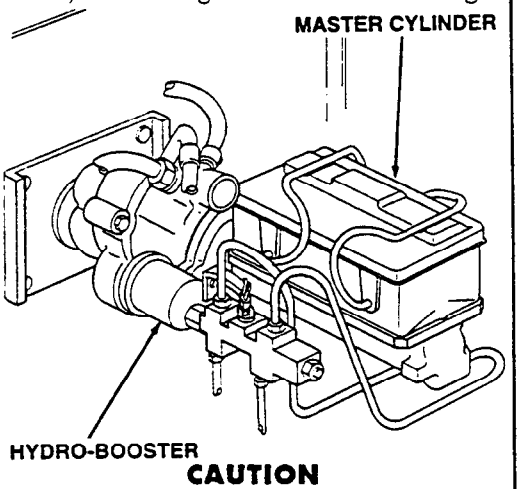 **CAUTION** • Use MIL-B-46176, Brake Fluid Silicone (BFS) for filling master brake cylinder. Failure to use BFS may cause damage to brake cylinder. • Thoroughly clean exterior of master cylinder cover before removing cover. Dirt, water, or grease will contaminate brake fluid, causing brake system damage. • Do not use screwdriver to remove cover. Damage to bail wire may result. • To prevent excessive fluid spillage, ensure that rubber diaphragm is completely seated before installing cover to master cylinder. **NOTE** Remove cover from brake master cylinder by moving bail wire using thumb pressure only. **b.** Check master brake cylinder fluid level. Level should be 1/8 in. (3.2 mm) from top of master cylinder reservoir. Fill with BFS as necessary.	**a.** Any leak. Plugged, broken, or damaged lines and fittings. **b.** Level below 1/8 in. (3.2 mm) from top of master cylinder reservoir.

Table 2-1. Unit Level Preventive Maintenance Checks and Services HMMWV (Cont'd).

ITEM NO.	INTERVAL	ITEM TO BE INSPECTED	PROCEDURES	NOT FULLY MISSION CAPABLE IF:
11	Semi-annually	Brake System (Cont'd)	**c.** Inspect service brake pads and service brake rotors for wear (para. 7-3).	**c.** Service brake pads less than 1/8-in. (3.2 mm). Service brake rotors less than 13/16-in. (20.7 mm).
			c.1. Inspect brake calipers for fluid leaks.	**c.1.** Any leaks.
			d. Inspect rear dual service/parking brake pads and rotors for wear (para. 7-14).	**d.** Brake pads less than 1/8-in. (3.2 mm). Service brake rotors less than 13/16 in. (20.7 mm).

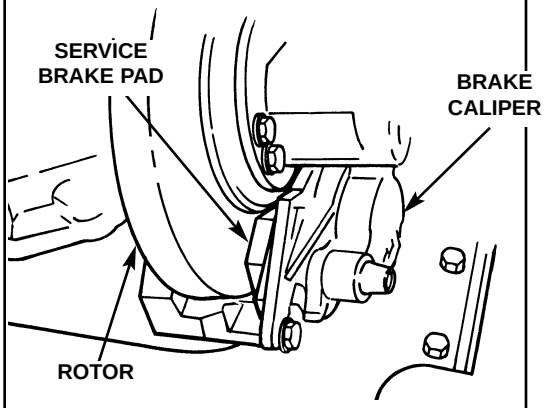

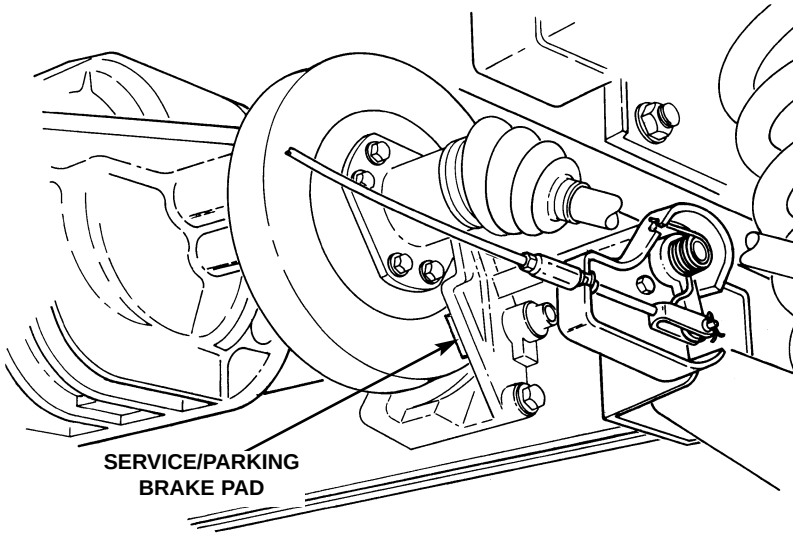

Table 2-1. Unit Level Preventive Maintenance Checks and Services HMMWV (Cont'd).

ITEM NO.	INTERVAL	ITEM TO BE INSPECTED	PROCEDURES	NOT FULLY MISSION CAPABLE IF:
11	Semi-annually	Brake System (Cont'd)	**e.** Inspect parking brake cable, cable clip, lever, spring, and pushrod/guide pin for binding and loose components. 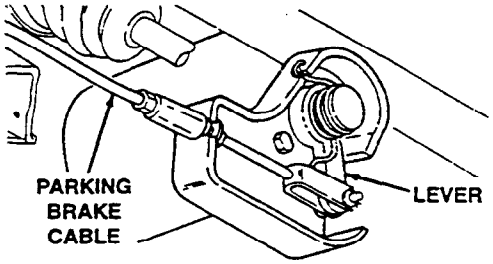	**e.** Parking brake binding, or cable frayed or broken. Spring or cable clip missing.
			f. Inspect left and right parking/service brake assembly mounted between rear axle halfshafts and rear differential. Lubricate parking brake lever with grease (Appendix C, Item 32). Parking/service brake assembly needs no lubrication.	
			g. Inspect rear parking brake cables for damage and/or chaffing in the area of the control arm. If cables are damaged, replace cables (paras. 7-16 and 7-17).	**g.** Parking brake binding, or cable frayed or broken.
12	Semi-annually	Engine and Transmission Mounts	**a.** Inspect engine mounts and insulators for cracks, loose, worn, or damaged condition.	**a.** Engine mounts or insulators cracked, damaged, loose, or worn.
			b. Check for loose or missing engine mount capscrews and locknuts. If engine mount capscrews or locknuts are loose or missing, notify DS maintenance. (Refer to para. 15-3). 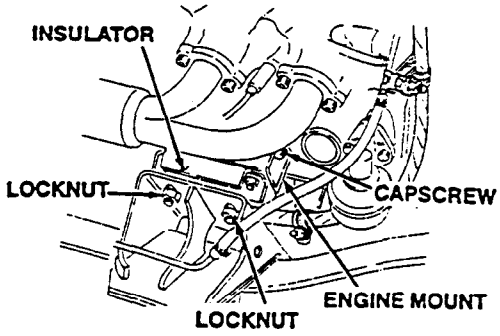	**b.** Capscrews or locknuts loose or missing.

Table 2-1. Unit Level Preventive Maintenance Checks and Services HMMWV (Cont'd).

ITEM NO.	INTERVAL	ITEM TO BE INSPECTED	PROCEDURES	NOT FULLY MISSION CAPABLE IF:
12	Semi-annually	Engine and Transmission Mounts (Cont'd)	**c.** Using 3/4-in. torque adapter (appendix B, item 134), tighten two capscrews securing transmission mount-to-adapter to 65 lb-ft (88 N•m). Tighten two locknuts securing transmission mount-to-crossmember to 28 lb-ft (38 N•m).	**c.** Transmission mount loose, cracked, or damaged.
			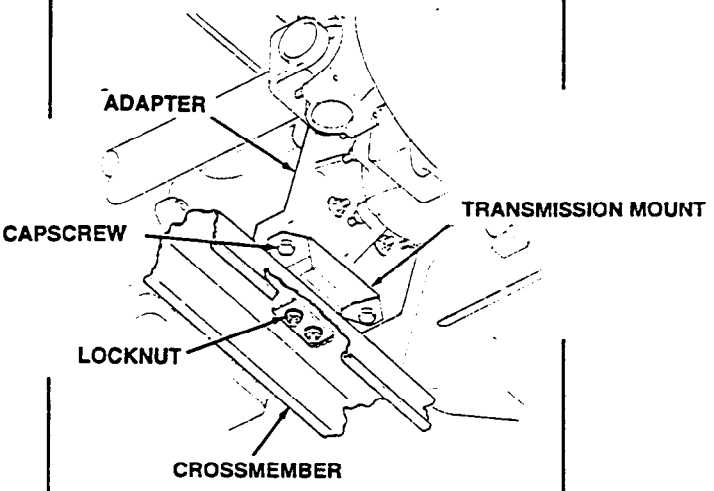	
13	Semi-annually	Starter	**CAUTION** Disconnect negative cable.	
			a. Inspect starter for mounting security. Tighten mounting bolts to 40 lb-ft (54 N•m).	**a.** Mounting bolt missing or will not torque.
			b. Inspect cables and studs for loose nuts and damage.	**b.** Stud nut loose.
14	Semi-annually	Transmission	**a.** Inspect vent lines and connectors for security, cracks, and deterioration.	**a.** Vent line cracked, plugged, or missing.
			b. Inspect transmission shift linkage for bends, excessive play, cracks, and damage that could cause failure.	**b.** Shift linkage is unserviceable.
15	Semi-annually	Transfer Case	**a.** Inspect transfer case vent lines and connectors for security, cracks, and deterioration.	**a.** Vent line cracked, plugged, or missing.
			b. Inspect transfer case shift linkage for bends, excessive play, cracks, and damage that could cause failure.	**b.** Shift linkage is unserviceable.

Table 2-1. Unit Level Preventive Maintenance Checks and Services HMMWV (Cont'd).

ITEM NO.	INTERVAL	ITEM TO BE INSPECTED	PROCEDURES	NOT FULLY MISSION CAPABLE IF:
15	Semi-annually	Transfer Case (Cont'd)	**CAUTION** Use Dexron® III for filling transfer case. Failure to use Dexron® III may cause damage to transfer case. **c.** Check transfer case fluid level every 3,000 mi (4,800 km) or semiannually, whichever occurs first. Remove fill plug and gasket. Level should be within 1/2 in. (12.7 mm) of fill plug opening when vehicle is on level ground. Install fill plug and gasket, and tighten to 35 lb-ft (47 N•m). 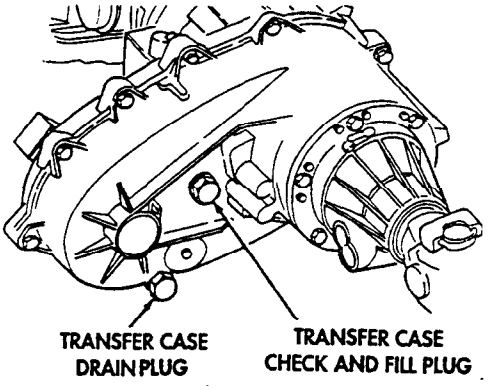 **NOTE** Do not overtorque retaining nuts. **d.** Inspect oil cooler lines for leaks. Check for loose oil cooler line nuts. If loose, hold oil cooler line stationary and, using a pound-inch torque wrench, tighten line nuts to 192-216 lb-in. (22-24 N•m). 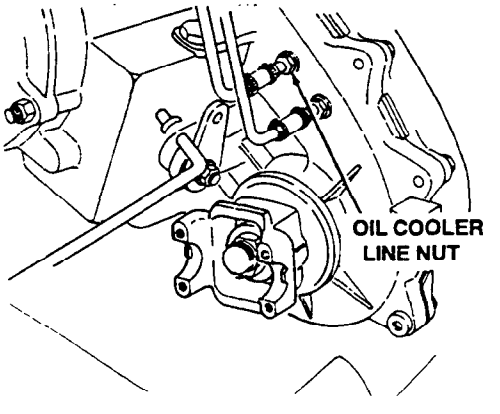 	**d.** Any class III oil leak.

Table 2-1. Unit Level Preventive Maintenance Checks and Services HMMWV (Cont'd).

ITEM NO.	INTERVAL	ITEM TO BE INSPECTED	PROCEDURES	NOT FULLY MISSION CAPABLE IF:
16	Semi-annually	Driveline Components	**NOTE** Fill each geared hub with 1 pt (0.5 L) of GO.	
			a. Inspect geared hub vent lines and connectors for security, cracks, and deterioration.	**a.** Hub vent lines cracked, plugged, or missing.
			b. Inspect geared hub for leaking seals and damage.	**b.** Class III leaks or damage.
			c. Adjust spindle bearing (para. 6-12).	**c.** Bearing damaged.
			NOTE Fill each axle differential with 2 qt (1.9 L) of GO.	
			d. Change differential lubricant every 3,000 mi (4,830 km), when required by maintenance repair action or when contaminated by water or foreign material. Remove fill plug. Level should be within 1/4 in. (6.4 mm) of fill plug opening when lubricant is cold, or to plug level when hot. Install fill plug, and tighten to 35 lb-ft (47 N•m).	**d.** Lube level not within 1/4 in. (6.4 mm) of fill plug opening when cold or to plug level when hot.
			e. Inspect differential vent lines and connectors for security, cracks, and deterioration.	**e.** Differential vent line has hole, plugged, or cracked.
			f. Inspect differentials for leaking seals and cracks.	**f.** Class III leak.
			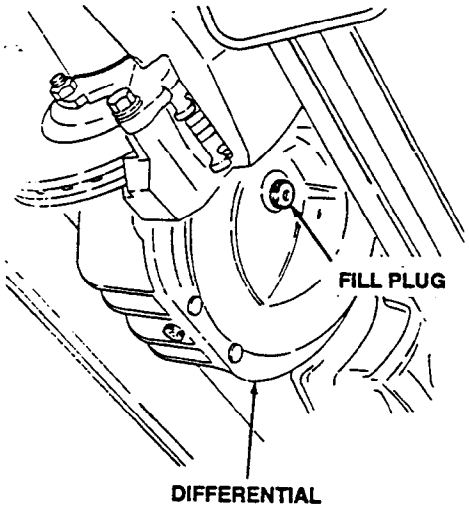	

Table 2-1. Unit Level Preventive Maintenance Checks and Services HMMWV (Cont'd).

ITEM NO.	INTERVAL	ITEM TO BE INSPECTED	PROCEDURES	NOT FULLY MISSION CAPABLE IF:
16	Semi-annually	Driveline Components (Cont'd)	**g.** Inspect U-joints for damage, free play, and missing or unserviceable lubrication fittings.	**g.** U-joint is damaged, unserviceable, or missing lubrication fitting.
			h. Tighten front prop shaft mounting capscrews to 13-18 lb-ft (18-24 N•m) and center support capscrews to 60 lb-ft (81 N•m). Tighten rear prop shaft capscrews to 30-35 lb-ft (41-47 N•m) and tighten front U-bolt nuts to 13-18 lb-ft (18-24 N•m).	**h.** Loose, missing, or broken capscrews.
			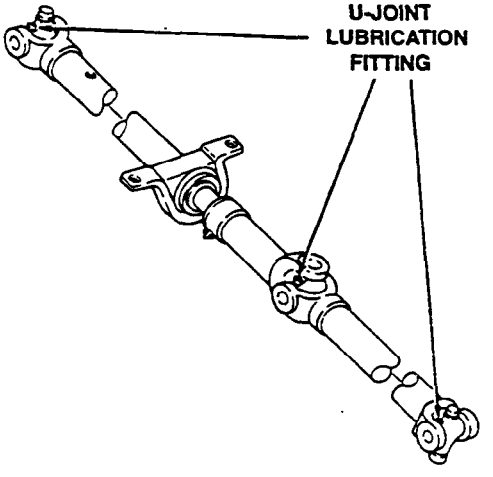 FRONT PROPELLER SHAFT UNIVERSAL AND SLIP JOINTS	
			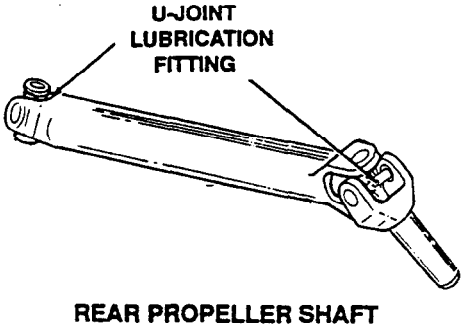 REAR PROPELLER SHAFT UNIVERSAL AND SLIP JOINTS	
			i. Tighten halfshaft mounting bolts to 48 lb-ft (65 N•m).	**i.** Loose, missing, or broken bolts.

Table 2-1. Unit Level Preventive Maintenance Checks and Services HMMWV (Cont'd).

ITEM NO.	INTERVAL	ITEM TO BE INSPECTED	PROCEDURES	NOT FULLY MISSION CAPABLE IF:
17	Semi-annually	Exhaust Components	Inspect for cracked and loose pipes, muffler, and hangers. Check for exhaust leaks.	Cracked, loose, or holes in pipes or muffler. Exhaust leak.
18	Semi-annually	Frame, Support Braces and Cross-members	**a.** Inspect frame side rails for cracks, breaks, bends, wear, deterioration, and missing or loose fasteners.	**a.** Any loose or missing fasteners. Cracks, bends, or breaks in frame.
			b. Inspect support braces and crossmembers for cracks, breaks, bends, deterioration, and loose or missing fasteners.	**b.** Any loose or missing fasteners. Cracks, bends, or breaks in crossmembers or support braces.
19	Semi-annually	Tires	**WARNING** Changing tire pressures or wheel alignment out of the recommended specification may adversely affect the vehicle's handling characteristics. Loss of vehicle control may result, causing serious injury or death to personnel and damage to equipment.	
			NOTE Vehicle must be up on jack stands for the following checks.	
			a. Check tread depth of tires with tire gauge. If tread depth is less than 1/16 in.(1.59 mm), replace tire. Radial tires will take approximately 1,300 miles (2,092 km) to wear 1/32 in. (0.79 mm). If mission will require the vehicle to travel this distance within a month, replace tire if it measures 3/32 in. (2.38 mm).	**a.** Tread depth is less than 1/16 in. (1.59 mm).

Table 2-1. Unit Level Preventive Maintenance Checks and Services HMMWV (Cont'd).

ITEM NO.	INTERVAL	ITEM TO BE INSPECTED	PROCEDURES	NOT FULLY MISSION CAPABLE IF:
19	Semi-annually	Tires (Cont'd)	**b.** Inspect tires for uneven wear and balance (para. 8-8). For normal wear, rotate tires as shown in rotation diagram. The vehicle's wheel alignment is optimally designed for GVW operation. Operating the vehicle without a load can cause excessive wear on the outer edge of the tread pattern. If this pattern develops, turn tires around on the rims (para. 8-4). **c.** Rotate tires as diagram shows. ROTATION DIAGRAM 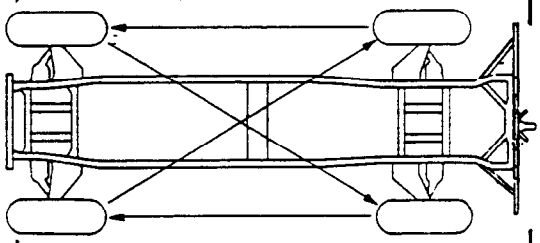	**b.** Tires exhibit excessive or uneven wear or balance.
			d. Tighten wheel lug nuts to 90-110 lb-ft (122-149 N•m) in tightening sequence shown. TIGHTENING SEQUENCE 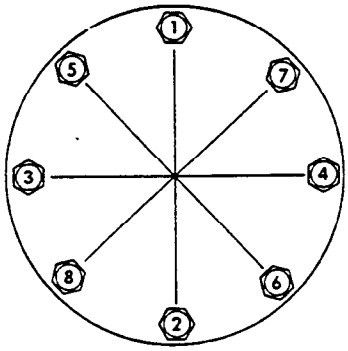 	**d.** Any broken studs, loose or missing lug nuts.

Table 2-1. Unit Level Preventive Maintenance Checks and Services HMMWV (Cont'd).

ITEM NO.	INTERVAL	ITEM TO BE INSPECTED	PROCEDURES	NOT FULLY MISSION CAPABLE IF:
19	Semi-annually	Tires (Cont'd)	**e.** Check for loose, missing, or broken wheel studs and locknuts. **CAUTION** Prior to checking torque, the tire assembly must be deflated. (1) Release air pressure from tire (para. 8-4). **CAUTION** Tighten locknuts gradually to avoid bent and broken studs, or damage to wheel components will result. (2) Tighten locknuts to 85 lb-ft (115 N•m) in sequence shown; repeat torque sequence at 125 lb-ft (170 N•m). (3) Inflate tire to recommended tire pressure (TM 9-2320-387-10). TIGHTENING SEQUENCE 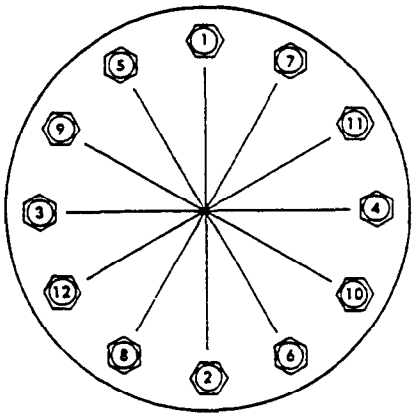 **NOTE** If vehicle is new and has been driven less than 3,000 mi (4,800 km), it is not necessary to align wheels unless abnormal handling is reported. **f.** Check alignment of front and rear wheels (paras. 8-9 and 8-10).	**e.** Any loose, missing, or broken wheel stud and locknuts. **f.** Front or rear wheels are out of alignment.

Table 2-1. Unit Level Preventive Maintenance Checks and Services HMMWV (Cont'd).

ITEM NO.	INTERVAL	ITEM TO BE INSPECTED	PROCEDURES	NOT FULLY MISSION CAPABLE IF:
20	Semi-annually	Engine	**a.** Inspect engine for leaks or damage that could cause engine failure. **b.** Change oil and filter every 3,000 mi (4,800 km) or semiannually, whichever occurs first (para. 3-5). Inspect drainplug for metal particles. **NOTE** Replace oil filter each time crankcase is drained. Fill crankcase with 8 qt (7.6 L) of engine oil. Crankcase capacity is 7 qt (6.6 L) and oil filter capacity is 1 qt (0.95 L). 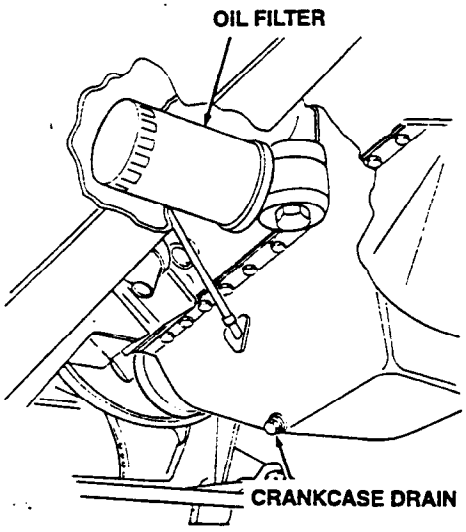 	**a.** Class III leaks. Damage evident that would cause engine failure. **b.** Metal particles are found on drainplug.
21	Semi-annually	Batteries	**WARNING** • Do not perform battery system checks or inspections while smoking or near fire, flames, or sparks. Batteries may explode causing damage to vehicle, and injury or death to personnel. • Remove all jewelry such as rings, dog tags, bracelets, etc. If jewelry or disconnected battery ground cable contacts battery terminal, a direct short will result, causing injury to personnel or damage to equipment.	

Table 2-1. Unit Level Preventive Maintenance Checks and Services HMMWV (Cont'd).

ITEM NO.	INTERVAL	ITEM TO BE INSPECTED	PROCEDURES	NOT FULLY MISSION CAPABLE IF:
21	Semi-annually	Batteries (Cont'd)	**NOTE** Refer to TM 9-6140-200-14 for more specific details on battery maintenance.	
			a. Inspect battery box for corrosion and debris.	**a.** Corrosion has made holes in metal battery box.
			b. Clean slave receptacle and coat with corrosion-resistant compound (appendix C, item 61).	**b.** Terminals corroded.
			NOTE Add 4 points (.004) to specific gravity reading for every 10° above 80°F.	
			c. Check and record specific gravity of each cell.	**c.** Cell is below 1.225 specific gravity.
			d. Inspect battery cables for frays, splits, or looseness.	**d.** Cables frayed, split, or loose.
			SPECIAL PURPOSE BODIES	
21.1	Semi-annually	Doors	Inspect door latches/strikes for proper adjustment (para. 11-9).	Doors do not seal against body.
22	Semi-annually	Cargo Shell Door	Check adjustment of cargo shell door (para. 11-15).	
23	Semi-annually	Rear Cargo Door	Check rear cargo door for proper operation. Rotate gas springs (para. 11-23) 180° every six months and move left spring to right side and right spring to left side.	
23.1	Semi-annually	Weapon Station Turret	**a.** Ensure brushes are present and are not curled upward.	**a.** Brushes are missing or curled upward more than 1/4 inch (6.34 mm).
			b. Inspect turret brake for cracked mounting bracket welds and for correct adjustment (para. 11-55).	**b.** Turret brake is misaligned or mounting bracket welds cracked.
			c. Inspect for damage or bending of stop ring notches at 0 degrees, 90 degrees, 180 degrees, and 270 degrees stop positions.	**c.** Stop rings notches will not stop at required position.

Table 2-1. Unit Level Preventive Maintenance Checks and Services HMMWV (Cont'd).

ITEM NO.	INTERVAL	ITEM TO BE INSPECTED	PROCEDURES	NOT FULLY MISSION CAPABLE IF:
			SPECIAL PURPOSE KITS	
24	Semi-annually	Vehicular Heater Components	**a.** Inspect arctic heater fuel line for loose connections, splits, cracks, and bends.	**a.** Any class III leak, loose connections, splits, cracks, and bends.
			b. Inspect coolant hoses for leaks and deterioration.	**b.** Any class III leaks. Hoses cracked or dry-rotted.
			c. Inspect electrical wires for frays, splits, or looseness.	**c.** Wires frayed, split, or loose.
			d. Inspect intake and exhaust extensions for proper installation, cracked and loose pipes.	**d.** Any exhaust extension leak.
			NOTE If annual/biennial service is being performed, then final road test will be completed after last annual/biennial task is complete.	
25	Semi-annually	Final Road Test	Check vehicle for proper operation and performance.	Vehicle fails to operate properly.
26	Annually	Fuel System	Replace filter element every 6,000 mi (9,600 km) or annually, whichever occurs first. Replace water separator element if unserviceable (para. 3-34).	

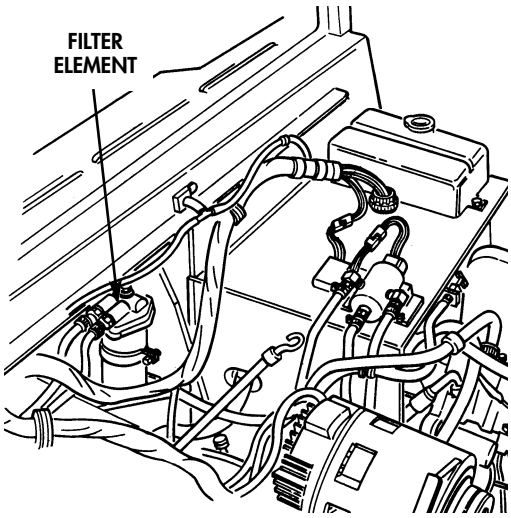

Table 2-1. Unit Level Preventive Maintenance Checks and Services HMMWV (Cont'd).

ITEM NO.	INTERVAL	ITEM TO BE INSPECTED	PROCEDURES	NOT FULLY MISSION CAPABLE IF:
27	Annually	Air-Intake System	Test CDR valve (para. 3-9).	CDR fails water manometer vacuum test.
28	Annually	Electrical Wiring	Inspect all wiring and wiring harnesses for frays, splits, missing insulation, or poor condition.	Broken, frayed, split wires or harness.
29	Biennially	Transmission	**CAUTION** Use Dexron® III for filling transmission. Failure to do so may cause damage to transmission. **NOTE** Replace transmission oil filter each time transmission is drained. Fill transmission with 7.7 qt (7.3 L) of Dexron® III. Change fluid every 12,000 mi (19,300 km) or biennially, whichever occurs first (para. 5-2). Inspect transmission drainplug for metal particles.	Metal particles are found.

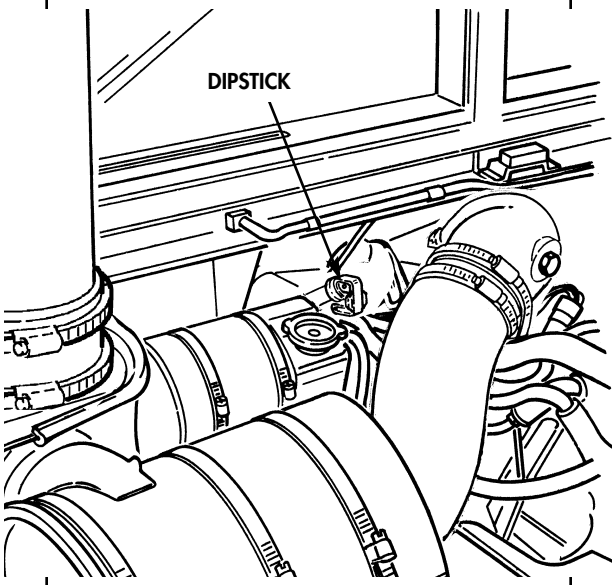

Table 2-1. Unit Level Preventive Maintenance Checks and Services HMMWV (Cont'd).

ITEM NO.	INTERVAL	ITEM TO BE INSPECTED	PROCEDURES	NOT FULLY MISSION CAPABLE IF:
30	Biennially	Transfer Case	**CAUTION** • If water or metal particles are detected during transfer case draining, notify DS maintenance before refilling transfer case. • Use Dexron® III for filling transfer case. Failure to do so may cause damage to transfer case. **NOTE** Fill transfer case with 3.35 qt (3.17 L) of Dexron® III. Change fluid every 12,000 mi (19,300 km) or biennially, whichever occurs first. Inspect drainplug for metal particles. Install drainplug and tighten to 35 lb-ft (47 N•m). Install fill plug and gasket, and tighten to 35 lb-ft (47 N•m). 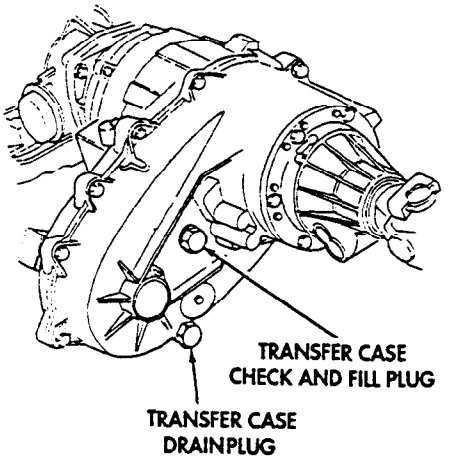 	Metal particles are found.

SEMIANNUAL (3,000 MILE) PMCS PARTS LIST

ITEM NO.	PART NUMBER	NSN	NOMENCLATURE	QTY
1.	MS51943-31	5310-00-061-4650	Locknut	1
2.	MS21245-L10	5310-00-449-2381	Locknut	4
3.	MS35756-8	5315-00-616-5526	Woodruff Key	1
4.	MS24665-355	5315-00-012-0123	Cotter Pin	1
5.	MS51943-43	5310-00-061-4651	Locknut	1
6.	MS51943-35	5310-00-935-9021	Locknut	1
7.	MS51943-39	5310-00-488-3889	Locknut	4
8.	MS51967-18	5310-00-763-8919	Locknut	2
9.	MS35338-45	5310-00-407-9566	Lockwasher	2
10.	PF1218	2940-00-082-6034	Engine Oil Filter	1
11.	5593033	5310-01-252-2999	Nut and Lockwasher Assy	4

ANNUAL (6,000 MILE) PMCS PARTS LIST

ITEM NO.	PART NUMBER	NSN	NOMENCLATURE	QTY
1.	MS51943-31	5310-00-061-4650	Locknut	1
2.	MS21245-L10	5310-00-449-2381	Locknut	4
3.	MS35756-8	5315-00-616-5526	Woodruff Key	1
4.	MS24665-355	5315-00-012-0123	Cotter Pin	1
5.	MS51943-43	5310-00-061-4651	Locknut	1
6.	MS51943-35	5310-00-935-9021	Locknut	1
7.	MS51943-39	5310-00-488-3889	Locknut	4
8.	MS51967-18	5310-00-763-8919	Locknut	2
9.	MS35338-45	5310-00-407-9566	Lockwasher	2
10.	PF1218	2940-00-082-6034	Engine Oil Filter	1
11.	5593033	5310-01-252-2999	Nut and Lockwasher Assy	4
12.	SA910044	4330-01-190-3579	Fuel/Water Filter Element Kit	1

BIENNIALLY (12,000 MILE) PMCS PARTS LIST

ITEM NO.	PART NUMBER	NSN	NOMENCLATURE	QTY
1.	MS51943-31	5310-00-061-4650	Locknut	1
2.	MS21245-L10	5310-00-449-2381	Locknut	4
3.	MS35756-8	5315-00-616-5526	Woodruff Key	1
4.	MS24665-355	5315-00-012-0123	Cotter Pin	1
5.	MS51943-43	5310-00-061-4651	Locknut	1
6.	MS51943-35	5310-00-935-9021	Locknut	1
7.	MS51943-39	5310-00-488-3889	Locknut	4
8.	MS51967-18	5310-00-763-8919	Locknut	2
9.	MS35338-45	5310-00-407-9566	Lockwasher	2
10.	PH13	2940-00-082-6034	Engine Oil Filter	1
11.	5593033	5310-01-252-2999	Nut and Lockwasher Assy	4
12.	SA910044	4330-01-190-3579	Fuel/Water Filter Element Kit	1
13.	12354864	4330-01-438-3813	Fluid Transmission Parts Kit	1

LUBRICATION TABLE

USAGE	FLUID/LUBRICANT	CAPACITIES	EXPECTED TEMPERATURE
Engine Oil (MIL-L-2104) (MIL-L-46167)	OE/HDO 30* OE/HDO 10*** OEA**	Crankcase: w/o filter 7 qt (6.6 L) w/filter 8 qt (7.6 L) Dry System 10 qt (9.5 L) (inc. oil cooler)	Above +15°F (-9°C) +40° to -15°F (+4° to -26°C) +40° to -65°F (+4° to -54°C)
Engine Coolant	Ethylene Glycol and Water 1/4 Ethylene Glycol/ 3/4 Water 2/5 Ethylene Glycol/ 3/5 Water 3/5 Ethylene Glycol/ 2/5 Water	Radiator: 5 qt (4.7 L) Complete System: 26 qt (24.6 L)	+15°F (-9°C) and above +40° to -15°F (+4° to -26°C) +40° to -65°F (+4° to -54°C)
Brake System	Fluid Silicone BFS	Master Cylinder: 1.12 pt (0.53 L) Complete System: 1.63 pt (0.78 L)	All Temperatures
Transmission	Dexron® III OEA	Dry: 13.5 qt (12.8 L) Drain & Refill 7.7 qt (7.3 L)	All Temperatures
Transfer Case	Dexron® III	3.35 qt (3.17 L)	All Temperatures
Steering System	Dexron® III	1 qt (0.95 L) w/ cooler 1.25 qt (1.18 L)	All Temperatures
Geared Hub (4)	Multipurpose Gear GO 80/90	1 pt ea (0.47 L)	All Temperatures
Axles (2)	Multipurpose Gear GO 80/90	2 qt ea (1.9 L)	All Temperatures
Ball Joints, Tie Rod Ends, Pitman Arm, Idler Arm, Propeller Shafts, etc.	GAA	As Required	All Temperatures
Hinges, Cables, and Linkages	OE/HDO	As Required	All Temperatures

*OE/HDO 15/40 (Grade 15W-40) lubricant may be used when expected temperatures are above +5°F (-15°C).
**If OEA lubricant is required to meet the temperature ranges listed in the table, then the OEA lubricant is to be used in place of OE/HDO 10 lubricant for all temperature ranges.
***If operating conditions are severe or abnormal, service chassis lubrication points at 1,000 mi. (1,600 km).

Section IV. GENERAL MAINTENANCE INSTRUCTIONS

2-13. GENERAL MAINTENANCE INSTRUCTIONS TASK SUMMARY

TASK PARA.	PROCEDURES	PAGE NO.
2-14.	Cleaning	2-30
2-15.	Inspection	2-31
2-16.	Repair	2-32
2-17.	Assembly	2-33

2-14. CLEANING

a. General Instructions. Cleaning procedures will be the same for the majority of parts and components which make up the vehicle subassemblies. General cleaning procedures are detailed in steps b through h.

b. The Importance of Cleaning. Great care and effort are required in all cleaning operations. The presence of dirt and foreign material is a constant threat to satisfactory vehicle operation and maintenance. The following will apply to all cleaning operations:

(1) Hands must be kept free of any accumulation of grease which can collect dust and grit.

(2) Clean all parts before inspection, after repair, and before assembly.

(3) After cleaning, all parts must be covered or wrapped in plastic or paper to protect them from dust and/or dirt.

c. Disassembled Parts Cleaning. Place all disassembled parts in wire baskets for cleaning.

(1) Dry and cover all cleaned parts.

(2) Place on or in racks and hold for inspection or repair.

(3) All parts subject to rusting must be lightly oiled and wrapped.

(4) Keep all related parts and components together. Do not mix parts.

WARNING

Improper cleaning methods and use of unauthorized cleaning solutions may injure personnel and damage equipment. Refer to TM 9-247 for correct information.

d. Castings.

(1) Clean inner and outer surfaces of castings and all areas subject to grease and oil with cleaning solvents. Refer to TM 9-247.

(2) Use a stiff brush to remove sludge and gum deposits.

WARNING

Compressed air used for cleaning purposes will not exceed 30 psi (207 kPa). Use only with effective chip guarding and personal protective equipment (goggles/shield, gloves, etc.).

(3) Use compressed air to blow out all tapped capscrew holes and dry castings after cleaning.

2-14. CLEANING (Cont'd)

e. Oil Passages. Particular attention must be given to all oil passages in castings and machined parts. Oil passages must be clean and free of any obstructions.

(1) Clean passages with wire probes to break up any sludge or gum deposits.

(2) Wash passages by flushing with solvents. Refer to TM 9-247.

(3) Dry passages with compressed air.

CAUTION

Do not allow solvents to come in contact with seals, cables, or flexible hoses. These cleaners cause leather, rubber, and synthetic materials to dry out, rot, and lose pliability, making them unserviceable.

f. Nonmetallic Parts. Clean hoses and other nonmetallic parts with soap and water.

g. Bearings.

WARNING

Do not use compressed air to dry bearings. Spinning a dry bearing with compressed air may cause injury to personnel or damage to equipment.

(1) Bearings require special cleaning. After removing surface oil and gum deposits, place bearings in hot oil, 140°F (60°C), to loosen congealed oil and grease. Wipe bearings dry with a lint-free cloth; do not use compressed air.

(2) See TM 9-214 for information and care of bearings.

h. Electrical Components

(1) Clean electrical components with clean cloth dampened with drycleaning solvent. Care must be taken not to damage protective insulation.

WARNING

Compressed air used for cleaning purposes will not exceed 30 psi (207 kPa). Use only with effective chip guarding and personal protective equipment (goggles/shield, gloves, etc.).

(2) Use compressed air to dry electrical components.

2-15. INSPECTION

a. General Instructions. Procedures for inspections will be the same for many parts and components which make up the vehicle subassemblies. General procedures are detailed in steps b through k. Dimensional standards for parts have been fixed at extremely close tolerances, so use specification tables. Use specified inspection equipment for inspection where cracks and other damage cannot be spotted visually. Exercise extreme care in all phases of inspection. Repair or replace all unserviceable components (para. 2-16).

b. Castings.

(1) Inspect all ferrous and nonferrous castings for cracks. See MIL-STD-6866, Inspection, Penetrant Methods. Particularly check areas around studs, pipe plugs, threaded inserts, and sharp corners. Replace cracked castings.

(2) Inspect machined surfaces for nicks, burrs, and raised metal. Mark damaged areas for repair or replacement.

(3) Inspect all pipe plugs, pipe plug openings, capscrews, and capscrew openings for damage and stripped threads. Replace if damaged or threads are stripped.

(4) Check all gasket mating surfaces, flanges on housings, and supports for warpage with a straight-edge or surface plate. Inspect mating flanges for discolorations which may indicate leakage. Replace if warped.

(5) Check all castings for conformance to applicable repair standards.

2-15. INSPECTION (Cont'd)

c. Bearings. Check all bearings for conformance to applicable repair standards. Refer to TM 9-214.

d. Bushings and Bushing-Type Bearings.

(1) Check all bushings and bushing-type bearings for secure fit, evidence of heating, wear, burrs, nicks, and out-of-round condition.

(2) Check for dirt in lubrication holes or grooves. Holes and grooves must be clean and free from damage.

e. Machined Parts.

(1) Check machined parts for cracks, distortion, and damage.

(2) Check all surfaces for nicks, burrs, and raised metal.

f. Studs, Bolts, Capscrews, and Nuts. Replace if bent, loose, stretched, or threads are damaged.

g. Gears.

NOTE

When gear teeth wear limits are not established, good judgment is required to determine if gear replacement is necessary.

(1) Inspect all gears for cracks and missing teeth. Replace if cracked or teeth are missing.

(2) Inspect gear teeth for wear, sharp fins, burrs, and galled or pitted surfaces.

(3) Inspect splines for wear, burrs, and galled or pitted surfaces.

(4) Check keyway slots for wear and/or damage.

h. Oil Seals. Oil seals are mandatory replacement items.

i. Casting Plugs. Inspect for leakage. Replace plugs when leakage is present.

j. Springs. Inspect for damaged, distorted, and collapsed coils.

k. Snaprings, Retaining Rings, and Washers. Many of these parts are mandatory replacement items. Inspect all others for obvious damage.

2-16. REPAIR

a. General Instructions. Repair of most parts and components is limited to general procedures outlined in applicable maintenance instructions and the following detailed procedures b through g.

CAUTION

Repaired items must be thoroughly cleaned to remove metal chips and abrasives to prevent them from entering working parts of vehicle components.

b. Castings.

(1) All cracked castings will be replaced.

(2) Only minor repairs to machined surfaces, flanges, and gasket mating surfaces are permitted. Remove minor nicks, burrs, and/or scratches by:

(a) Using fine mill file.

(b) Using abrasive cloth dipped in cleaning solvent.

(c) Lapping across a surface plate.

(d) Remachining of machined surfaces to repair damage, warpage, or uneven surfaces is not permitted. Replace castings.

(3) Repair damaged threaded pipe plug and/or capscrew holes with a thread tap, or repair oversize holes with threaded inserts.

2-16. REPAIR (Cont'd)

c. Bearings. See TM 9-214.

d. Studs. Replace all bent and stretched studs. Repair minor thread damage with a thread restorer file. Replace studs having stripped or damaged threads as outlined below:

(1) Remove using a stud remover. Back studs out slowly to avoid heat buildup and seizure which can cause stud to break off.

(2) If studs break off too short to use a stud remover, use extractor to remove.

(3) Replacement studs have a special coating and must have a small amount of antiseize compound (appendix C, item 16) applied on threads before stud is installed. Install replacement stud slowly to prevent heat buildup and snapping off.

e. Gears.

(1) Remove gears using pullers, as required.

(2) Use the same methods described in procedure b, step 2 for castings to remove minor nicks, burrs, or scratches on gear teeth.

(3) If keyways are worn or enlarged, replace gear.

f. Bushings and Bushing-Type Bearings. When bushings and bushing-type bearings seize to a shaft and spin in the bore, the associated part must also be inspected and replaced, as required.

g. Oil Seals.

(1) Remove oil seals being careful not to damage casting or adapter bore.

(2) Always install new seal in bore using proper seal-replacing tool.

2-17. ASSEMBLY

a. Cleanliness is essential in all component assembly operations. Dirt and dust, even in minute quantities, are abrasive. Parts must be cleaned as specified, and kept clean. Wrap or cover parts and components when assembly procedures are not immediately completed.

b. Coat all bearings and contact surfaces with operating oil (differential oil for differential parts, transmission oil for transmission parts, etc.) to ensure lubrication of parts during initial operation after repair.

Section V. ELECTRICAL/MECHANICAL SYSTEMS TROUBLESHOOTING

2-18. GENERAL

a. This section provides information to diagnose and correct malfunctions of the electrical/mechanical system.

b. Principles of operation showing system operation can be found in chapter 1. It should be used as a reference when performing electrical/mechanical troubleshooting.

c. Each malfunction symptom given for an individual component or system is followed by step(s) you should take to determine the cause and corrective action you must take to remedy the problem.

d. Before taking any action to correct a possible malfunction, the following rules should be followed:

(1) Question operator to obtain any information that might help determine the cause of the problem.

(2) Never overlook the chance that the problem could be of simple origin. The problem could be corrected with minor adjustment.

(3) Use all senses to observe and locate troubles.

2-18. GENERAL (Cont'd)

(4) Use test instruments or gauges to help determine and isolate problem.

(5) Always isolate the system where the malfunction occurs and then locate the defective component.

(6) Use standard automotive theories and principles when troubleshooting the vehicles covered in this manual.

e. The STE/ICE-R is an integral part of these troubleshooting procedures. It should be used whenever possible, although other options are given when available. The Vehicle Identification Number (VIN) assigned to the ECV vehicles is 21 (14 is the temporary VIN). On page 2-557, you will find information on STE/ICE-R description and operation. Use this information to become familiar with STE/ICE-R operation and the equipment contained in the test set. On page 2-537, you will find STE/ICE-R setup and internal checks. These must be performed prior to performing tests.

2-19. ELECTRICAL/MECHANICAL SYSTEMS TROUBLESHOOTING

ELECTRICAL/MECHANICAL TROUBLESHOOTING

PARA. NO.		PAGE NO.
2-20.	How to use this troubleshooting guide	2-36
2-21.	Glossary of abbreviations and commonly used terms	2-42
2-22.	Electrical circuit description	2-43
2-23.	Startability tests	2-45
2-24.	Engine running tests	2-51
2-25.	Cooling system tests	2-61
2-26.	Lubrication system tests	2-69
2-27.	Electrical tests	2-75
2-28.	Fuel system tests	2-99
2-29.	Air intake/exhaust tests	2-141
2-30.	Compression/mechanical tests	2-147
2-31.	Engine cooling tests	2-159
2-32.	Engine lubrication tests	2-191
2-33.	Alternator tests	2-199
2-34.	Protective control box tests	2-213
2-35.	Battery circuit tests	2-237
2-36.	Starter circuit tests	2-247
2-37.	Glow plugs circuit tests	2-289
2-38.	Instruments tests	2-305
2-39.	Lights tests	2-375
2-40.	Transmission system tests	2-385
2-41.	Brake system tests	2-419
2-42.	Steering system tests	2-433
2-43.	Drivetrain tests	2-453
2-44.	Winch system tests	2-471
2-45.	DCA troubleshooting	2-479
2-46.	STE/ICE-R test procedures	2-489
2-47.	Vehicle testing	2-517

2-20. HOW TO USE THIS TROUBLESHOOTING GUIDE

NOTE TO THE RECIPIENT OF THIS MANUAL

There are 15 foldouts that are supplied with this manual. Take the foldouts and place them after the last page of diagnostics at the end of the paragraph. The foldout will then be with diagnostics for that system. Use the cross-reference information listed below to guide you in the placement of the foldouts.

SYSTEM LEVEL TESTS	PARAGRAPH	FOLDOUT NUMBER
FUEL	2-28	FO-1
AIR INTAKE/EXHAUST	2-29	FO-2
COMPRESSION/MECHANICAL	2-30	FO-3
ENGINE COOLING	2-31	FO-4
ENGINE LUBRICATION	2-32	FO-5
ALTERNATOR	2-33	FO-6
PROTECTIVE CONTROL BOX	2-34	
BATTERY CIRCUIT	2-35	FO-7
STARTER CIRCUIT	2-36	FO-8
GLOW PLUGS	2-37	FO-9
INSTRUMENTS	2-38	FO-10
LIGHTS	2-39	FO-11
TRANSMISSION	2-40	
BRAKES	2-41	FO-12
STEERING	2-42	FO-13
DRIVETRAIN	2-43	FO-14
WINCH SYSTEM	2-44	
DCA TROUBLESHOOTING	2-45	FO-15

2-20. HOW TO USE THIS TROUBLESHOOTING GUIDE (CONT'D)

THERE ARE 5 TOP LEVEL TESTS. USE THESE FOR GENERAL SYMPTOMS (HARD TO START, RUNS ROUGH, ETC).

THERE ARE 18 SYSTEM LEVEL TESTS. THESE ARE USED BY THE TOP LEVEL TESTS BUT YOU CAN GO STRAIGHT TO THEM IF YOU KNOW WHAT YOU'RE DOING.

TROUBLESHOOTING PAGES. THE LAYOUT IS SHOWN ON THE NEXT PAGE. THEY ARE SET UP SO THAT YOU DON'T READ ANY MORE THAN YOU HAVE TO. AFTER YOU HAVE FOUND THE FAULT, CORRECT IT AND MAKE SURE THE SYSTEM IS WORKING PROPERLY. CONTINUE IF THERE ARE ADDITIONAL PROBLEMS.

TOP LEVEL TESTS	PAGE
STARTABILITY	2-45
ENGINE RUNNING	2-51
COOLING	2-61
LUBRICATION	2-69
ELECTRICAL	2-75

SYSTEM LEVEL TESTS	PAGE
FUEL	2-99
AIR INTAKE/EXHAUST	2-141
COMPRESSION/MECHANICAL	2-147
ENGINE COOLING	2-159
ENGINE LUBRICATION	2-191
ALTERNATOR	2-199
PROTECTIVE CONTROL BOX	2-213
BATTERY CIRCUIT	2-237
STARTER CIRCUIT	2-247
GLOW PLUGS CIRCUIT	2-289
INSTRUMENTS	2-305
LIGHTS	2-375
TRANSMISSION	2-385
BRAKES	2-419
STEERING	2-433
DRIVETRAIN	2-453
WINCH	2-471
DCA TROUBLESHOOTING	2-479

2-20. HOW TO USE THIS TROUBLESHOOTING GUIDE (CONT'D)

PAGE LAYOUT

All diagnostic logic and flowcharts are on the left-hand page, with supporting information, help, test, instructions, and vehicle operation on the right.

Question number, so you know where you are and where to go when entering or leaving a test chain.

Question to be answered.

Notes, warnings, and cautions about a particular question.

Instructions for how to perform a test or make a measurement, usually in a box.

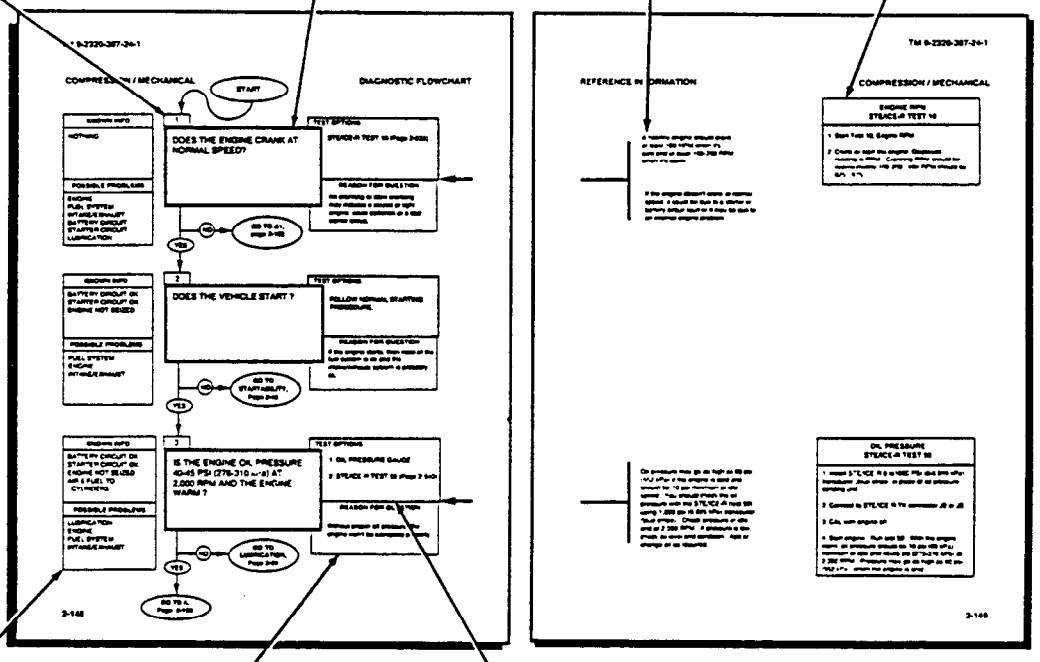

Known info and possible problems with the system.

Reason for question: This is to help by telling you why it's being asked. This is especially helpful when something's 'just a little bit bad' and you're not sure if it passed or failed.

Test options: Multiple choice of methods you can use to obtain the answer to the question.

DIAGNOSTIC FLOWCHART

REFERENCE INFORMATION

HOW TO TROUBLESHOOT

PICK THE TESTS: Select either a top level or a system level test.

DIAGNOSTIC PROCEDURE: Just answer the questions on the left-hand page and follow the YES or NO path. Helpful information about the question is also on the right-hand page. If you aren't sure about a question or procedure, look on the right page for notes, instructions, and help.

2-20. HOW TO USE THIS TROUBLESHOOTING GUIDE (CONT'D)

PAGE LAYOUT

Diagnostic logic is on the left-hand page.

Related and helpful information is on the right-hand page.

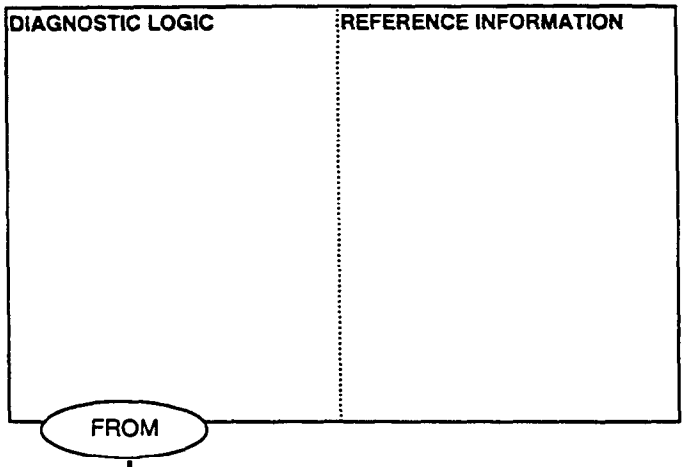

DIAGNOSTIC PROCEDURE

Just answer the questions on the left-hand page. Follow the YES or NO path to the next step. Everything else on both pages is information to support the question. As a rule, the most important information (warnings, cautions, etc.) is closest to the question; less important information is farther away.

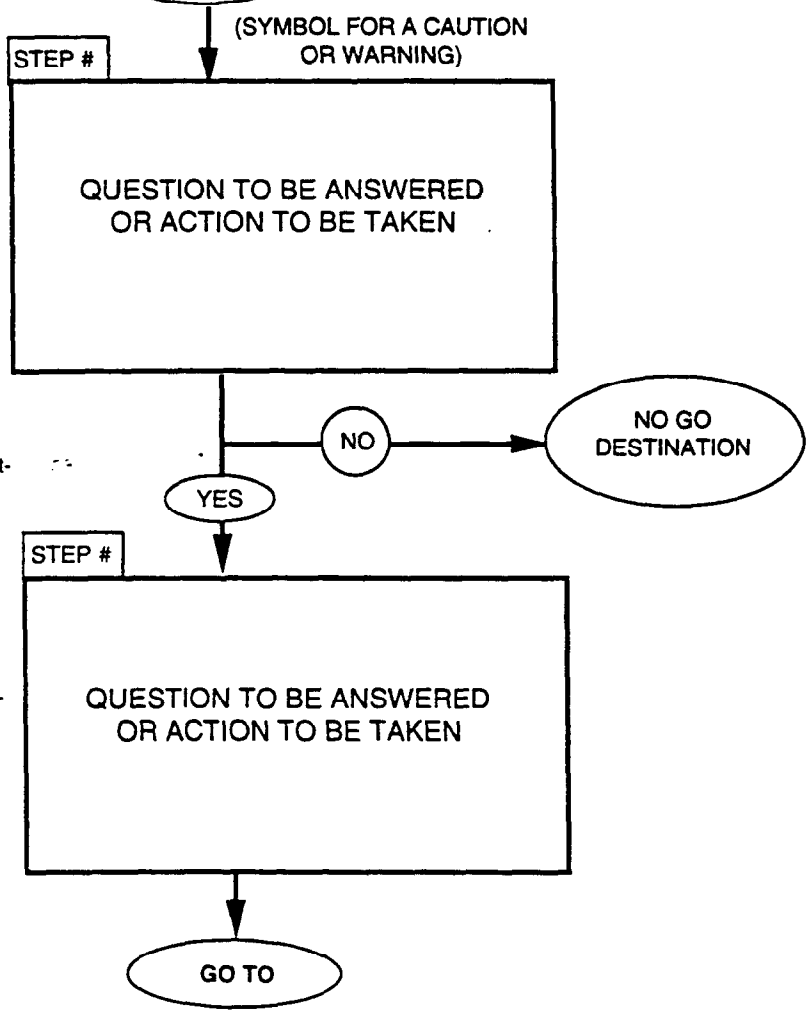

Is the symbol for a WARNING statement. If you see this symbol above a question, look on the right-hand page for the text of the message. The WARNING message on the right-hand page will also have the symbol above it.

Is the symbol for a CAUTION statement. If you see this symbol above a question, look on the right-hand page for the text of the message. The CAUTION message on the right-hand page will also have the symbol above it.

2-20. HOW TO USE THIS TROUBLESHOOTING GUIDE (CONT'D)

INFORMATION ABOUT THE QUESTION

TEST OPTIONS:

This box lists at least one way of getting the answer to the question. When there is more than one way to get the answer, the different options will be given. Usually the easiest or best option is first.

REASON FOR QUESTION:

If you know why the question is being asked, it should be easier to understand the diagnostic logic and easier to answer the question. This is especially helpful when a measurement is just a little bad. Knowing why the question is being asked should help you decide if the answer should be YES or NO.

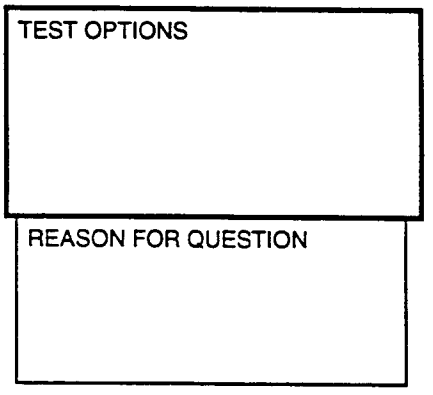

INFORMATION ABOUT THE DIAGNOSTIC LOGIC

KNOWN INFO:

This box indicates what is known about the vehicle's condition. As you follow a test chain, parts will be listed here after they have checked ok. Sometimes this box will indicate a fault that you know exists, such as a shorted or open circuit, or a component that doesn't work. DO NOT USE THIS BOX TO PICK A JUMP-IN POINT. ALWAYS RUN A COMPLETE CHAIN WHEN INSTRUCTED TO DO SO.

POSSIBLE PROBLEMS:

This box is the opposite of KNOWN INFO. Possible causes of the problem are listed here until tested and shown to be ok.

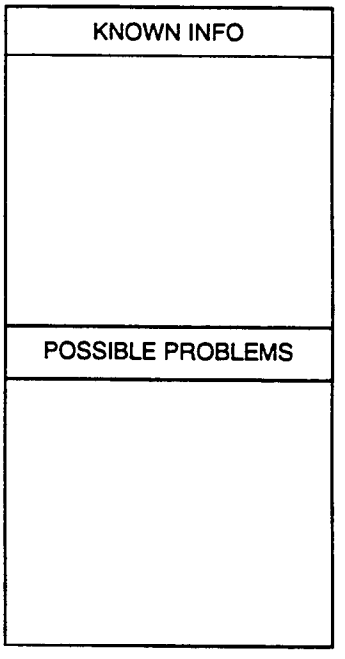

2-20. HOW TO USE THIS TROUBLESHOOTING GUIDE (CONT'D)

INFORMATION ABOUT THE QUESTION

All warnings and cautions are given next to (or as close as possible to) the arrow pointing to the particular question. Look for the symbol that is in the box for the question in order to locate the particular note. Helpful notes, test procedures, or other information related to the question are provided here. These notes are provided as supporting information only; you don't usually need them to answer the question. The more skilled you become, the less you'll have to read these.

Any cross references to other manuals will be located in this area.

NOTES, WARNINGS, AND CAUTIONS ARE IN BOLDFACE TYPE.

Additional information, notes, and/or suggestions are in normal type so as not to draw too much attention.

TEST PROCEDURES

These are special notes about how to make measurements with the test equipment. Ocassionally, if space is limited on a page, the easiest procedure will be listed with a page reference for the other procedures if you would rather use them. The procedures presume a basic working knowledge of the equipment to be used, but references are included for the less experienced operator.

TYPE OF MEASUREMENT TYPE OF EQUIPMENT
Procedure for performing the measurement using the type of equipment listed above.

PICTURES

The pictures are supposed to make it easier to find what you're looking for, such as a pin in a connector or a particular wire or component.

PICTURES ARE PROVIDED WHEREVER POSSIBLE.

2-21. GLOSSARY OF ABBREVIATIONS AND COMMONLY USED TERMS

PCB - Protective Control Box, located on the firewall above the brake pedal.

STE/ICE-R - Simplified Test Equipment for Internal Combustion Engines - Reprogrammable, a testing system used for performing tests and measurements on the vehicle. In addition to acting as a conventional digital multimeter to measure voltage, current, and resistance, it is also capable of measuring pressure, speed, compression unbalance, engine power, and some specialized battery and starter evaluations. It is powered from the vehicle batteries. The complete system includes a vehicle test meter (VTM), a transducer kit (TK), cables, transit case, and technical publications.

DCA - Diagnostic Connector Assembly, an electrical harness on the vehicle which allows the STE/ICE-R to be powered and to make measurements of key vehicle signals from a single connection. In addition to many basic electrical signals such as starter voltage and current, it includes engine speed and fuel supply pressure. The STE/ICE-R can make TK measurements at the same time that it is connected to the DCA.

VTM - Vehicle Test Meter, a box which performs the measurement and analysis functions of the STE/ICE-R systems.

TK (and TK mode) - Transducer Kit, a collection of transducers, adapters, and fittings which permit the STE/ICE-R to be used as a general purpose measurement system for any application. This allows the STE/ICE-R to be used anywhere that you want to measure voltage, current, resistance, pressure, or speed. TK mode of operation is what you are doing when you use this kit (as opposed to DCA mode where you are using the vehicle's built-in sensors to make measurements).

Compression unbalance - A STE/ICE-R test that gives an indication of any engine cylinders that have lower compression then the average. It does this by monitoring the battery voltage during cranking. As each cylinder goes into compression, the extra load on the starter shows up as a drop in voltage. This works well for finding one or more cylinders that have a compression problem, but don't forget that it doesn't give the average compression. If all cylinders are low by the same amount, this test doesn't find it.

Troubleshooting - The process of making measurements and observing the operation of the vehicle to find out if anything is wrong with it and then to locate any problem that exists.

Diagnostics - Troubleshooting by following an exact procedure.

Test Chain - A series of tests to be followed in a particular order or sequence. It is referred to as a "chain" of tests because they are all connected one after another like the links of a chain.

System - A collection of devices which are all related to each other because they depend on each other to do some function or job. For instance, the function of the fuel system is to inject fuel into the cylinders at the correct time in the correct amount and with the correct quality. The collection of devices that are required to do this include the fuel pump, fuel lines, lift pump, fuel filter, injection pump, and injectors.

2-21. GLOSSARY OF ABBREVIATIONS AND COMMONLY USED TERMS (CONT'D)

Functional flow schematic - A diagram which is much like a normal electrical circuit diagram, except that its purpose is to show the flow of information through the system (or the flow of a signal or the flow of some material such as the fuel). This kind of diagram shows how each component or device depends on the others. It is called functional flow because it shows the function (purpose of each component) and how the output of one component flows into the next. For troubleshooting, the functional flow schematic is better than the usual circuit diagram because it allows you to quickly see how the system works and what to expect when you make measurements on a system that has faults. You can't expect the output of a device to be good when it has a bad input.

2-22. ELECTRIC CIRCUIT DESCRIPTION

An electrical circuit is a collection of electrical devices which are connected in a loop from a positive voltage source (the battery positive) to a negative source (the battery negative). It must be continuous, with no breaks (no opening in the loop) so that electrical current can flow from the positive to the negative. You can think of it like the plumbing in your house. There must be a source of water under pressure or nothing will flow through the pipes. Water pressure is like the positive voltage of the battery. There may be branches (tees) in the pipes going to several different places, but if you don't connect the pipes, you don't get water. The same thing is true with the electrical circuit. If the wires aren't connected, no electricity will flow through them.

In the plumbing of a house, all of the water must go to the drain (you won't permit it to be spilled on the floor). With the vehicle electrical circuit, the drain is the negative terminal of the battery. With the water pipes, the water always flows from high pressure to low pressure (another way of saying that water always flows downhill). The electrical current is the same as the water flow - it always goes from positive to negative voltage. Voltage is to electricity what pressure is to water. Just like the pressure in the water pipe, the greater the voltage, the more electricity will flow through the wires. Unlike the water pipes that will spill the water if they break, you can't spill the electricity. The closest thing to this in an electrical circuit is when two wires touch that aren't supposed to and the current flows to some place that it shouldn't (this is called a short circuit or a short). Shorts often happen where the wire touches the vehicle body (the body is connected to the negative terminal of the battery). Since the current always flows through the easiest path to negative, it will bypass the rest of the circuit where it was supposed to go, and go through the short directly to the battery. Because this new path to the battery negative is shorter, the malfunction is called a short circuit or a short.

If you put a valve in a water pipe, you can control how much water flows by closing the valve. What you are doing is pinching off the pipe with the valve which restricts the flow. If you shut it off completely, you can stop all water from flowing. In the electrical circuit, a resistor acts like a valve. If you make the resistor extremely large, you can stop the current from flowing. The resistance is measured in ohms.

2-22. ELECTRIC CIRCUIT DESCRIPTION (CONT'D)

When there is no electrical connection, such as when a wire is disconnected, the resistance is infinite (too large to be measured). No current will flow through the wires, because the circuit is no longer continuously connected. This is referred to as an open circuit or simply an open. Remember that an electrical circuit is formed by continuous loops of devices connected together. When you are troubleshooting, you are often asked to check for continuity, which simply means that you need to find out if there is a continuous path from one place in the circuit to another. Since you are trying to see if the path is continuous, you must check wires and switches rather than any special or active devices. You will usually just measure the resistance between two points. If the resistance is zero (or the value of any resistance that is supposed to be there), then there is continuity. In the case of looking for a short, this may mean that you have found the short. If the resistance is off-scale on the meter (infinite resistance) then there is no connection and you have found an open. A continuity test is the same whether you are looking for an open or a short, the only difference being what resistance values you are looking for and where you make the measurements.

You are familiar with the typical light switch which allows you to turn a light on and off. A switch of any kind in an electrical circuit is simply a way of opening the loop so that no current will flow through it. Something to remember while troubleshooting is that everything on the positive side of the switch still has full battery voltage while everything from the switch on through the rest of the circuit is (or should be) connected to the battery negative terminal and you will measure zero volts. This is easy to remember if you think of the faucet on a sink. If you shut off the faucet, there is no water flowing into the sink, but the water in the pipe is still under pressure.

Sometimes a switch is turned on and off automatically. An example is a circuit breaker, which is a device that measures how much current is flowing through it. If the current goes too high (possibly damaging equipment or melting the wires), then it opens an internal switch to stop the current flow. A relay is another form of switch that is turned on and off under remote control using a signal in another wire. When a device which requires a very large amount of current (such as the starter motor) must be turned on and off, a power relay is used. The idea is to use a small switch to turn on a larger switch. Thus, you don't have very large wires going all over the vehicle or large switches on the instrument panel. In the case of the starter's power relay, it is also called a solenoid. A solenoid is any device that changes the electrical current into a forward and backward motion. It is something like an electrical motor except that instead of continuously going around in the same direction, it goes in or out. For the starter, the solenoid is used to push a very large switch into the ON position.

When testing a circuit, you will need to know how much current is flowing. Current is easily measured with the STE/ICE-R. A device called a shunt is connected to the negative terminal of the battery. A shunt is a very precise resistor designed so that for every 1,000 amps of current that flow through it, there is a drop of .1 volt from one side to the other (different shunts may have different values). By measuring the voltage across the shunt, you know how much current is flowing through the circuit. The shunt is placed on the negative side because it is safer (less chance of accidents which may short out the batteries). Since all of the current eventually goes through the negative battery terminal anyway, the shunt gives the same measurement as if it were connected to the positive terminal. You can think of the shunt as doing the same thing as the water meter in your house. As you turn devices such as lights on or off, you can use the shunt to measure how much current they are using.

2-23. STARTABILITY TESTS

This is a top level test for problems with an engine that doesn't start, or starts but immediately stops, or is very hard to start. If the engine starts but doesn't run well after starting, try the STARTABILITY tests first.

FOR THE ENGINE TO START, ALL OF THE BASIC SYSTEMS SHOWN BELOW MUST BE WORKING. THESE STARTABILITY TESTS WILL HELP YOU TO VERIFY THE CONDITION OF EACH OF THESE SYSTEMS.

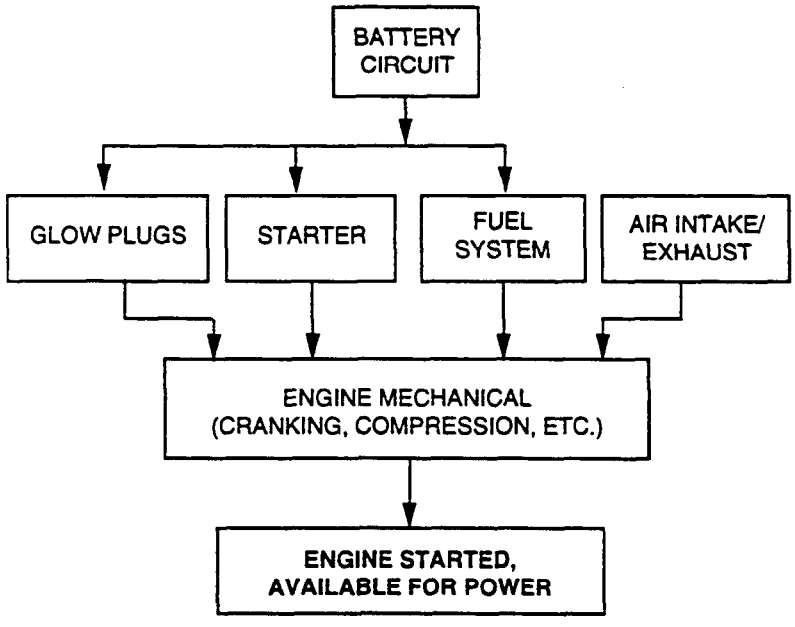

A functional flow schematic is not applicable to this section. However, so that you may refer to sections as you need them, a quick index to the systems required for starting is given here.

PARAGRAPH	PAGE
BATTERY CIRCUIT	2-237
GLOW PLUGS CIRCUIT	2-289
STARTER CIRCUIT	2-247
FUEL SYSTEM	2-99
AIR INTAKE/EXHAUST	2-141
COMPRESSION/MECHANICAL	2-147

STARTABILITY

DIAGNOSTIC FLOWCHART

START

1

DOES THE ENGINE CRANK NORMALLY? (STARTER ENGAGES, CRANKS ENGINE AT LEAST 100 RPM, STARTER DISENGAGES)

KNOWN INFO

NOTHING

POSSIBLE PROBLEMS

STARTER SYSTEM
BATTERIES
FUEL SYSTEM
AIR INTAKE/EXHAUST
GLOW PLUGS
ENG MECHANICAL

TEST OPTIONS

1. LISTEN.
2. STE/ICE-R TEST 10 (Page 2-490)

REASON FOR QUESTION

If the engine cranks normally, the battery and starter are good enough to start the engine.

NO → GO TO STARTER CIRCUIT, Page 2-247

YES

2

RUN THE FUEL SYSTEM TESTS. RETURN HERE.

KNOWN INFO

STARTER SYSTEM OK
BATTERIES OK
ENGINE NOT LOCKED

POSSIBLE PROBLEMS

FUEL SYSTEM
AIR INTAKE/EXHAUST
GLOW PLUGS
COMPRESSION

TEST OPTIONS

FUEL SYSTEM TESTS (Page 2-99)

REASON FOR TESTS

If the fuel system doesn't work, the vehicle won't start.

3

RUN THE AIR INTAKE/EXHAUST TESTS. RETURN HERE.

KNOWN INFO

ENGINE NOT LOCKED
BATTERIES OK
STARTING SYSTEM OK
FUEL SYSTEM OK

POSSIBLE PROBLEMS

AIR INTAKE/EXHAUST
COMPRESSION
GLOW PLUGS

TEST OPTIONS

AIR INTAKE/EXHAUST TESTS (Page 2-141)

REASON FOR TESTS

The air intake/exhaust system tests are easy to run and can cause starting problems.

GO TO 4, Page 2-48

REFERENCE INFORMATION

STARTABILITY

Make sure all of the vehicle's fluids are at the proper level.

You could still have battery or starter problems with a cranking speed over 100 rpm, but that shouldn't stop the engine from starting. Tests for the battery and starter can be run separately, if you want to run them.

ENGINE RPM STE/ICE-R TEST 10
1. Start Test 10, Engine RPM 2. Crank or start the engine. Displayed reading is RPM. Cranking rpm should be approximately 100-200. Idle rpm should be 700-750.

STARTABILITY

DIAGNOSTIC FLOWCHART

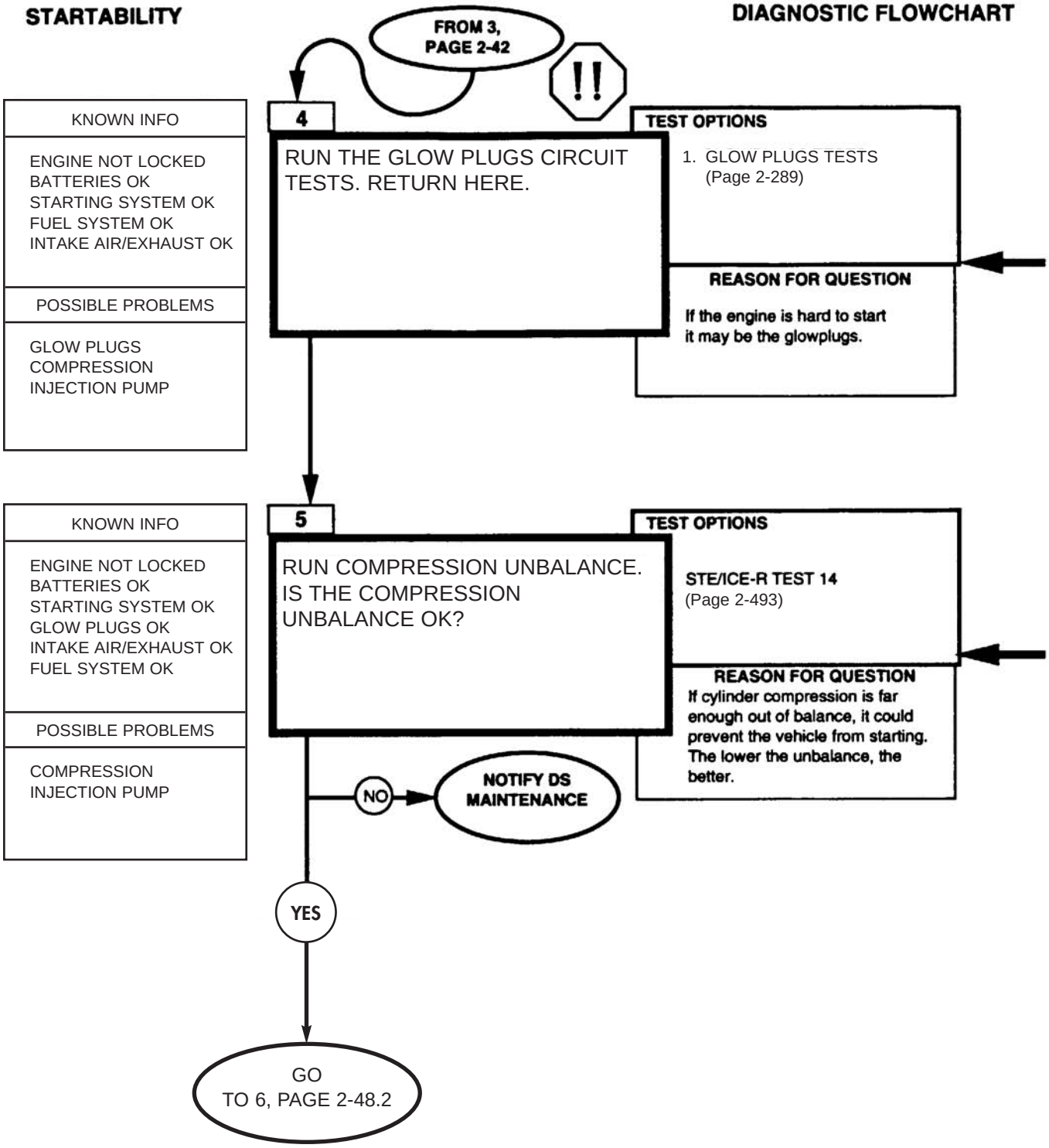

WARNING

A HOT ENGINE MAY CAUSE SERIOUS BURNS. Always use caution when approaching a hot engine.

NOTE

When using the vehicle's temperature gage to determine engine temperature, don't forget to turn the rotary switch to "RUN". The gages don't work when power is off.

The colder the engine (and air temperature), the more you need the glow plugs for starting. There are some times when you don't need to run the glow plugs test. If the engine is warm and the problem is there on a hot day, then the problem is probably NOT the glow plugs or cold start advance, and these tests may be bypassed. If it's colder than 50°F, run the glow plugs test, because just a few bad glow plugs can make a minor starting problem much worse.

If the vehicle passes the STE/ICE-R compression unbalance test, it may still have a compression problem, but it would mean that every cylinder has low compression. This is possible, but not too likely. If you're confident that everything else is working properly, notify DS maintenance.

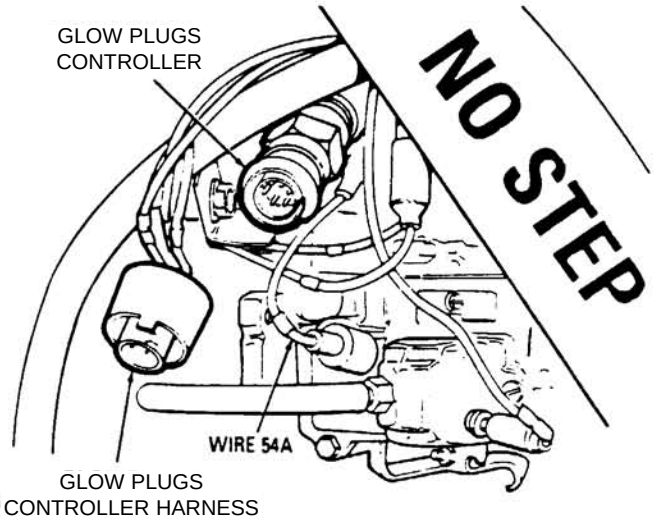

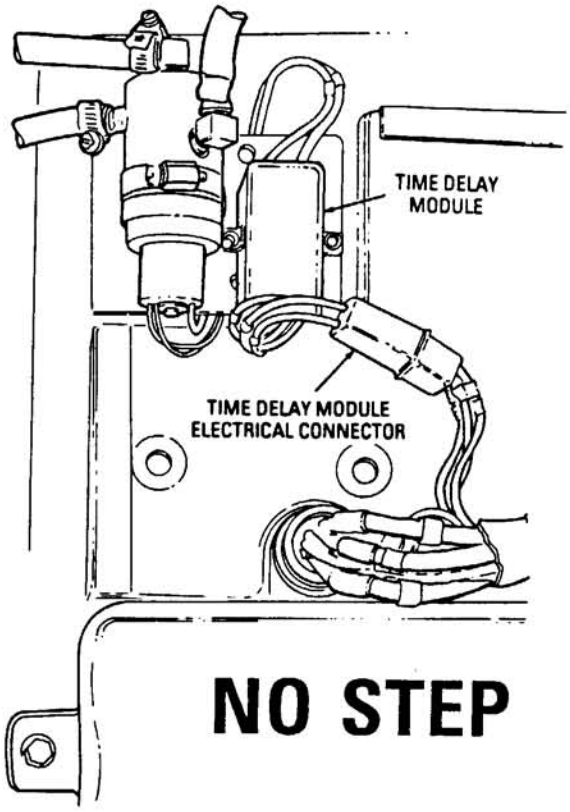

COMPRESSION UNBALANCE STE/ICE-R TEST 14

1. Run tests 72,73 and 74 to verify that the batteries are OK.

CAUTION

THE GLOW PLUGS CONTROLLER AND THE CONTROL VALVE ELECTRICAL CONNECTOR MUST BE DISCONNECTED PRIOR TO TUNNING THIS TEST.

2. Disconnect wire 54A at injection pump to prevent starting.
3. Disconnect glow plugs controller and control valve electrical connector. (to keep waveform clean).
4. Start Test 14, compression unbalance.
5. Wait for the GO message. Crank the engine.
6. Release the rotary switch when the VTM displays OFF. A number less than 25% is passing.

STARTABILITY DIAGNOSTIC FLOWCHART

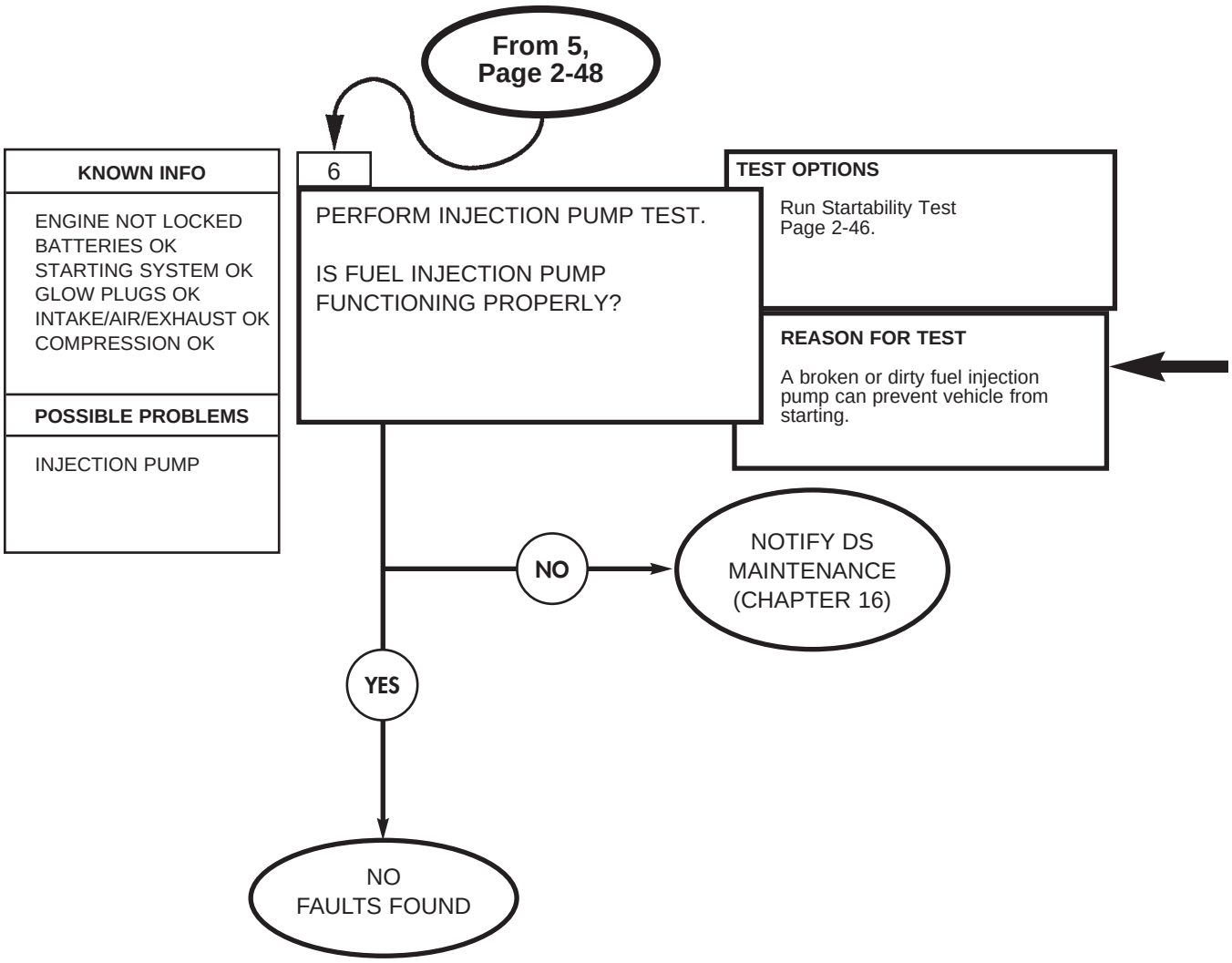

During high temperature and humidity, early model vehicles can experience difficulty starting while using JP-8 fuel. High temperatures can cause restrictive clearances in some older fuel injection head and rotor assemblies. The engine must be allowed to cool to allow adequate clearance of the pumping plungers to ensure adequate fuel delivery for starting. If this condition persists, run the startability tests. If vehicle passes all startability tests and troubleshooting procedures and still experiences difficulty in hot starting, identify the fuel injection pump and serial numbers.

All fuel injection pumps with P/N DB2831-5209 incorporated the improved head and rotor assembly, P/N 31506. If your serial number is less than shown in the Serial Number Break Column of the table below, the manufacturer recommends the fuel injection pump to be replaced, tagged as a “no hot restart” condition, and forward for rebuild. Notify direct support maintenance.

Model Pump P/N (NSN)	Serial Number Break	Original P/N	New P/N (NSN)
DB2831-5079 (2910-01-434-8597)	776848 96 thru 98	29124	31506 (2910-01-414-5382)
DB2831-5485 (2910-01-467-9085)	776848 99 and Above	29124	31506 (2910-01-414-5382)

2-24. ENGINE RUNNING TESTS

This is a top level test for problems with an engine that starts but doesn't run well after starting. This includes an engine that starts but doesn't stay running for very long. If the engine doesn't start, or starts but immediately stops, or is very hard to start, try the STARTABILITY tests first.

A functional flow schematic is not applicable to this section. However, so that you may refer to sections as you need them, a quick index to the systems relating to engine running is given here.

PARAGRAPH	PAGE
FUEL SYSTEM	2-99
AIR INTAKE/EXHAUST	2-141
COMPRESSION/MECHANICAL	2-147

ENGINE RUNNING

DIAGNOSTIC FLOWCHART

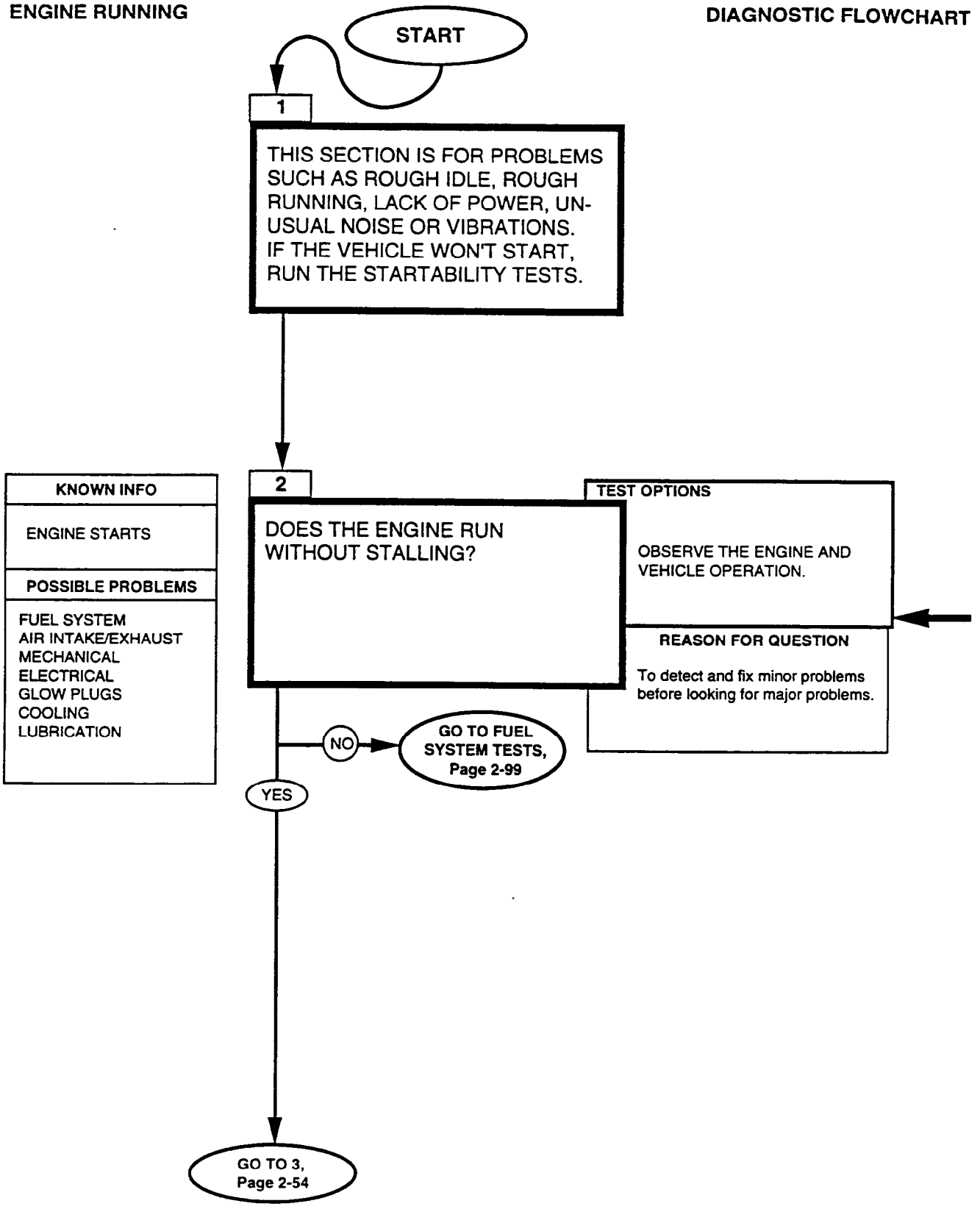

REFERENCE INFORMATION

ENGINE RUNNING

This is a check for all of those problems which can cause the engine to stop when it shouldn't. This includes fuel, air, and electrical problems. If the engine starts and then stops immediately, run the startability tests first.

ENGINE RUNNING

DIAGNOSTIC FLOWCHART

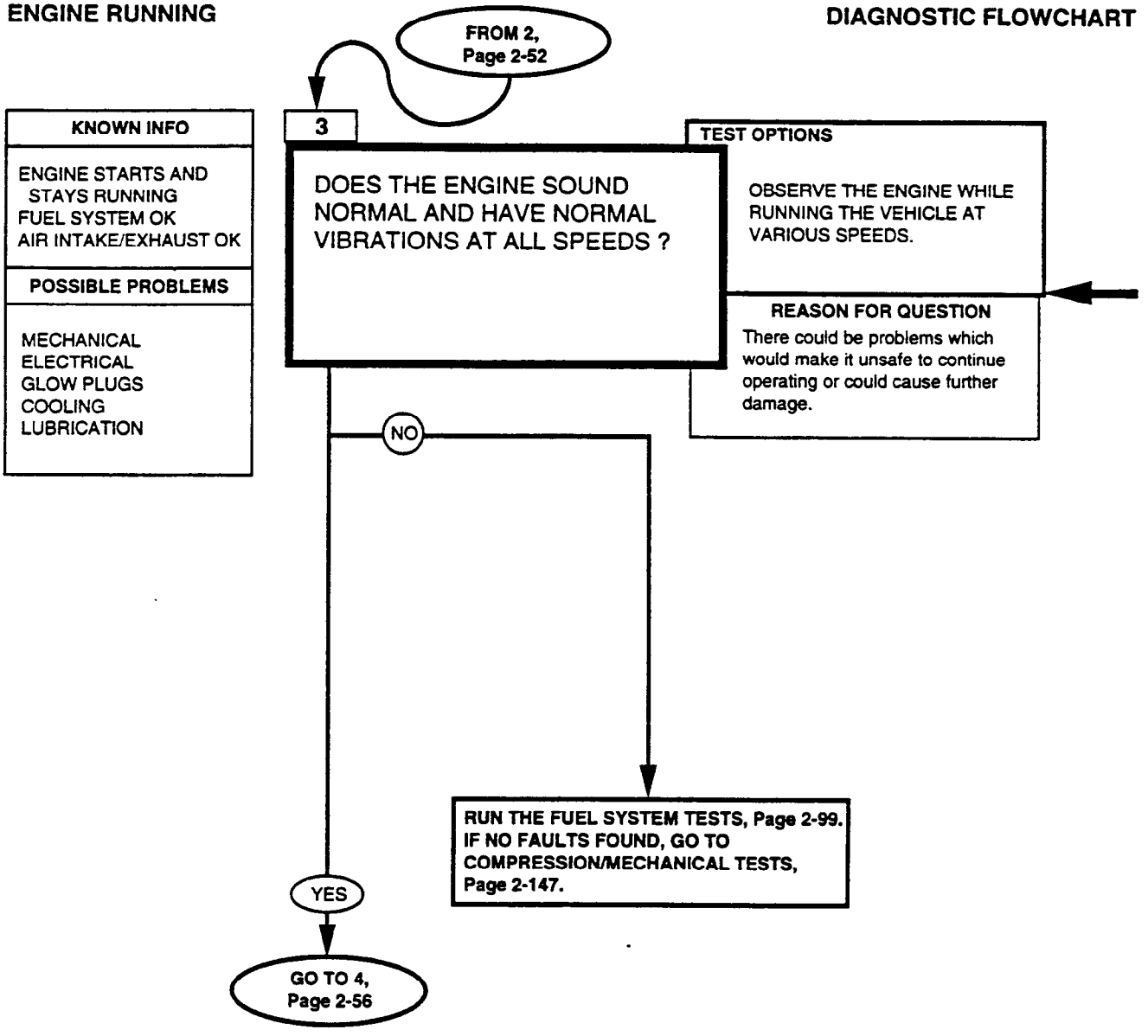

Listen for noises from the engine that aren't usually there when the engine is running normally. Also be alert for unusual vibrations while the engine is idling and while you accelerate to a safe and reasonable speed.

ENGINE RUNNING

DIAGNOSTIC FLOWCHART

FROM 3, Page 2-54

4

DOES THE ENGINE PRODUCE RATED POWER ?

KNOWN INFO

ENGINE STARTS AND STAYS RUNNING WITH NO ABNORMAL SOUNDS OR VIBRATIONS

POSSIBLE PROBLEMS

MECHANICAL
FUEL SYSTEM

TEST OPTIONS

1. STE/ICE-R TESTS 13, 12 (Pages 2-492, 2-491)
2. ACCELERATE ON A LEVEL SURFACE.

REASON FOR QUESTION

If the engine produces rated power now, then it is probably ok to use.

NO → GO TO FUEL SYSTEM, Page 2-99

YES ↓

5

IS THE EXHAUST COLORLESS?

KNOWN INFO

ENGINE STARTS AND STAYS RUNNING WITH NO ABNORMALSOUNDS OR VIBRATIONS

POSSIBLE PROBLEMS

MECHANICAL
FUEL SYSTEM

TEST OPTIONS

LOOK AT EXHAUST WHILE ENGINE IS RUNNING.

REASON FOR QUESTION

Abnormal exhaust is a sign of a fuel, air, or mechanical problem.

NO → GO TO FUEL SYSTEM, Page 2-99

YES ↓

6

DOES THE ENGINE PASS COMPRESSION UNBALANCE?

KNOWN INFO

ENGINE STARTS AND STAYS RUNNING WITH NO ABNORMAL SOUNDS OR VIBRATIONS
EXHAUST OK

POSSIBLE PROBLEMS

FUEL SYSTEM
COOLING SYSTEM
ELECTRICAL SYSTEM

TEST OPTIONS

STE/ICE-R TEST 14 (Page 2-493)

REASON FOR QUESTION

Bad compression can make other systems look bad. The lower the compression unbalance number, the better the engine.

NO → NOTIFY DS MAINTENANCE (CHAPTER 14).

YES ↓

GO TO 7, Page 2-58

REFERENCE INFORMATION

ENGINE RUNNING

If STE/ICE-R is not available, accelerate under full power to a safe and reasonable speed on a level surface. For STE/ICE-R test 12, a number higher than 6,700 is passing. For test 13, a number higher than 75 is passing.

ENGINE POWER TEST (PERCENT) STE/ICE-R TEST 13

1. Set TEST SELECT switches to 13.
2. Press and release TEST button.
3. Wait for prompting message CIP to appear.
4. When CIP appears on display, press down sharply on engine accelerator and hold it to the floor. When VTM displays OFF, release accelerator.
5. A number will be displayed after the engine has returned to idle speed. This number is the test result in units of percent of nominal rated power.

ENGINE POWER TEST (RPM/SEC) STE/ICE-R TEST 12

1. Set TEST SELECT switches to 12.
2. Press and release TEST button.
3. Wait for prompting message CIP to appear.
4. When CIP appears on display, press down sharply on engine accelerator and hold it to the floor. When VTM displays a number, release accelerator.
5. A number will be displayed after the engine has returned to idle speed. This number is the test result in units of rpm per second.

It is normal for the engine to emit some black smoke when accelerating after idling for a while. Under most other conditions, exhaust smoke is usually from one of three sources;

BLUE smoke is usually oil.
BLACK smoke is too much fuel or too little air (often caused by advanced injection timing).
WHITE smoke is usually water (often caused by retarded injection timing).

If the smoking is continuous or appears under a particular condition, the smoke probably indicates a problem and should be investigated.

If STE/ICE-R is not available, there is no easy way to test compression. In this case, go on to the next step but remember that compression may be a problem.

COMPRESSION UNBALANCE STE/ICE-R TEST 14

1. Run tests 72, 73, and 74 to verify that the batteries are ok.
2. THE GLOW PLUG CONTROLLER AND THE CONTROL VALVE ELECTRICAL CONNECTOR MUST BE DISCONNECTED PRIOR TO RUNNING THIS TEST.
3. Disconnect wire 54A at injection pump to prevent starting.
4. Disconnect glow plug controller and control valve electrical connector (to keep waveform clean).
5. Start Test 14, compression unbalance.
6. Wait for the GO message. Crank the engine.
7. Release the rotary switch when the VTM displays OFF. A number less than 25% is passing.

ENGINE RUNNING

DIAGNOSTIC FLOWCHART

FROM 6, Page 2-56

7

DOES THE ENGINE OPERATE AT NORMAL TEMPERATURE ?

KNOWN INFO

ENGINE RUNS
NO ABNORMAL NOISES OR VIBRATIONS
EXHAUST OK
COMPRESSION OK

POSSIBLE PROBLEMS

FUEL SYSTEM
COOLING SYSTEM
ELECTRICAL SYSTEM

TEST OPTIONS

1. CHECK TEMPERATURE GAUGE.
2. RUN ENGINE COOLING TESTS (Page 2-159).

REASON FOR QUESTION

A hot or cold engine may run rough and cause problems later (at very inconvenient times).

NO → GO TO ENGINE COOLING, Page 2-159

YES ↓

8

DOES THE ENGINE STOP WHEN THE ROTARY SWITCH IS TURNED TO STOP?

KNOWN INFO

ENGINE RUNS
NO ABNORMAL NOISES OR VIBRATIONS
EXHAUST OK
COMPRESSION OK
ENGINE POWER OK

POSSIBLE PROBLEMS

COOLING SYSTEM
FUEL SYSTEM

TEST OPTIONS

LISTEN.

REASON FOR QUESTION

If the engine stops, then the fuel and electrical systems are ok.

NO → GO TO FUEL SYSTEM, Page 2-99

YES ↓

9

IF YOU STILL HAVE AN ENGINE RUNNING PROBLEM, TRY RERUNNING THIS CHAIN OF TESTS.
IF EVERYTHING CHECKS OUT OK, GO TO PARAGRAPH 2-43, DRIVETRAIN (PAGE 2-453).

KNOWN INFO

MOST SYSTEMS SEEM TO BE RUNNING OK.

POSSIBLE PROBLEMS

DRIVETRAIN

TEST OPTIONS

1. RERUN THIS CHAIN.
2. DRIVETRAIN TESTS (Page 2-453).

REASON FOR QUESTION

We've checked just about everything that could cause an engine running problem.

REFERENCE INFORMATION

ENGINE RUNNING

Because the engine cooling tests can take a long time (mostly letting a cold engine warm up), you don't have to run them unless there is or may be a problem in the cooling system.

2-25. COOLING SYSTEM TESTS

This paragraph is a top level test for problems with either the water cooling system or the oil cooling system. Just follow the path and answer the questions. Additional information and notes are given on the facing page when necessary. The cooling system consists of the oil and water radiators, the engine fan and its controller, the water pump, and the internal coolant passages in the engine.

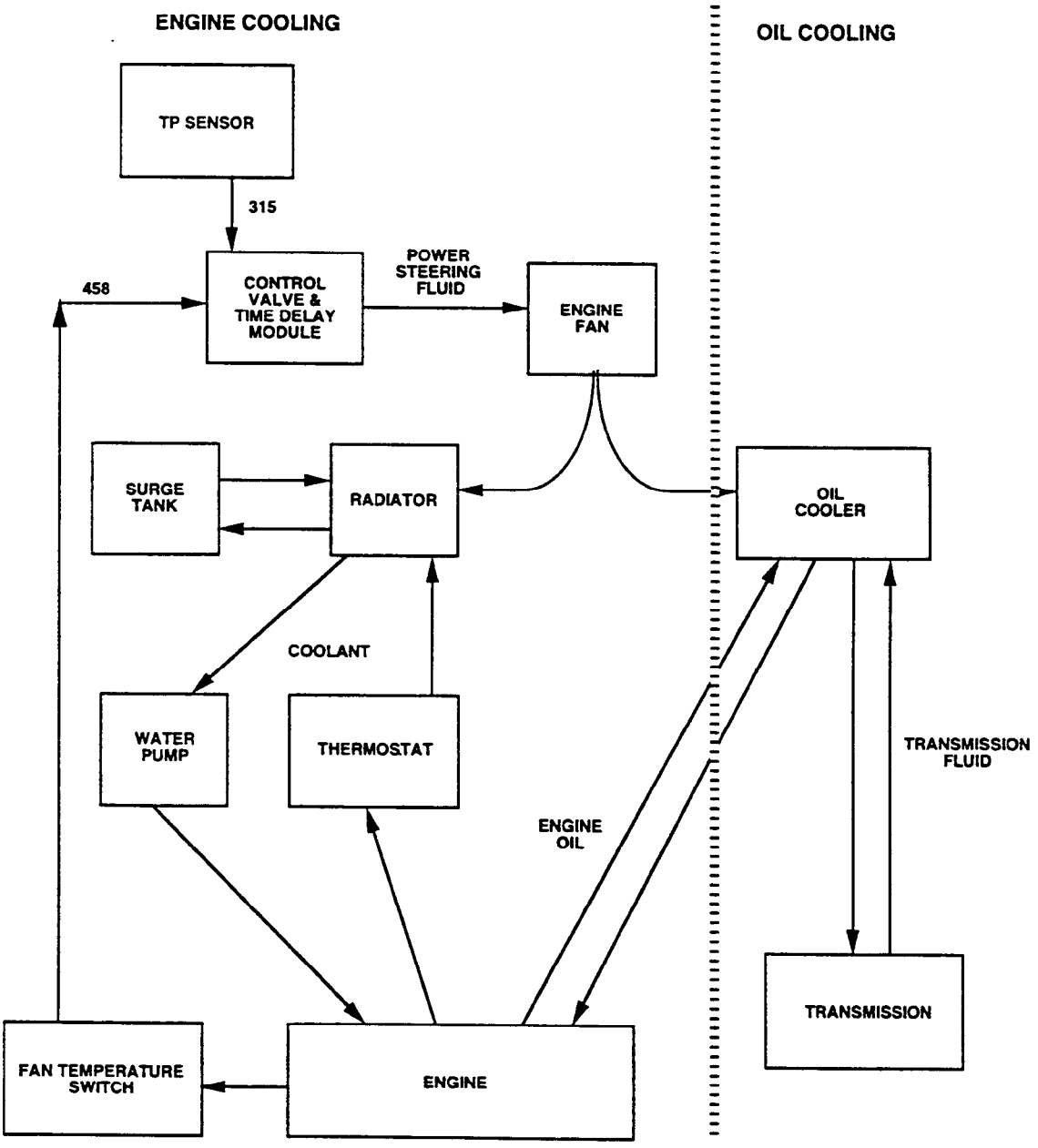

COOLING SYSTEM

DIAGNOSTIC FLOWCHART

START

1

KNOWN INFO

NONE

POSSIBLE PROBLEMS

TEMPERATURE GAUGE
TEMPERATURE SENDER
ENGINE COOLING SYSTEM
OIL COOLING SYSTEMS
SERPENTINE BELT
CONTROL VALVE

IS THE ENGINE TEMPERATURE GAUGE BELOW FULL SCALE AT ALL TIMES?

TEST OPTIONS

LOOK.

REASON FOR QUESTION

The engine should not reach temperatures over 240°F (116°C).

NO → GO TO A, Page 2-66

YES ↓

2

KNOWN INFO

TEMPERATURE GAUGe IS BELOW 240°F (116°C) AT ALL TIMES.

POSSIBLE PROBLEMS

TEMPERATURE GAUGE
TEMPERATURE SENDER
ENGINE COOLING SYSTEM
OIL COOLING SYSTEMS
SERPENTINE BELT
CONTROL VALVE

DOES THE TEMPERATURE GAUGE READ BELOW 120°F (49°C) WHEN THE ENGINE IS COLD AND THEN INDICATE HIGHER TEMPERATURES AS THE ENGINE WARMS?

TEST OPTIONS

VISUAL

REASON FOR QUESTION

You want to know if the gauge is working properly.

NO → GO TO INSTRUMENTS, Page 2-305

YES ↓

3

KNOWN INFO

TEMPERATURE GAUGE SEEMS TO WORK OK

POSSIBLE PROBLEMS

TEMPERATURE GAUGE
TEMPERATURE SENDER
ENGINE COOLING SYSTEM
OIL COOLING SYSTEMS
SERPENTINE BELT
CONTROL VALVE

DOES THE ENGINE APPEAR TO BE PROPERLY COOLED WITH NO EVIDENCE OF OVERHEATING?

TEST OPTIONS

LOOK.

REASON FOR QUESTION

If the engine is overheating with the temperature gauge below full scale, both the temperature sending system and the engine cooling are faulty.

NO → GO TO ENGINE COOLING, Page 2-159 AND THEN INSTRUMENTS, Page 2-305

YES → GO TO 4, Page 2-64

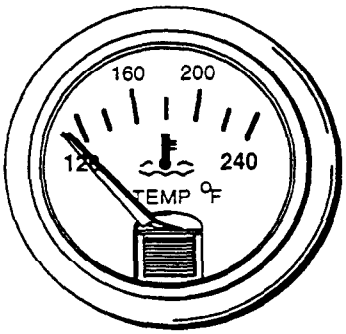

TEMPERATURE GAUGE

The question describes how the gauge should work. If you aren't sure if its working properly, you may want to run the instruments test anyway.

Look for boiling coolant, a blown surge tank pressure cap, or leaking hoses to tell you if the engine is overheating.

COOLING SYSTEM

DIAGNOSTIC FLOWCHART

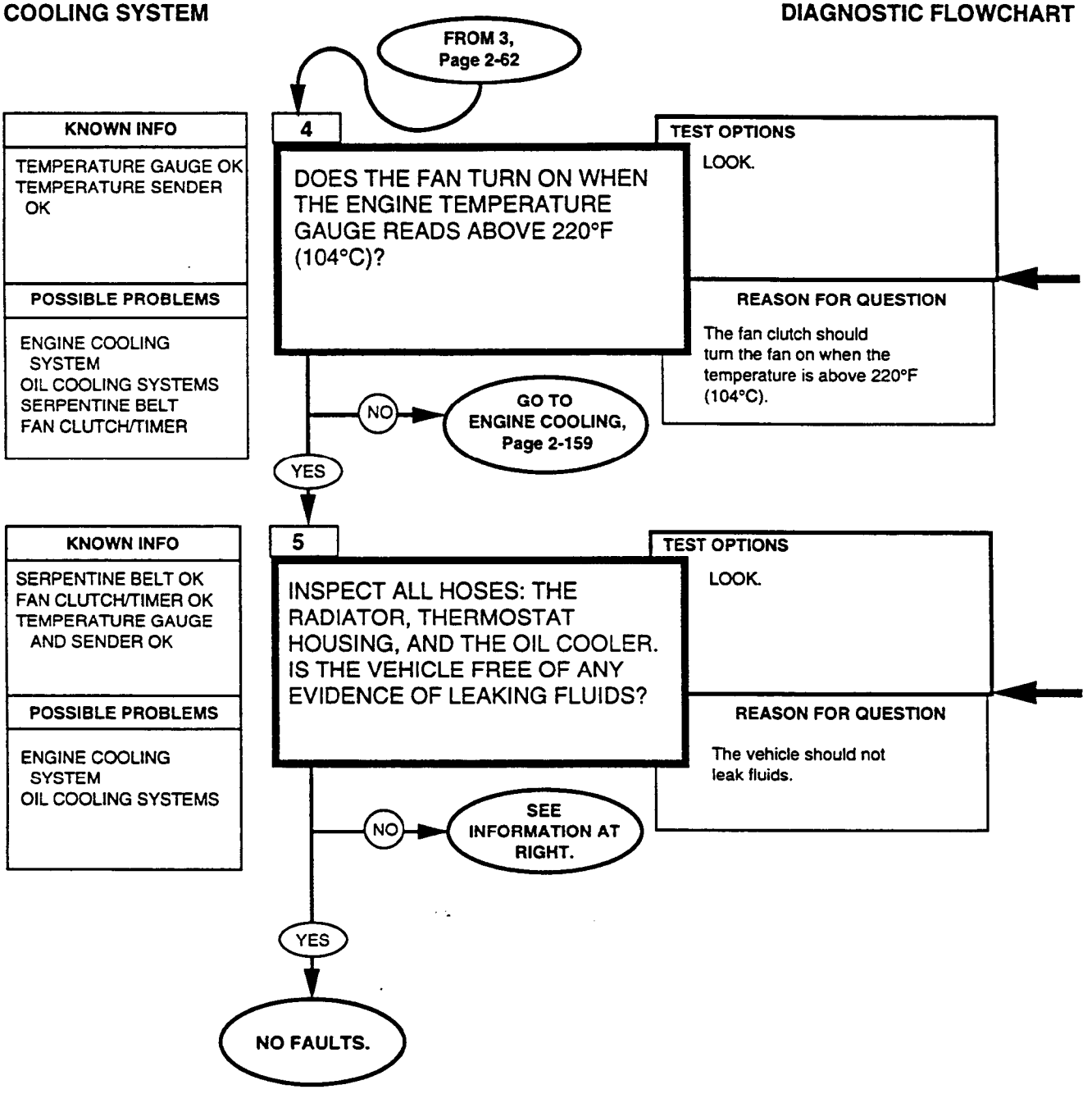

220°F (104°C) is the approximate temperature at which the fan should turn itself on.

The fan will turn on and off as the engine temperature varies.

If the leaking fluid is red, go to the transmission, para. 2-40, page 2-385.
If the leaking fluid is yellow/green, go to engine cooling, para. 2-31, page 2-159.
If the oil cooler is leaking, try to determine where the leak is coming from. The oil cooler in front of the radiator cools both engine oil and transmission fluid (top-half transmission fluid, bottom-half engine oil). If the leak is in the oil cooler, go to transmission or engine cooling. If the leak is elsewhere, go to lubrication system, para. 2-26, page 2-69.

COOLING SYSTEM

DIAGNOSTIC FLOWCHART

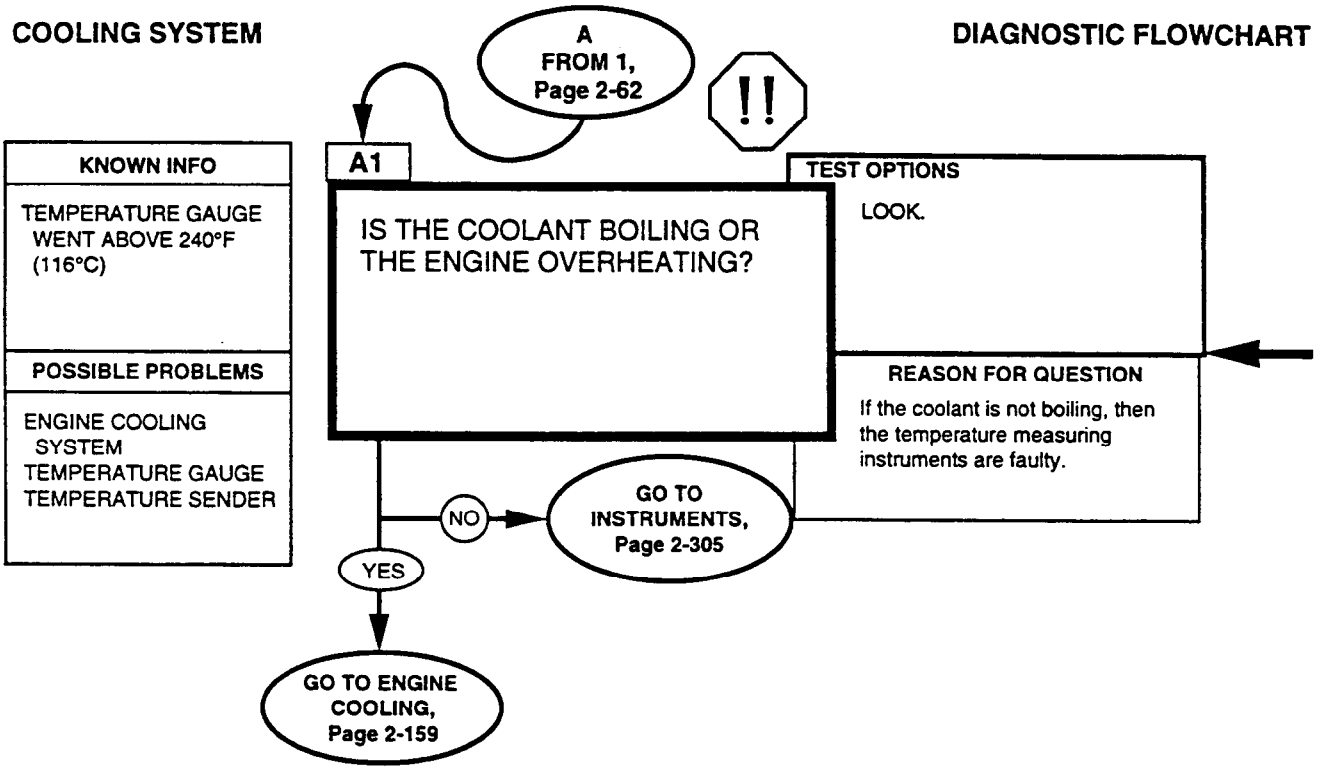

WARNING

Use caution when inspecting hot engine parts to avoid burns. Never remove the pressure cap of a hot engine.

The coolant surge tank is clear so you can see what is happening.

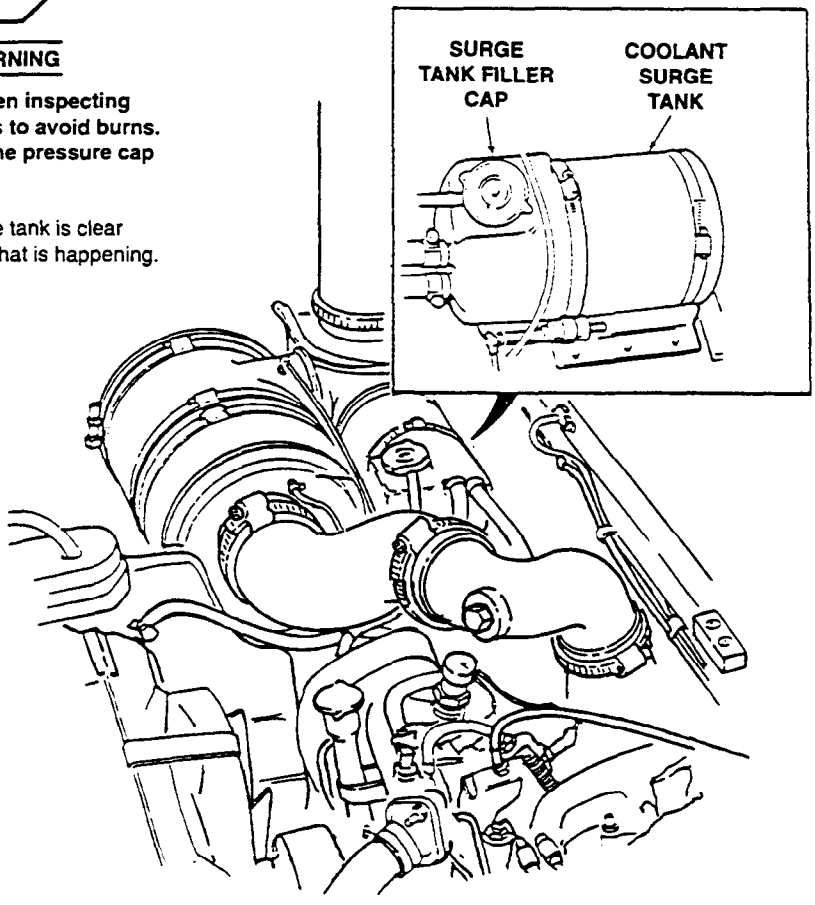

2-26. LUBRICATION SYSTEM TESTS

This paragraph is a top level test for all of the lubrication systems in the vehicle. Just follow the path and answer the questions. Additional information and notes are given on the facing page when necessary.

The HMMWV includes a venting system that is also checked in this paragraph. The purpose of the vent system is to allow vapor to escape to the atmosphere under normal operation, and to prevent venting during deep-water fording operations. If the vents were left open, water would enter the engine and other systems and cause damage. The location of the vent lines is shown below. The location of the other parts in the lubrication system are shown in other lower level paragraph as required.

NOTE

Bold lines represent ventilation system.

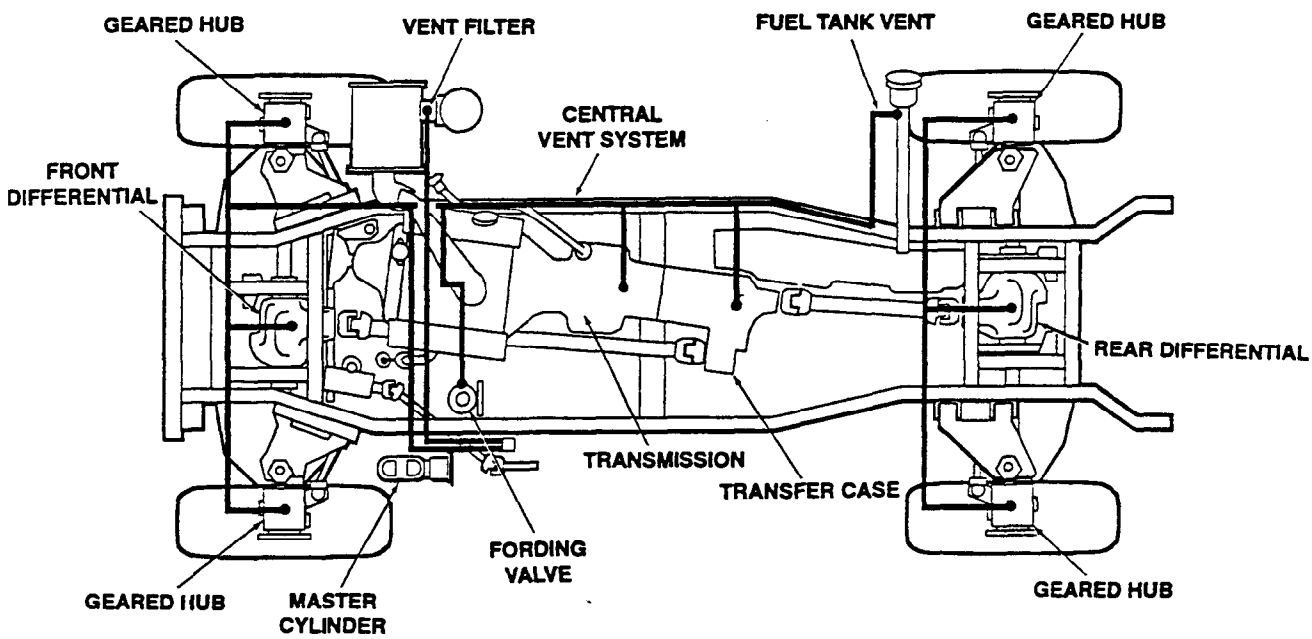

LUBRICATION SYSTEM

DIAGNOSTIC FLOWCHART

START

1

KNOWN INFO

NONE

POSSIBLE PROBLEMS

ENGINE LUBRICATION
TRANSMISSION LUBRICATION
CHASSIS LUBRICATION
VENTING SYSTEM

RUN THE ENGINE LUBRICATION TESTS. WERE YOU ABLE TO CORRECT ALL OF THE FAULTS?

TEST OPTIONS

ENGINE LUBRICATION TESTS (Page 2-191).

REASON FOR QUESTION

The tests in para. 2-32 are easy to run and will test out the engine lubrication system.

NO → NOTIFY DS MAINTENANCE (CHAPTER 14).

YES

2

KNOWN INFO

ENGINE LUBRICATION OK

POSSIBLE PROBLEMS

TRANSMISSION LUBRICATION
CHASSIS LUBRICATION
VENTING SYSTEM

CHECK THE TRANSMISSION FLUID. IS IT OK ?

TEST OPTIONS

VISUAL - SEE NOTE AT RIGHT. IF YOU SUSPECT PROBLEMS WITH THE TRANSMISSION, YOU CAN RUN THE TESTS IN PARA. 2-40, PAGE 2-385.

REASON FOR QUESTION

Transmission fluid level and appearance give a good indication of the system's condition.

NO → SEE NOTE AT RIGHT.

YES

3

KNOWN INFO

ENGINE LUBRICATION OK
TRANSMISSION LUBRICATION OK

POSSIBLE PROBLEMS

CHASSIS LUBRICATION
VENTING SYSTEM

CHECK ALL OF THE REMAINING VEHICLE LUBRICATION POINTS. ARE THEY ALL PROPERLY LUBRICATED AND IN GOOD REPAIR?

TEST OPTIONS

SEE TM 9-2320-387-10 FOR LOCATION AND LUBRICATION INSTRUCTIONS.

REASON FOR QUESTION

The chassis and drivetrain need to be properly lubricated in order to keep the vehicle in good repair.

NO → LUBRICATE OR REPAIR AS NEEDED.

YES → GO TO 4, Page 2-72

The tests in para. 2-32 test the oil level, cleanliness, leaks in the system, and the CDR valve. Return here when you've fixed everything you can or if no faults were found.

PROCEDURE FOR CHECKING TRANSMISSION FLUID

1. Start engine.
2. Hold down brake pedal and move transmission shift lever through all ranges including reverse.
3. Engage parking brake and place shift lever in neutral. Check fluid level on dipstick.
4. Proper level is between FULL and ADD marks on dipstick.

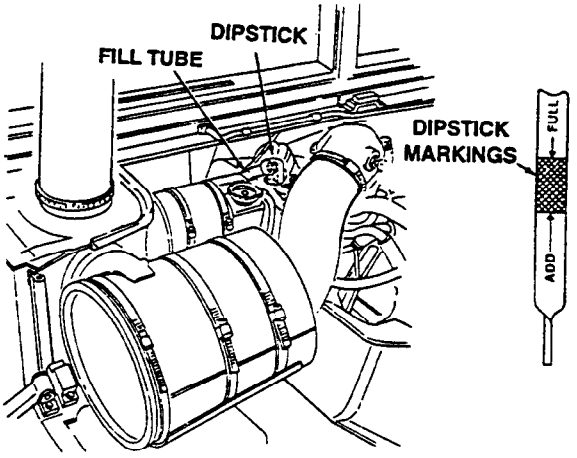

NOTE

Check fluid for a burnt smell, grit, discoloration, air bubbles, or a milky appearance.

- Burnt smell, discoloration, or grit indicates worn or damaged internal components. Notify DS maintenance (chapter 14).
- Bubbles indicate an overfilled system or air leaks in the system. Drain the fluid and refill to proper level (para. 5-2).
- Milky appearance is due to water in the system. Drain the fluid from the entire transmission and transmission cooling system and install a new filter (para. 5-2).
- Check fill tube for indications of fluid being blown out. If fluid is being blown out, check vent line for obstructions, and refill transmission to proper level (para. 5-2).

Among the items are the driveshafts, suspension, differentials, and geared hubs.

LUBRICATION SYSTEM

DIAGNOSTIC FLOWCHART

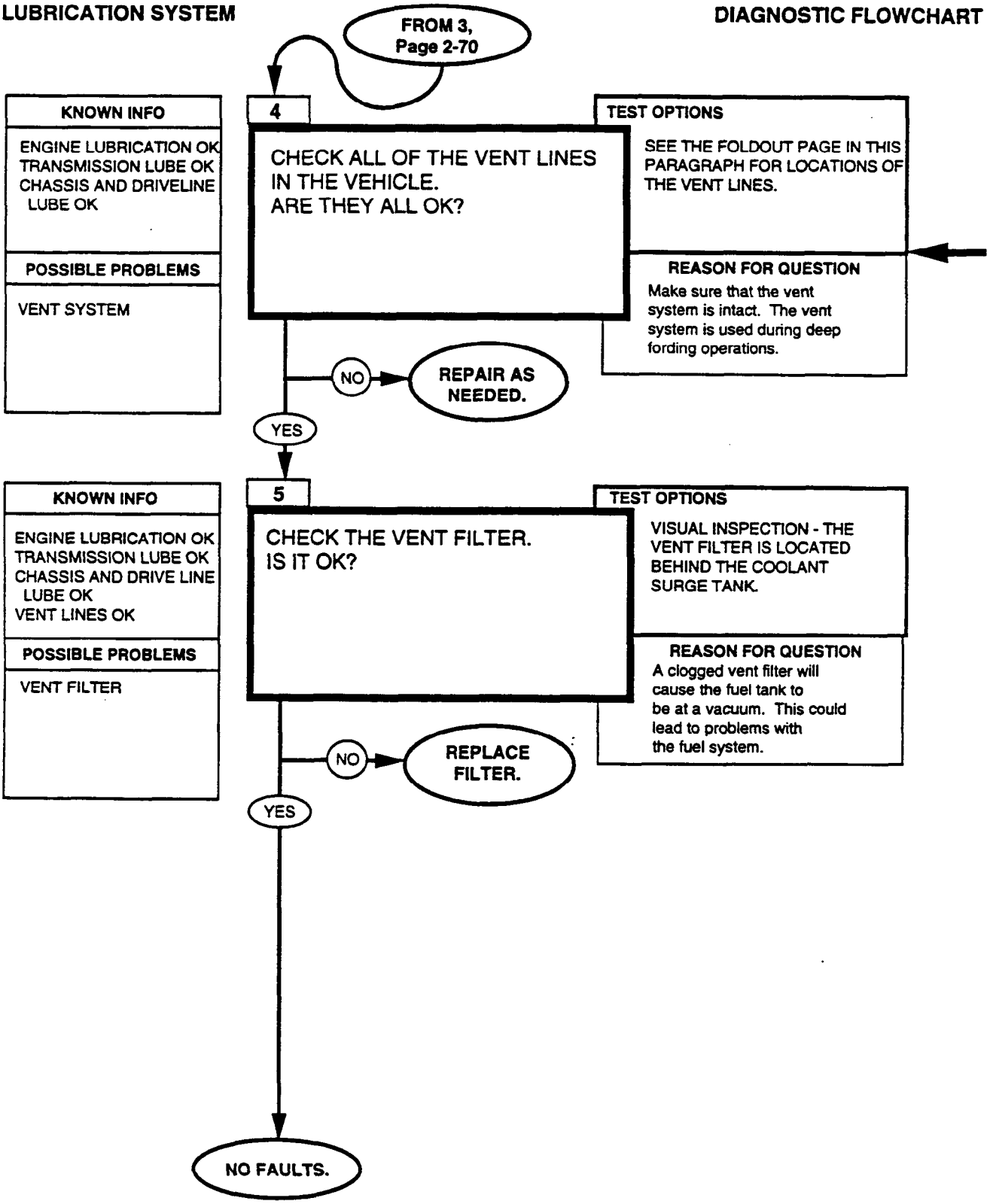

There are vent lines attached to all parts of the vehicle with a lubrication reservoir. These parts are the engine, transmission, transfer case, differentials, geared hubs, and the fuel tank. Removal procedures for the vent lines are given in the repair procedure for the particular component to which the line is attached.

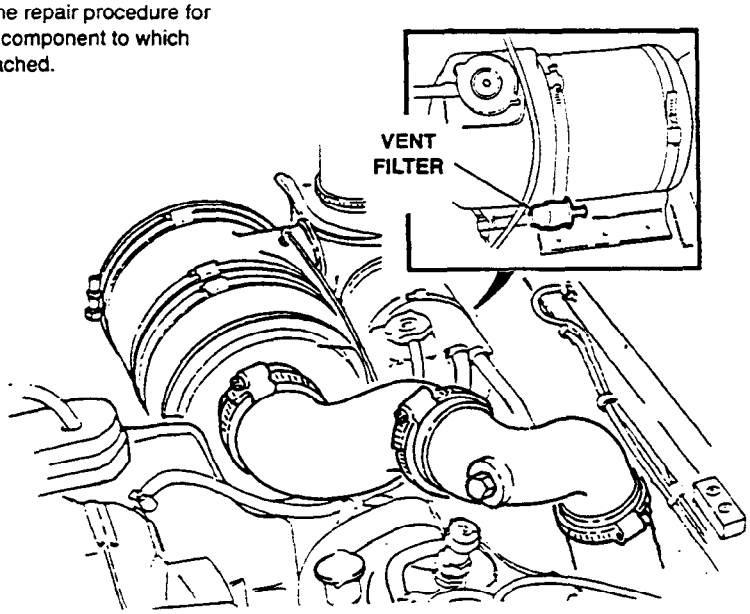

2-27. ELECTRICAL TESTS

Most of the electrical circuits in the vehicle are included in one of the major systems covered by this manual. This is a top level paragraph to help you pick the right one. A number of schematics are also included to help you find the problem. If you go through the flow chart and can't solve the problem, use the schematics to find wires which may be causing trouble.

The electrical system consists of the batteries, which produce electrical power by a chemical reaction between the lead plates and the electrolyte solution (a mixture of acid and water). This power is carried by wires and cables to those parts of the vehicle which require electrical power. The batteries get recharged by the alternator, which generates electrical power by using some of the engine's mechanical power, produced when the engine is running. If you are not too confident about electrical concepts and terminology, you should read para. 2-22, page 2-43.

All electrical systems require a connection to ground (called grounding), which is the completion of the circuit to the battery negative. Pages 2-90, 2-91, and 2-92 are diagrams of the grounding. If your vehicle exhibits strange symptoms that seem to defy all efforts to fix them, the vehicle may have a grounding problem. Grounding problems cause strange symptoms usually because more than one circuit is using the same ground, or because a circuit has more than one ground. For example, looking at the body ground diagram, if wire 58D (a ground for the instruments) is disconnected from the left-side cylinder head, the instruments may still function due to the separate ground, but they would probably be erratic and inaccurate. Usually the problem will be a loose or corroded connection between the circuit, through body ground to battery negative terminal. Be sure to check continuity to battery negative cable rather than simply to the vehicle body or engine block.

After the grounding diagrams are functional flow schematics of the major systems in the vehicle. The shaded areas are the wires and components of the vehicle master power distribution. These are designed to help you find the system giving you problems.

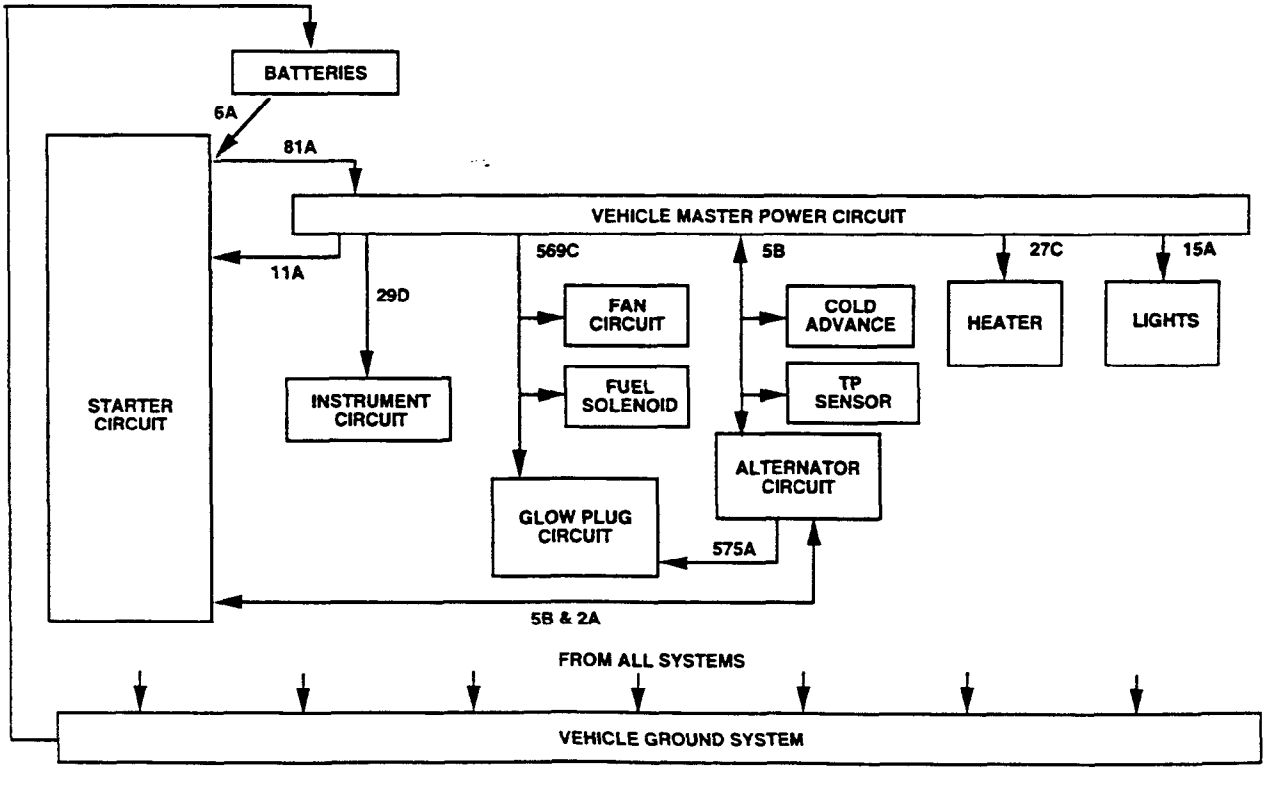

ELECTRICAL

DIAGNOSTIC FLOWCHART

START

1

KNOWN INFO

NOTHING

POSSIBLE PROBLEMS

SHORTS
OPENS

WITH THE ROTARY SWITCH TURNED TO STOP, ARE ALL CIRCUITS EXCEPT THE LIGHTS UNPOWERED?

TEST OPTIONS

1. LOOK.
2. STE/ICE-R TEST 90 (Page 2-507).

REASON FOR QUESTION

It's important to verify that there are no shorts which could cause things to be powered when they shouldn't be.

NO → **GO TO A, Page 2-82**

YES ↓

2

KNOWN INFO

POWER IS OFF WHEN IT SHOULD BE

POSSIBLE PROBLEMS

OPENS

DO ANY OF THE LIGHTS WORK WITH THE ROTARY SWITCH IN THE STOP POSITION?

TEST OPTIONS

TURN LIGHTS ON AND LOOK.

REASON FOR QUESTION

The lights should work with the rotary switch at STOP. If the lights work, power is making it from the batteries through the PCB to the light circuit.

NO → **GO TO C, Page 2-86**

YES ↓

3

KNOWN INFO

POWER TO THE LIGHT CIRCUIT IS OK

POSSIBLE PROBLEMS

INDIVIDUAL LIGHTS MAY HAVE BURNT BULBS, BAD WIRES, ETC.

DO ALL OF THE LIGHTS WORK WITH THE ROTARY SWITCH IN ANY POSITION?

TEST OPTIONS

TURN LIGHTS ON AND LOOK.

REASON FOR QUESTION

There may be problems which only affect one light, rather than all of them.

NO → **GO TO LIGHTS, Page 2-375**

YES ↓

GO TO 4, Page 2-78

The lights are the only circuit on the vehicle which should work or be drawing any power when the switch is in the STOP position. Check the instruments, try turning on the heater fan, listen for any relay clicking or other sign (includes engine running) that power is on when it shouldn't be.
It's best if you use the STE/ICE-R in TK mode to verify that there is no current draw from the batteries. You can't use the DCA mode for this because it will measure this current during the calibration part of the test and read that this is just an offset in the sensor.

DC CURRENT 0-1,500 AMPS STE/ICE-R TEST 90
1. Connect probe. 2. Start Test 90, DC amps. 3. Displayed reading is in amps.

The lights should work with the rotary switch in any position.

ELECTRICAL

DIAGNOSTIC FLOWCHART

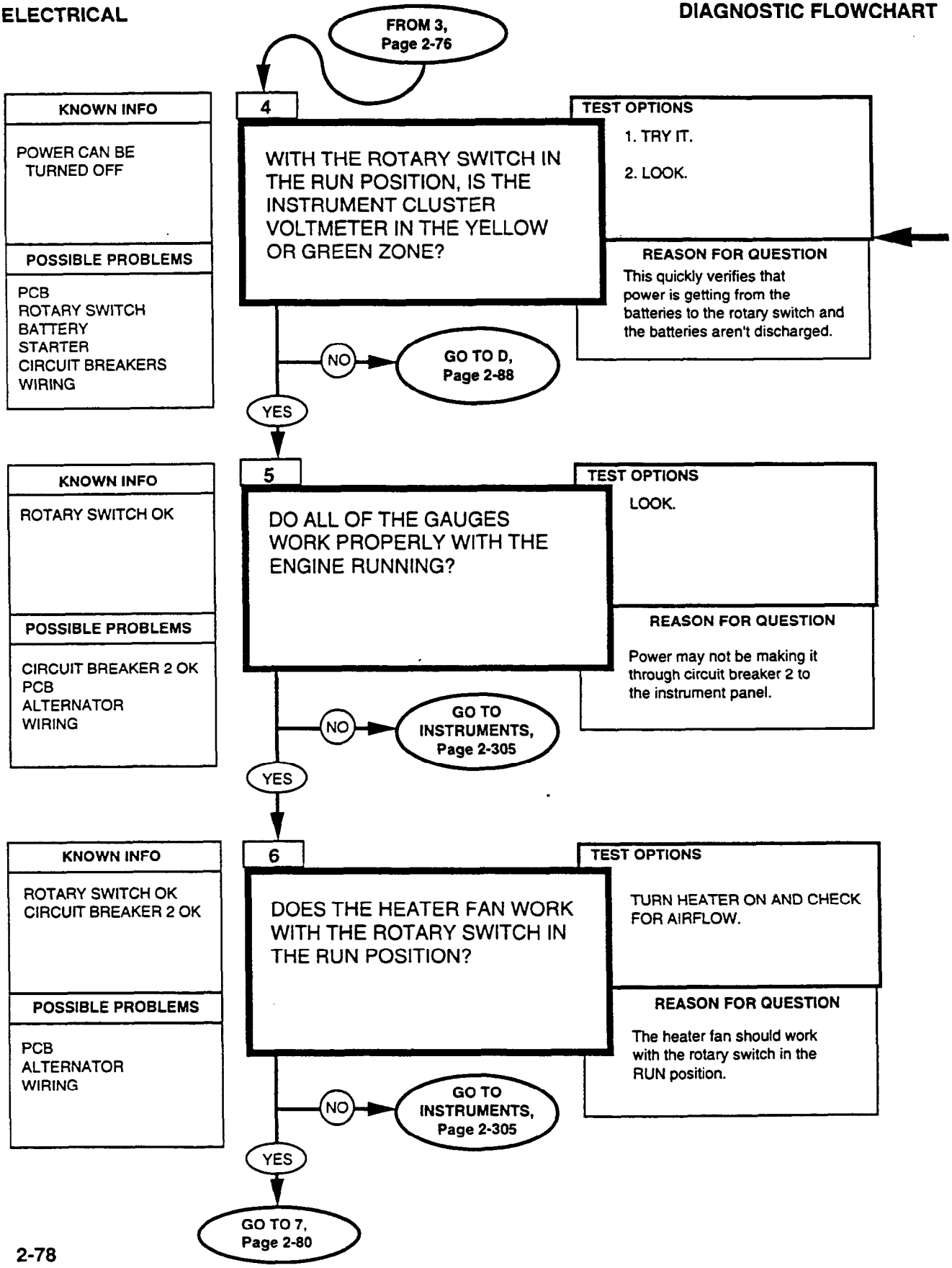

With engine off, turn switch. If the voltmeter is slightly in the yellow zone, you can continue down the YES path, but beware of possible test failures due to the low battery charge.

ELECTRICAL

DIAGNOSTIC FLOWCHART

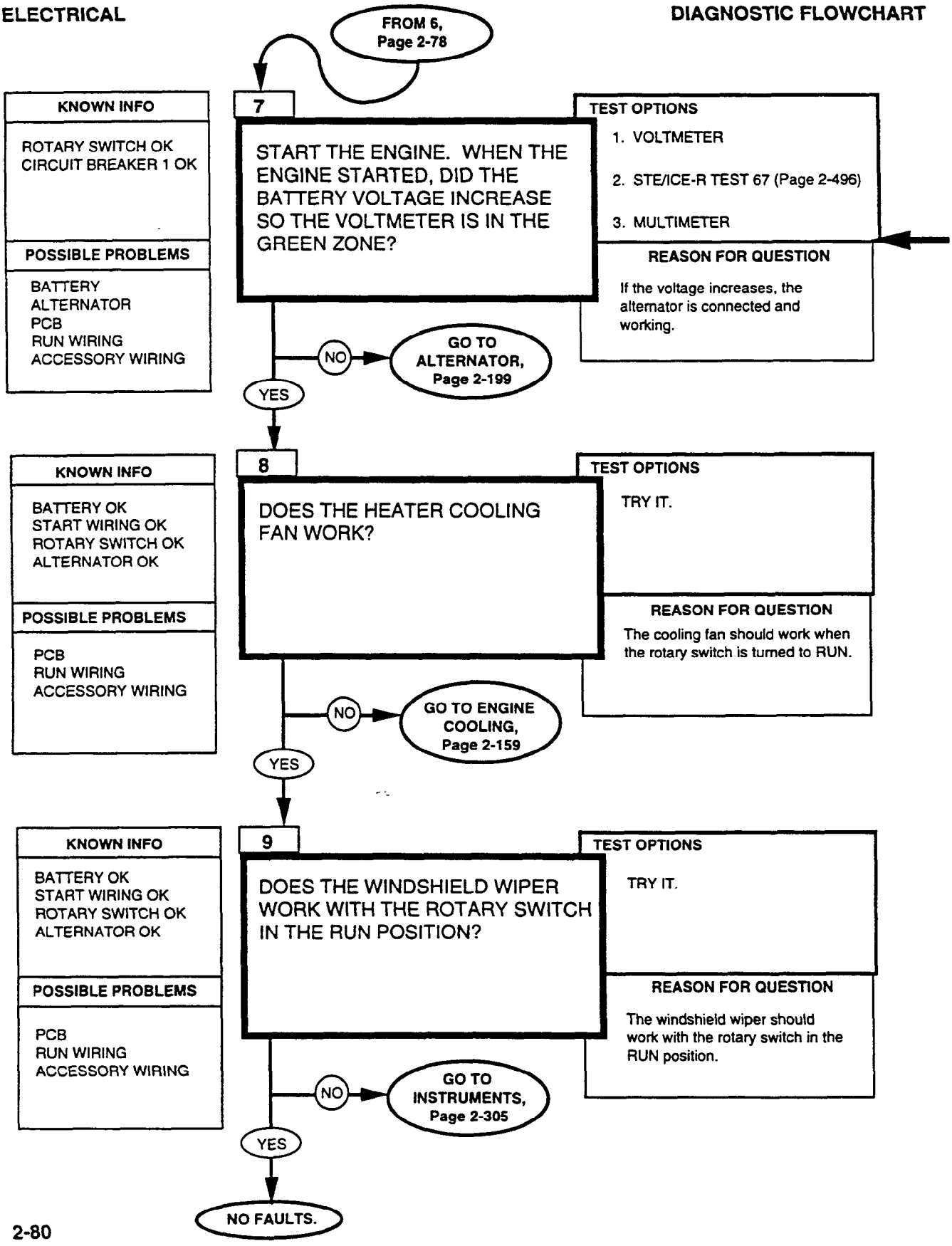

BATTERY VOLTAGE STE/ICE-R TEST 67
1. Start Test 67, battery voltage. 2. Displayed reading is in volts. Batteries should be 23-25.5 volts. Voltage in batteries will drop when glow plugs turn on.

ELECTRICAL

DIAGNOSTIC FLOWCHART

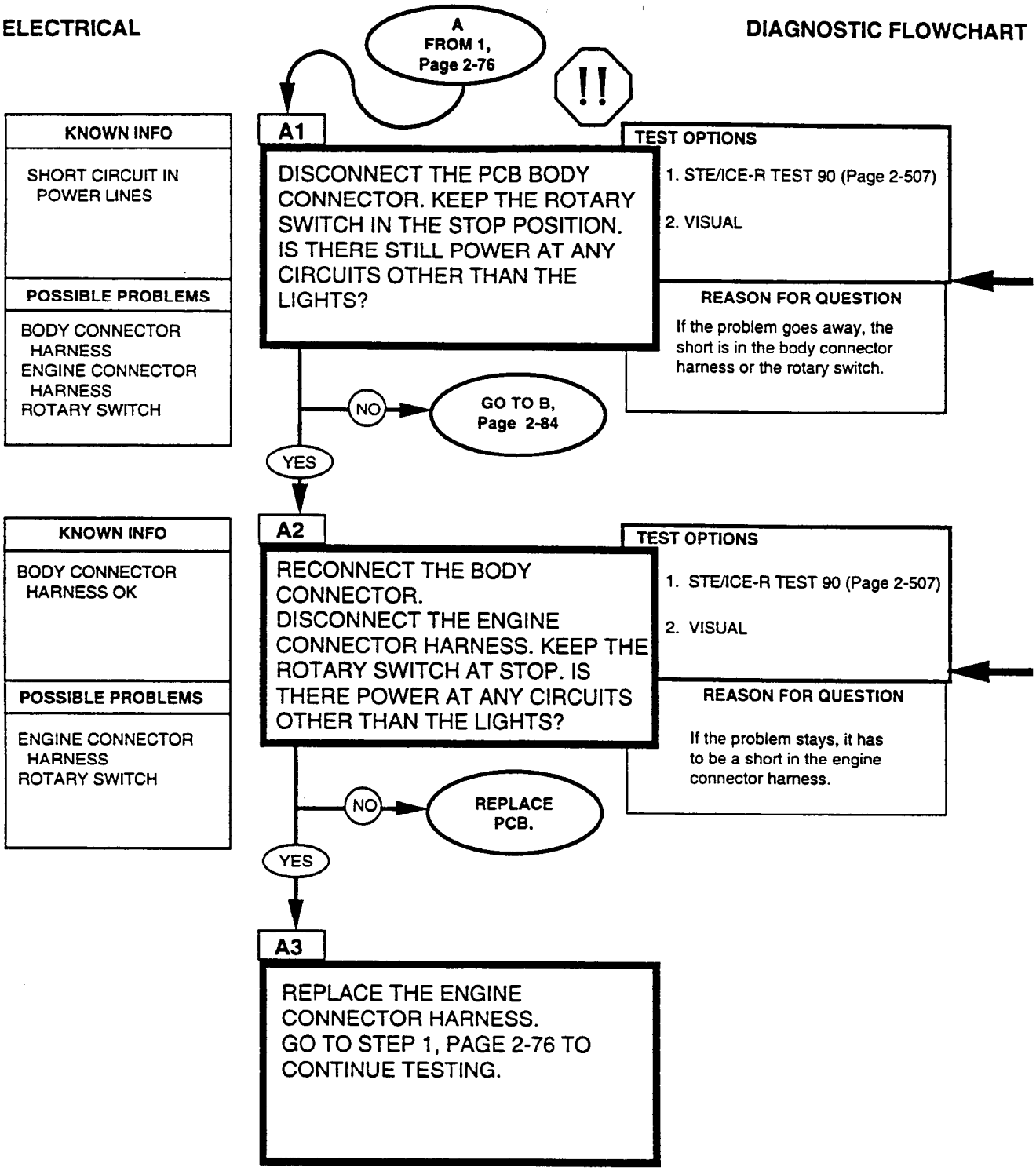

WARNING

Disconnect negative battery cable before disconnecting and reconnecting protective control box harness.

WARNING

There is battery voltage at the PCB at all times. Failure to disconnect battery cable will result in damage to equipment or injury to personnel.

DC CURRENT 0-1,500 AMPS STE/ICE-R TEST 90
1. Connect probe. 2. Start Test 90, DC amps. 3. Displayed reading is in amps.

Replace PCB (para. 4-4).

ELECTRICAL

DIAGNOSTIC FLOWCHART

B
FROM A1,
Page 2-82

B1

KNOWN INFO
SHORT ON BODY CONNECTOR SIDE OF PCB
POSSIBLE PROBLEMS
ROTARY SWITCH PCB BODY CONNECTOR BODY CONNECTOR CABLE HARNESS

IS THERE AN OPEN CIRCUIT FROM PIN B TO PIN R AND FROM PIN B TO PIN S ON THE ROTARY SWITCH (WITH THE SWITCH IN THE STOP POSITION)?

TEST OPTIONS

1. STE/ICE-R TEST 91 (Page 2-508)
2. MULTIMETER

REASON FOR QUESTION

Checking the rotary switch first makes it easier to check the other possible problems.

NO → REPLACE ROTARY SWITCH.

YES ↓

B2

KNOWN INFO
ROTARY SWITCH OK
POSSIBLE PROBLEMS
PCB BODY CONNECTOR BODY CONNECTOR CABLE HARNESS

IS THERE ABOUT 0 VOLT AT PINS A,B,D,G AND H OF THE PCB BODY CONNECTOR?

TEST OPTIONS

1. STE/ICE-R TEST 89 (Page 2-506)
2. MULTIMETER

REASON FOR QUESTION

If there is voltage at any of these pins, then the PCB must have a short in it.

NO → REPLACE PCB. !!

YES ↓

B3

REPLACE THE BODY CONNECTOR HARNESS.
GO TO A2, PAGE 2-82,
TO CONTINUE TESTING.

Replace rotary switch (para. 4-10).

RESISTANCE AND CONTINUITY
0-4,500 OHMS
STE/ICE-R TEST 91

1. Connect RED clip and BLACK clip to the terminations indicated in the question. RED to the first, BLACK to the second.
2. Start Test 91, 0-4,500 Ohms.
3. Displayed reading is in ohms. Less than 5 ohms is continuity. If the resistance is over 4,500 ohms, STE/ICE-R displays .9.9.9.9.

Replace PCB (para. 4-4).

DC VOLTAGE 0-45 VOLTS
STE/ICE-R TEST 89

1. Connect RED clip to the indicated test point, BLACK clip to negative or ground.
2. Start Test 89, DC Volts.
3. Displayed reading is in volts.

Replace harness. Notify DS maintenance (chapter 27).

WARNING

Disconnect negative battery cable before disconnecting and reconnecting protective control box harness.

WARNING

There is battery voltage at the PCB at all times. Failure to disconnect battery cable will result in damage to equipment or injury to personnel.

ELECTRICAL

DIAGNOSTIC FLOWCHART

C
FROM 2, Page 2-76

C1

KNOWN INFO
NO SHORTS LIGHTS DON'T WORK
POSSIBLE PROBLEMS
BAD CONNECTIONS BATTERIES WIRES LIGHTS CIRCUIT

CHECK ALL CONNECTIONS FROM THE BATTERIES TO THE LIGHT SWITCH. ARE THEY CLEAN AND TIGHT?

TEST OPTIONS

LOOK AND TOUCH.

REASON FOR QUESTION

Loose or dirty connections won't conduct current.

NO → CLEAN AND TIGHTEN.

YES

C2

KNOWN INFO
NO SHORTS CONNNECTIONS OK
POSSIBLE PROBLEMS
BATTERIES WIRES LIGHT CIRCUIT

TURN THE ROTARY SWITCH TO RUN. DO ANY ELECTRICAL SYSTEMS WORK (LIGHTS, INSTRUMENTS, HEATER FAN)?

TEST OPTIONS

LOOK.

REASON FOR QUESTION

This will check if the batteries have enough power to run the lights.

NO → GO TO BATTERY CIRCUIT, Page 2-237

YES

C3

GO TO LIGHTS, PARA. 2-39, PAGE 2-375, THEN CONTINUE TESTING AT STEP 3, PAGE 2-76.

Battery cables to starter.
Buss bar to solenoid.
PCB engine and body connector.
Light switch.

ELECTRICAL

DIAGNOSTIC FLOWCHART

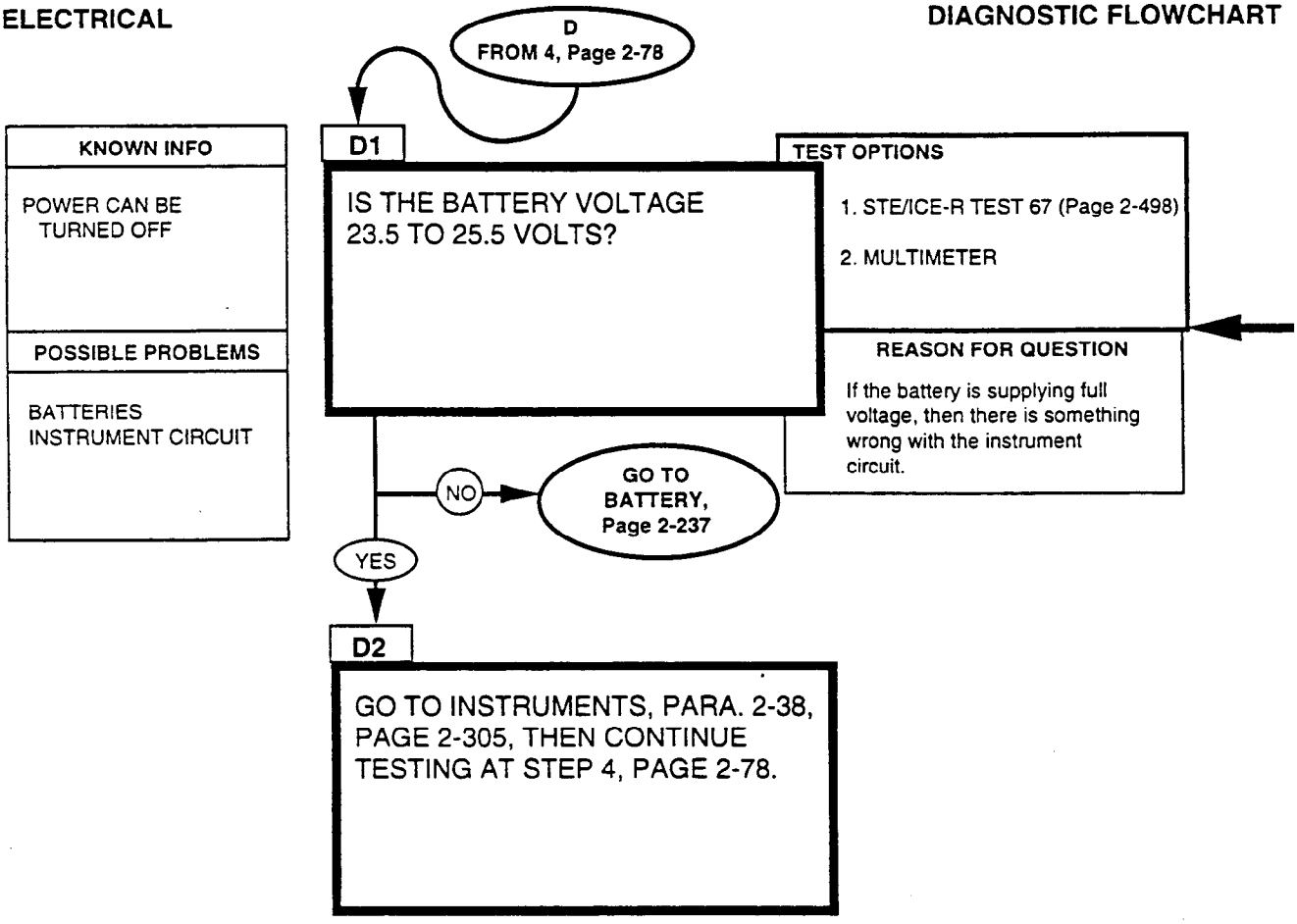

BATTERY VOLTAGE STE/ICE-R TEST 67
1. Start Test 67, battery voltage. 2. Displayed reading is in volts. Batteries should be 23-25.5 volts. Batteries' voltage will drop when glowplugs turn on.

BATTERY VOLTAGE MULTIMETER
1. Set the voltmeter to a DC volts scale of at least 40 volts. 2. Connect the RED lead to positive and the BLACK lead to negative. 3. Be sure to read the correct scale.

BATTERY/ENGINE GROUND CIRCUIT

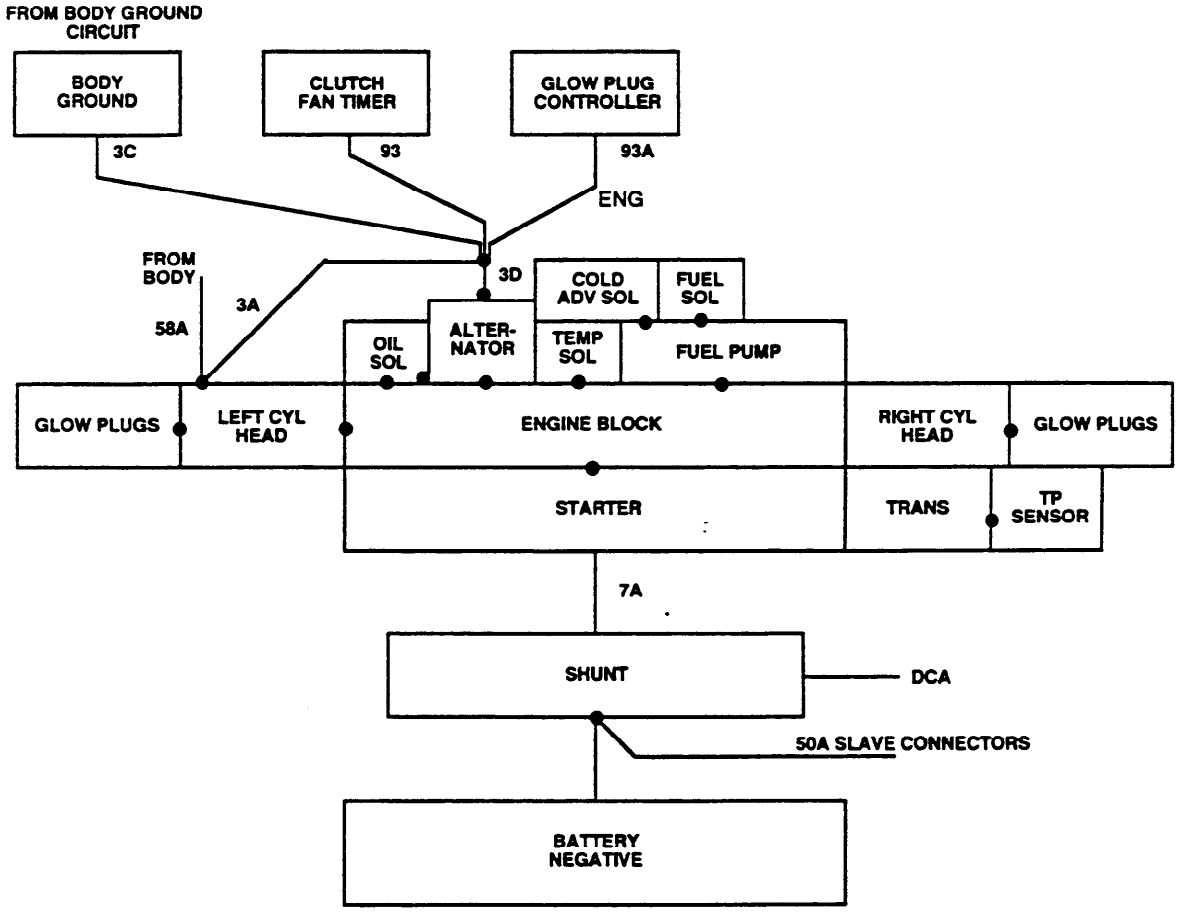

BODY GROUND CIRCUIT

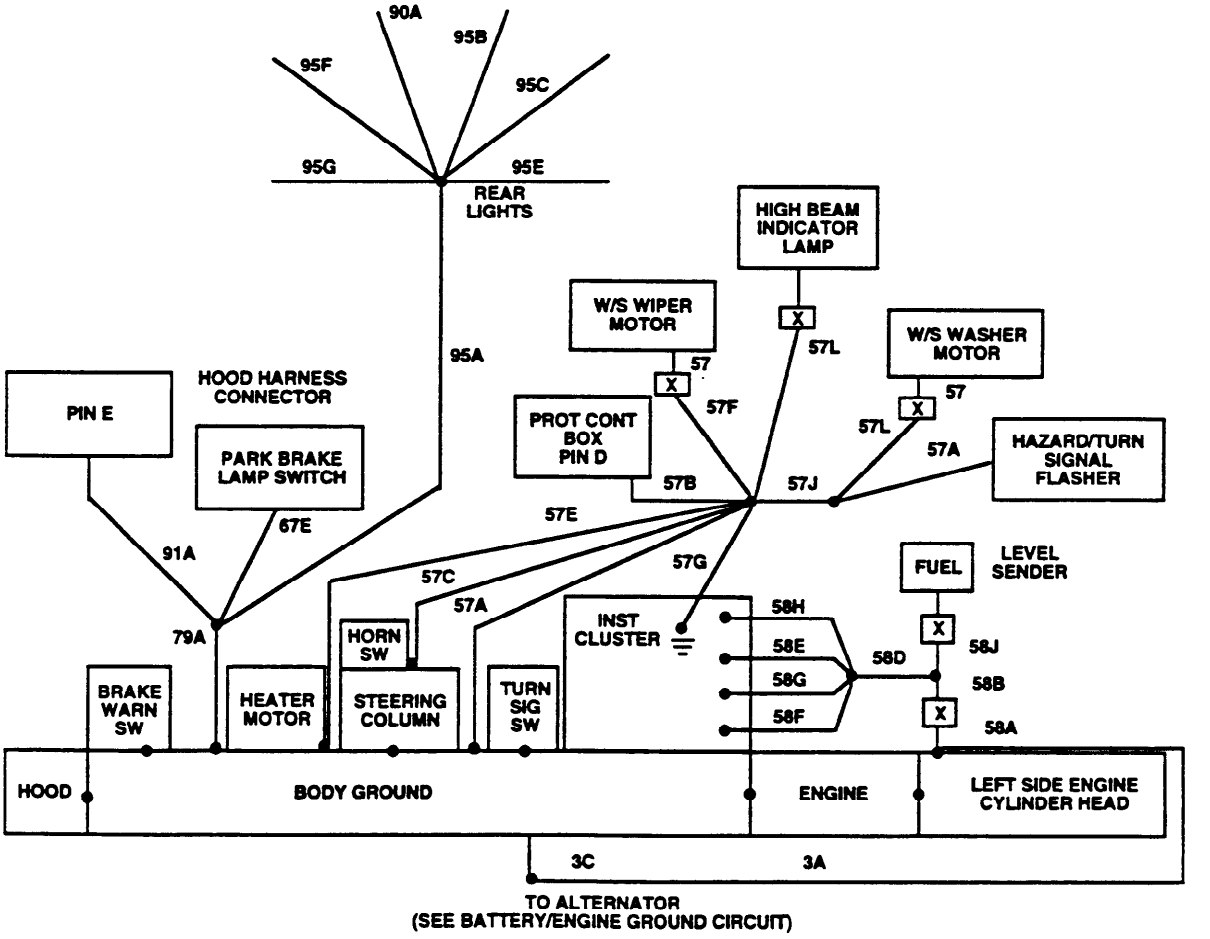

ELECTRICAL

FRONT HOOD/LIGHTS GROUND CIRCUIT

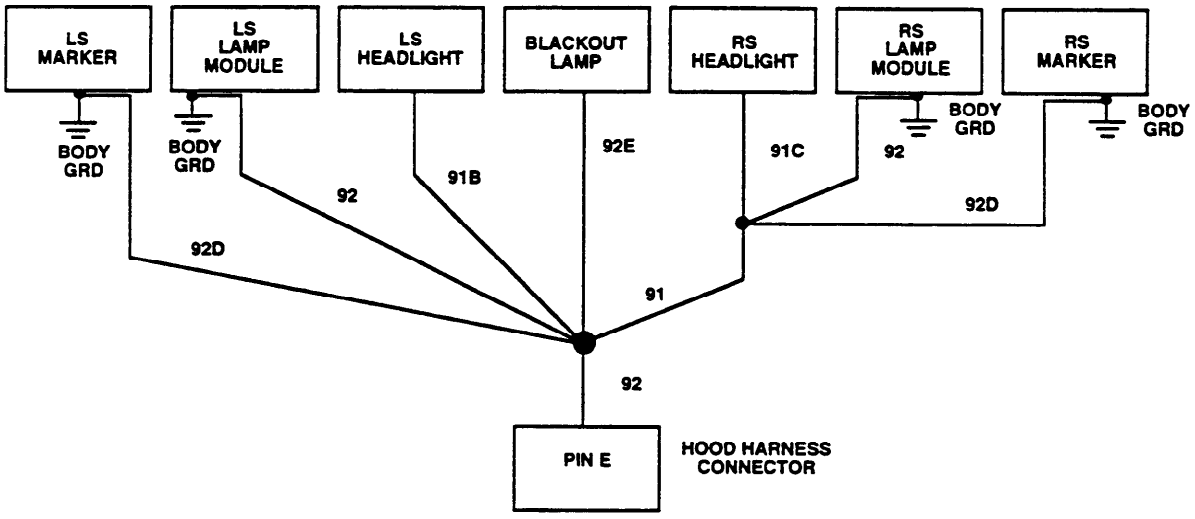

BATTERY CIRCUIT INTERFACE

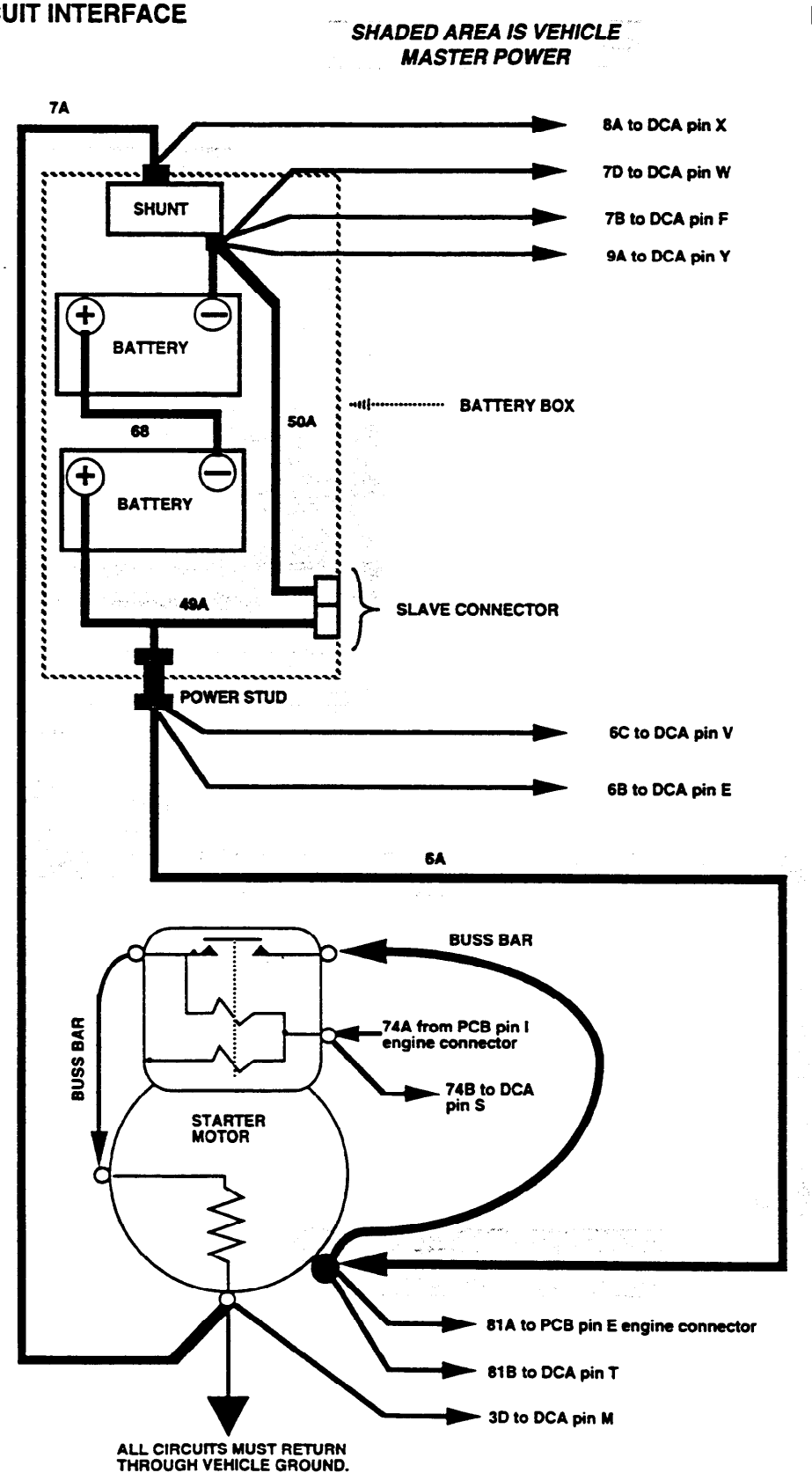

ELECTRICAL

STARTER CIRCUIT INTERFACE

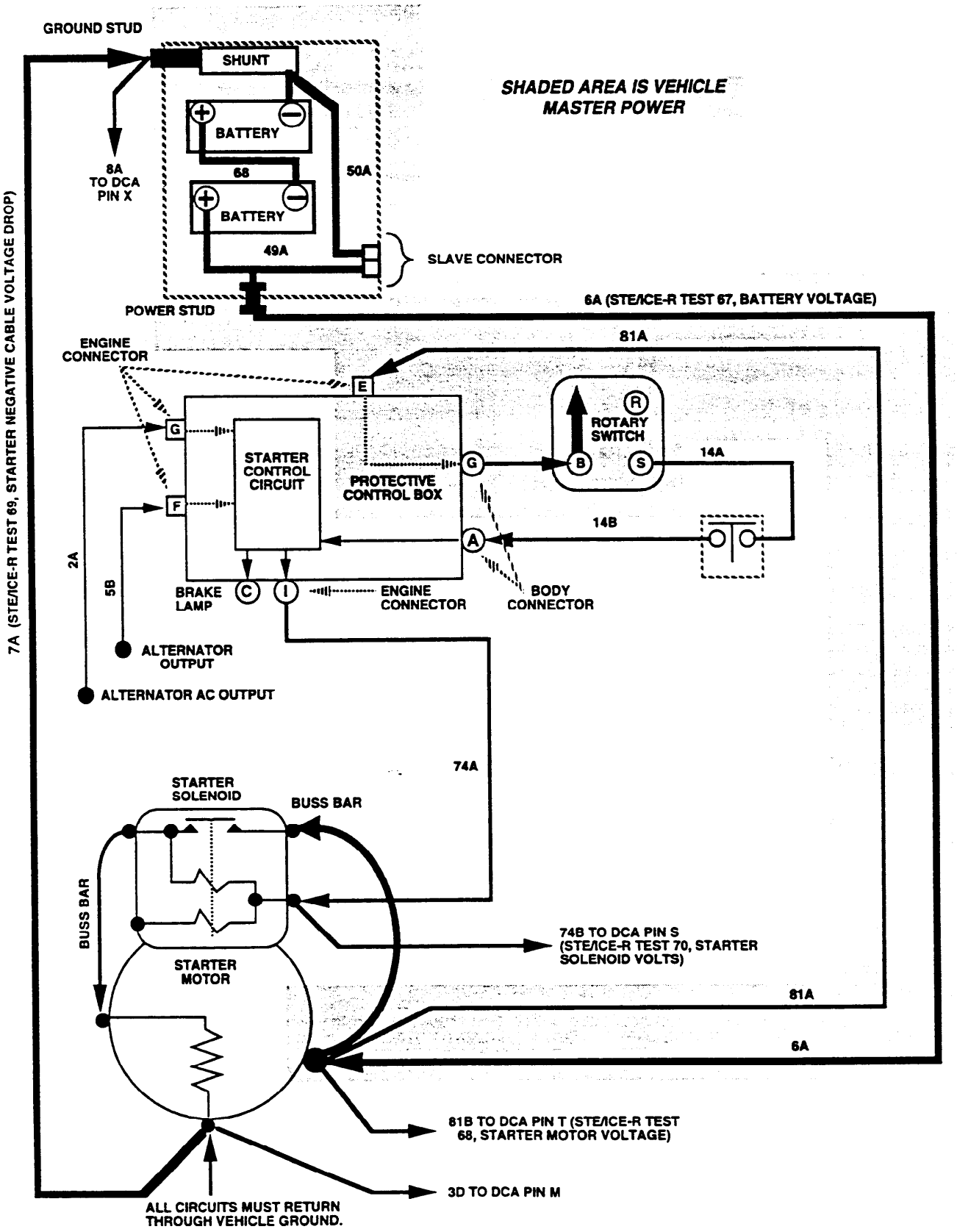

ALTERNATOR INTERFACE

ELECTRICAL

SHADED AREA IS VEHICLE MASTER POWER

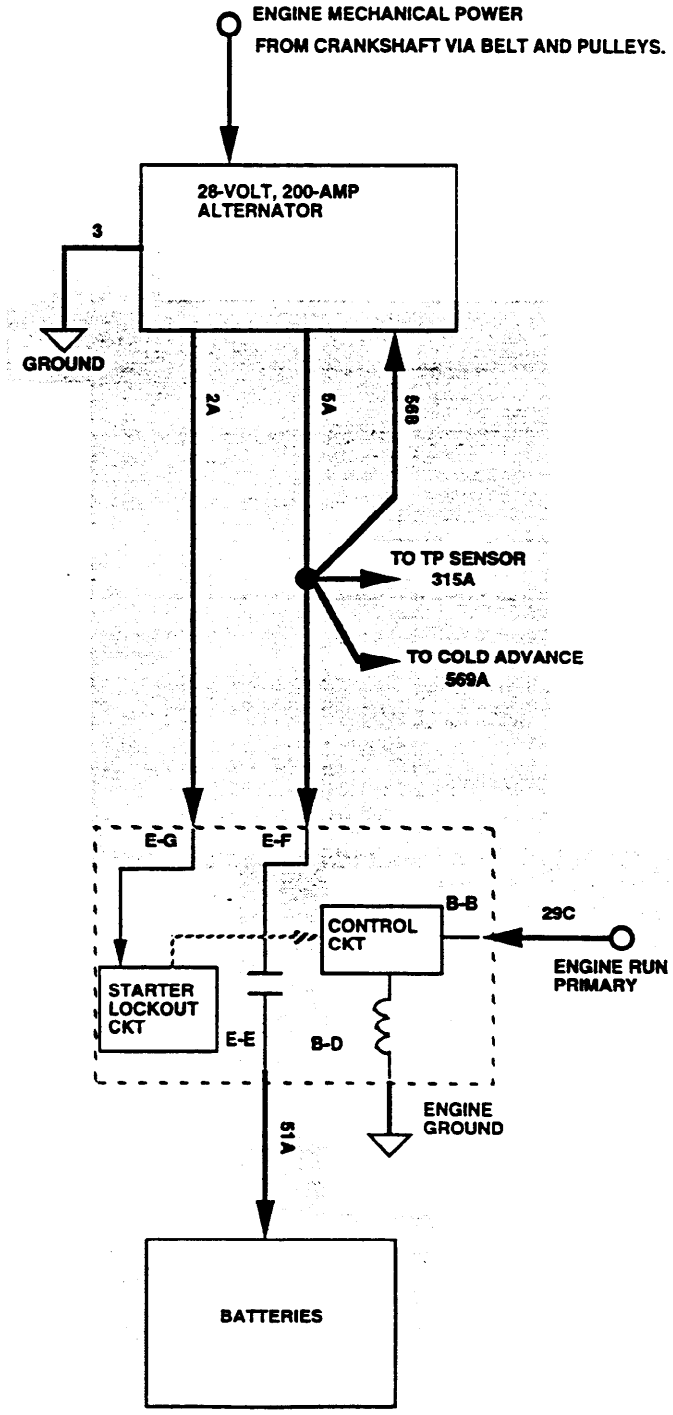

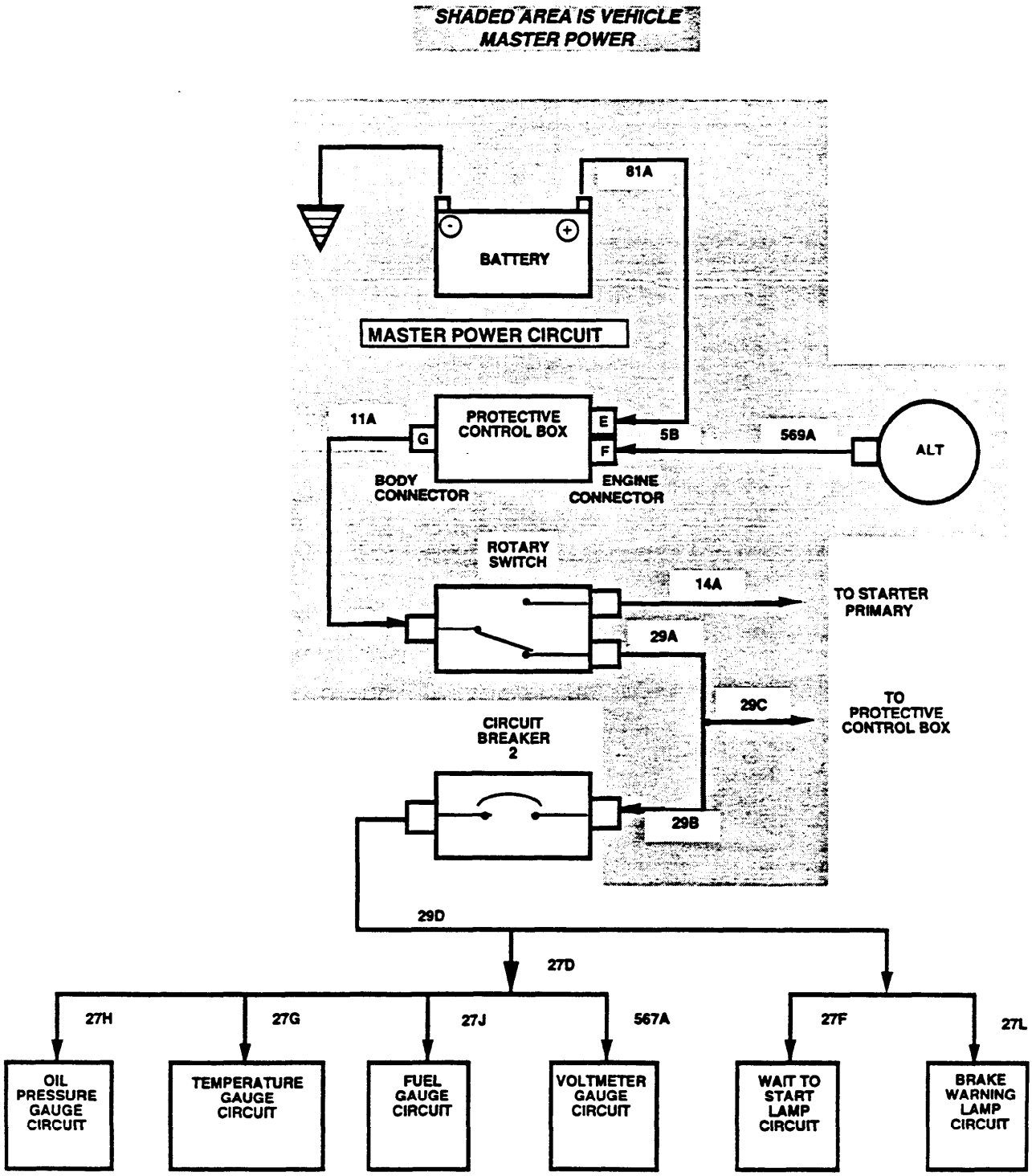
SHADED AREA IS VEHICLE MASTER POWER
81A
BATTERY
MASTER POWER CIRCUIT
11A
G
PROTECTIVE CONTROL BOX
E
F
5B
569A
ALT
BODY CONNECTOR
ENGINE CONNECTOR
ROTARY SWITCH
14A
TO STARTER PRIMARY
29A
29C
TO PROTECTIVE CONTROL BOX
CIRCUIT BREAKER 2
29B
29D
27D
27H
27G
27J
567A
27F
27L
OIL PRESSURE GAUGE CIRCUIT
TEMPERATURE GAUGE CIRCUIT
FUEL GAUGE CIRCUIT
VOLTMETER GAUGE CIRCUIT
WAIT TO START LAMP CIRCUIT
BRAKE WARNING LAMP CIRCUIT

GLOW PLUG CIRCUIT INTERFACE

ELECTRICAL

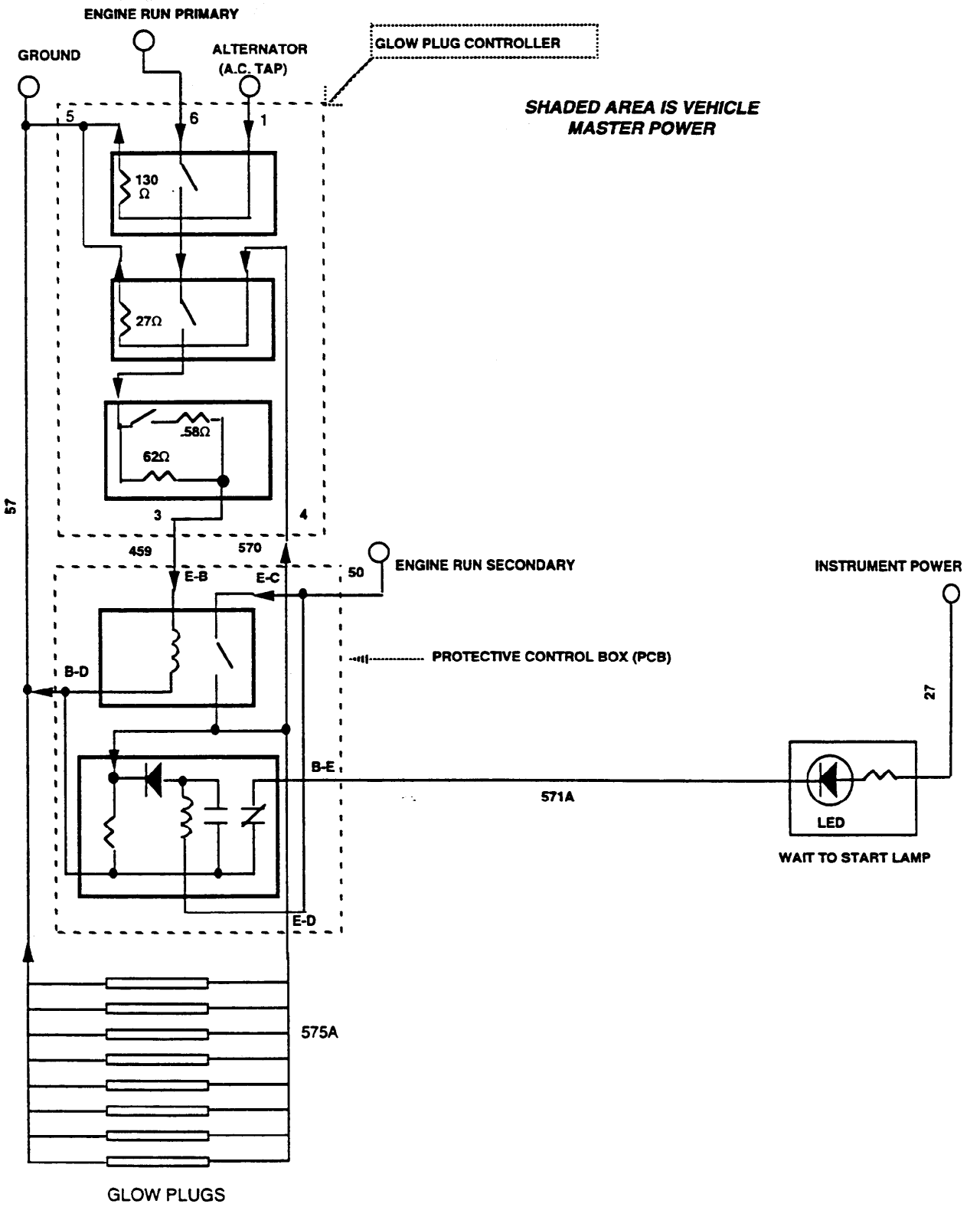

ELECTRICAL

FUEL SYSTEM INTERFACE

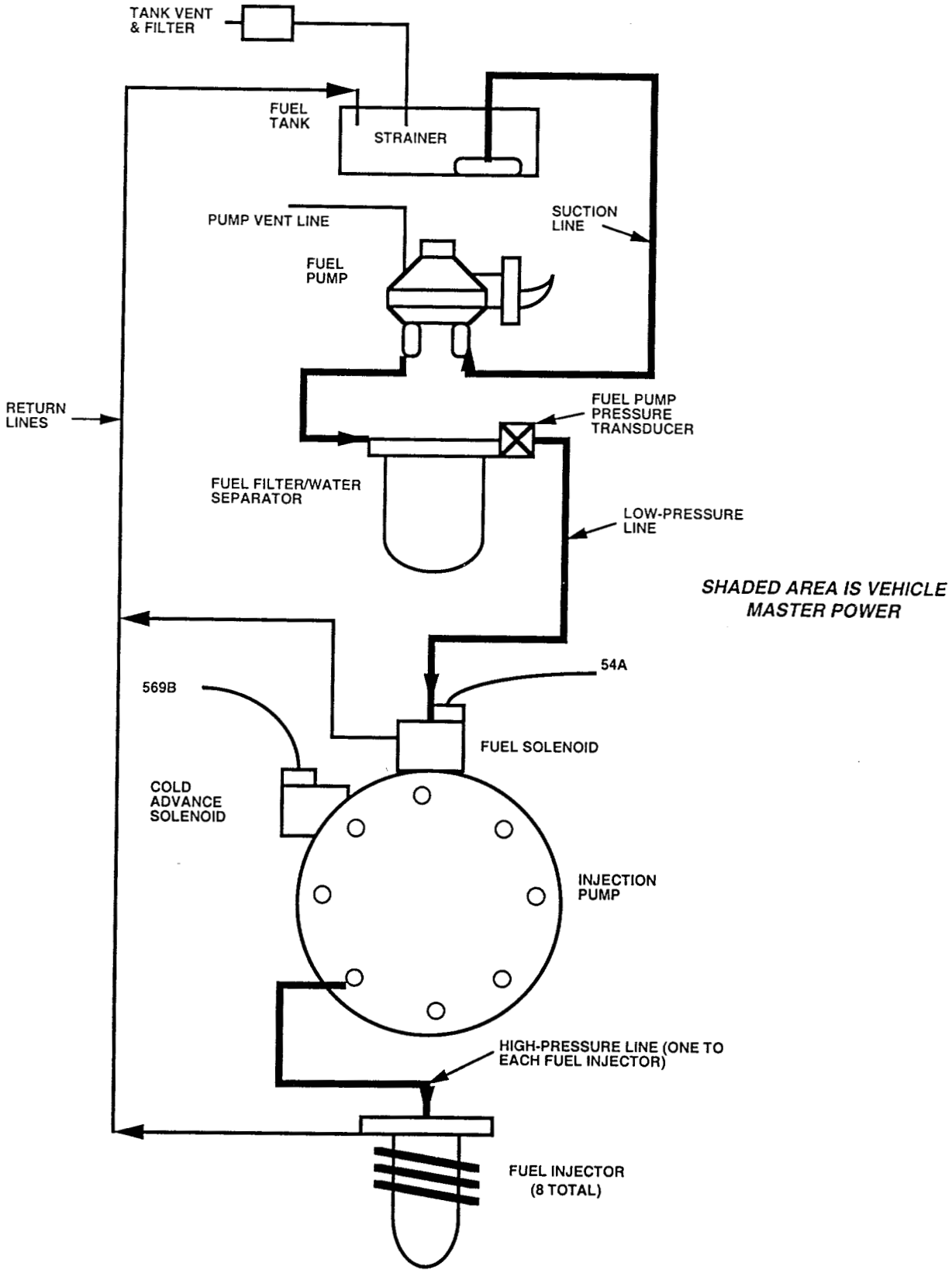

2-28. FUEL SYSTEM TESTS

These fuel system tests can be run any time you think there may be a problem with the fuel system or if you were sent here from another test.

If you are running this test because the engine runs rough, remember that air intake and exhaust as well as internal mechanical problems can also cause this condition.

At the bottom of this page is a simplified block diagram which shows how the different fuel system components relate to each other. Refer to fold-out page FP-1 and leave open for reference while you are testing.

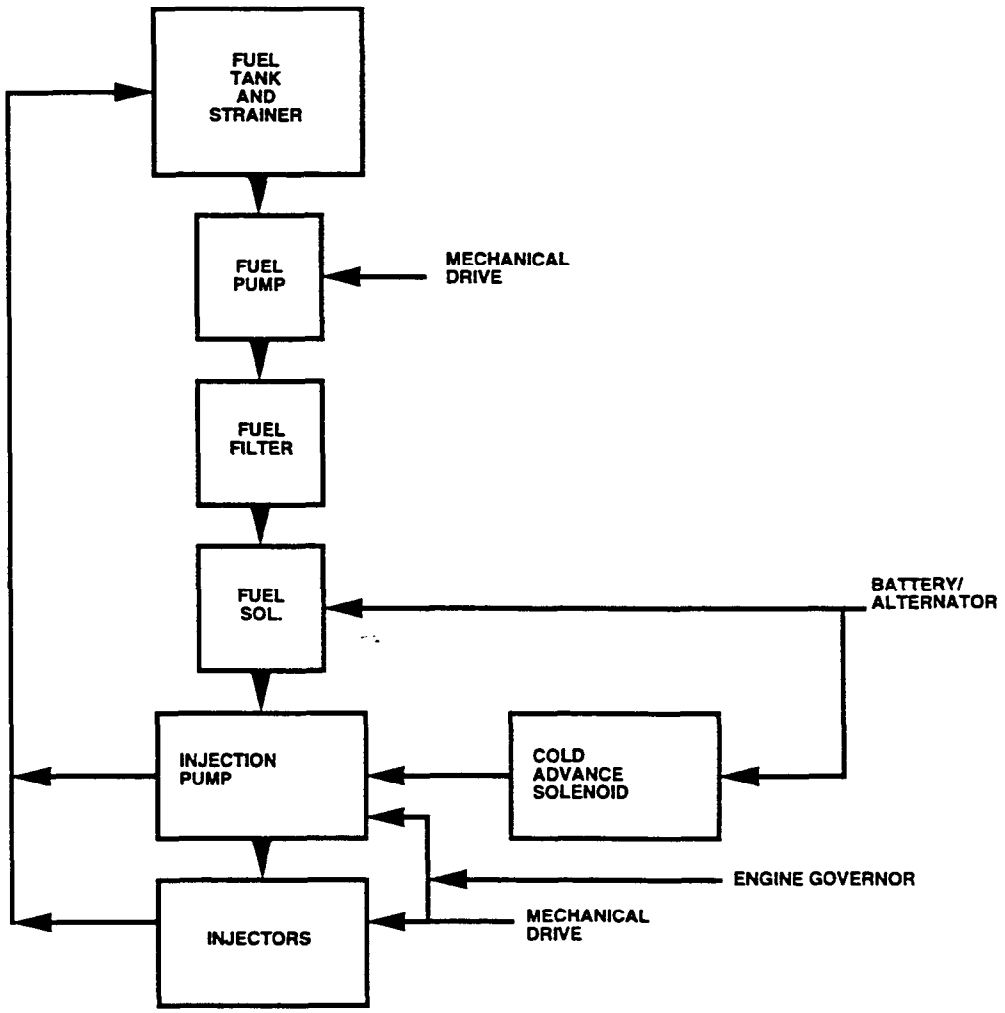

FUEL SYSTEM

DIAGNOSTIC FLOWCHART

START

!!

1

IS THE FUEL SUPPLY AND QUALITY OK?

KNOWN INFO

NOTHING

POSSIBLE PROBLEMS

FUEL LINES
FUEL FILTER
FUEL PUMP
FUEL SOLENOID
INJECTION PUMP
INJECTORS

TEST OPTIONS

VISUAL INSPECTION, SAMPLED WHILE CRANKING OR RUNNING. THIS QUESTION ONLY CHECKS THE SUPPLY OF FUEL IN THE TANK AND TESTS TO SEE IF IT IS GETTING TO THE INJECTOR PUMP. THIS IS NOT A TEST OF FUEL PRESSURE.

REASON FOR QUESTION

Without a supply of good fuel, none of the components in the fuel system can be expected to work properly.

NO → GO TO A, Page 2-108

YES ↓

2

DOES THE ENGINE START AND STAY RUNNING?

KNOWN INFO

FUEL AVAILABLE AND NOT CONTAMINATED

POSSIBLE PROBLEMS

COLD ADVANCE
GLOW PLUGS
FUEL LINES
FUEL FILTER
FUEL PUMP
INJECTION PUMP
FUEL SOLENOID
RETURN CHECK VALVE

TEST OPTIONS

TRY STARTING THE ENGINE.

REASON FOR QUESTION

If it starts, you know that there is fuel available and the fuel solenoid is working.

NO → GO TO B, Page 2-110

YES ↓

3

DOES THE ENGINE START EASILY WHEN COLD?

KNOWN INFO

FUEL SOLENOID OK
FUEL OK

POSSIBLE PROBLEMS

COLD ADVANCE
FUEL LINES
FUEL FILTER
FUEL PUMP
INJECTION PUMP
INJECTORS

TEST OPTIONS

TRY STARTING THE ENGINE WHILE IT'S COLD.

REASON FOR QUESTION

Problem may be the cold advance circuit.

NO → GO TO C, Page 2-114

YES ↓

GO TO 4, Page 2-102

REFERENCE INFORMATION

MAKE SURE ALL ELECTRICAL CONNECTIONS ARE CLEAN AND TIGHT. CHECK FUEL SOLENOID, COLD ADVANCE SOLENOID, BATTERIES, ROTARY SWITCH, ETC.

1. While cranking or running the engine, open the drain fitting and drain some fuel into a clear container.
2. The fuel should come out of the open drainvalve in a steady stream. If it doesn't, then answer NO to this question.
   - NOTE: Nothing will come out unless the engine is running or cranking.
3. Close the drainvalve and turn the rotary switch to STOP.
4. Check the fuel that came out to be sure that it isn't contaminated with water or dirt.
5. If the fuel didn't come out in a steady stream or if it is contaminated, answer NO to this question.

If you have trouble starting the engine, you should have entered here by way of the startability tests. If you didn't begin there, go back to page 2-45 and run the startability top level test.

At this point, you don't care how well it starts or runs but just that it will run.

The answer to this question is NO if the engine seems to start but stops almost immediately.

Engine temperature may be determined from vehicle temp. gauge (rotary switch must be in RUN position) or by touching the engine. If it is too hot to touch comfortably, it is above 120° F (49° C).

Hard starting can be caused by other things such as fuel in the lines leaking back into the tank while the engine is shut down. This will occur if there is an air leak in the lines.

FUEL SYSTEM

WARNING

Diesel fuel is highly flammable. Do not perform any procedures near fire, flames, or sparks. Severe injury or death will result.

WARNING

A hot engine may cause serious burns. Always use caution when approaching a hot engine.

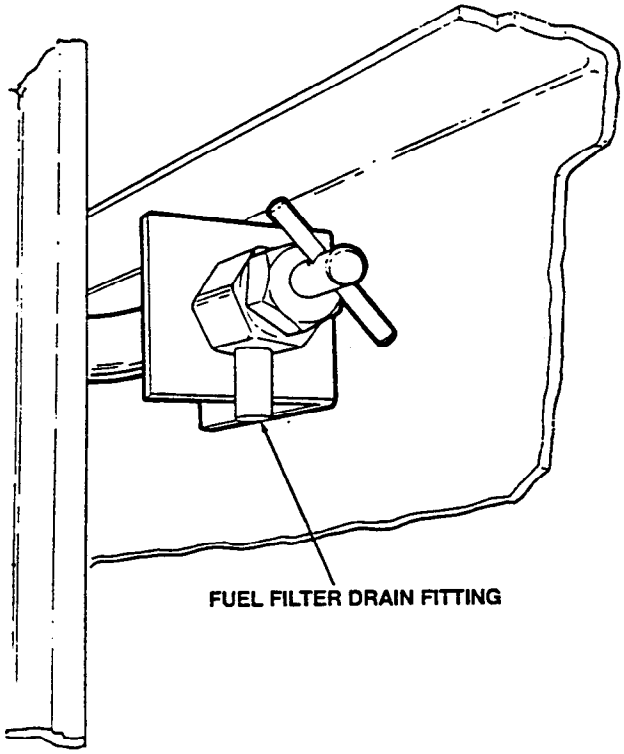

FUEL SYSTEM

DIAGNOSTIC FLOWCHART

FROM 3, Page 2-100

4

IS THE FUEL SUPPLY PRESSURE GREATER THAN 3 PSI (20.69 kPa) AT ALL SPEEDS?

KNOWN INFO

FUEL SOLENOID OK
COLD ADVANCE OK

POSSIBLE PROBLEMS

FUEL LINES
FUEL FILTER
FUEL PUMP

TEST OPTIONS

1. STE/ICE-R TEST 24 (Page 2-494)
2. PRESSURE GAUGE

REASON FOR QUESTION

This is to verify that the fuel supply lines, fuel pump, and fuel filter are OK.

NO → GO TO D, Page 2-116

YES ↓

5

IS THE FUEL VOLUME AT THE INJECTION PUMP INLET 1 PINT IN 30 SECONDS WHILE CRANKING?

KNOWN INFO

FUEL SOLENOID OK
COLD ADVANCE OK

POSSIBLE PROBLEMS

FUEL LINES
FUEL FILTER
FUEL PUMP

TEST OPTIONS

Fuel pump volume test

REASON FOR QUESTION

This is to verify that the fuel supply lines, fuel pump, and fuel filter are OK.

NO → GO TO D, Page 2-116

YES ↓

6

DOES THE ENGINE RUN SMOOTHLY?

KNOWN INFO

FUEL PUMP
AND FILTER OK

POSSIBLE PROBLEMS

INJECTION PUMP
INJECTORS
FUEL SUPPLY LINES
FUEL RETURN LINES
RETURN CHECK VALVE

TEST OPTIONS

WATCH AND LISTEN TO ENGINE.

REASON FOR QUESTION

If it runs smoothly, then it is not an individual cylinder fault such as a bad injector.

NO → GO TO E, Page 2-120

YES ↓

7

IS THE IDLE SPEED 700 TO 750 RPM?

KNOWN INFO

FUEL LINES, PUMP
AND FILTER OK

POSSIBLE PROBLEMS

INJECTION PUMP
INJECTORS
EXHAUST RESTRICTED

TEST OPTIONS

STE/ICE-R TEST 10 (Page 2-490)

REASON FOR QUESTION

This is to verify that the idle speed is adjusted properly.

NO → SEE INFORMATION AT RIGHT.

YES ↓

GO TO 8, Page 2-104

REFERENCE INFORMATION

FUEL SYSTEM

Watch the fuel pump pressure while slowly accelerating the engine from idle to maximum speed. The pressure should always be greater than zero. If you can drive the vehicle while measuring the pressure, check to be sure it is still above zero even during maximum acceleration (maximum engine power). You can use STE/ICE-R test 24 with control function 02 (minimum).

NOTE

Rapidly accelerating the engine with the transmission in neutral doesn't work for this engine because the fuel supply can't increase as fast as the engine can accelerate so you won't get good test results.

Proper engine performance depends upon the availability of the correct fuel volume to the injection pump.

Pay attention to when the engine runs rough. If it runs rough only while warming up after a cold start, it may be a glow plug problem and you should run the Glow Plug Circuit tests.
Rough running may also be caused by air leaks in the fuel supply lines. Air in the fuel should purge itself while idling. If rough running occurs after a period of high speed or high power running but seems to go away after idling, then look for air leaks in the fuel supply lines and fittings. If rough running occurs while driving but idles ok, check the fuel return check valve for any malfunctions (para. 3-36).

Try to adjust the engine idle speed by turning the idle speed screw (para. 3-45). Continue testing if you can adjust the speed properly. If you cannot, notify DS maintenance (chapter 14).

Engine must be at normal operating temperature when making speed checks. Air filter must be in place and all accessories (lights, heater fan, etc.) must be turned off.
This engine has a min-max governor which controls engine speed at both idle and full throttle.

FUEL PUMP VOLUME TEST

1. Disconnect fuel line at injection pump inlet and route fuel line into a suitable 1 quart (1 liter) container.
2. Crank the engine for 30 seconds.
3. If the pump and lines are ok, you should get about 1 pint (1/2 quart) (.5 L) in 30 seconds.

FUEL PUMP PRESSURE STE/ICE-R TEST 24

(STE/ICE already connected to DCA and turned on)

1. Select Fuel Supply Pressure test, Test 24.
2. Perform CAL.
3. Crank (or start) the engine.

NOTE : STE/ICE-R can display a pressure below 0. Be sure to notice if the display is negative.

FUEL PUMP PRESSURE TEST PRESSURE GAUGE

1. Connect a tee into the fuel line between the fuel filter outlet and the injection pump inlet.
2. Attach gauge to tee.
3. Crank (or start) engine.

ENGINE RPM STE/ICE-R TEST 10

1. Start Test 10, Engine RPM.
2. Crank or start the engine. Displayed reading is RPM. Cranking rpm should be at least 100 rpm. Idle rpm should be 700-750.

FROM 7, Page 2-102

8

KNOWN INFO

FUEL LINES, PUMP AND FILTER OK

POSSIBLE PROBLEMS

INJECTION PUMP
INJECTORS
EXHAUST RESTRICTED

IS MAXIMUM GOVERNOR SPEED
4,000 RPM NO LOAD?
3,600 LOADED?

TEST OPTIONS

STE/ICE-R TEST 10 (Page 2-490)

REASON FOR QUESTION

Verify governor speed.

NO → GO TO F, Page 2-124

YES

9

KNOWN INFO

FUEL PUMP OK
FUEL FILTER OK

POSSIBLE PROBLEMS

INJECTION PUMP
INJECTORS
RETURN CHECK VALVE

IS ENGINE POWER OK?

TEST OPTIONS

1. STE/ICE-R TEST 13 (Page 2-492)
2. ROAD TEST

REASON FOR QUESTION

Some fuel system faults and bad fuel may cause low power and have passed the earlier tests.

NO → GO TO F, Page 2-124

YES

10

KNOWN INFO

INJECTION PUMP OK

POSSIBLE PROBLEMS

INJECTORS
AIR CLEANER
PUMP TIMING
CDR VALVE
RETURN CHECK VALVE

IS THE EXHAUST COLORLESS?

TEST OPTIONS

VISUAL

REASON FOR QUESTION

Exhaust smoke may indicate conditions such as oil, water, or excessive fuel entering the cylinders.

NO → SEE INFORMATION AT RIGHT.

YES → GO TO 11, Page 2-106

REFERENCE INFORMATION

FUEL SYSTEM

ENGINE RPM
STE/ICE-R TEST 10

1. Start Test 10, Engine RPM.
2. Crank or start the engine. Displayed reading is RPM. Cranking rpm should be approximately 100-200. Idle rpm should be 700-750.

Governor no-load speed is with the transmission in neutral. Loaded speed is with the transmission in gear and the vehicle moving. It is the maximum rpm the engine will develop. The engine will surge at governor speed since the governor will try to lower the engine speed and the accelerator is trying to increase it.

ENGINE POWER TEST (PERCENT)
STE/ICE-R TEST 13

1. Set TEST SELECT switches to 13.
2. Press and release TEST button.
3. Wait for prompting message CIP to appear.
4. When CIP appears on display, press down sharply on engine accelerator and hold it to the floor. When VTM displays OFF, release accelerator.
5. A number will be displayed after the engine has returned to idle speed. This number is the test result in units of percent of nominal rated power.

A number over 75 is passing for STE/ICE-R test 13. If the vehicle seems to be low on power while driving, you have to check for other things which could cause this such as the transmission.
To try a road test, accelerate the vehicle from 0 to a safe and reasonable speed on a reasonably level road.

If the exhaust is not colorless, it must be either white, blue, or black. If exhaust color is:

WHITE..... Go to G, page 2-126. Also could be injector timing. Notify DS maintenance (chapter 14).

BLUE..... Blue smoke is a sign of oil entering the combustion chambers. It usually enters past the piston rings or intake valve stem seals. This is an internal engine problem that can't be handled at this level of maintenance. You may want to run the engine running tests, page 2-51, before you notify DS maintenance (chapter 14).

BLACK..... Air intake/exhaust, page 2-141.

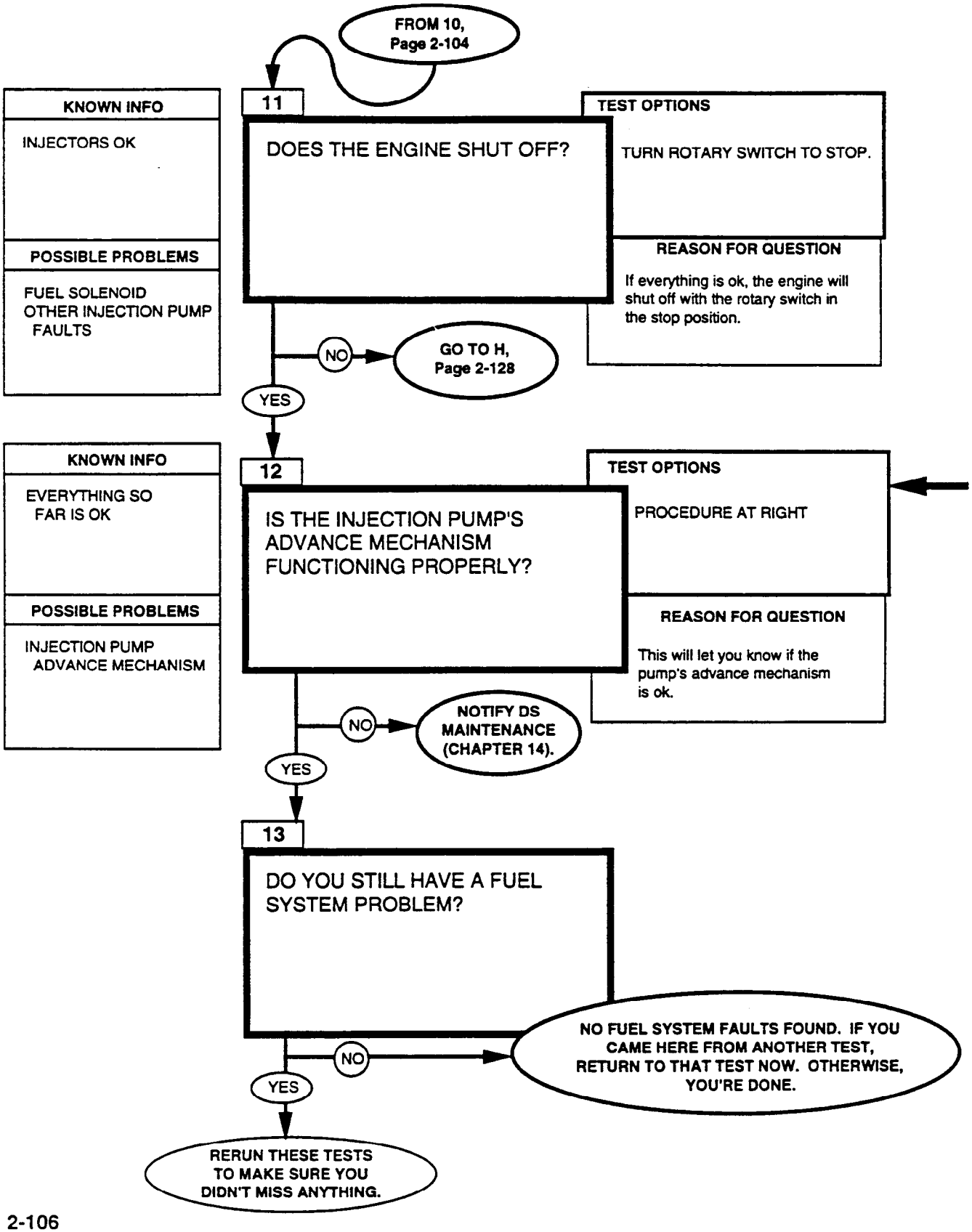
FROM 10, Page 2-104
11
DOES THE ENGINE SHUT OFF?
KNOWN INFO
INJECTORS OK
POSSIBLE PROBLEMS
FUEL SOLENOID
OTHER INJECTION PUMP FAULTS
TEST OPTIONS
TURN ROTARY SWITCH TO STOP.
REASON FOR QUESTION
If everything is ok, the engine will shut off with the rotary switch in the stop position.
NO
GO TO H, Page 2-128
YES
12
IS THE INJECTION PUMP'S ADVANCE MECHANISM FUNCTIONING PROPERLY?
KNOWN INFO
EVERYTHING SO FAR IS OK
POSSIBLE PROBLEMS
INJECTION PUMP ADVANCE MECHANISM
TEST OPTIONS
PROCEDURE AT RIGHT
REASON FOR QUESTION
This will let you know if the pump's advance mechanism is ok.
NO
NOTIFY DS MAINTENANCE (CHAPTER 14).
YES
13
DO YOU STILL HAVE A FUEL SYSTEM PROBLEM?
NO
NO FUEL SYSTEM FAULTS FOUND. IF YOU CAME HERE FROM ANOTHER TEST, RETURN TO THAT TEST NOW. OTHERWISE, YOU'RE DONE.
YES
RERUN THESE TESTS TO MAKE SURE YOU DIDN'T MISS ANYTHING.

1. Note engine rpm reading (STE/ICE-R TEST 10).
2. Gently depress rocker arm on pump towards injection pump.
3. If mechanism is functioning properly, rpm will decrease.
4. If mechanism doesn't move freely, try putting a drop of oil in the two spots indicated. Gently try to depress rocker arm again.

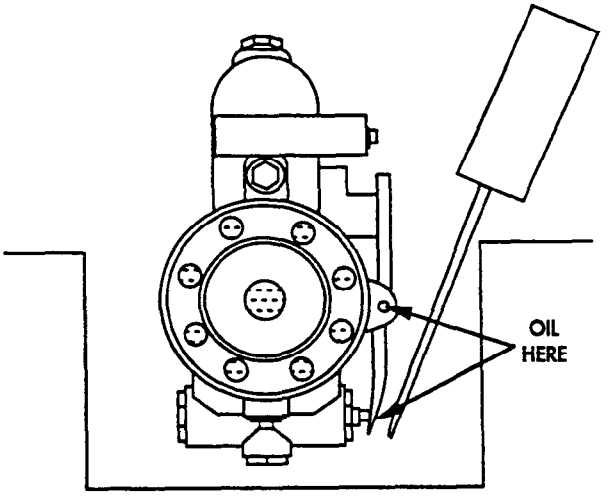

INJECTION PUMP AS SEEN FROM REAR OF ENGINE. GENTLY PRESS SCREWDRIVER AGAINST ARM. USE A 10-IN. SCREWDRIVER.

FUEL SYSTEM

DIAGNOSTIC FLOWCHART

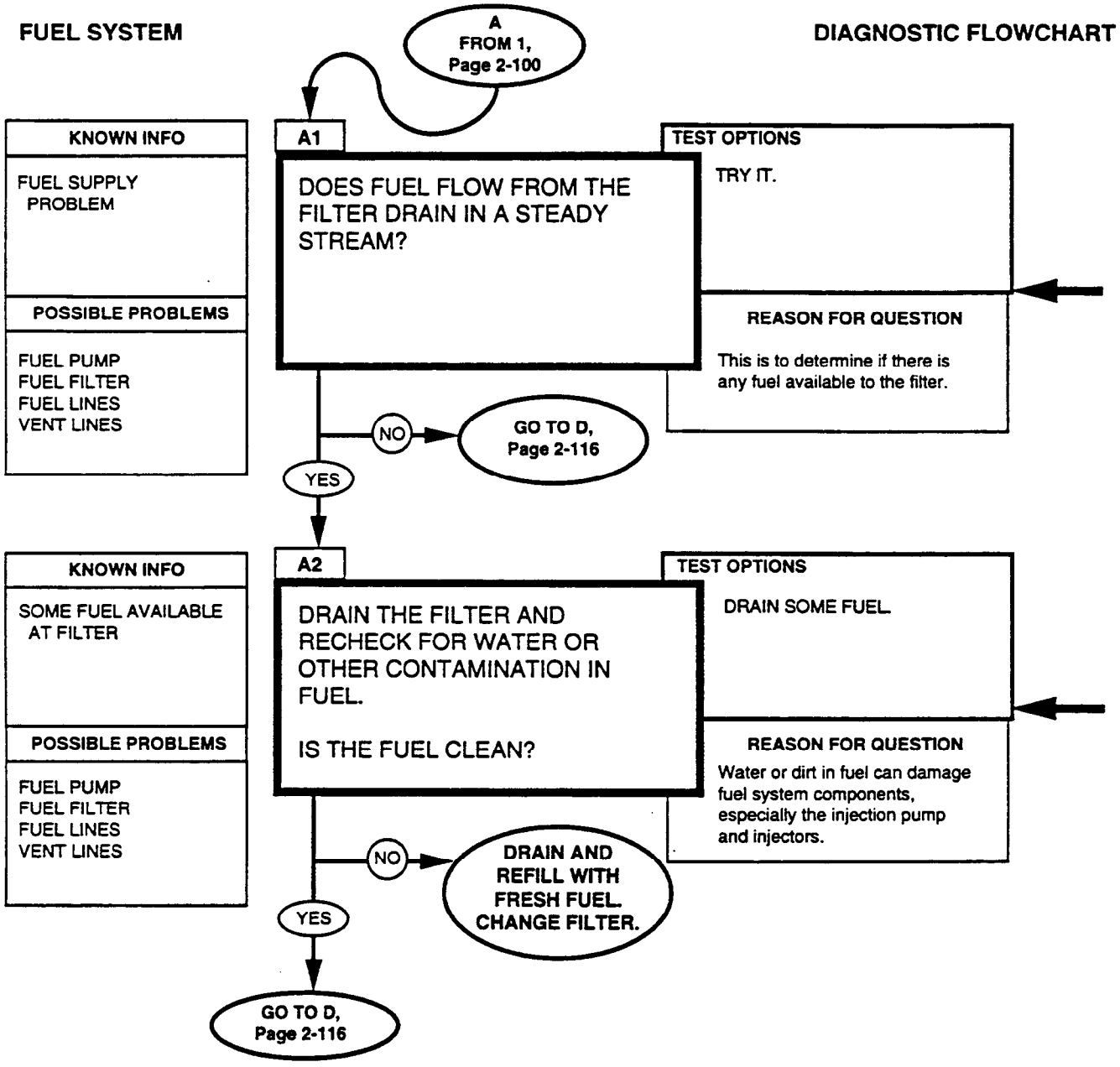

If no fuel arrives when cranking engine, the diaphragm in the lift pump may be ruptured, allowing the fuel to drain back into the tank.

There may be some water or dirt trapped in the filter already that didn't come from the fuel that is in the tank now.
Open the filter drainvalve and crank the engine for approximately 5 seconds to purge the filter, then take a fuel sample in a clear container.
Inspect the sample for water and dirt.
Replace fuel filter (para. 3-34).

FUEL SYSTEM

DIAGNOSTIC FLOWCHART

B
FROM 2,
Page 2-100

B1

KNOWN INFO

ENGINE DOESN'T STAY RUNNING

POSSIBLE PROBLEMS

FUEL PUMP
FUEL SUPPLY LINES
FUEL RETURN LINES
FUEL FILTER
FUEL SOLENOID/WIRING
HIGH-PRESSURE SYSTEM

DISCONNECT THE GLOW PLUG CONTROLLER AND WIRE 569B FROM THE INJECTOR PUMP. MAKE SURE THAT WIRE 54A IS PROPERLY CONNECTED TO THE INJECTOR PUMP. WITH THE ROTARY SWITCH IN RUN POSITION, DO YOU HAVE AT LEAST 17.0 VOLTS DC FLOWING THROUGH WIRE 54A?

TEST OPTIONS

STE/ICE-R TEST 89
(Page 2-506)

MULTIMETER

REASON FOR QUESTION

Current through the wire quickly checks the integrity of the fuel system wiring. The normal reading will be about 1.3 to 1.5 amps.

NO → GO TO N, Page 2-136

YES ↓

B2

KNOWN INFO

OTHER SYSTEMS LISTED ABOVE OK

POSSIBLE PROBLEMS

FUEL PUMP
FUEL SUPPLY LINES
FUEL RETURN LINES
FUEL FILTER
FUEL SOLENOID/WIRING
HIGH-PRESSURE SYSTEM

RECONNECT THE ABOVE WIRES. CHECK FUEL PUMP PRESSURE AND VOLUME DURING CRANKING. IS PUMP PRESSURE GREATER THAN 3 PSI (20.69 kPa) AND FUEL VOLUME AT THE INJECTION PUMP INLET 1 PINT IN 30 SECONDS?

TEST OPTIONS

1. STE/ICE-R TEST 24 (Page 2-494)
2. FUEL PUMP VOLUME TEST

REASON FOR QUESTION

Positive pressure and volume indicate that fuel is present and supply lines and filter are not plugged. This is a test of the lift pump.

NO → GO TO D, Page 2-116

YES ↓

!!

B3

KNOWN INFO

FUEL PUMP OK
FUEL SUPPLY LINES OK
FUEL FILTER OK

POSSIBLE PROBLEMS

FUEL RETURN LINES
FUEL SOLENOID/WIRING
HIGH-PRESSURE SYSTEM

DOES THE ENGINE START AND STAY RUNNING WITH THE FUEL RETURN LINE (THE SHORT RUBBER LINE AT THE INJECTOR PUMP) DISCONNECTED?

TEST OPTIONS

PUT THE RETURN LINE IN A SUITABLE CONTAINER AND TRY STARTING THE ENGINE.

REASON FOR QUESTION

A restricted fuel return line will cause a pressure imbalance in the pump and prevent the engine from running.

NO → GO TO I, Page 2-130

YES ↓

GO TO B4, Page 2-112

REFERENCE INFORMATION

When using a multimeter to measure current through wire 54A, disconnect the wire. Set the ammeter to a scale of at least 5 amps DC. Connect the red lead of the multimeter to wire 54A and the black lead to ground. With the rotary switch in the RUN position, measure current. Be sure to read the correct scale. Return the switch to the STOP position. Disconnect the multimeter and reconnect wire 54A.

FUEL SUPPLY PRESSURE (PSI)
STE/ICE-R TEST 24

1. Select Fuel Supply Pressure Test (Test 24). Perform CAL.
2. Crank (or start) engine.

FUEL PUMP VOLUME TEST

1. Disconnect fuel line at injection pump inlet and route fuel line into a suitable, 1 quart container.
2. Crank the engine for 30 seconds.
3. If the pump and lines are ok, you should get about 1 pint (1/2 quart) (.5 L) in 30 seconds.

WARNING

Diesel fuel is highly flammable. Do not perform any procedures near fire, flames, or sparks. Severe injury or death will result.

1. Disconnect the return line and direct it into a suitable container.
2. Watch the fuel flow from the return line as you or an assistant try to start the engine.

DC CURRENT 0 - 45 VOLTS
STE/ICE-R TEST 89

1. Connect RED clip to the indicated test point; BLACK clip to negative or ground.
2. Start Test 89, DC Volts.
3. Displayed reading is in volts.

FUEL PUMP PRESSURE TEST
PRESSURE GAUGE

1. Connect a tee into the fuel line between the fuel filter outlet and the injection pump inlet.
2. Attach gauge to tee.
3. Crank (or start) engine.

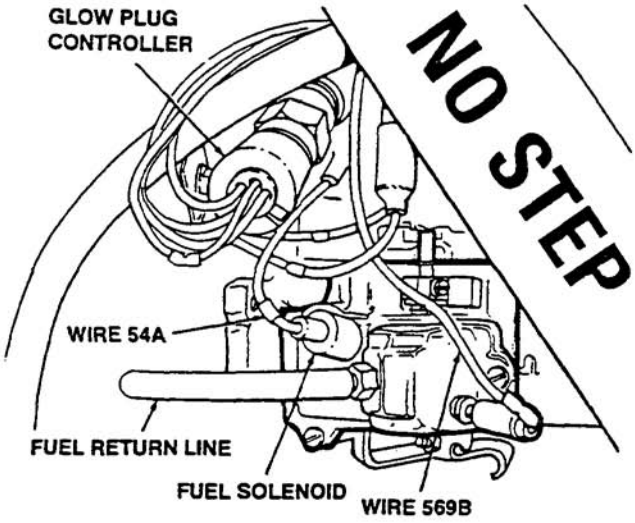

FROM B3, Page 2-110

KNOWN INFO

FUEL SOLENOID AND WIRING OK

POSSIBLE PROBLEMS

FUEL RETURN LINES
INJECTION PUMP
INJECTORS
RETURN CHECK VALVE

B4

DOES THE ENGINE RUN POORLY WITH THE RETURN LINE DISCONNECTED?

TEST OPTIONS

VISUAL

REASON FOR QUESTION

Plugged fuel return lines cause back pressure which prevents injection pump from working properly.

NO → REPAIR/REPLACE FUEL INJECTOR RETURN LINES.

YES

KNOWN INFO

RETURN LINES OK

POSSIBLE PROBLEMS

INJECTION PUMP
INJECTORS

B5

RUN THE INTAKE/EXHAUST TESTS. RETURN HERE IF NO FAULTS FOUND.

TEST OPTIONS

AIR INTAKE/EXHAUST TESTS (Page 2-141)

REASON FOR TESTS

There is still a possiblity of air intake/exhaust fault. If you came here from startability, this wasn't tested.

KNOWN INFO

RETURN LINES OK

POSSIBLE PROBLEMS

INJECTION PUMP
INJECTORS

B6

PERFORM STARTABILITY TEST.

RETURN HERE.

TEST OPTIONS

Run Startability Test Page 2-46.

REASON FOR TEST

Startability test will narrow possible problems down to injection pump or injectors.

GO TO B7, PAGE 112.2

Return lines should be inspected for kinks or crushed lines or anything that might restict fuel flow.

Inspect fuel return check valve for any restrictions. Replace valve (para. 3-36). Replace fuel lines (para. 3-26).

If you came here from the startability tests, return to STEP 5, page 2-48.

If you haven't run the startability tests yet, go to STEP 1, page 2-46.

FUEL SYSTEM

DIAGNOSTIC FLOWCHART

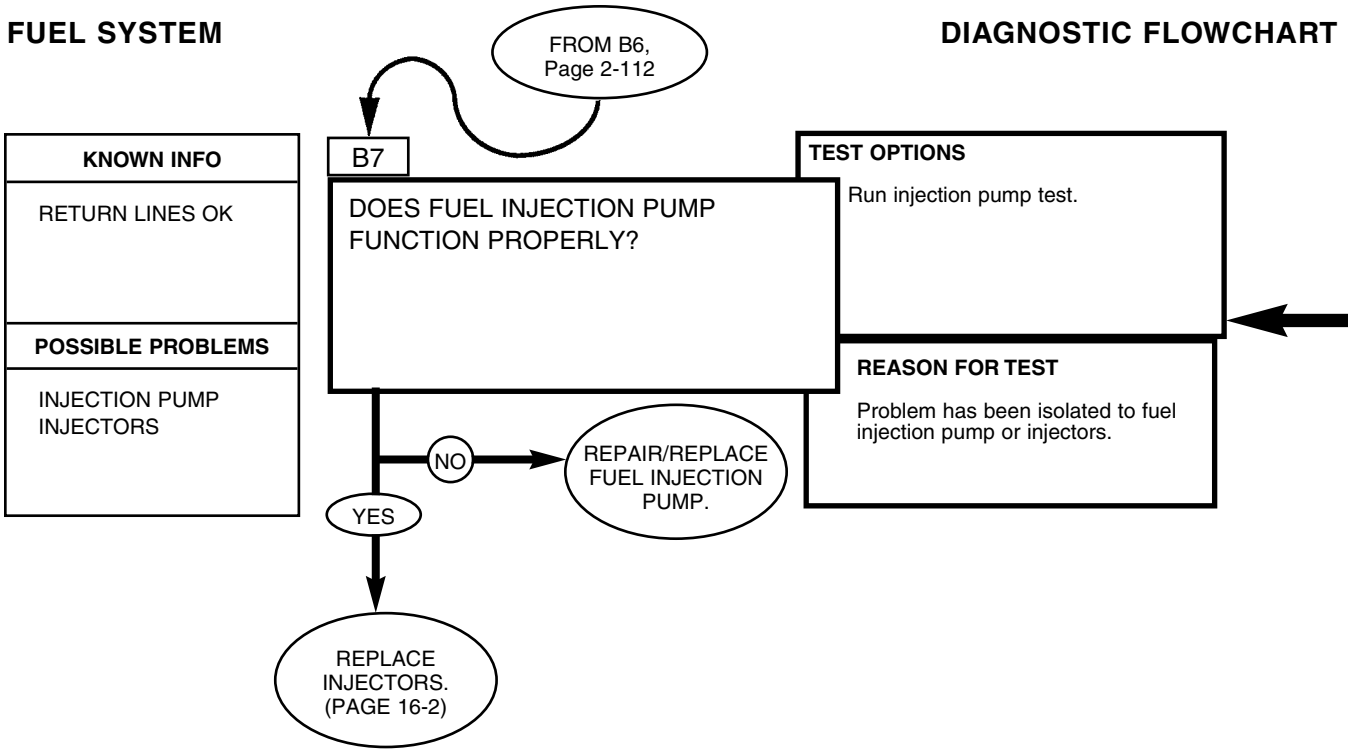

During high temperature and humidity, early model vehicles can experience difficulty starting while using JP-8 fuel. High temperatures can cause restrictive clearances in some older fuel injection head and rotor assemblies. The engine must be allowed to cool to allow adequate clearance of the pumping plungers to ensure adequate fuel delivery for starting. If this condition persists, run the startability tests. If vehicle passes all startability tests and troubleshooting procedures and still experiences difficulty in hot starting, identify the fuel injection pump and serial numbers.

All fuel injection pumps with P/N DB2831-5209, NSN 2910-01-467-9029 incorporated the improved head and rotor assembly, P/N 31506. If your serial number is less than shown in the Serial Number Break Column of the table below, the manufacturer recommends the fuel injection pump to be replaced, tagged as a “no hot restart” condition, and forward for rebuild. Notify direct support maintenance.

Model Pump P/N (NSN)	Serial Number Break	Original P/N	New P/N (NSN)
DB2831-5079 (2910-01-434-8597)	776848 96 thru 98	29124	31506 (2910-01-414-5382)
DB2831-5485 (2910-01-467-9085)	776848 99 and Above	29124	31506 (2910-01-414-5382)

FUEL SYSTEM **DIAGNOSTIC FLOWCHART**

C
FROM 3,
Page 2-100

C1

KNOWN INFO

HARD COLD STARTING

POSSIBLE PROBLEMS

COLD ADVANCE CIRCUIT
GLOW PLUG CIRCUIT
FUEL SYSTEM

DISCONNECT WIRE 569B FROM COLD ADVANCE SOLENOID. WITH ROTARY SWITCH IN RUN POSITION, IS THERE BATTERY VOLTAGE AT WIRE 569B?

TEST OPTIONS

1. STE/ICE-R TEST 89 (Page 2-506)
2. MULTIMETER

REASON FOR QUESTION

Need battery voltage to energize cold advance solenoid.

NO → GO TO M, Page 2-134

YES

C2

KNOWN INFO

POWER TO COLD ADVANCE SOLENOID

POSSIBLE PROBLEMS

COLD ADVANCE CIRCUIT
GLOW PLUG CIRCUIT
FUEL SYSTEM

RECONNECT WIRE 569B. IS THE COLD ADVANCE CIRCUIT WORKING?

TEST OPTIONS

PERFORM CHECKS AT RIGHT.

REASON FOR QUESTION

Cold advance circuit can cause hard cold starting.

NO → NOTIFY DS MAINTENANCE (CHAPTER 14).

YES

C3

KNOWN INFO

COLD ADVANCE CIRCUIT OK

POSSIBLE PROBLEMS

GLOW PLUG CIRCUIT
FUEL SYSTEM

RUN GLOW PLUGS CIRCUIT TESTS. IF NO FAULTS FOUND, CONTINUE FUEL SYSTEM TESTS.

TEST OPTIONS

1. GLOW PLUGS CIRCUIT TESTS (Page 2-289)
2. FUEL SYSTEM TESTS

REASON FOR TESTS

The glow plug circuit operates during cold start.

The engine temperature must be below 90° F (32°C) to get voltage here. If the engine is warm, either wait for it to cool, or go to step C3 at the bottom of the page and remember that the cold advance may be the problem if everything else checks out OK.

The glow plugs or the intake/exhaust system may be faulty, so you should test them first.

DC VOLTAGE 0-45 VOLTS STE/ICE-R TEST 89
1. Connect RED clip to positive, BLACK clip to negative or ground. 2. Start Test 89, DC Volts. 3. Displayed reading is in volts.

BATTERY VOLTAGE MULTIMETER
1. Set the voltmeter to a DC volts scale of at least 40 volts. 2. Connect the RED lead to positive and the BLACK lead to negative. 3. Be sure to read the correct scale.

The cold advance circuit advances the fuel injection pump timing approximately 3 to 5 degrees during cold start-up. If engine temperature is less than 90°F (32°C), then advance circuit operation may be checked as follows:

1. Start the engine.
2. Disconnect wire 569B from the advance solenoid. If the circuit is working correctly, then engine rpm should decrease.
3. Look at the advance mechanism on the right side of the fuel injection pump while you connect and disconnect 569B with the engine running. The advance mechanism should move about 1/4 in.
4. If the advance mechanism is stuck, apply some oil at the points shown and try again.

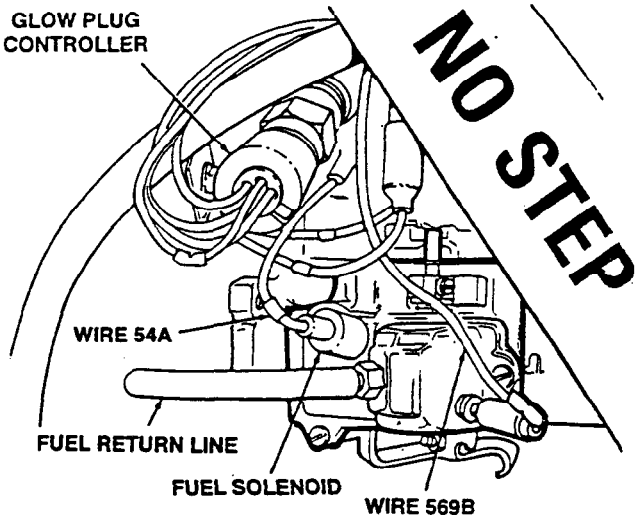

Remember to reconnect any wires that were disconnected during troubleshooting.

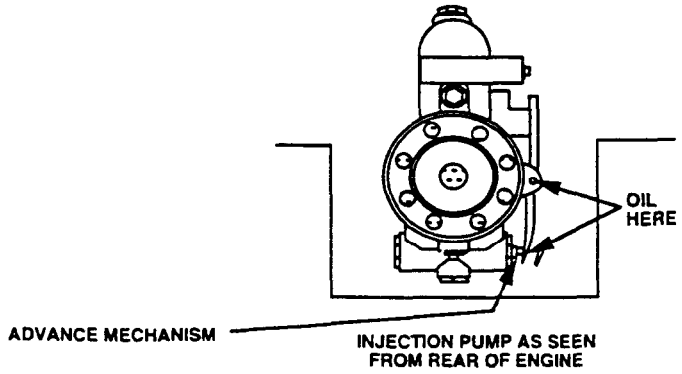

FUEL SYSTEM

DIAGNOSTIC FLOWCHART

D
FROM 4, 5, Page 2-102;
A1, A2, Page 2-108;
B2, Page 2-110

D1

KNOWN INFO

LOW FUEL PUMP PRESSURE

POSSIBLE PROBLEMS

FUEL PUMP
FUEL FILTER
FUEL LINES
VENT LINES
FUEL PRESSURE TRANSDUCER

LISTEN FOR A HISS WHEN YOU REMOVE THE FUEL FILLER CAP. CAN YOU REMOVE THE FILLER CAP WITHOUT HEARING A HISS?

TEST OPTIONS

VISUAL

REASON FOR QUESTION

A plugged vent line will eventually cause enough negative pressure in the tank to prevent fuel flow.

NO → REPLACE VENT FILTER/ REPAIR LINE.

YES ↓

D2

KNOWN INFO

VENT LINES OK
LOW FUEL PUMP PRESSURE

POSSIBLE PROBLEMS

FUEL PUMP
FUEL LINES
FUEL FILTER
FUEL PRESSURE TRANSDUCER

IS THE TEMPERATURE ABOVE 20°F (-7°C) ?

TEST OPTIONS

VISUAL

REASON FOR QUESTION

When the temperature is less than 20°F (-7°C), wax flakes can build up on the fuel tank strainer or in the fuel filter.

NO → CHECK FOR A WAX BUILD-UP IN TANK STRAINER OR FILTER. USE AN ANTIWAX AGENT IF AVAILABLE. BLEED FUEL SYSTEM AND CONTINUE TESTING.

YES ↓

D3

KNOWN INFO

FUEL FILTER OK
NO WAX BUILD-UP
VENT LINES OK
LOW FUEL PUMP PRESSURE
FUEL LINES

POSSIBLE PROBLEMS

FUEL PUMP
FUEL PRESSURE TRANSDUCER

IF YOU USED THE DCA TO MEASURE FUEL SUPPLY PRESSURE, IS THE STE/ICE-R, DCA, AND TRANSDUCER OK?

TEST OPTIONS

1. DCA TROUBLESHOOTING (Page 2-479)
2. USE A PRESSURE GAUGE TO MEASURE FUEL SUPPLY.

REASON FOR QUESTION

Before condemning fuel pump, make sure that the pressure transducer is working.

NO → REPAIR/REPLACE AS NECESSARY.

YES ↓

GO TO D4, Page 2-118

REFERENCE INFORMATION

If you hear a hissing noise while removing the fuel filter cap, either the vent filter is plugged, the vent line is restricted, or the vent valve is restricted. The vent filter is located behind the coolant surge tank.

Replace vent lines or vent line filter (para. 3-28).

Replace vent valve (para. 3-25).

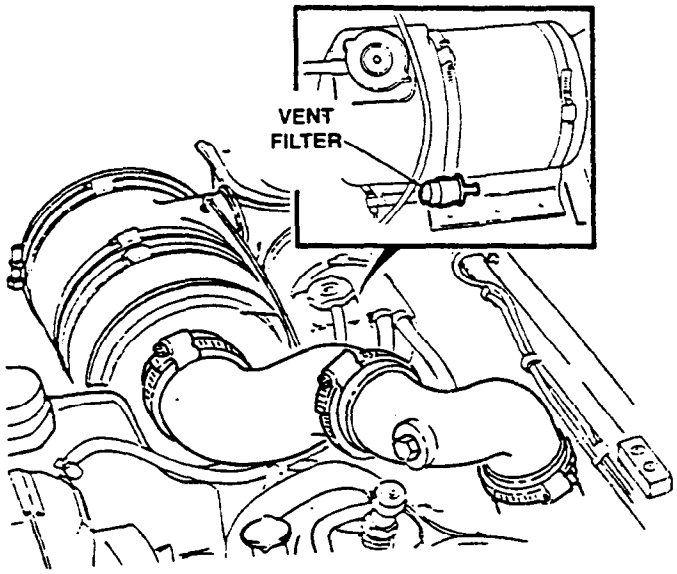

Diesel fuel is sensitive to temperature. All diesel fuel has a certain amount of paraffin-like components which have high energy value and help improve fuel economy. When temperatures are less than 20°F (-7°C), these components begin turning into wax flakes that can build up on the fuel tank strainer or in the fuel filter. If wax build-up is found, replace the fuel in the tank with a winter grade of fuel if available. You will have to remove the fuel tank if you need to inspect the tank strainer (para. 3-25).

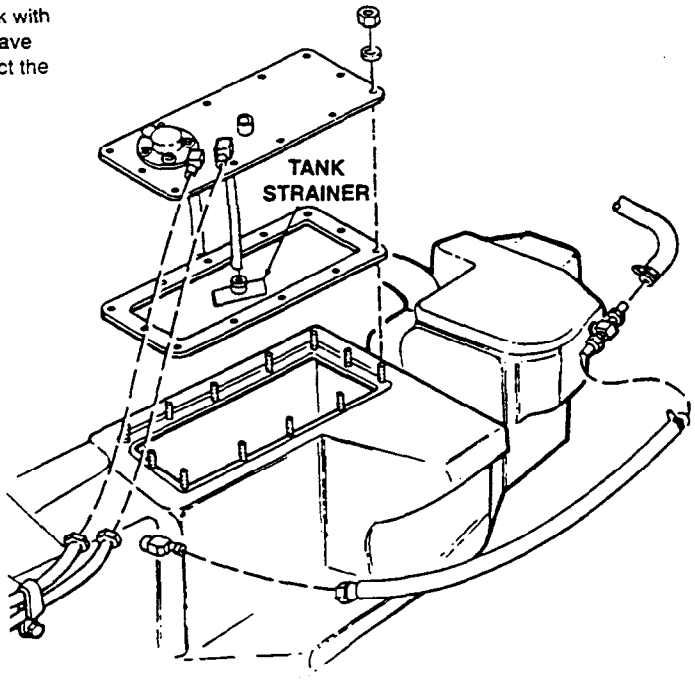

FUEL SYSTEM

DIAGNOSTIC FLOWCHART

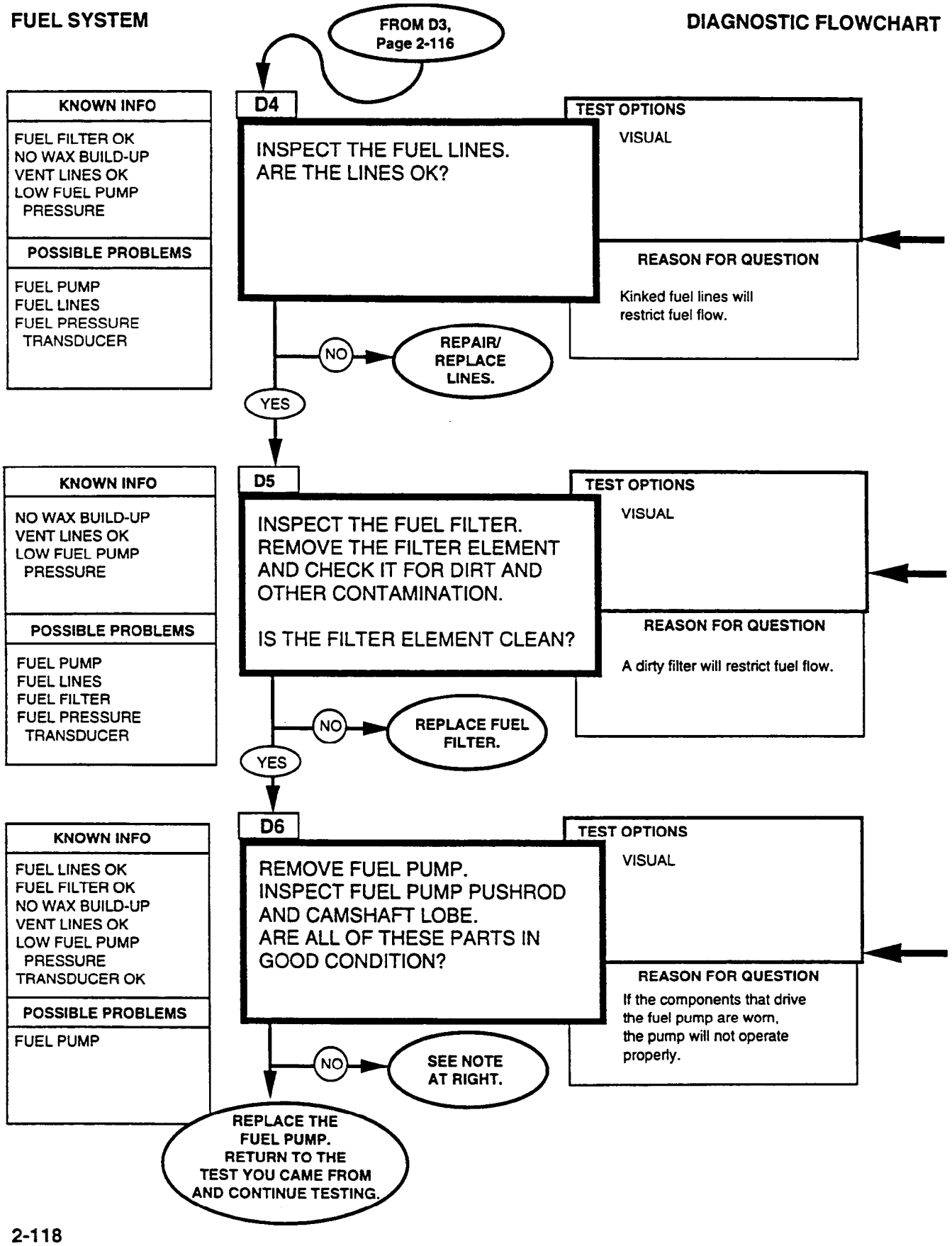

REFERENCE INFORMATION

FUEL SYSTEM

Fuel lines should be inspected for kinks, cracks, or anything that would restrict fuel flow or allow air to enter the lines. Be sure to check the lines all the way back to the tank and remember that there is a strainer inside the tank which can become plugged. You will have to remove the tank if it becomes necessary to check this.

Replace fuel lines (para. 3-26).

Poor starting and excessive smoke after start-up can be the result of a restricted fuel supply. This restriction most likely will be from a plugged fuel filter but can also be caused by a pinched or kinked fuel line. After the engine warms up, it generally will run satisfactorily. If the restriction gets progressively worse, top speed and performance will also be affected.

FUNGUS
In warm or humid weather, fungi and/or bacteria in the fuel can cause fuel system damage by plugging the fuel lines, filter, or injection nozzles.

For removal, replacement, and torques, refer to para. 3-34 or notify DS maintenance (chapter 16).

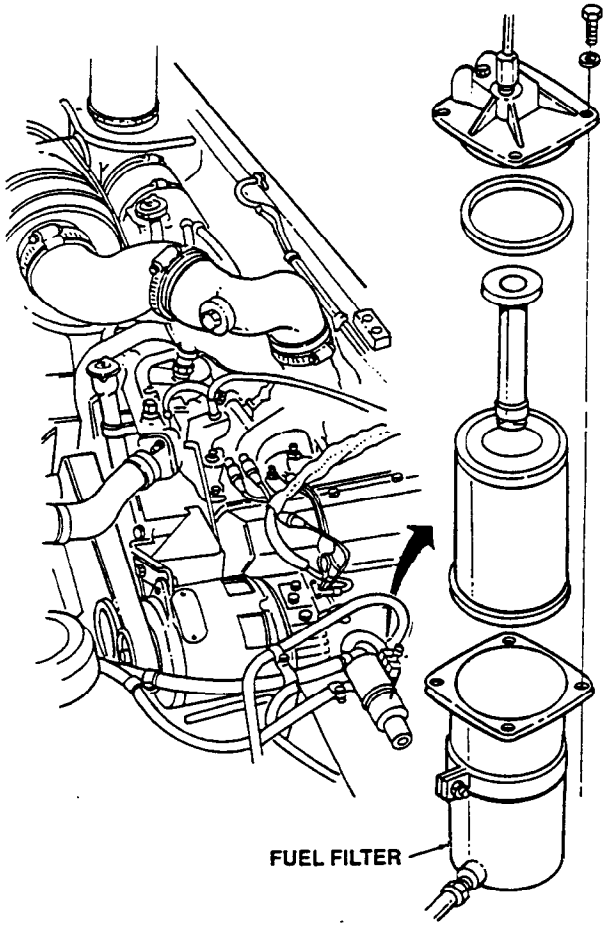

Excessive roughness on any of these parts is an indication of wear. The pushrod should slide smoothly in the engine block. If you notice any roughness on the end of the pushrod, be sure to check the lobe on the camshaft.

NOTE

If the pump or rod is worn, replace (para. 3-24). If the lobe on the camshaft is worn, notify DS maintenance (chapter 16).

Rerun Test Chain
You may have corrected some problems but there may be others including the fuel pump.

For removal, replacement and torques, refer to para. 3-24.

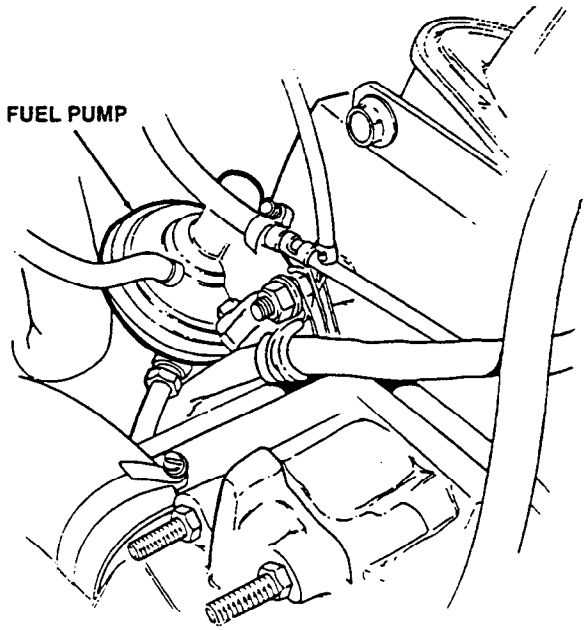

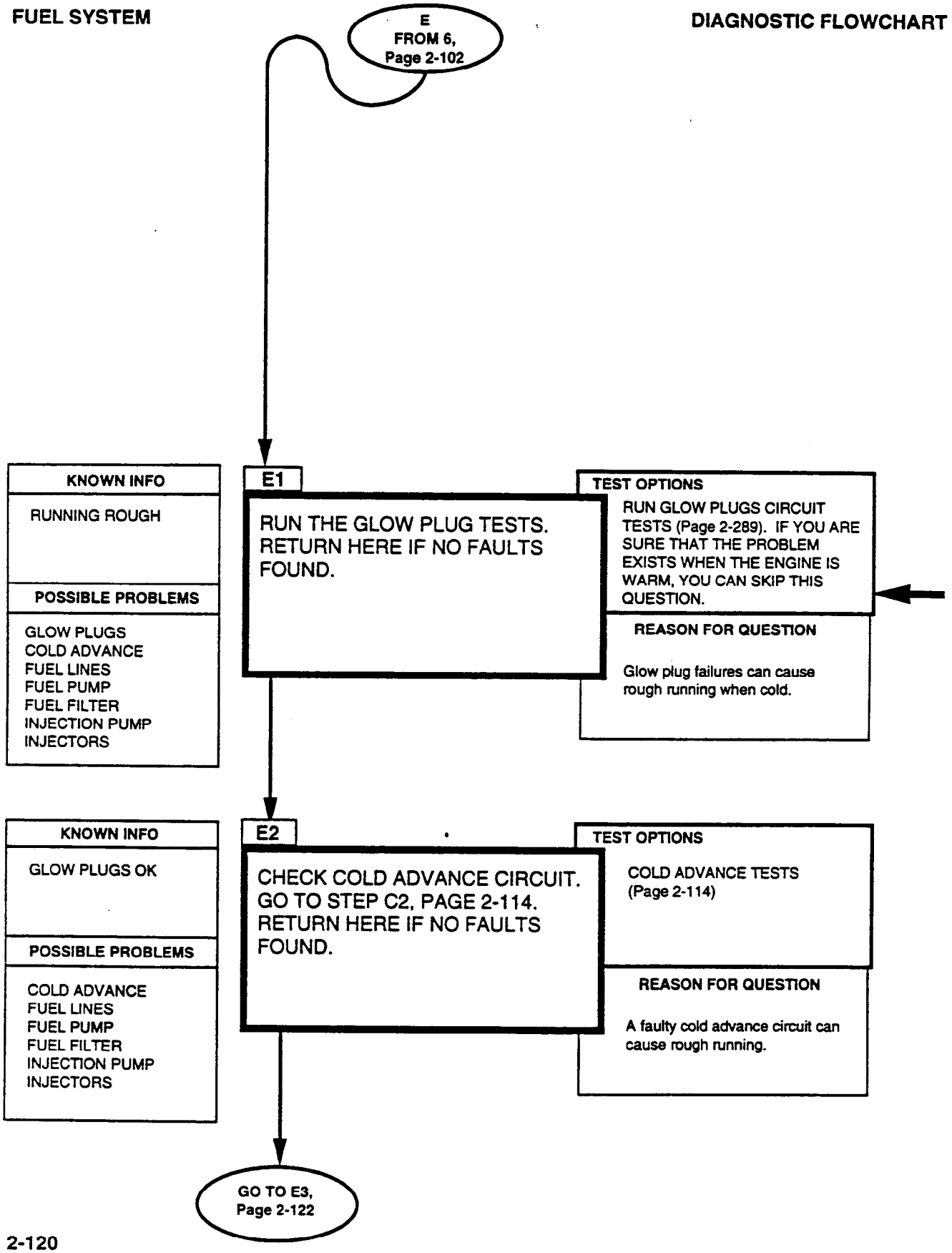
E
FROM 6,
Page 2-102
KNOWN INFO
RUNNING ROUGH
POSSIBLE PROBLEMS
GLOW PLUGS
COLD ADVANCE
FUEL LINES
FUEL PUMP
FUEL FILTER
INJECTION PUMP
INJECTORS
E1
RUN THE GLOW PLUG TESTS. RETURN HERE IF NO FAULTS FOUND.
TEST OPTIONS
RUN GLOW PLUGS CIRCUIT TESTS (Page 2-289). IF YOU ARE SURE THAT THE PROBLEM EXISTS WHEN THE ENGINE IS WARM, YOU CAN SKIP THIS QUESTION.
REASON FOR QUESTION
Glow plug failures can cause rough running when cold.
KNOWN INFO
GLOW PLUGS OK
POSSIBLE PROBLEMS
COLD ADVANCE
FUEL LINES
FUEL PUMP
FUEL FILTER
INJECTION PUMP
INJECTORS
E2
CHECK COLD ADVANCE CIRCUIT. GO TO STEP C2, PAGE 2-114. RETURN HERE IF NO FAULTS FOUND.
TEST OPTIONS
COLD ADVANCE TESTS (Page 2-114)
REASON FOR QUESTION
A faulty cold advance circuit can cause rough running.
GO TO E3,
Page 2-122

Injection pump timing that is too far advanced can cause glow plugs failure because it increases cylinder temperature. Usually several, but not all, glow plugs will fail.

FUEL SYSTEM

DIAGNOSTIC FLOWCHART

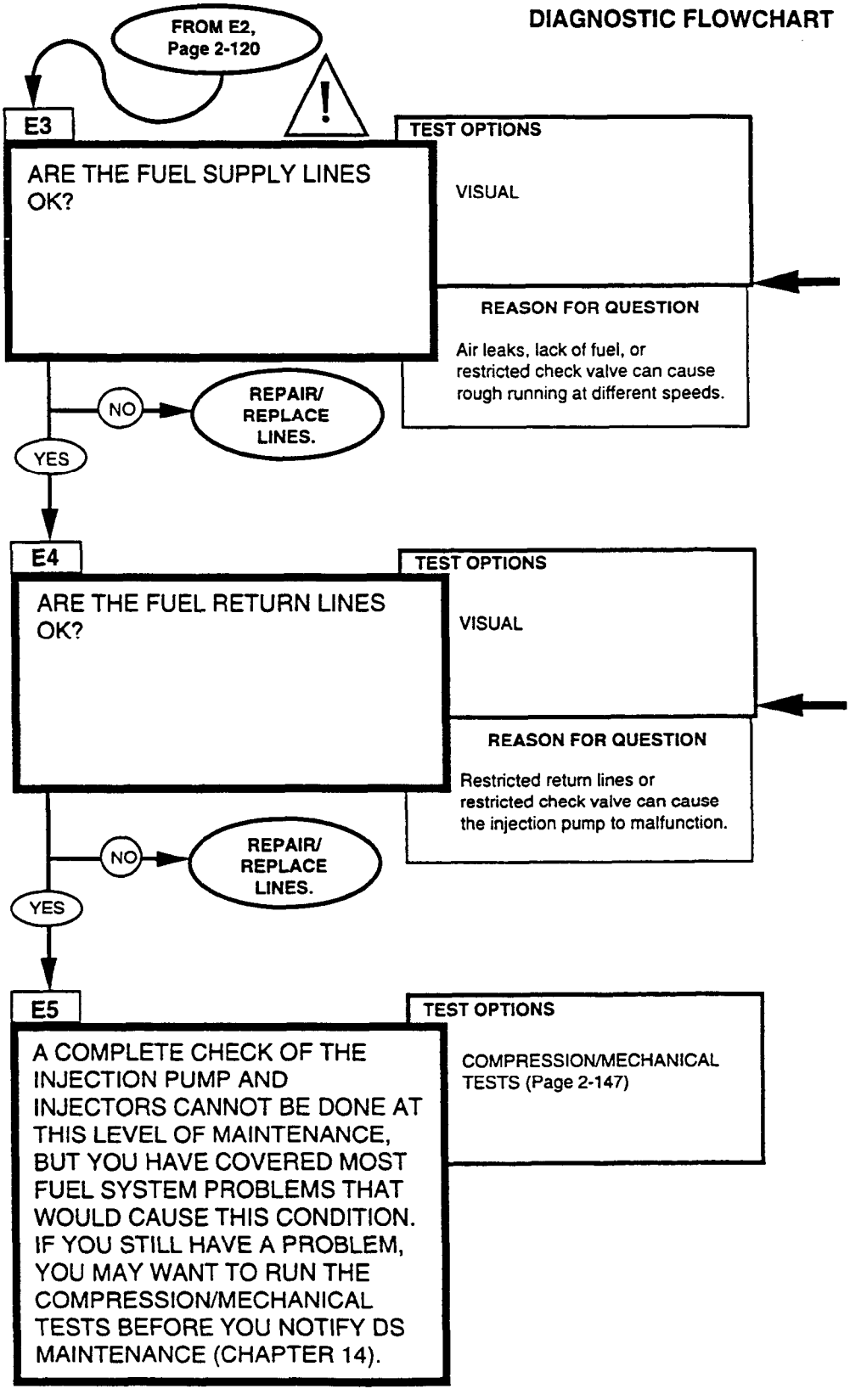

KNOWN INFO	POSSIBLE PROBLEMS
COLD ADVANCE OK	FUEL LINES FUEL PUMP FUEL FILTER INJECTION PUMP INJECTORS RETURN CHECK VALVE

KNOWN INFO	POSSIBLE PROBLEMS
SUPPLY LINES OK	FUEL LINES FUEL PUMP FUEL FILTER INJECTION PUMP INJECTORS RETURN CHECK VALVE

KNOWN INFO	POSSIBLE PROBLEMS
FUEL PUMP OK	INJECTION PUMP INJECTORS

REFERENCE INFORMATION

CAUTION

Be sure to keep the line clear of moving engine parts (fan, pulleys, etc.) and DO NOT place the line on the exhaust manifold.

Replace fuel lines (para. 3-26).

Check the filter vent screw for tightness.
Check the supply lines for kinks, cracks, leaks, or loose connections that could restrict fuel flow or allow air to enter the system. Remember that under certain operating conditions parts of the fuel system can be under vacuum so that loose connections that may not leak fuel can let air in.
To test for air leaks in the supply lines, disconnect the return line from the injection pump and connect a line that is long enough to reach the ground. Place the end of the line into a bucket containing diesel fuel, making sure that the end of the line is below the level of fuel in the bucket. Run the engine and watch for air bubbles in the bucket. You can also replace the short return line from the injector pump with a clear piece of tubing to check for bubbles.

Inspect the return lines for kinks or any other blockage that may restrict fuel flow.
Inspect fuel return check valve for any restrictions (para. 3-36).

Replace fuel line (para. 3-26).

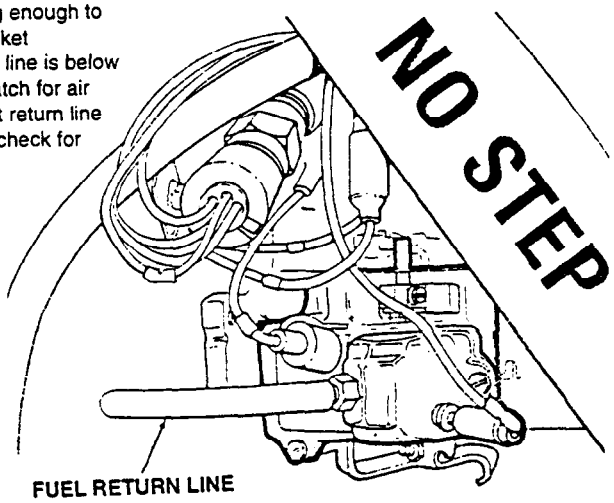

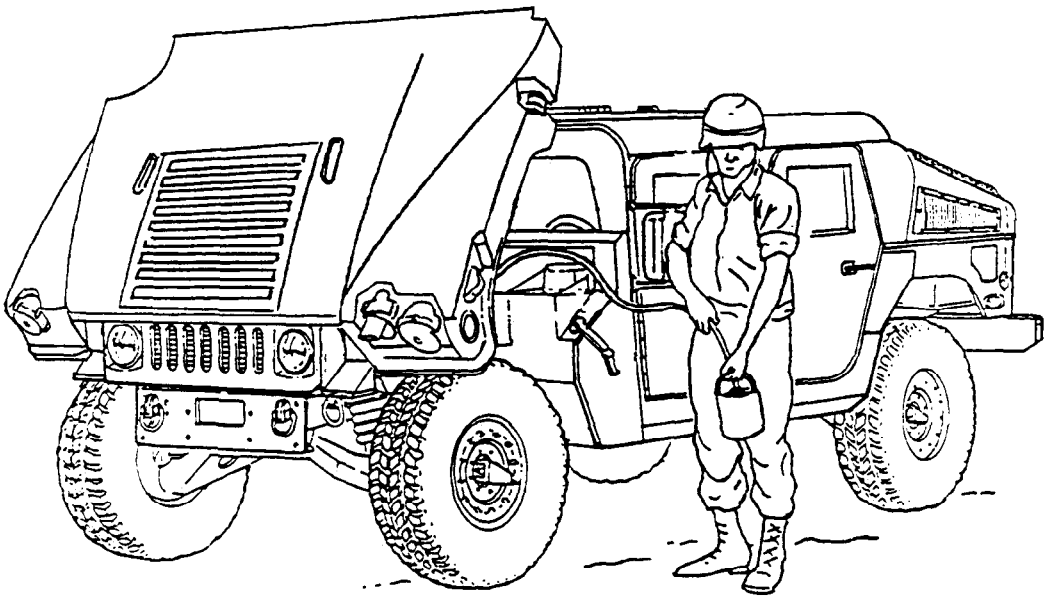

FUEL SYSTEM

DIAGNOSTIC FLOWCHART

F
FROM 8 or 9, Page 2-104

F1

INSPECT FUEL SUPPLY AND RETURN LINES.
ARE THE LINES OK?

KNOWN INFO

FUEL FILTER OK

POSSIBLE PROBLEMS

FUEL PUMP
ACCELERATOR LINKAGE
FUEL LINES
INJECTION PUMP
INJECTORS
INTAKE/EXHAUST
RETURN CHECK VALVE

TEST OPTIONS

VISUAL

REASON FOR QUESTION

Kinked fuel lines will restrict fuel flow. Partially blocked return lines may cause the injection pump to malfunction. Air leaking into the fuel will also cause loss of power.

NO → REPAIR/ REPLACE LINES.

YES ↓

F2

ARE THE INTAKE AND EXHAUST SYSTEMS OK?

KNOWN INFO

FUEL LINES OK
FUEL FILTER OK

POSSIBLE PROBLEMS

INTAKE/EXHAUST
FUEL PUMP
ACCELERATOR LINKAGE
INJECTION PUMP
INJECTORS

TEST OPTIONS

AIR INTAKE/EXHAUST TESTS (Page 2-141)

REASON FOR QUESTION

The intake and exhaust systems affect vehicle operation under all conditions.

NO → GO TO AIR INTAKE/EXHAUST TESTS, Page 2-141

YES ↓

F3

WITH ENGINE NOT RUNNING, CHECK MOVEMENT OF ACCELERATOR PEDAL.

DOES PEDAL HAVE FULL TRAVEL?

KNOWN INFO

FUEL PUMP OK
FUEL LINES OK
FUEL FILTER OK

POSSIBLE PROBLEMS

ACCELERATOR LINKAGE
INJECTION PUMP
INJECTORS

TEST OPTIONS

VISUAL

REASON FOR QUESTION

If the pedal sticks, you may not be able to fully open the throttle.

NO → SEE NOTE AT RIGHT.

YES ↓

NOTIFY DS MAINTENANCE (CHAPTER 14).

CAUTION

Be sure to keep the line clear of moving engine parts (fan, pulleys, etc.) and DO NOT place the line on the exhaust manifold.

Fuel lines should be inspected for kinks, cracks, or anything that would restrict fuel flow or allow air into the lines. Be sure to check the lines all the way back to the tank and remember that there is a strainer inside the tank which can also become plugged.

To test for air leaks in the supply lines, disconnect the return line from the injection pump and connect a line that is long enough to reach the ground. Place the end of the line into a bucket containing diesel fuel, making sure that the end of the line is below the level of fuel in the bucket. Run the engine and watch for air bubbles in the bucket. Replace fuel line (para. 3-26).

An important function of all hoses, lines, and fittings is to carry fuel without admitting air to the system. When the fuel tank cap is in place and the fuel pump and injection pump are drawing fuel through the lines, a low vacuum of 0-1 PSI is created. This occurs because the fuel which the engine uses must be replaced by air. During this vacuum condition, the slightest leak, which may not leak fuel out, could draw air into the system and, depending on the volume of air, cause a wide variety of engine malfunctions.

COLD WEATHER OPERATION

Diesel fuel is sensitive to temperature. All diesel fuel has a certain amount of wax-like components which have high energy value and help improve fuel economy. When temperatures are less than 20°F (-7°C), these components begin turning into flakes that can build up on the fuel tank strainer or in the fuel filter.

FUNGUS

In warm or humid weather, fungi and/or bacteria can cause fuel system damage by plugging the fuel lines, filter, or injection nozzles.

ODOR

Old fuel smells like varnish.

Check the accelerator pedal for full movement with no sticking or binding. If you have sticking or binding, lubricate accelerator pedal bushing and bearing with seasonal grade OE oil (TM 9-2320-387-10). If you do not have full pedal travel, disconnect the accelerator linkage from the fuel injection pump and recheck the travel. If you now have full travel, the problem is in the fuel injection pump and cannot be handled at this level of maintenance.

Operation of the injection pump and injectors cannot be verified at this level of maintenance.

FUEL SYSTEM

DIAGNOSTIC FLOWCHART

G
FROM 10,
Page 2-104

!!

G1

KNOWN INFO

WHITE SMOKE

POSSIBLE PROBLEMS

INJECTION TIMING
INTERNAL ENGINE PROBLEMS
FUEL QUALITY

DOES THE EXHAUST SMELL LIKE RAW FUEL?

TEST OPTIONS

PUT A PIECE OF PAPER IN THE EXHAUST STREAM THEN LOOK AT AND SMELL IT FOR SIGNS OF UNBURNT FUEL.

REASON FOR QUESTION

White smoke indicates fuel not being burned in the cylinders, or possible loss of coolant to the exhaust.

NO → GO TO J, Page 2-132

YES

G2

KNOWN INFO

WHITE SMOKE

POSSIBLE PROBLEMS

INJECTION TIMING
INTERNAL ENGINE PROBLEMS
FUEL QUALITY
RETURN CHECK VALVE

DOES THE EXHAUST SMOKE FOR MORE THAN 2 OR 3 MINUTES AFTER STARTING THE ENGINE?

TEST OPTIONS

VISUAL

REASON FOR QUESTION

Some white smoke after a cold start is normal. The colder it is, the more white smoke you'll see. The glow plugs keep cycling after the engine starts which will reduce this smoking. If you think that there is too much smoke after a cold start, run the glow plugs circuit tests (page 2-289), paying special attention to the afterglow operation.

NO → GO TO STEP 10, Page 2-104

YES

G3

KNOWN INFO

GLOW PLUGS OK
WHITE SMOKE

POSSIBLE PROBLEMS

ENGINE MECHANICAL

RUN THE GLOW PLUGS CIRCUIT TESTS. IF NO FAULTS FOUND, NOTIFY DS MAINTENANCE (CHAPTER 14).

TEST OPTIONS

GLOW PLUGS CIRCUIT TESTS (Page 2-289)

REASON FOR QUESTION

If the glow plugs are not functioning properly, the cylinders will not warm up as rapidly as they should.

WARNING

Be careful when performing this test. Exhaust gas can be extremely hot and severe burns can result.

Put a piece of paper in the exhaust stream for a few moments with the engine at idle. Then look at the paper to see if there is any condensed fuel on it. Then smell the paper to see if it smells like raw fuel. If it smells like fuel, the engine could be very cold or else it has a DS level fuel system fault or compression fault.

White smoke for a short time after start-up, especially on a cold day, is a normal condition. It is caused by incomplete combustion of the fuel because of low cylinder temperature. It should clear up in a few minutes. If not, you may have a bad head gasket, cracked block, or a restricted check valve. Check for restricted check valve (para. 3-36).

FUEL SYSTEM

DIAGNOSTIC FLOWCHART

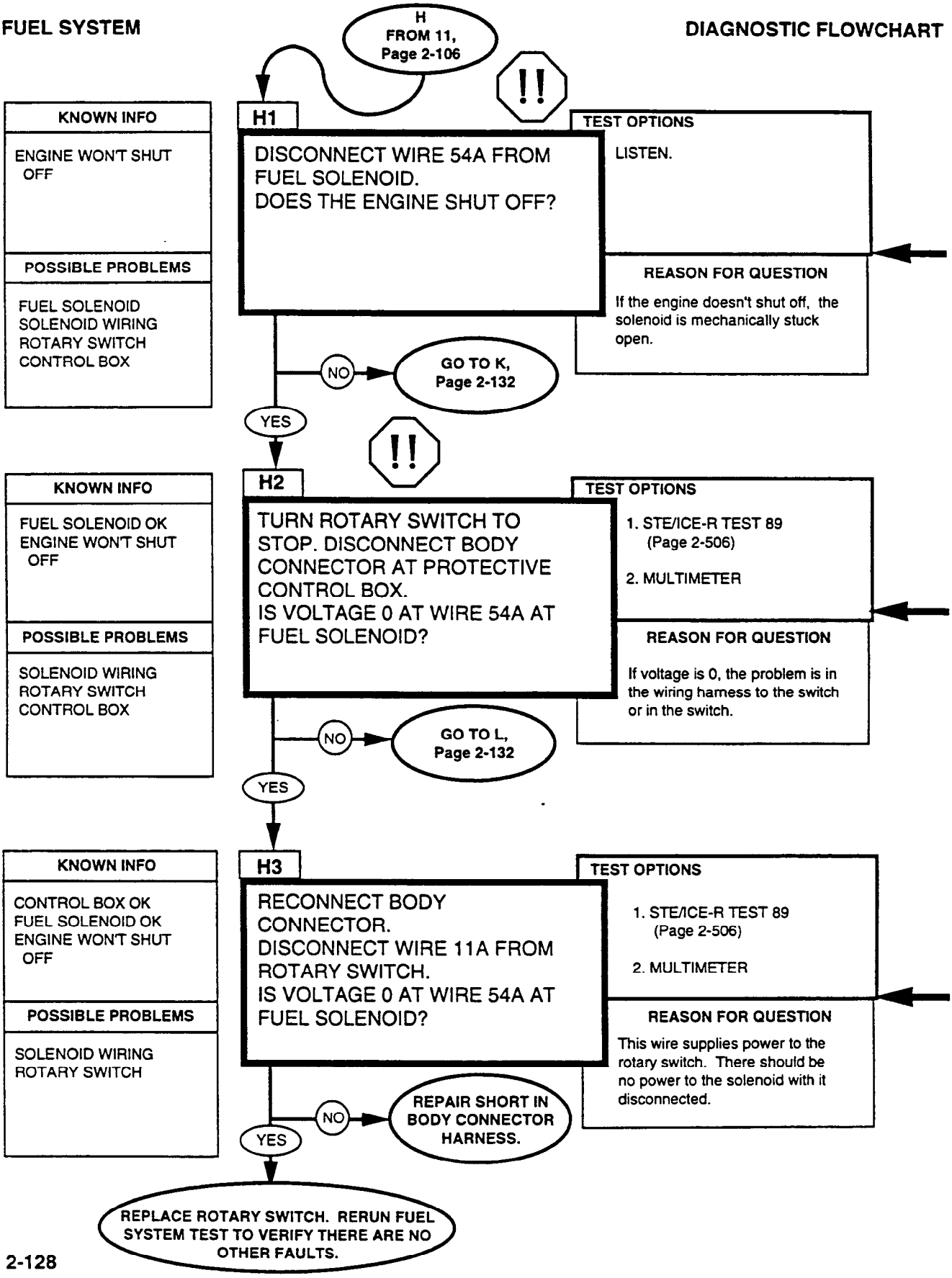

REFERENCE INFORMATION

WARNING

Keep hands away from engine fan. Moving fan blades can cause serious injury. Use extreme caution when engine is running.

WARNING

Disconnect negative battery cable before disconnecting and reconnecting protective control box harness.

WARNING

There is battery voltage at the PCB at all times. Failure to disconnect battery cable will result in damage to equipment or injury to personnel.

Rotary switch must remain in STOP position for the rest of these tests.

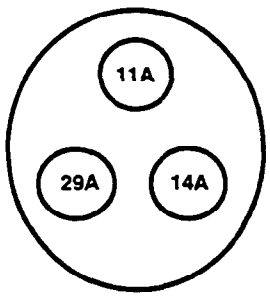

REAR OF ROTARY SWITCH

NOTE

Carefully inspect the body connector end of the harness for a short. Check for pushed out pins, broken or stripped insulation, or any other bare wires. If everything checks out OK, you have to replace the harness.

Remember to reconnect any wires that may have been disconnected during troubleshooting.

Repair harness (para. 4-80).

Replace rotary switch (para. 4-10).

DC VOLTAGE 0-45 VOLTS STE/ICE-R TEST 89
1. Connect RED clip to positive, BLACK clip to negative or ground. 2. Start Test 89, DC Volts. 3. Displayed reading is in volts.

DC VOLTAGE MULTIMETER
1. Set the voltmeter to a DC volts scale of at least 40 volts. 2. Connect the RED lead to positive and the BLACK lead to negative. 3. Be sure to read the correct scale.

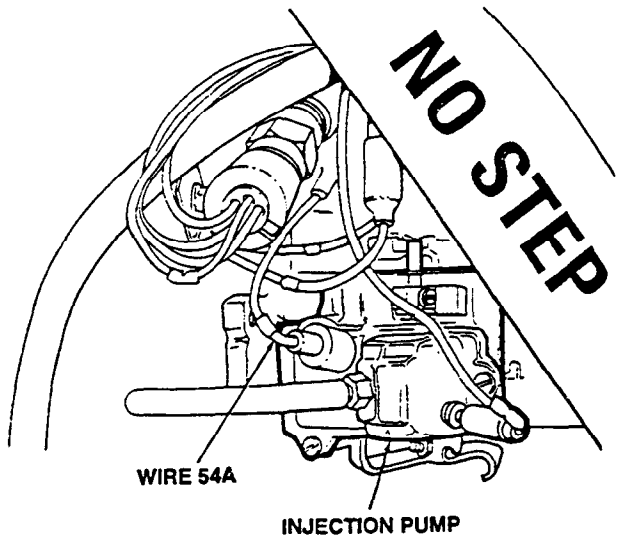

FUEL SYSTEM

DIAGNOSTIC FLOWCHART

I
FROM B3,
Page 2-110

I1

KNOWN INFO

FUEL SUPPLY OK
FUEL RETURN OK
SOLENOID WIRING

POSSIBLE PROBLEMS

FUEL SOLENOID
INJECTION PUMP
INJECTORS

DID A STREAM OF FUEL COME OUT OF THE INJECTOR PUMP RETURN LINE WHILE IT WAS CRANKING?

TEST OPTIONS

VISUAL

REASON FOR QUESTION

To see if there is fuel available to the injection pump.

NO → SEE INFORMATION AT RIGHT.

YES ↓

I2

KNOWN INFO

FUEL AVAILABLE TO THE INJECTION PUMP

POSSIBLE PROBLEMS

FUEL SOLENOID
INJECTION PUMP
INJECTORS
GLOW PLUGS
COLD ADVANCE

IS THE GLOW PLUGS CIRCUIT OK? (IF YOU DON'T KNOW, RUN THE GLOW PLUGS CIRCUIT TESTS; RETURN HERE IF NO FAULTS FOUND).

TEST OPTIONS

GLOW PLUGS CIRCUIT TESTS (Page 2-289)

REASON FOR QUESTION

On a cool day a faulty glow plug circuit will prevent the engine from starting.

NO → GO TO GLOW PLUGS, Page 2-289

YES ↓

I3

KNOWN INFO

GLOW PLUGS OK

POSSIBLE PROBLEMS

FUEL SOLENOID
INJECTION PUMP
INJECTORS
COLD ADVANCE

DISCONNECT WIRE 569B FROM THE COLD ADVANCE SOLENOID.

WITH ROTARY SWITCH IN THE RUN POSITION, DO YOU HAVE BATTERY VOLTAGE AT WIRE 569B?

TEST OPTIONS

1. STE/ICE-R TEST 89 (Page 2-506)
2. MULTIMETER

REASON FOR QUESTION

On a cold day, a faulty cold advance circuit will prevent the engine from starting.

NO → REPAIR 569B or REPLACE HARNESS.

YES ↓

FAULTY INJECTION PUMP; NOTIFY DS MAINTENANCE (CHAPTER 14).

REFERENCE INFORMATION

FUEL SYSTEM

Check the rubber return line from the injection pump to the steel tubing return line.

If the rubber line is not clogged, go to D1, page 2-116.

If the line is clogged, replace it. Start the engine and see if it stays running. If it doesn't start or stay running, return to J1 and continue testing. There may be another fuel system fault preventing fuel from reaching this point.

DC VOLTAGE 0-45 VOLTS STE/ICE-R TEST 89
1. Connect RED clip to the indicated test point, BLACK clip to negative or ground. 2. Start Test 89, DC Volts. 3. Displayed reading is in volts.

BATTERY VOLTAGE MULTIMETER
1. Set the voltmeter to a DC volts scale of at least 40 volts. 2. Connect the RED lead to positive and the BLACK lead to negative. 3. Be sure to read the correct scale.

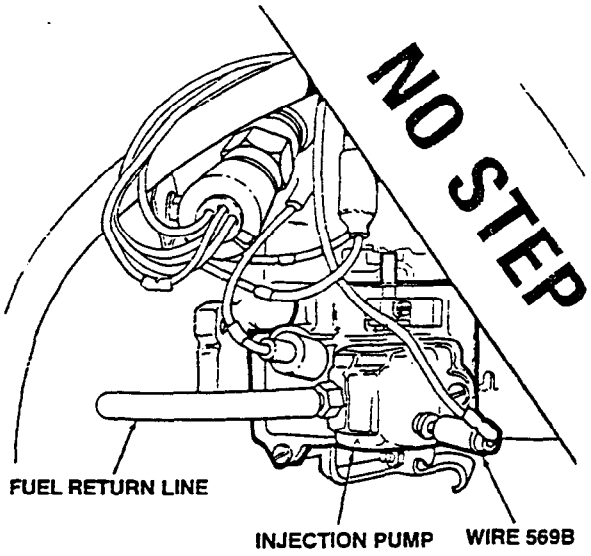

If the cold advance solenoid is getting power, the only possibilities that would keep the engine from starting are that fuel is not reaching the cylinders due to a fault in the high-pressure side of the fuel system or nearly all the cylinders have very low compression. It is unlikely that all the cylinders would lose compression at the same time, but you may want to run a Compression Unbalance test (STE/ICE-R Test 14) to check this.

Repair/replace harness (para. 4-80).

FUEL SYSTEM

DIAGNOSTIC FLOWCHART

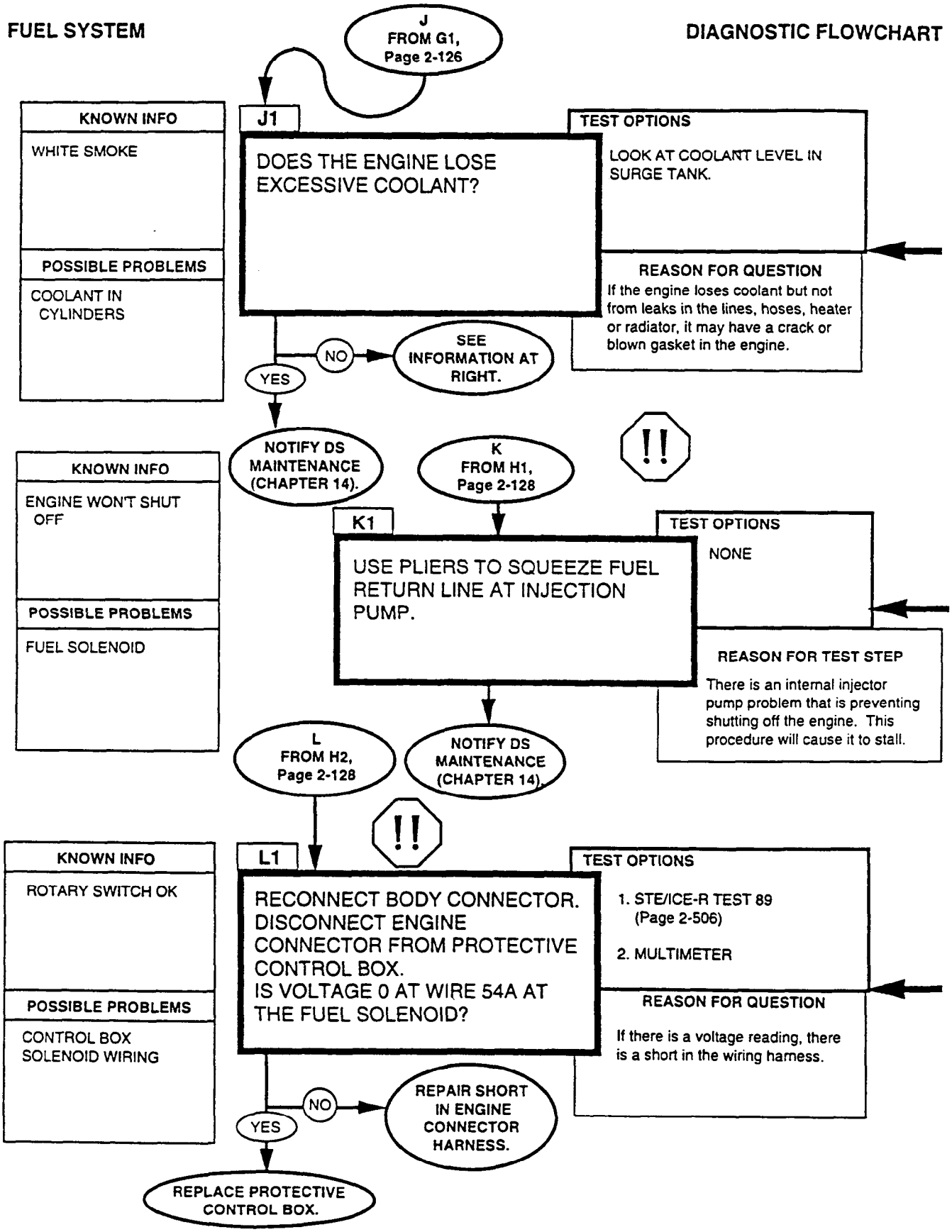

If you are getting white smoke due to coolant entering the cylinders, you should notice a loss of coolant in the radiator or bubbles in the radiator tank while the engine is running. You may need to fill the radiator to proper level and recheck a day later to determine if there is a coolant loss.

If you don't detect coolant loss, you may have missed a fuel problem. Rerun the fuel system tests paying attention for a raw exhaust smell.

If you still find nothing, you may have a small or inconsistant leak. Notify DS maintenance (chapter 14).

WARNING

Keep hands away from engine fan. Moving fan blades can cause serious injury. Use extreme caution when engine is running.

If the engine doesn't shut off with the solenoid disconnected, fuel is still reaching the cylinders–probably because the fuel solenoid is stuck open. When you squeeze the return line tight enough to prevent fuel flowing through it, you create a pressure imbalance inside the injection pump that will cause the engine to stall.

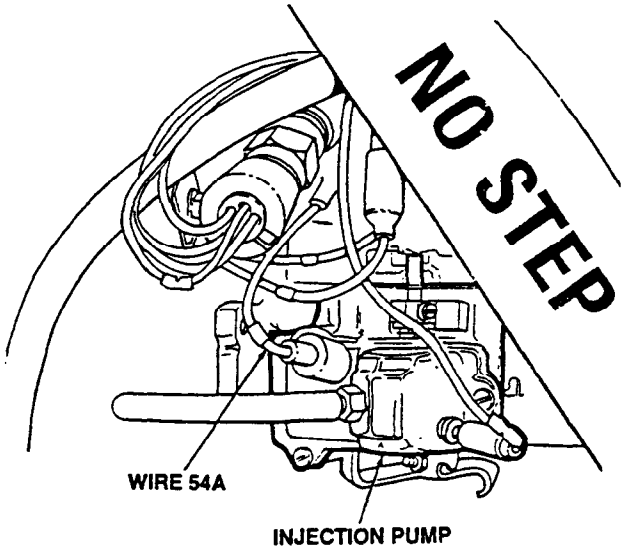

WARNING

Disconnect negative battery cable before disconnecting and reconnecting protective control box harness.

WARNING

There is battery voltage at the PCB at all times. Failure to disconnect battery cable will result in damage to equipment or injury to personnel.

Remember to reconnect any wires that may have been disconnected during troubleshooting.

Repair/replace harness (para. 4-80).

Replace PCB (para. 4-4).

DC VOLTAGE 0-45 VOLTS STE/ICE-R TEST 89
1. Connect RED clip to the indicated test point, BLACK clip to negative or ground. 2. Start Test 89, DC Volts. 3. Displayed reading is in volts.

BATTERY VOLTAGE MULTIMETER
1. Set the voltmeter to a DC volts scale of at least 40 volts. 2. Connect the RED lead to positive and the BLACK lead to negative. 3. Be sure to read the correct scale.

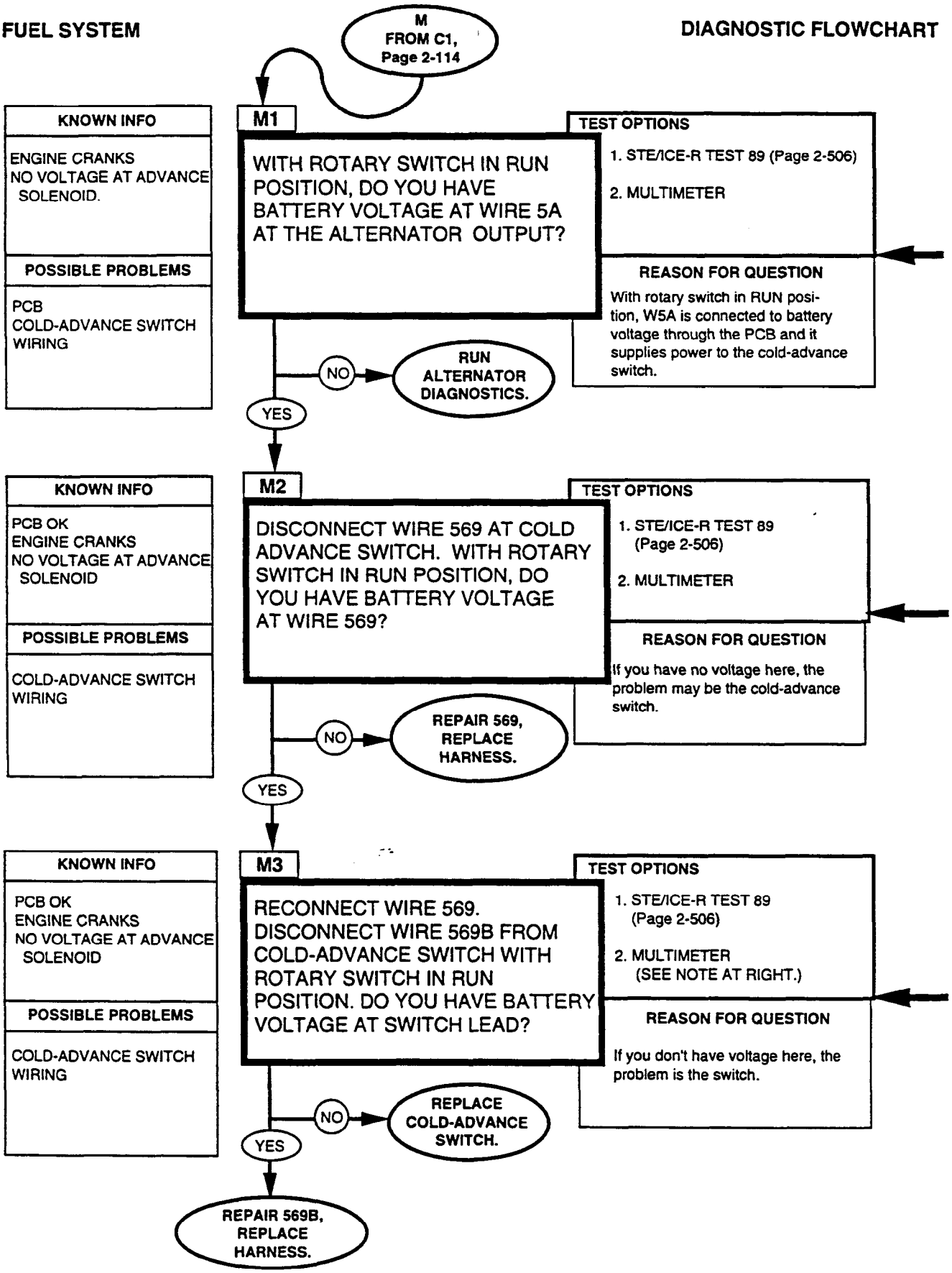
M
FROM C1,
Page 2-114
M1
KNOWN INFO
ENGINE CRANKS
NO VOLTAGE AT ADVANCE SOLENOID.
POSSIBLE PROBLEMS
PCB
COLD-ADVANCE SWITCH WIRING
WITH ROTARY SWITCH IN RUN POSITION, DO YOU HAVE BATTERY VOLTAGE AT WIRE 5A AT THE ALTERNATOR OUTPUT?
TEST OPTIONS
1. STE/ICE-R TEST 89 (Page 2-506)
2. MULTIMETER
REASON FOR QUESTION
With rotary switch in RUN position, W5A is connected to battery voltage through the PCB and it supplies power to the cold-advance switch.
NO
RUN ALTERNATOR DIAGNOSTICS.
YES
M2
KNOWN INFO
PCB OK
ENGINE CRANKS
NO VOLTAGE AT ADVANCE SOLENOID
POSSIBLE PROBLEMS
COLD-ADVANCE SWITCH WIRING
DISCONNECT WIRE 569 AT COLD ADVANCE SWITCH. WITH ROTARY SWITCH IN RUN POSITION, DO YOU HAVE BATTERY VOLTAGE AT WIRE 569?
TEST OPTIONS
1. STE/ICE-R TEST 89 (Page 2-506)
2. MULTIMETER
REASON FOR QUESTION
If you have no voltage here, the problem may be the cold-advance switch.
NO
REPAIR 569, REPLACE HARNESS.
YES
M3
KNOWN INFO
PCB OK
ENGINE CRANKS
NO VOLTAGE AT ADVANCE SOLENOID
POSSIBLE PROBLEMS
COLD-ADVANCE SWITCH WIRING
RECONNECT WIRE 569. DISCONNECT WIRE 569B FROM COLD-ADVANCE SWITCH WITH ROTARY SWITCH IN RUN POSITION. DO YOU HAVE BATTERY VOLTAGE AT SWITCH LEAD?
TEST OPTIONS
1. STE/ICE-R TEST 89 (Page 2-506)
2. MULTIMETER (SEE NOTE AT RIGHT.)
REASON FOR QUESTION
If you don't have voltage here, the problem is the switch.
NO
REPLACE COLD-ADVANCE SWITCH.
YES
REPAIR 569B, REPLACE HARNESS.

REFERENCE INFORMATION

DC VOLTAGE 0-45 VOLTS
STE/ICE-R TEST 89

1. Connect RED clip to positive, BLACK clip to negative or ground.
2. Start Test 89, DC volts.
3. Displayed reading is in volts.

You should only run the engine long enough to determine the gauge reading because engine temperature must stay below 90° F (33° C) for the cold-advance circuit to function.

BATTERY VOLTAGE
MULTIMETER

1. Set the voltmeter to a DC volts scale of at least 40 volts.
2. Connect the RED lead to positive and the BLACK lead to negative.
3. Be sure to read the correct scale.

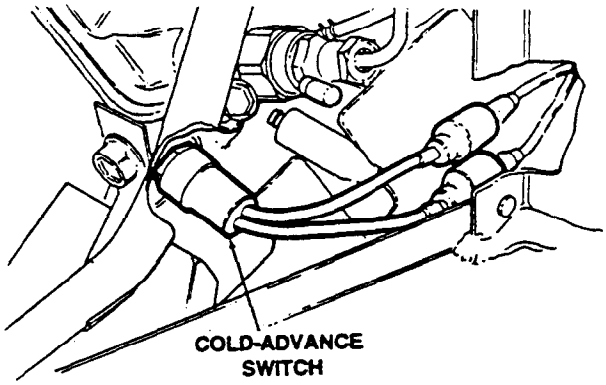

1. Shut off engine.
2. Disconnect wire 569 at cold-advance switch.
3. Turn rotary switch to RUN position.
4. Check for battery voltage at wire 569.

Repair/replace harness (para. 4-80).

COLD-ADVANCE CIRCUIT

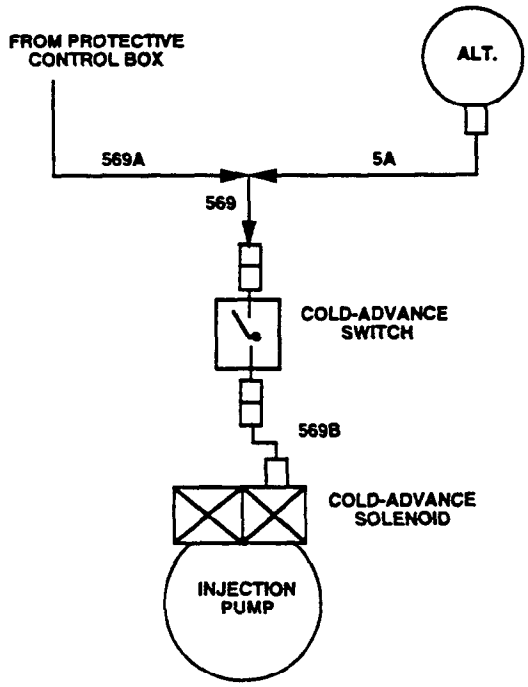

Alternator output is hot when the rotary switch is in the RUN position.

Cold-advance switch is closed when engine temperature is below 90°F (33°C) and open when it goes above 120°F (49°C).

The cold-advance solenoid advances the injection pump timing when it receives power from the switch. This helps the engine run better when it is cold.

NOTE

Engine temperature must be less than 90°F (33° C) when testing the switch.

Replace cold-adavance switch (para. 4-31).

Repair/replace harness (para. 4-80).

FUEL SYSTEM

DIAGNOSTIC FLOWCHART

N
FROM B1,
Page 2-110

!!

N1

KNOWN INFO

NO VOLTAGE AT FUEL SOLENOID

POSSIBLE PROBLEMS

PCB
ROTARY SWITCH
WIRING

DISCONNECT ENGINE CONNECTOR HARNESS FROM THE PCB.

DO YOU HAVE CONTINUITY FROM SOCKET A IN THE CONNECTOR HARNESS TO WIRE 54A LOCATED AT THE FUEL SOLENOID?

TEST OPTIONS

1. STE/ICE-R TEST 91(Page 2-508)
2. MULTIMETER

REASON FOR QUESTION

If you have continuity here, the problem may be the PCB.

NO → REPAIR 54A, 569, OR REPLACE HARNESS.

YES

!!

N2

KNOWN INFO

WIRING TO FUEL SOLENOID OK

POSSIBLE PROBLEMS

PCB
ROTARY SWITCH
WIRING

DISCONNECT THE BODY CONNECTOR FROM THE PCB. WITH THE ROTARY SWITCH IN THE RUN POSITION, DO YOU HAVE AN OPEN CIRCUIT BETWEEN SOCKET B AND SOCKET G IN THE CONNECTOR HARNESS?

TEST OPTIONS

1. STE/ICE-R TEST 91 (Page 2-508)
2. MULTIMETER

REASON FOR QUESTION

If you have continuity, you may have a problem with the rotary switch or the wiring.

NO → GO TO N6, Page 2-138

YES

N3

KNOWN INFO

WIRING TO FUEL SOLENOID OK

POSSIBLE PROBLEMS

PCB
ROTARY SWITCH
WIRING

DISCONNECT WIRE 29A AT THE ROTARY SWITCH.
DO YOU HAVE CONTINUITY BETWEEN WIRE 29A AT THE ROTARY SWITCH AND SOCKET B IN THE BODY CONNECTOR HARNESS?

TEST OPTIONS

1. STE/ICE-R TEST 91 (Page 2-508)
2. MULTIMETER

REASON FOR QUESTION

You need to find the open circuit between the PCB and rotary switch.

NO → REPAIR 29A OR REPLACE HARNESS.

YES → GO TO N4, Page 2-138

REFERENCE INFORMATION

WARNING

Disconnect negative battery cable before disconnecting and reconnecting PCB harness.

WARNING

There is battery voltage at the PCB at all times. Failure to disconnect battery cable will result in damage to equipment or injury to personnel.

Repair wiring (para. 4-80).

Inspect wiring to be sure that all the wires are connected in their proper places.

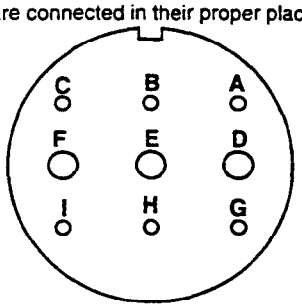

PCB ENGINE CONNECTOR (ON LEFT FENDER LINER)

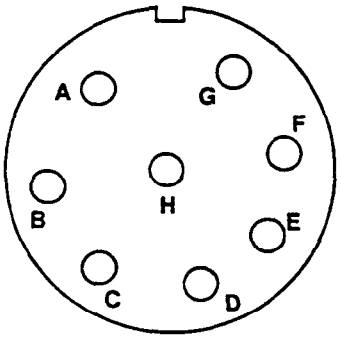

PCB BODY CONNECTOR (LOCATED UNDER DASHBOARD)

Repair wiring (para. 4-80).

Remember to reconnect any wires that were disconnected during troubleshooting.

FUEL SYSTEM

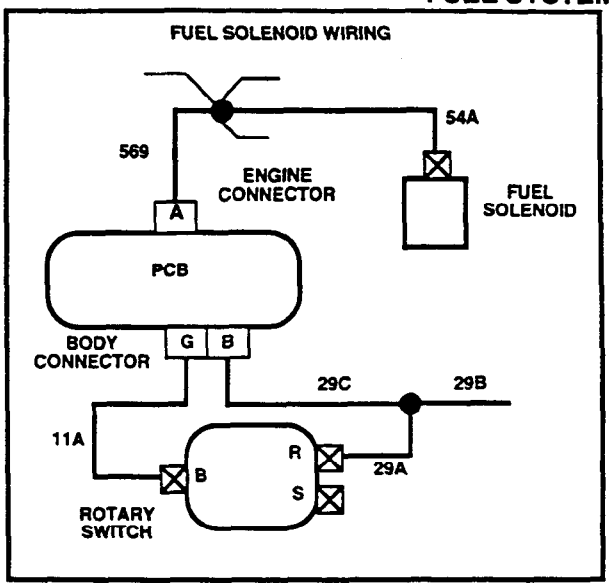

RESISTANCE AND CONTINUITY 0-4,500 OHMS STE/ICE-R TEST 91

1. Connect RED clip and BLACK clip to the terminations indicated in the question. RED to the first, BLACK to the second.
2. Start Test 91, 0-4,500 Ohms.
3. Displayed reading is in ohms. Less than 5 ohms is continuity. If the resistance is over 4,500 ohms, STE/ICE-R displays .9.9.9.9.

CONTINUITY (RESISTANCE) MULTIMETER

1. Set the voltmeter to an ohms scale of about 1,000 ohms.
2. Connect the RED and BLACK leads to the connections stated in the question.
3. Be sure to read the correct scale. Less than 5 ohms indicates continuity. For an open circuit, the meter should peg full scale (needle all the way to the left).

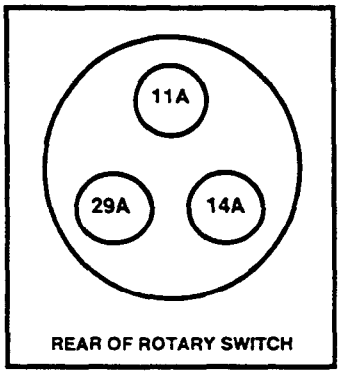

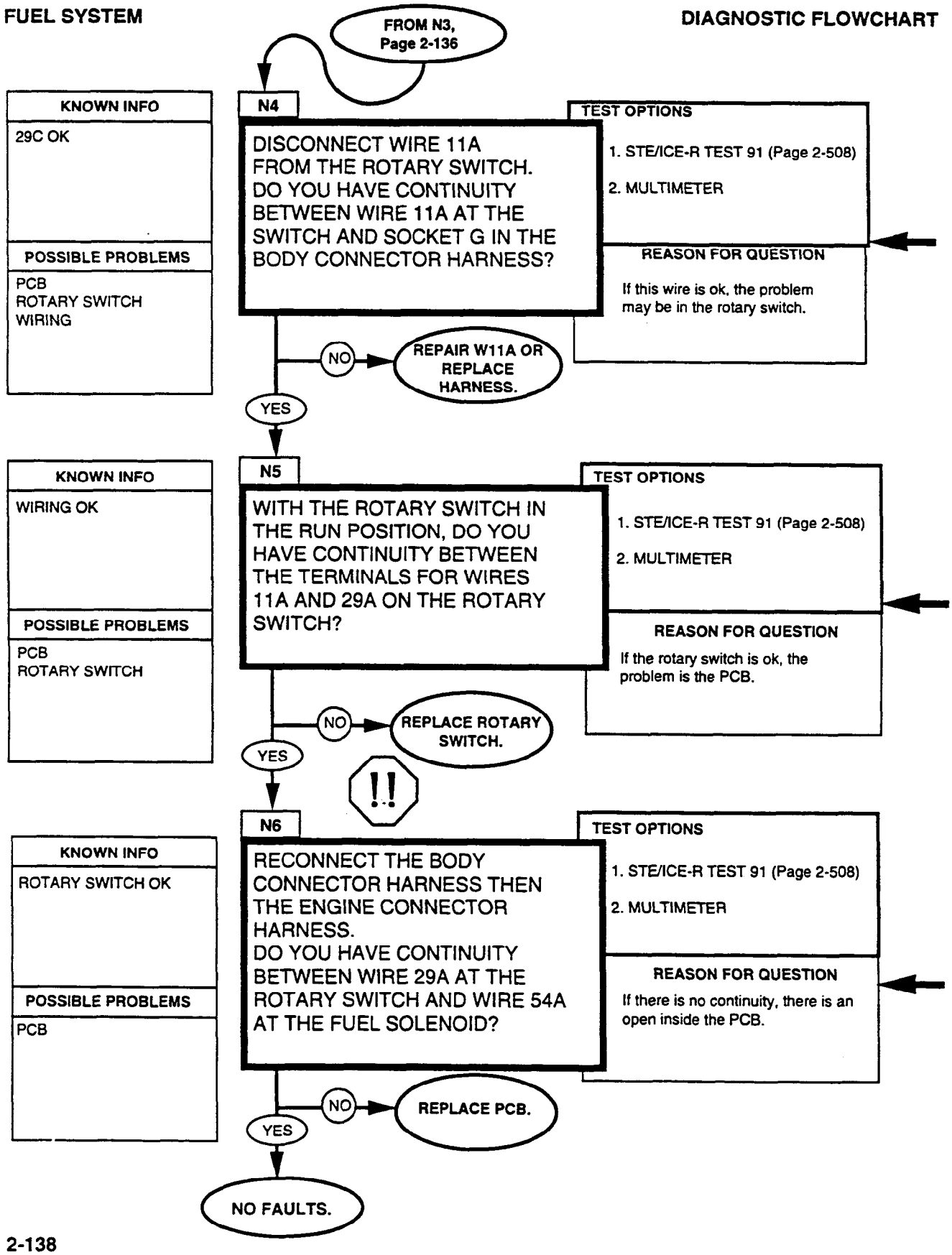
FROM N3, Page 2-136
KNOWN INFO
29C OK
POSSIBLE PROBLEMS
PCB
ROTARY SWITCH
WIRING
N4
DISCONNECT WIRE 11A FROM THE ROTARY SWITCH. DO YOU HAVE CONTINUITY BETWEEN WIRE 11A AT THE SWITCH AND SOCKET G IN THE BODY CONNECTOR HARNESS?
TEST OPTIONS
1. STE/ICE-R TEST 91 (Page 2-508)
2. MULTIMETER
REASON FOR QUESTION
If this wire is ok, the problem may be in the rotary switch.
NO
REPAIR W11A OR REPLACE HARNESS.
YES
KNOWN INFO
WIRING OK
POSSIBLE PROBLEMS
PCB
ROTARY SWITCH
N5
WITH THE ROTARY SWITCH IN THE RUN POSITION, DO YOU HAVE CONTINUITY BETWEEN THE TERMINALS FOR WIRES 11A AND 29A ON THE ROTARY SWITCH?
TEST OPTIONS
1. STE/ICE-R TEST 91 (Page 2-508)
2. MULTIMETER
REASON FOR QUESTION
If the rotary switch is ok, the problem is the PCB.
NO
REPLACE ROTARY SWITCH.
YES
!!
KNOWN INFO
ROTARY SWITCH OK
POSSIBLE PROBLEMS
PCB
N6
RECONNECT THE BODY CONNECTOR HARNESS THEN THE ENGINE CONNECTOR HARNESS.
DO YOU HAVE CONTINUITY BETWEEN WIRE 29A AT THE ROTARY SWITCH AND WIRE 54A AT THE FUEL SOLENOID?
TEST OPTIONS
1. STE/ICE-R TEST 91 (Page 2-508)
2. MULTIMETER
REASON FOR QUESTION
If there is no continuity, there is an open inside the PCB.
NO
REPLACE PCB.
YES
NO FAULTS.

REFERENCE INFORMATION

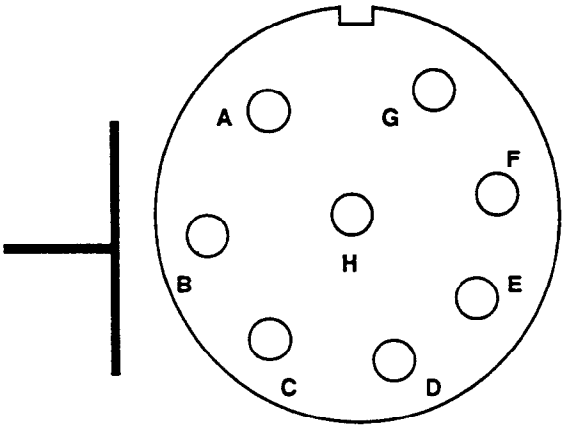

PCB BODY CONNECTOR

Repair/replace harness (para. 4-80).

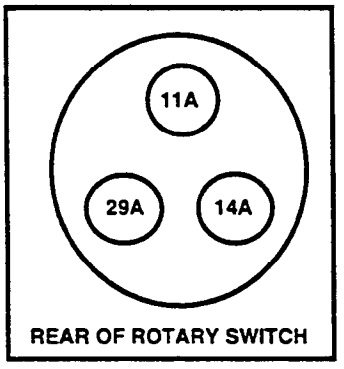

Repair/replace rotary switch (para. 4-10).

WARNING

Disconnect negative battery cable before disconnecting and reconnecting PCB harness.

WARNING

There is battery voltage at the PCB at all times. Failure to disconnect battery cable will result in damage to equipment or injury to personnel.

Be sure to reconnect the wires at the rotary switch and the fuel solenoid.

Replace PCB (para. 4-4).

FUEL SYSTEM

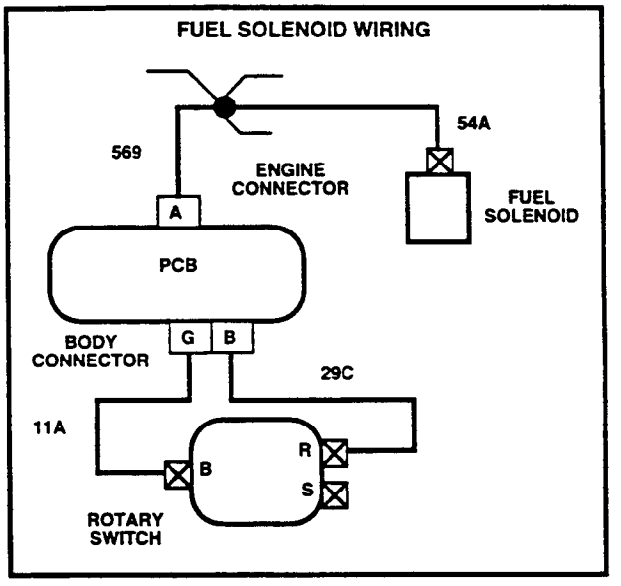

RESISTANCE AND CONTINUITY
0-4500 OHMS
STE/ICE-R TEST 91

1. Connect RED clip and BLACK clip to the terminations indicated in the question.
2. Start Test 91, 0-4,500 Ohms.
3. Displayed reading is in ohms. Less than 5 ohms is continuity. If the resistance is over 4,500 ohms, STE/ICE-R displays .9.9.9.9.

CONTINUITY (RESISTANCE)
MULTIMETER

1. Set the voltmeter to an ohms scale of about 1,000 ohms.
2. Connect the RED and BLACK leads to the connections stated in the question.
3. Be sure to read the correct scale. Less than 5 ohms indicates continuity. For an open circuit, the meter should peg full scale (needle all the way to the left).

2-29. AIR INTAKE/EXHAUST TESTS

These air intake/exhaust system tests can be run any time you think there may be a problem with the air intake or exhaust systems, or if you were sent here from another test.

At the bottom of this page is a simplified block diagram of the intake air/exhaust system. A detailed functional flow is not applicable to this system.

The air intake/exhaust system is a very simple system that can cause very annoying problems. Whether the vehicle is hard to start or runs rough or never develops full power, it's worth the few minutes that it takes to check the components of this system. You can run through the diagnostic logic for this system almost any time you open the hood or check the underside of your vehicle.

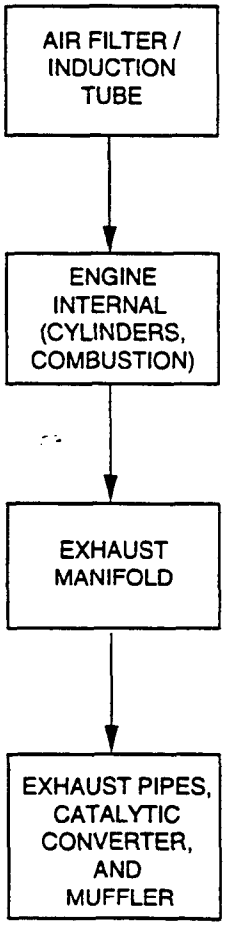

INTAKE AIR/ EXHAUST

DIAGNOSTIC FLOWCHART

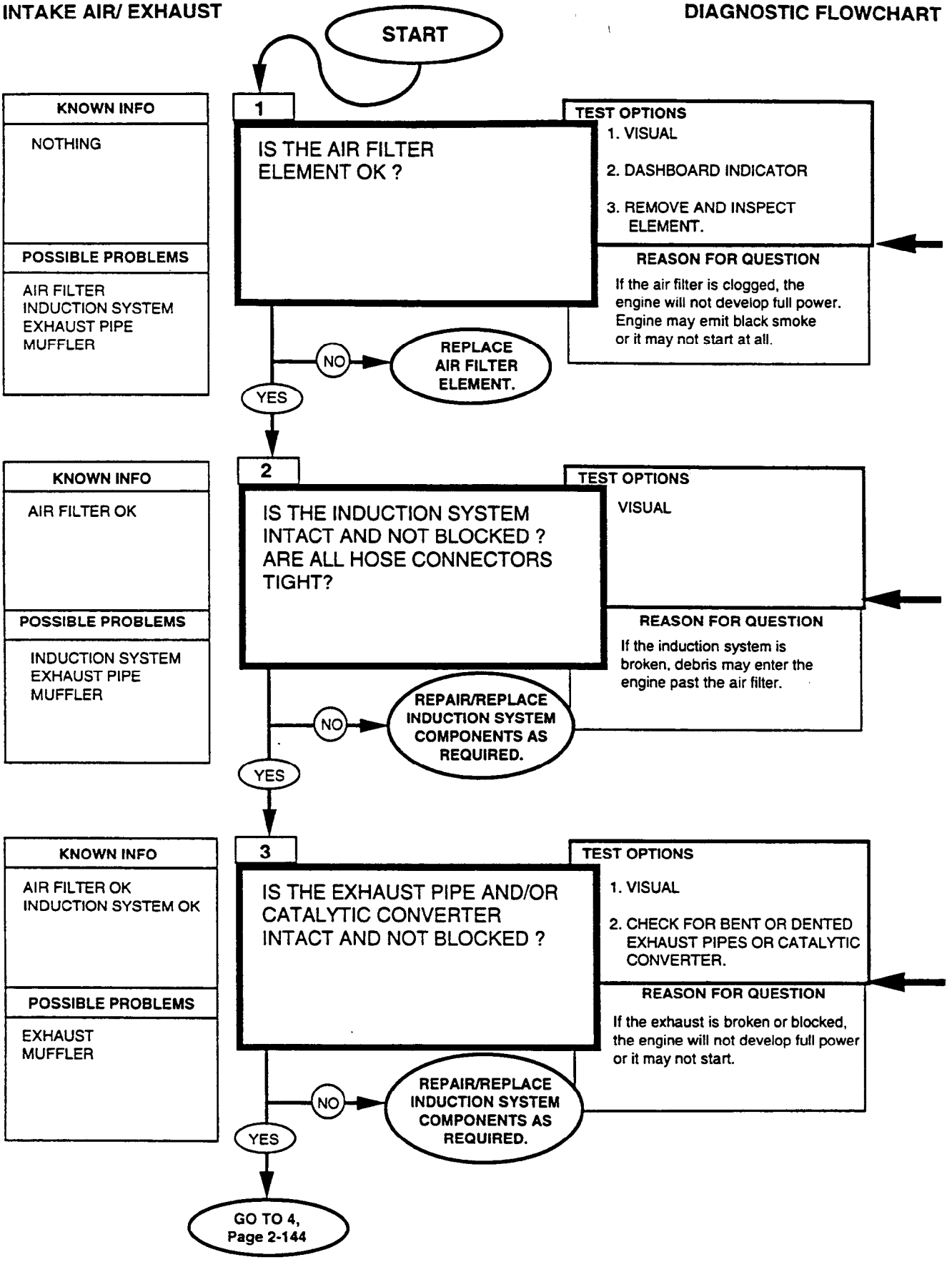

REFERENCE INFORMATION

INTAKE AIR/ EXHAUST

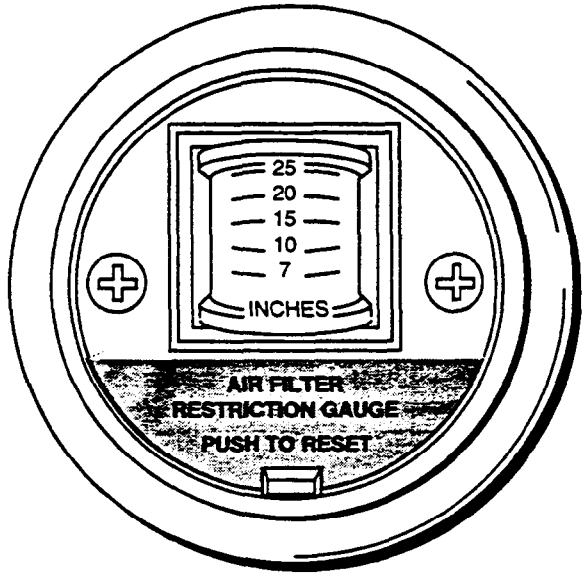

First, check the air filter restriction gauge on the dashboard, just to the left of the steering wheel, and make a note of its reading. Open the air cleaner cannister, remove the air cleaner element and inspect it for dirt and other contaminants. Replace air filter (para. 3-13). A clean air filter is white. If the condition of the filter does not agree with the gauge on the dashboard, make a note to check the gauge. See Instruments tests, page 2-305.

Make sure that all mounting bolts are in place and tight. Look for obvious things like a crushed or cracked air filter or air induction tube and check gaskets where possible. Replace induction system components (para. 3-12).

Look for damage caused by rocks such as bent pipes or holes and loose or broken clamps.

Small dents (depth less than 1/4 the diameter of the exhaust pipes) should not cause the pipes to be replaced as long as the pipes are intact.

Replace induction system components (para. 3-12).

INTAKE AIR/ EXHAUST

DIAGNOSTIC FLOWCHART

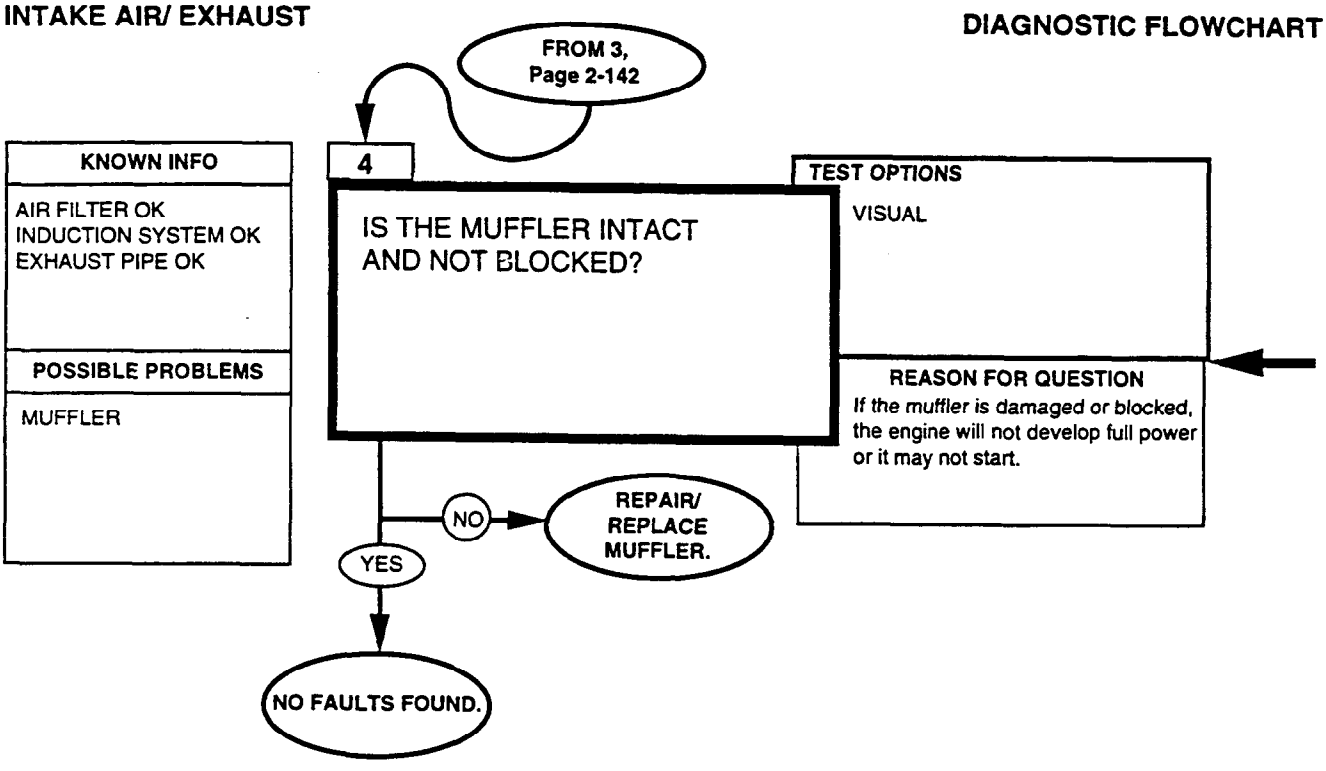

Look for damage caused by rocks such as bent pipes or holes, loose or broken clamps.

Replace muffler (para. 3-49).

2-30. COMPRESSION/MECHANICAL TESTS

The main intent of this paragraph is to determine if the engine has internal compression or mechanical problems and to fix everything possible without having to notify DS maintenance (chapter 14).

COMPRESSION / MECHANICAL — DIAGNOSTIC FLOWCHART

START

1

KNOWN INFO

NOTHING

POSSIBLE PROBLEMS

ENGINE
FUEL SYSTEM
INTAKE/EXHAUST
BATTERY CIRCUIT
STARTER CIRCUIT
LUBRICATION

DOES THE ENGINE CRANK AT NORMAL SPEED?

TEST OPTIONS

STE/ICE-R TEST 10 (Page 2-490)

REASON FOR QUESTION

No cranking or slow cranking may indicate a seized or tight engine, weak batteries or a bad starter circuit.

NO → GO TO A, page 2-152

YES ↓

2

KNOWN INFO

BATTERY CIRCUIT OK
STARTER CIRCUIT OK
ENGINE NOT SEIZED

POSSIBLE PROBLEMS

FUEL SYSTEM
ENGINE
INTAKE/EXHAUST

DOES THE VEHICLE START ?

TEST OPTIONS

FOLLOW NORMAL STARTING PROCEDURE.

REASON FOR QUESTION

If the engine starts, then most of the fuel system is ok and the intake/exhaust system is probably ok.

NO → GO TO STARTABILITY, Page 2-45

YES ↓

3

KNOWN INFO

BATTERY CIRCUIT OK
STARTER CIRCUIT OK
ENGINE NOT SEIZED
AIR AND FUEL TO CYLINDERS

POSSIBLE PROBLEMS

LUBRICATION
ENGINE
FUEL SYSTEM
INTAKE/EXHAUST

IS THE ENGINE OIL PRESSURE 40-45 PSI (276-310 kPa) AT 2,000 RPM AND THE ENGINE WARM ?

TEST OPTIONS

1. OIL PRESSURE GAUGE
2. STE/ICE-R TEST 50 (Page 2-495)

REASON FOR QUESTION

Without proper oil pressure, the engine won't be lubricated properly.

NO → GO TO LUBRICATION, Page 2-69

YES ↓

GO TO 4, Page 2-150

REFERENCE INFORMATION

A healthy engine should crank at least 100 rpm when it's cold and at least 180-200 rpm when it's warm.

If the engine doesn't crank at normal speed, it could be due to a starter or battery circuit fault or it may be due to an internal engine problem.

Oil pressure may go as high as 80 psi (552 kPa) if the engine is cold and should be 10 psi minimum at idle speed. You should check the oil pressure with the STE/ICE-R (test 50) using 1,000 psi (6,895 kPa) transducer (blue stripe). Check pressure at idle and at 2,000 rpm. If pressure is low, check oil level and condition. Add or change oil as required.

COMPRESSION / MECHANICAL

ENGINE RPM
STE/ICE-R TEST 10

1. Start Test 10, Engine RPM.
2. Crank or start the engine. Displayed reading is RPM. Cranking rpm should be approximately 100-200. Idle rpm should be 625 - 675.

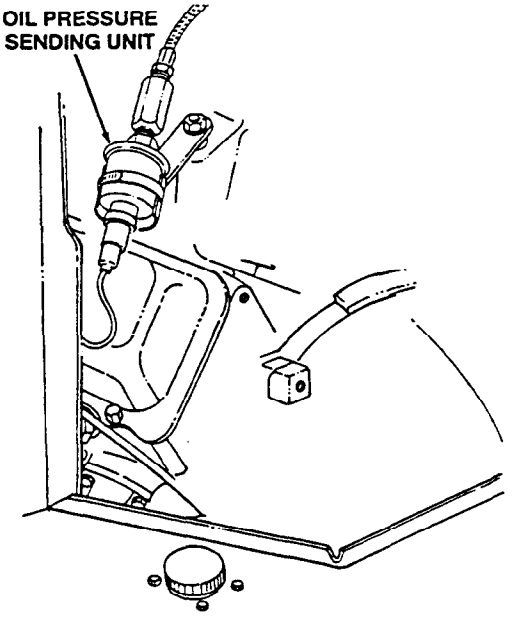

OIL PRESSURE
STE/ICE-R TEST 50

1. Install STE/ICE-R 0 to1000 PSI (0-6,895 kPa) transducer (blue stripe) in place of oil pressure sending unit.
2. Connect to STE/ICE-R TK connector J2 or J3.
3. CAL with engine off.
4. Start engine. Run test 50. With the engine warm, oil pressure should be 10 psi (69 kPa) minimum at idle and 40-45 psi (275-310 kPa) at 2,000 rpm. Pressure may go as high as 80 psi (552 kPa) when the engine is cold.

COMPRESSION / MECHANICAL

DIAGNOSTIC FLOWCHART

FROM 3, Page 2-148

4

KNOWN INFO

BATTERY CIRCUIT OK
STARTER CIRCUIT OK
ENGINE NOT SEIZED
AIR AND FUEL TO CYLINDERS

POSSIBLE PROBLEMS

INTAKE/EXHAUST
FUEL SYSTEM
ENGINE

DOES THE ENGINE SOUND NORMAL AND HAVE NORMAL VIBRATIONS AT ALL SPEEDS?

TEST OPTIONS

REV THE ENGINE. DRIVE THE VEHICLE.

REASON FOR QUESTION

The first indication of a mechanical problem is an abnormal noise or vibration. Before running other tests to check for engine problems, this is to try to make sure that you don't make a bad problem worse.

NO → GO TO B, Page 2-154

YES ↓

5

KNOWN INFO

BATTERY CIRCUIT OK
STARTER CIRCUIT OK
ENGINE NOT SEIZED
AIR AND FUEL TO CYLINDERS
FUEL SYSTEM OK
INTAKE/EXHAUST OK

POSSIBLE PROBLEMS

ENGINE

DOES THE ENGINE PASS THE COMPRESSION UNBALANCE TEST?

TEST OPTIONS

STE/ICE-R TEST 14 (Page 2-493)

REASON FOR QUESTION

If the engine fails the cylinder unbalance test, it indicates an individual cylinder problem such as a bad fuel injector, excessive blowby, etc.

NO → RUN THE TRANSMISSION AND STEERING TESTS. IF NO FAULTS FOUND, NOTIFY DS (CHAPTER 14).

YES ↓

6

KNOWN INFO

BATTERY CIRCUIT OK
STARTER CIRCUIT OK
ENGINE NOT SEIZED
AIR AND FUEL TO CYLINDERS

POSSIBLE PROBLEMS

ENGINE
FUEL SYSTEM
INTAKE/EXHAUST

DOES THE ENGINE PASS THE POWER TEST?

TEST OPTIONS

STE/ICE-R TEST 13 (Page 2-492)

REASON FOR QUESTION

Loss of power can be caused by internal engine problems, fuel system, air intake/exhaust, or drivetrain problems.

NO → GO TO C, PAGE 2-156

YES ↓

NO FAULTS FOUND. IF YOU WERE SENT HERE FROM ANOTHER TEST, RETURN TO IT.

This is not to evaluate driving performance. If the engine or the vehicle makes strange noises or vibrations at idle speed, don't rev the engine. If there is a problem internal to the engine, revving the engine could cause major damage (like a rod coming through the engine block).

COMPRESSION UNBALANCE STE/ICE-R TEST 14

1. Run tests 72, 73, and 74 to verify that the batteries are ok.
2. Disconnect wire 54A at injection pump to prevent starting.

CAUTION

The glow plug controller and the control valve electrical connector must be disconnected prior to running this test.

3. Disconnect glow plug controller and control valve electrical connector.
4. Start Test 14, Compression Unbalance.
5. Wait for the GO message. Crank the engine.
6. Release the rotary switch when the VTM displays OFF. A number less than 25% is passing.

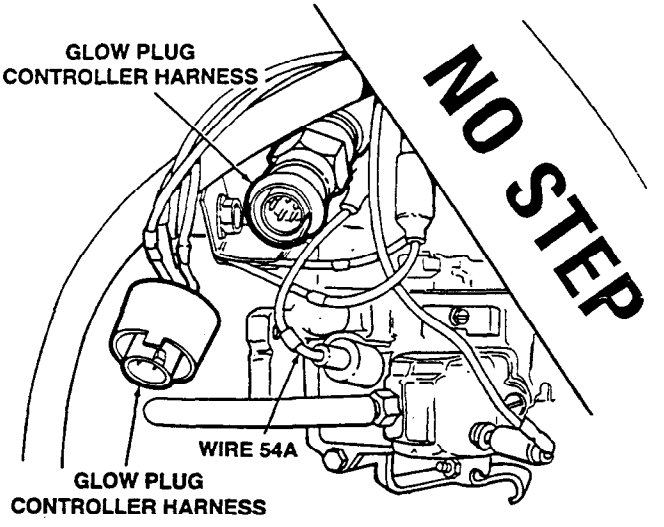

If the vehicle passes the STE/ICE-R Compression Unbalance test, it may still have a compression problem, but it would mean that every cylinder has low compression. This is possible, but not too likely. If you don't find a problem and suspect compression, notify DS maintenance (chapter 14) to measure compression.

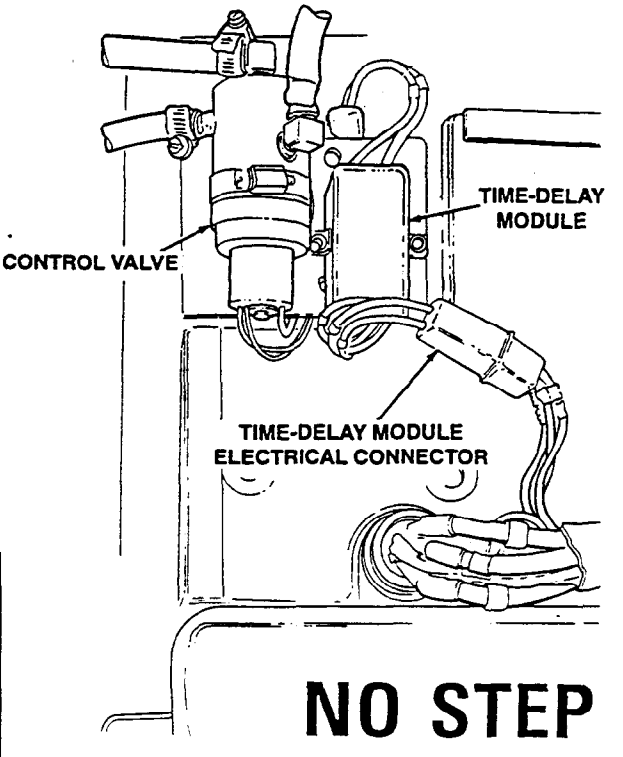

If STE/ICE-R is not available, accelerate under full power to a reasonable speed on a flat, level, paved surface. You have to decide from your own experience whether or not the engine is developing full power. A number greater than 75 is passing for Test 13.

POWER TEST (PERCENT) STE/ICE-R TEST 13

1. Start and idle engine.
2. Run STE/ICE-R test 10 to set idle and governor speed as necessary
3. Start STE/ICE-R test 13
4. When CIP appears on the display, press down sharply on the accelerator and hold it to the floor until the VTM displays OFF.
5. Displayed value is % POWER

COMPRESSION / MECHANICAL — DIAGNOSTIC FLOWCHART

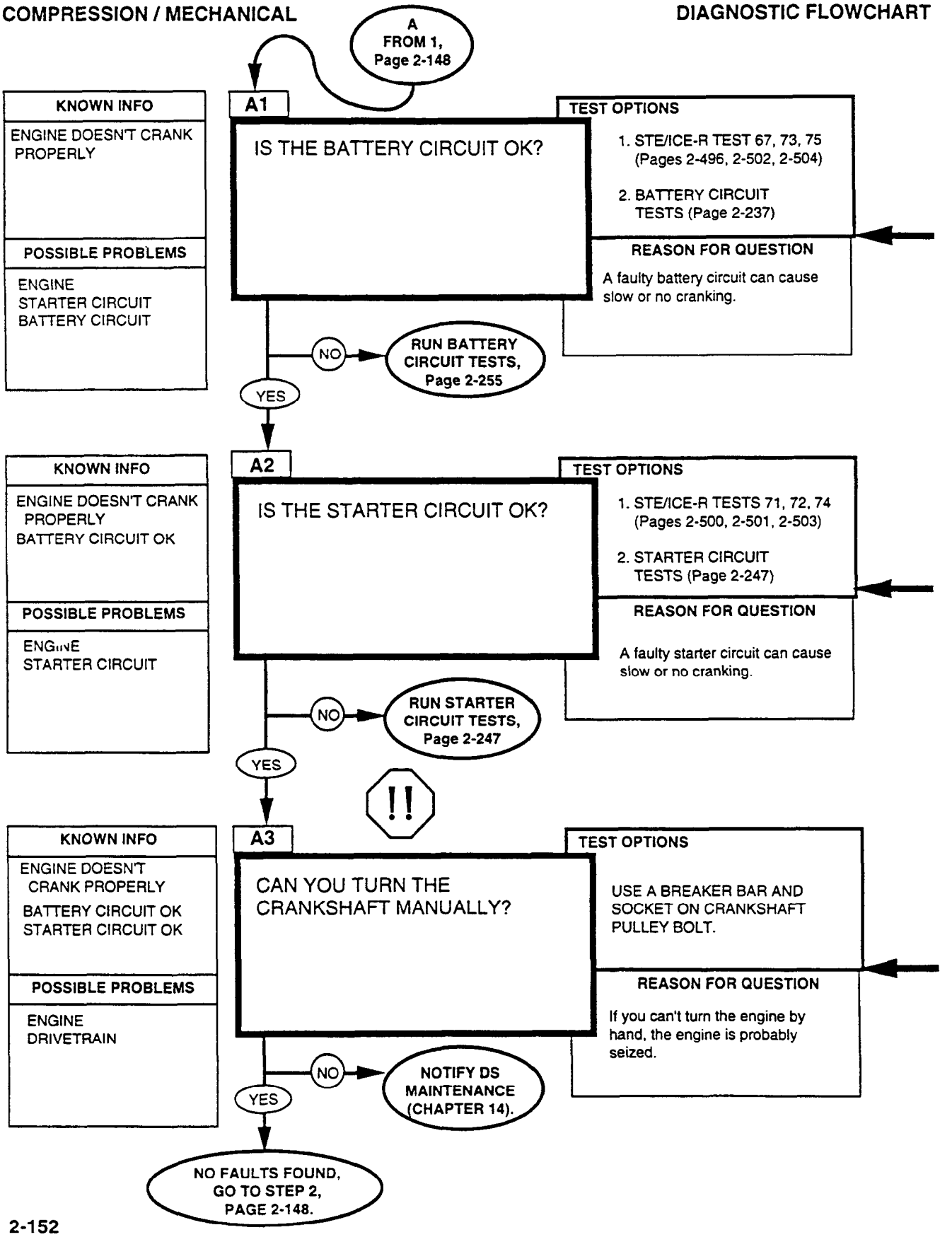

BATTERY VOLTAGE STE/ICE-R TEST 67

1. Start Test 67, Battery Voltage.
2. Displayed reading is in volts. Batteries should be 23-25.5 volts. Batteries voltage will drop when glow plugs turn on.

STARTER AVERAGE CURRENT STE/ICE-R TEST 71

1. Start Test 71, Starter Average Current.
2. Displayed reading is in amps. The starter should draw at least 200 amps with a peak of over 400 amps.

The starter circuit tests begin on page 2-247.

Internal engine problems (tight main or rod bearings for example) or drivetrain problems could still cause the engine to crank slowly even if the starter and battery circuits are OK.

WARNING

Be sure to disconnect fuel solenoid (wire 54A) to prevent accidental starting. Failure to do so may result in injury to personnel or damage to equipment.

A breaker bar and socket placed on the crankshaft pulley can be used to try to turn the crankshaft. The crankshaft pulley is located directly under the engine cooling fan. It can be reached from under the HMMWV.

If the engine won't turn, remove the glow plugs and try again. If the engine turns now, try cranking it and look for fuel at the eight glow plug holes. If you see fuel at any of the holes, the engine may have had hydrostatic lock. Crank the engine for about 15 seconds to clear the fuel, re-install the glow plugs and try to start the engine. If it still won't crank, notify DS maintenance (chapter 14).

STARTER FIRST PEAK CURRENT STE/ICE-R TEST 72

1. Disconnect wire 54A at injection pump to prevent starting.
2. Disconnect glow plugs controller and fan solenoid.
3. Start Test 72, Current First Peak.
4. Wait for the GO message. Crank the engine.
5. Result is displayed in amps. Starter first peak should be over 400 amps.

BATTERY INTERNAL RESISTANCE STE/ICE-R TEST 73

1. Disconnect wire 54A at injection pump to prevent starting.
2. Disconnect glow plugs controller and fan solenoid.
3. Start Test 73, Battery Internal Resistance.
4. Wait for the GO message. Crank the engine.
5. Result is displayed in milliohms. Battery resistance should be 25 milliohms max.

STARTER CIRCUIT RESISTANCE STE/ICE-R TEST 74

1. Disconnect wire 54A at injection pump to prevent starting.
2. Disconnect glow plugs controller and fan solenoid.
3. Start Test 74, Starter Circuit Resistance.
4. Wait for the GO message. Crank the engine.
5. Result is displayed in milliohms. Starter circuit resistance should be 25 milliohms max.

COMPRESSION / MECHANICAL

DIAGNOSTIC FLOWCHART

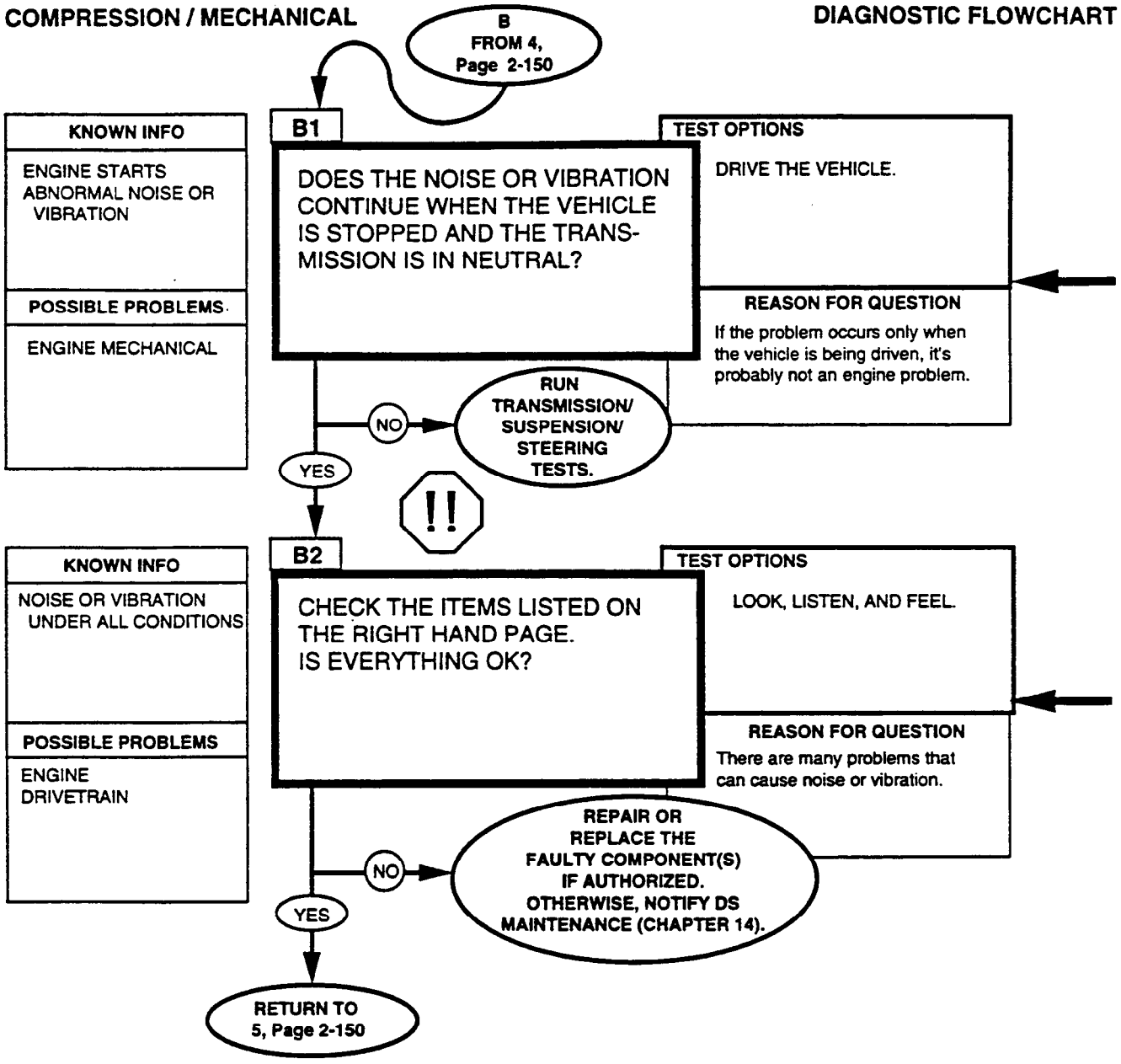

Try the following steps:

1. Determine what noises or vibrations are there when the engine is running with the transmission in neutral.

2. Keep the engine running, put the transmission in drive, and take note of any changes in the noises or vibrations.

3. If it's safe to drive, drive the vehicle and take note of any changes in the noises or vibrations. Drive vehicle through all gears and ranges within speed rates listed in TM 9-2320-387-10.

WARNING

A hot engine may cause serious burns. Always use caution when approaching a hot engine.

Engine Mounts
Transmission Mounts
Cooling Fan
Serpentine Belt
Water Pump
Power Steering Pump
Fuel Pump
Alternator
Air Induction Components
Exhaust Components

COMPRESSION / MECHANICAL — DIAGNOSTIC FLOWCHART

C
FROM 6,
Page 2-150

C1

KNOWN INFO

BATTERY AND STARTER CIRCUITS OK

POSSIBLE PROBLEMS

ENGINE
DRIVETRAIN
FUEL SYSTEM
INTAKE/EXHAUST

RUN A POWER TEST WITH THE AIR FILTER REMOVED. DOES THE TEST STILL FAIL?

TEST OPTIONS

AIR INTAKE/EXHAUST TESTS (Page 2-141)

REASON FOR QUESTION

Intake or exhaust restrictions will prevent the engine from producing full power. A NO answer means the test passed with no air filter.

NO → GO TO AIR INTAKE/ EXHAUST TESTS, Page 2-141

YES ↓

C2

KNOWN INFO

BATTERY AND STARTER CIRCUITS OK
AIR INTAKE/EXHAUST OK

POSSIBLE PROBLEMS

ENGINE
DRIVETRAIN
FUEL SYSTEM

HAVE YOU RUN THE FUEL SYSTEM TESTS YET?

TEST OPTIONS

FUEL SYSTEM TESTS (Page 2-99)

REASON FOR QUESTION

Many fuel system faults will allow the engine to start and run but prevent it from producing full power.

NO → GO TO FUEL SYSTEM TESTS, Page 2-99

YES ↓

C3

KNOWN INFO

BATTERY AND STARTER CIRCUITS OK
AIR INTAKE/EXHAUST OK
FUEL SYSTEM OK

POSSIBLE PROBLEMS

ENGINE
DRIVETRAIN

IF EVERYTHING CHECKS OUT OK TO THIS POINT, THEN YOU PROBABLY HAVE AN ENGINE MECHANICAL PROBLEM THAT CAN'T BE HANDLED AT THIS LEVEL OF MAINTENANCE. NOTIFY DS MAINTENANCE (CHAPTER 14).

If faults are found and corrected, go to STEP 2, page 2-148.

If no faults are found, go to B2, page 2-154.

If faults are found and corrected, go to STEP 2, page 2-148.

If no faults are found, go to B2, page 2-154.

2-31. ENGINE COOLING TESTS

These engine cooling tests may be run any time you think you have an engine cooling problem or if you were sent here by another test chain. Just follow the path, answering the questions. Additional information and notes are given on the facing page when necessary. Please note that this paragraph is NOT for diagnoses of problems with the temperature sending unit or the gauge.

Once you are sure that the cooling system is OK, run the instruments test in paragraph 2-38 to find out if the gauge is OK.

Fold-out FP-7 contains a functional diagram of the engine cooling system. This page may be left open for reference while testing.

The engine cooling system is a pressure-type cooling system with thermostatic control of coolant circulation. The cooling system dissipates heat generated from combustion and maintains the engine operating temperature at its most efficient level. When the engine is cold and the thermostat is closed, coolant is recirculated through the water pump and engine. As the engine coolant reaches 215°F (102°C), the thermostat opens, allowing coolant to flow through the radiator before returning to the water pump and engine. Any air or vapor in the cooling system will be forced to the surge tank under the liquid level and leave through a vent tube. As the system cools, the extra coolant in the tank will be drawn back to the radiator. Normally a 50-50 mixture of water and ethylene glycol-based antifreeze will be used. The fan is activated when coolant temperature reaches approximately 220° F (104°C). A separate oil cooler is mounted in front of the radiator. This cooler is divided into two parts. The top half is for transmission oil. The bottom half is for engine oil. When the cooling system pressure reaches approximately 15 psi (103 kPa), a valve in the surge tank cap opens and lets excess pressure escape to the atmosphere.

ETHYLENE-GLYCOL MIXTURE TABLE

LOWEST EXPECTED AMBIENT TEMPERATURE °F	°C	ETHYLENE-GLYCOL (-60°F, -51°C) INHIBITED (MIL-A-46153) PINTS PER GALLON OF COOLANT CAPACITY	SPECIFIC GRAVITY (68°F) (20°C)	ARCTIC GRADE ANTIFREEZE (-90°F) (-68°C) MIL-A-11755
+20	-7	1-1/2	1.022	Freezing point of -90°F (-68°C). Issued ready-for-use and must not be mixed with any other liquid.
+10	-12	2	1.036	
0	-18	2-3/4	1.047	
-10	-23	3-1/4	1.055	
-20	-29	3-1/2	1.062	
-30	-34	4	1.067	
-40	-40	4-1/4	1.073	
-50	-46	4-1/2		
-55	-48	4-3/4		
BELOW -60	BELOW -51	USE ARCTIC GRADE ANTIFREEZE (-90°F) (-68°C)		

ENGINE COOLING

DIAGNOSTIC FLOWCHART

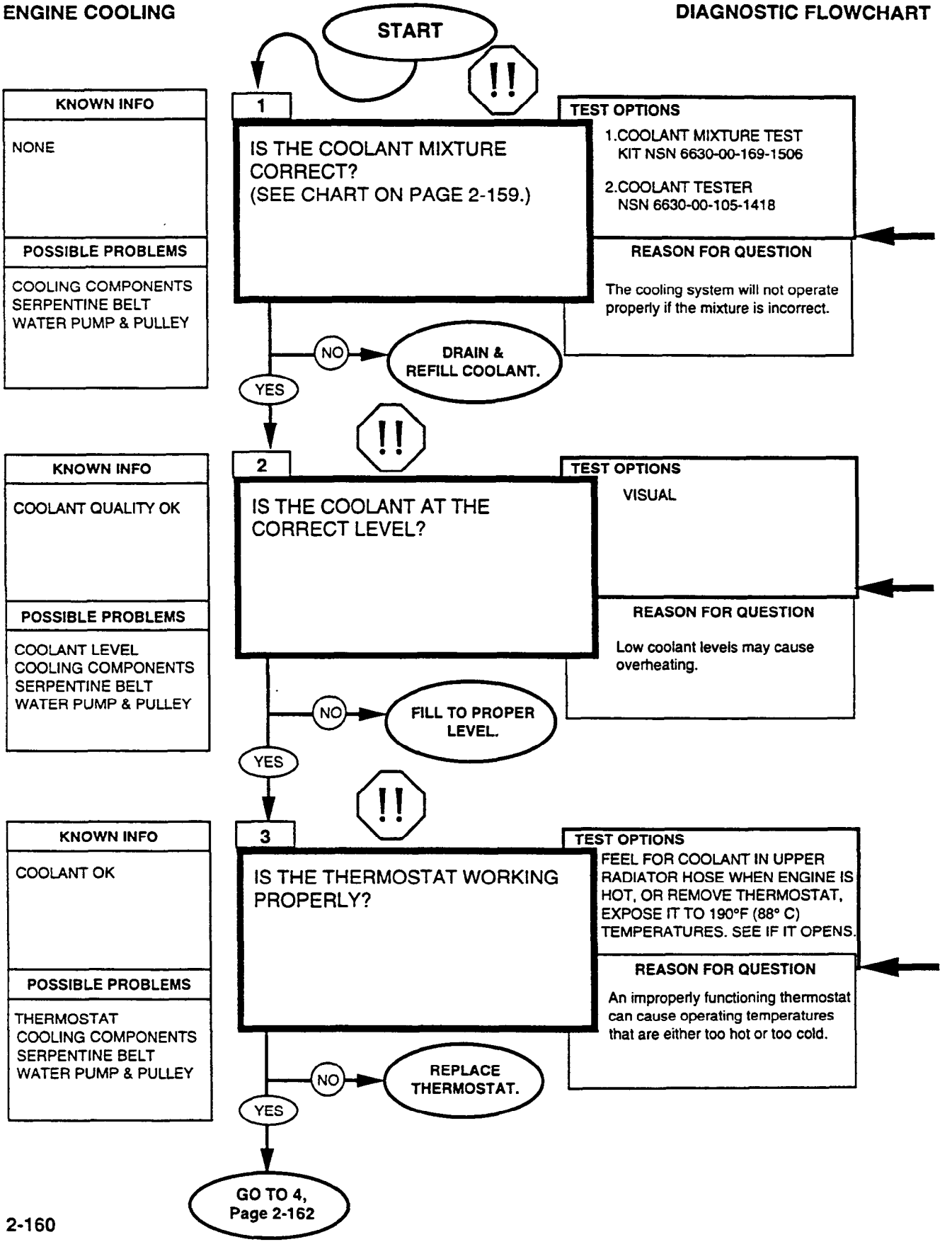

REFERENCE INFORMATION

ENGINE COOLING

WARNING

Do not remove surge tank filler cap before releasing internal pressure when engine temperature is above 190°F (88°C). Steam or hot coolant under pressure will cause injury.

Drain and refill coolant (para. 3-61).

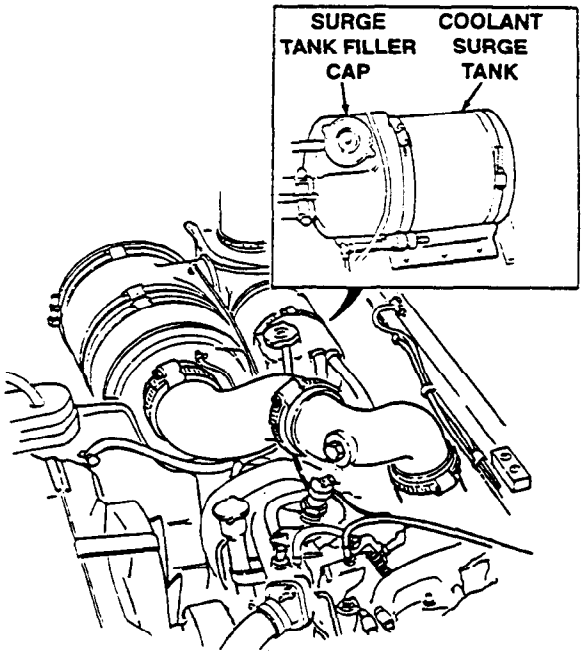

WARNING

Do not remove surge tank filler cap before releasing internal pressure when engine temperature is above 190°F (88°C). Steam or hot coolant under pressure will cause injury.

Fill coolant to proper level (para. 3-61).

WARNING

Always use caution when approaching a hot engine. Failure to do so may result in serious burns.

Remove and replace the thermostat (para. 3-76).

ENGINE COOLING

DIAGNOSTIC FLOWCHART

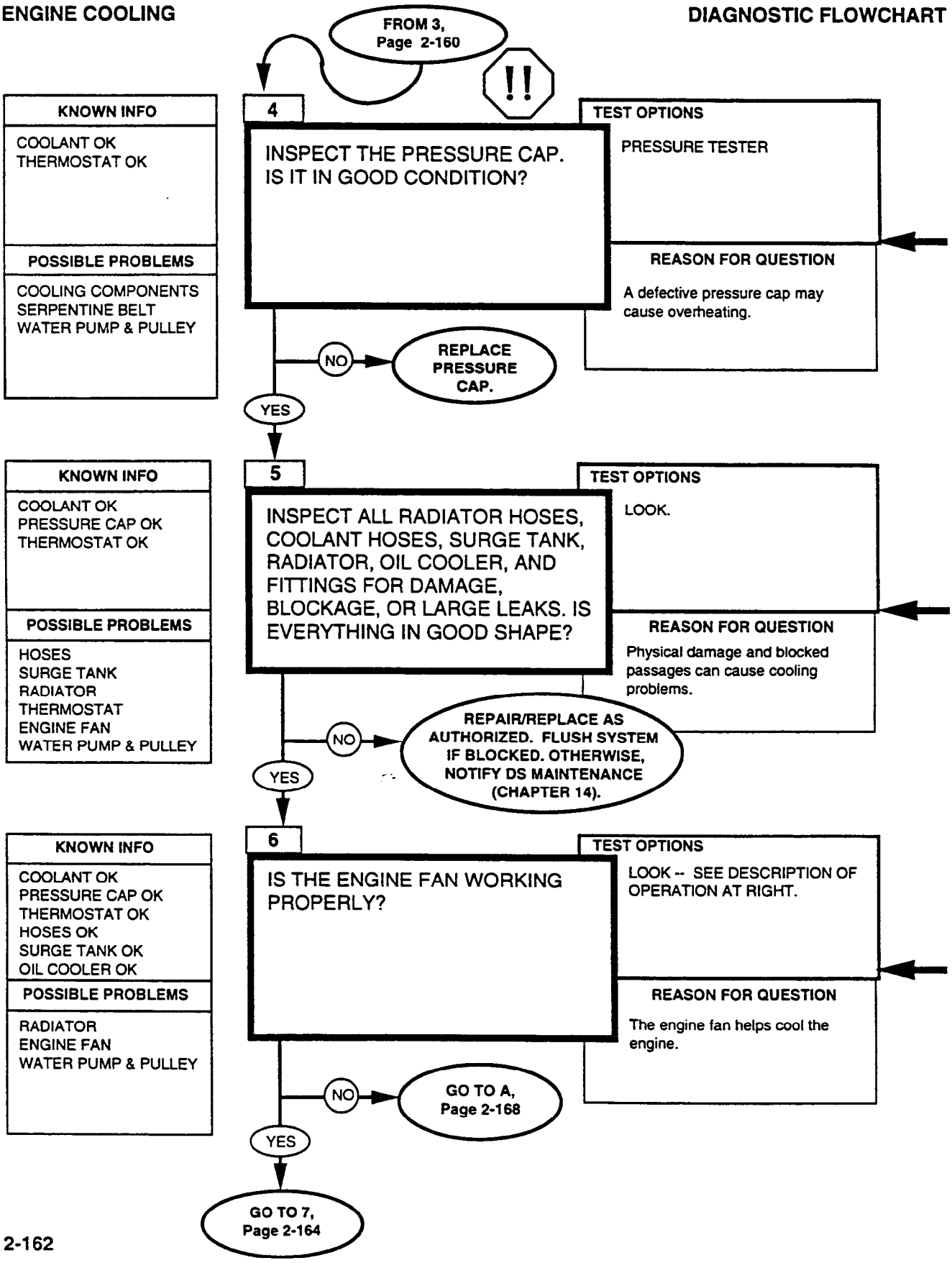

REFERENCE INFORMATION

ENGINE COOLING

WARNING

Do not remove surge tank filler cap before releasing internal pressure when engine temperature is above 190°F (88°C). Steam or hot coolant under pressure will cause injury.

Check seal and spring on pressure cap.

Replace pressure cap (para. 3-61).

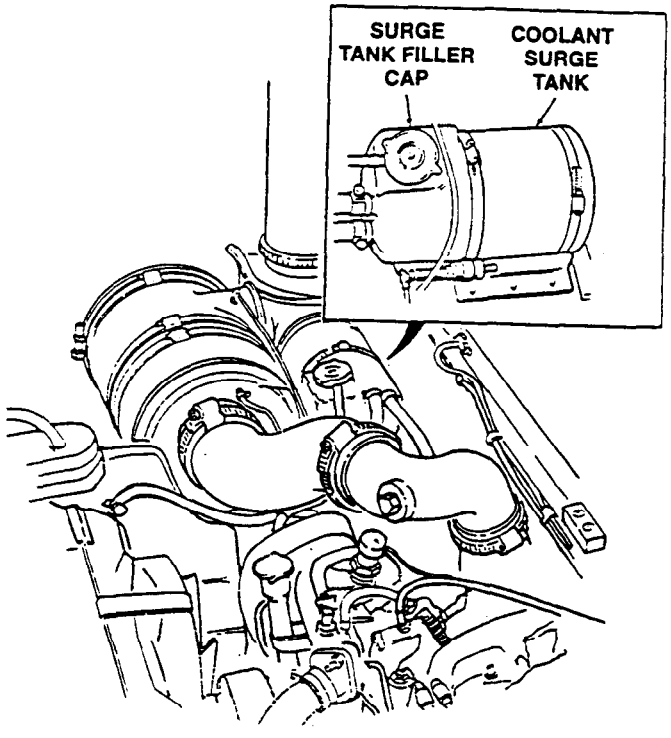

Flush cooling system (para. 3-61).

For surge tank and radiator support replacement procedures, refer to paras. 3-64 and 3-65.

For oil cooler and oil cooler hose replacement procedures, refer to paras. 3-7 and 3-8.

Notify DS maintenance to repair radiator (chapter 17).

ENGINE COOLING FAN DESCRIPTION OF OPERATION

An external line from the power steering gear brings hydraulic fluid to the clutch fan solenoid through control valve (normally open) and then to the fan drive, keeping it disengaged. The action of the valve is controlled by the time-delay module and the fan temperature switch.

During normal operation, the fan timer switch is closed. This keeps the control valve in the open position and the drive disengaged.
As the engine reaches a temperature of about 215°F (102°C), the temperature switch opens and the control valve closes. This engages the fan. If the fan is engaged and the accelerator is floored, the throttle position sensor disengages the fan drive for a period of 20 seconds.

The easiest way to determine if the fan is engaged is to stand outside the driver's door and gently work the accelerator. If the fan is engaged, you will feel a breeze from the engine area. If the fan is not engaged, you won't feel the breeze.

ENGINE COOLING

DIAGNOSTIC FLOWCHART

FROM 6, Page 2-162

7

KNOWN INFO

COOLANT OK
PRESSURE CAP OK
HOSES OK
SURGE TANK OK
OIL COOLER OK
ENGINE FAN OK

POSSIBLE PROBLEMS

RADIATOR
WATER PUMP & PULLEY
SERPENTINE BELT

INSPECT THE RADIATOR. IS IT IN GOOD CONDITION (FINS NOT BADLY BENT OR BLOCKED)?

TEST OPTIONS

LOOK.

REASON FOR QUESTION

Bent or blocked fins prevent efficient cooling of the coolant.

NO → STRAIGHTEN AND CLEAN.

YES ↓

8

KNOWN INFO

COOLANT OK
PRESSURE CAP OK
RADIATOR/HOSES OK
SURGE TANK OK
OIL COOLER OK
ENGINE FAN OK

POSSIBLE PROBLEMS

WATER PUMP & PULLEY
SERPENTINE BELT

INSPECT THE WATER PUMP AND PULLEY. ARE THEY IN GOOD CONDITION?

TEST OPTIONS

LOOK AND LISTEN.

REASON FOR QUESTION

A bad pulley and water pump won't cool the engine efficiently.

NO → REPLACE PULLEY OR PUMP.

YES ↓

9

KNOWN INFO

RADIATOR/HOSES OK
SURGE TANK OK
OIL COOLER OK
ENGINE FAN OK
PUMP & PULLEY OK

POSSIBLE PROBLEMS

SERPENTINE BELT
INTERNAL ENGINE LEAKS

IS THE SERPENTINE BELT IN GOOD CONDITION?

TEST OPTIONS

VISUAL INSPECTION OF BELT TENSIONER POSITION.

REASON FOR QUESTION

If belt tensioner has fully retracted, belt is to be replaced because it will not drive the fan properly.

NO → REPLACE BELT.

YES ↓

GO TO 10, Page 2-166

REFERENCE INFORMATION

ENGINE COOLING

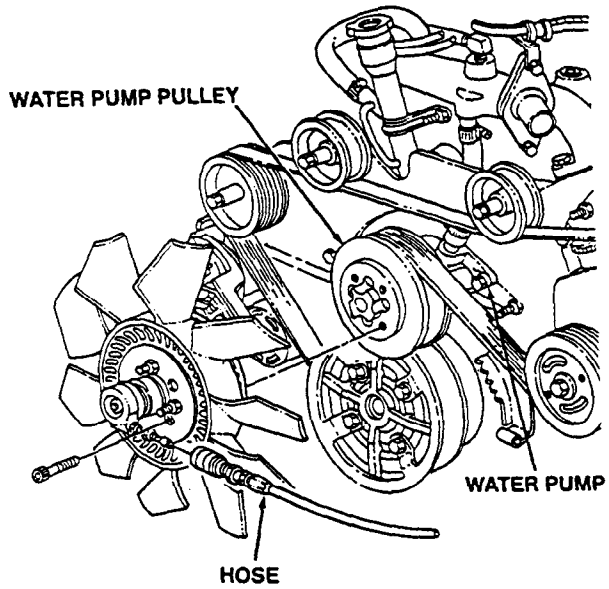

Listen for noisy bearings in the water pump, or an in-and-out motion to the fan.
You can also check the pump and pulley by trying to move it in and out or laterally with the engine off.

Replace the water pump pulley (para. 3-77).
Replace the water pump (para. 3-78).

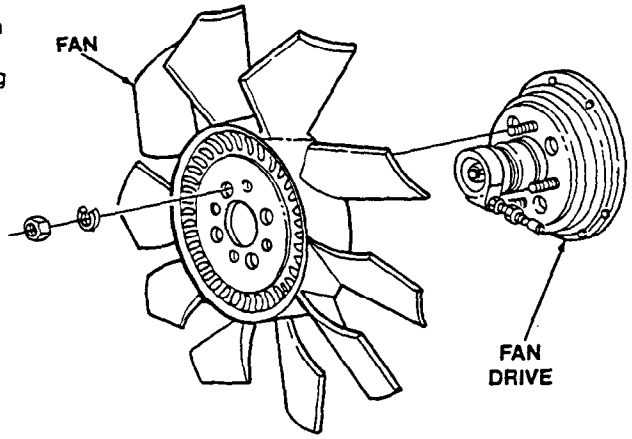

Replace serpentine belt (para. 3-81) .

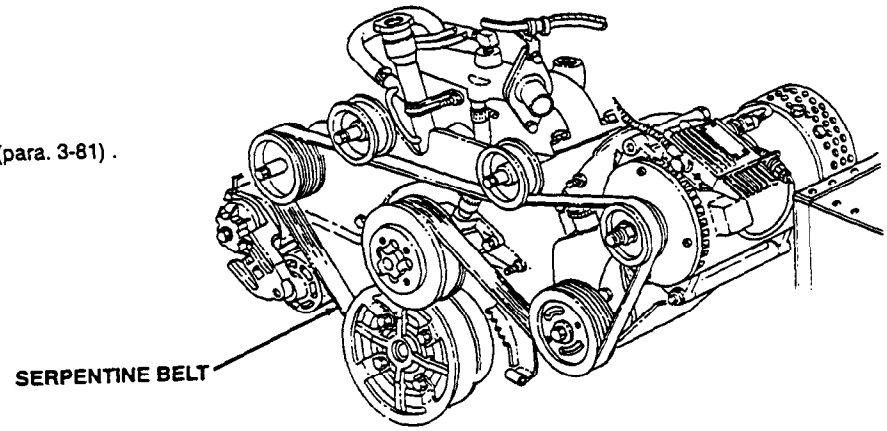

ENGINE COOLING **DIAGNOSTIC FLOWCHART**

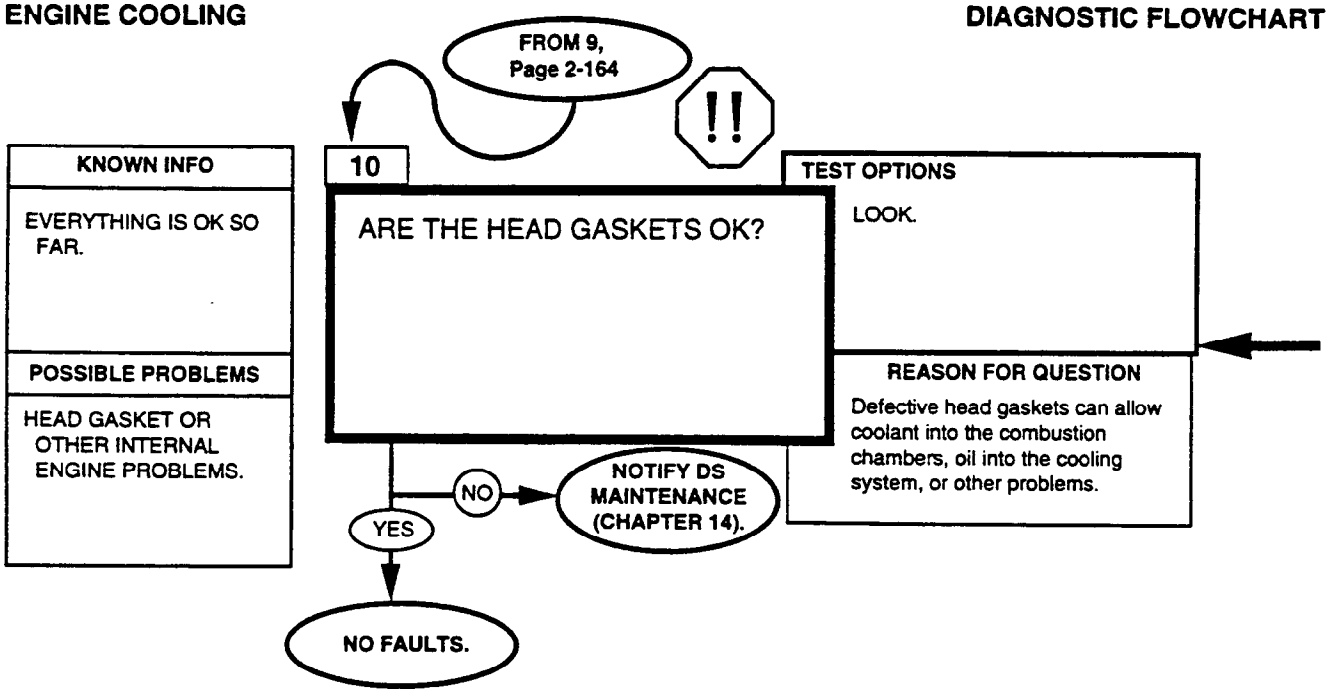

WARNING

Always use caution when approaching a hot engine. Failure to do so may result in serious burns.

Look for excessive white exhaust smoke, steam leaks in the engine compartment, and oil in the coolant. Other signs include excess condensation in the exhaust system, or white joints in the exhaust system. You can also feel the coolant hoses to see if they have high pressure caused by leaking combustion gasses. Also, if the glow plugs turn off very quickly after starting the engine, or if the engine overheats, or has excessive coolant consumption, you may have a head gasket problem.

ENGINE COOLING

DIAGNOSTIC FLOWCHART

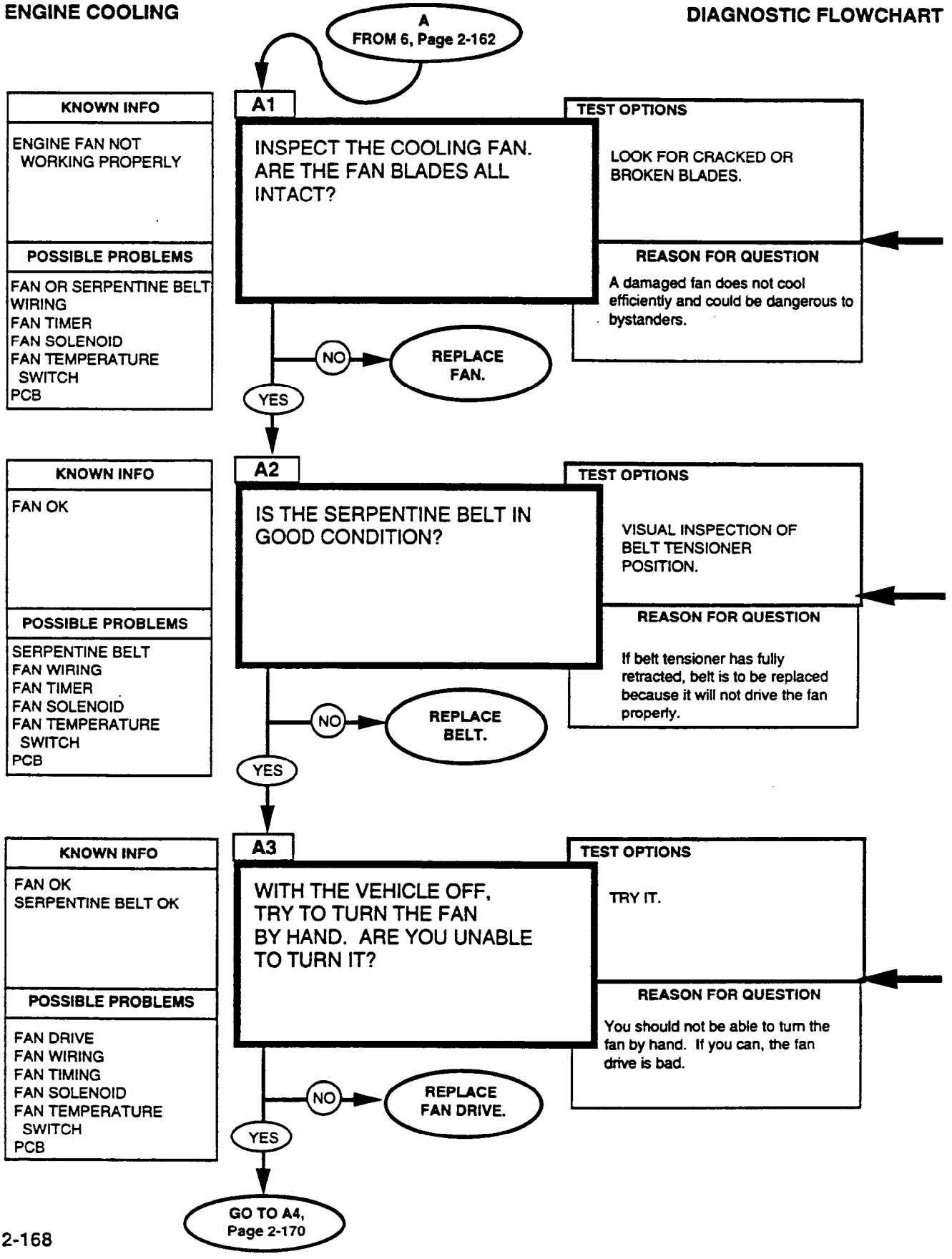

Replace fan (para. 3-80).

Replace serpentine belt (para. 3-81).

Replace fan drive (para. 3-80).

A YES answer to this question means that you were not able to turn the fan by hand.

FROM A3, Page 2-168

!!

A4

KNOWN INFO

FAN BLADES OK
SERPENTINE BELT OK
FAN DRIVE OK

POSSIBLE PROBLEMS

FAN WIRING
TIME-DELAY MODULE
CONTROL VALVE
FAN TEMPERATURE SWITCH
PCB

DISCONNECT WIRE 458B FROM THE FAN TEMPERATURE SWITCH. WITH THE ENGINE RUNNING, IS THE FAN ENGAGED?

TEST OPTIONS

LOOK.

REASON FOR QUESTION

Disconnecting 458B from the switch simulates a hot engine.

NO → GO TO B, Page 2-174

YES ↓

A5

KNOWN INFO

FAN BLADES OK
SERPENTINE BELT OK
DRIVE ENGAGES

POSSIBLE PROBLEMS

FAN WIRING
TIME-DELAY MODULE
CONTROL VALVE
PCB

DISCONNECT WIRE 458A FROM THE FAN TEMPERATURE SWITCH, JUMPER 458A TO 458B. DOES THE FAN DISENGAGE?

TEST OPTIONS

TRY IT. JUMP THE WIRES USING A SHORT PIECE OF WIRE WITH TWO MALE CONNECTORS.

REASON FOR QUESTION

Having battery voltage on 458A simulates a cold engine.

NO → GO TO C, Page 2-178

YES ↓

A6

KNOWN INFO

FAN OK
SERPENTINE BELT OK
FAN ENGAGES AND DISENGAGES

POSSIBLE PROBLEMS

FAN WIRING
TIME-DELAY MODULE
FAN TEMPERATURE SWITCH

MEASURE THE CONTINUITY THROUGH THE FAN TEMPERATURE SWITCH. THE SWITCH SHOULD BE OPEN AT TEMPERATURES ABOVE 215°F (102°C) AND CLOSED BELOW. IS THE SWITCH OK?

TEST OPTIONS

1. STE/ICE-R TEST 91 (Page 2-508)
2. MULTIMETER

REASON FOR QUESTION

To check the switch operation. Ideally, check the switch for open and closed operation.

NO → REPLACE FAN TEMPERATURE SWITCH.

YES ↓

GO TO A7, Page 2-172

REFERENCE INFORMATION

ENGINE COOLING

WARNING

Keep hands and arms away from fan blades and serpentine belt when engine is running or serious injury may result.

See page 2-163 for a description of the fan system operation and to see if it's engaged or not.

See page 2-163 for a description of the fan system operation and to see if it's engaged or not.

If you know the engine is cold and the fan temperature switch is good, you can reconnect 458B to the switch and see if the fan disengages.

RESISTANCE AND CONTINUITY
0-4,500 OHMS
STE/ICE-R TEST 91

1. Connect RED clip and BLACK clip to the terminations indicated in the question. RED to the first, BLACK to the second.
2. Start Test 91, 0-4,500 Ohms.
3. Displayed reading is in ohms. Less than 5 ohms is continuity. If the resistance is over 4,500 ohms, STE/ICE-R displays .9.9.9.9.

Replace the fan temperature switch (para. 4-34).

You can also remove the switch to test it hot and cold.

CONTINUITY (RESISTANCE)
MULTIMETER

1. Set the voltmeter to an ohms scale of about 1,000 ohms.
2. Connect the RED and BLACK leads to the connections stated in the question.
3. Be sure to read the correct scale. Less than 5 ohms indicates continuity. For an open circuit, the meter should peg full scale (needle all the way to the left).

ENGINE COOLING

DIAGNOSTIC FLOWCHART

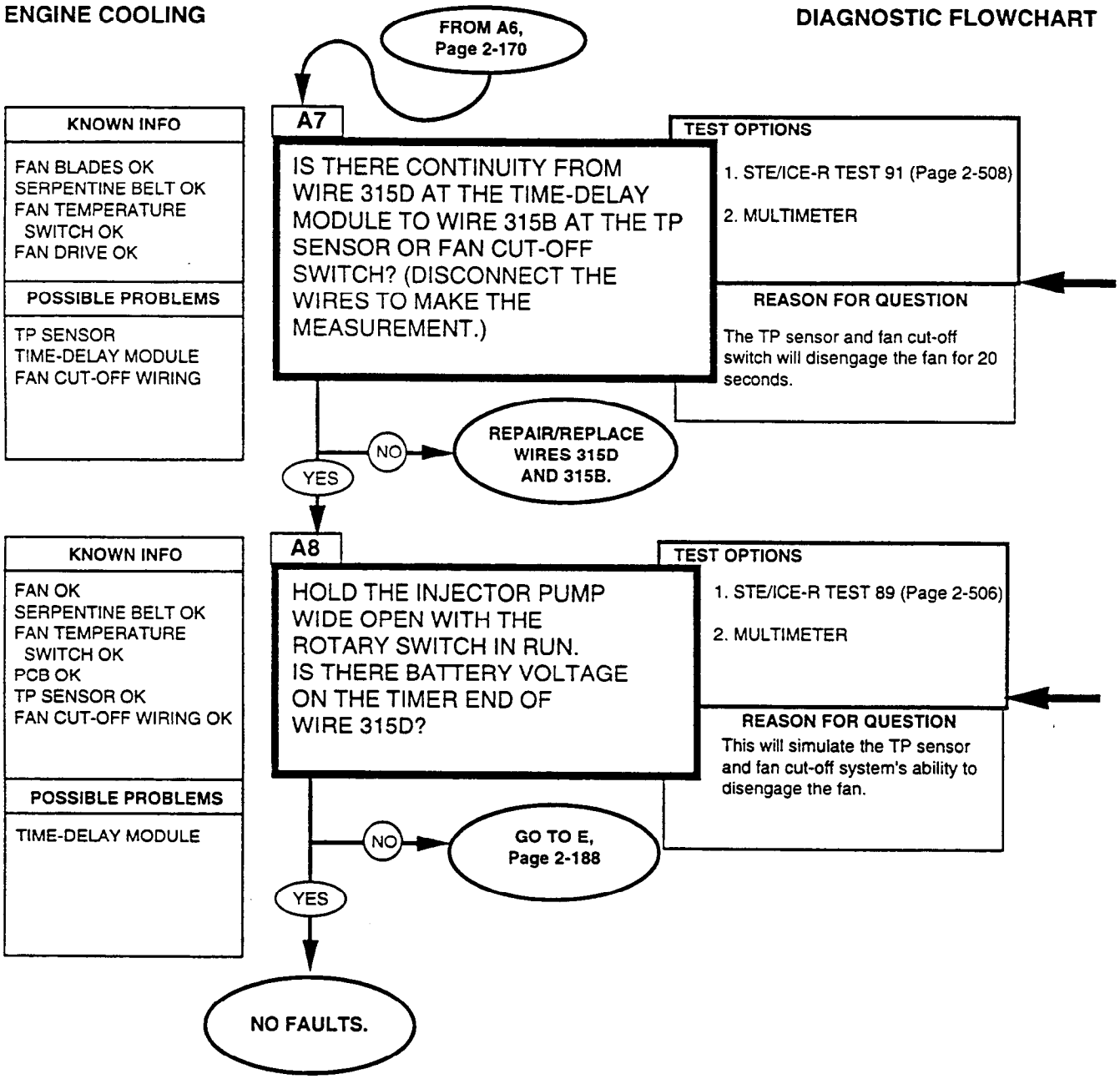

CONTINUITY (RESISTANCE) MULTIMETER

1. Set the voltmeter to an ohms scale of about 1,000 ohms.
2. Connect the RED and BLACK leads to the connections stated in the question.
3. Be sure to read the correct scale. Less than 5 ohms indicates continuity. For an open circuit, the meter should peg full scale (needle all the way to the left).

RESISTANCE AND CONTINUITY 0-4,500 OHMS STE/ICE-R TEST 91

1. Connect RED clip and BLACK clip to the terminations indicated in the question. RED to the first, BLACK to the second.
2. Start Test 91, 0-4,500 Ohms.
3. Displayed reading is in ohms. Less than 5 ohms is continuity. If the resistance is over 4,500 ohms, STE/ICE-R displays .9.9.9.9.

Disconnect the four-way connector at the time-delay module and measure the voltage on wire 315D.

DC VOLTAGE 0-45 VOLTS STE/ICE-R TEST 89

1. Connect RED clip to the indicated test point, BLACK clip to negative or ground.
2. Start Test 89, DC Volts.
3. Displayed reading is in volts.

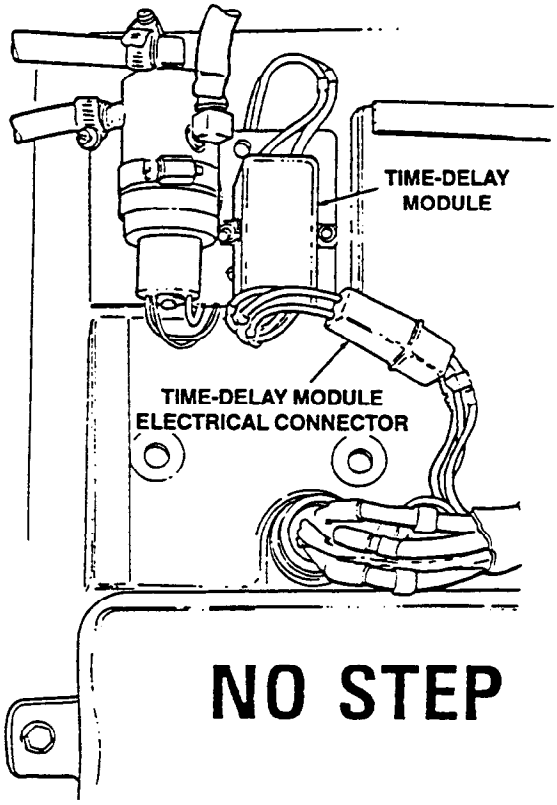

NO STEP

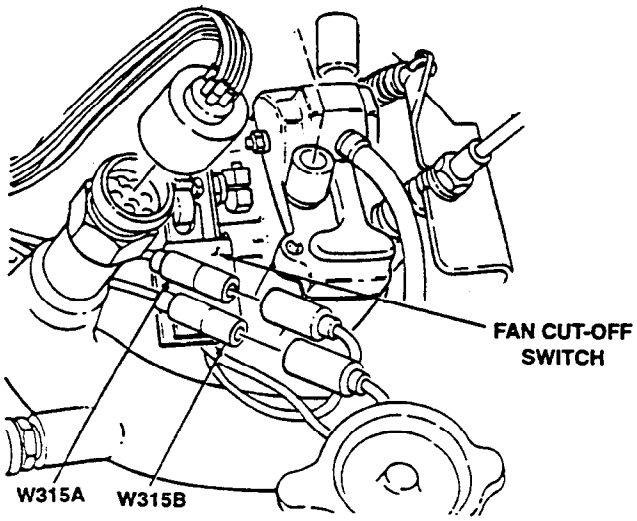

B
FROM A4,
Page 2-170

B1

KNOWN INFO
FAN DRIVE OK FAN DOESN'T ENGAGE VIA 458
POSSIBLE PROBLEMS
FAN WIRING TIME-DELAY MODULE FAN CONTROL VALVE PCB

DISCONNECT THE CONTROL VALVE ELECTRICAL CONNECTOR AT THE TIME-DELAY MODULE. DOES THE FAN ENGAGE?

TEST OPTIONS

TRY IT.

REASON FOR QUESTION

With no power to the solenoid, the fan should engage.

NO → REPLACE CONTROL VALVE.

YES ↓

B2

KNOWN INFO
FAN ENGAGES CONTROL VALVE OK
POSSIBLE PROBLEMS
WIRING

DISCONNECT THE 4-WIRE CONNECTOR AT THE TIME-DELAY MODULE. IS THERE CONTINUITY FROM 458B AT THE 4-WIRE HARNESS TO 458B AT THE FAN TEMPERATURE SWITCH?

TEST OPTIONS

1. STE/ICE-R TEST 91 (Page 2-508)
2. MULTIMETER

REASON FOR QUESTION

Wire 458B connects the switch and the timer.

NO → REPAIR/REPLACE WIRE 458B.

YES ↓

B3

KNOWN INFO
FAN ENGAGES CONTROL VALVE OK
POSSIBLE PROBLEMS
WIRING

WITH THE ROTARY SWITCH IN RUN, IS THERE BATTERY VOLTAGE AT WIRE 583B IN THE TIME-DELAY MODULE 4 WIRE CONNECTOR?

TEST OPTIONS

1. STE/ICE-R TEST 89 (Page 2-506)
2. MULTIMETER

REASON FOR QUESTION

Wire 583B connects battery voltage to the delay module.

NO → REPAIR/REPLACE WIRE 583B.

YES ↓

GO TO B4,
Page 2-176

RESISTANCE AND CONTINUITY
0-4,500 OHMS
STE/ICE-R TEST 91

1. Connect RED clip and BLACK clip to the terminations indicated in the question. RED to the first, BLACK to the second.
2. Start Test 91, 0-4,500 Ohms.
3. Displayed reading is in ohms. Less than 5 ohms is continuity. If the resistance is over 4,500 ohms, STE/ICE-R displays .9.9.9.9.

Replace control valve (para. 8- 25).

CONTINUITY (RESISTANCE)
MULTIMETER

1. Set the voltmeter to an ohms scale of about 1,000 ohms.
2. Connect the RED and BLACK leads to the connections stated in the question.
3. Be sure to read the correct scale. Less than 5 ohms indicates continuity. For an open circuit, the meter should peg full scale (needle all the way to the left).

Repair/replace wire (para. 4-80).

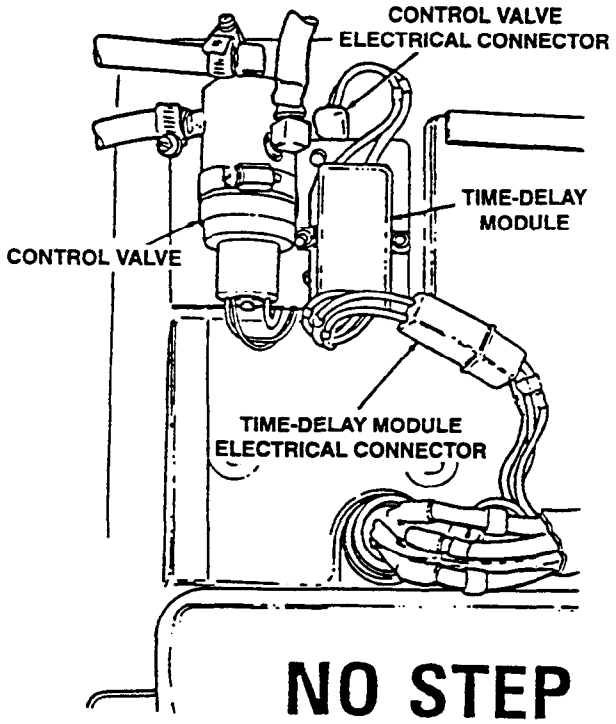

DC VOLTAGE 0-45 VOLTS
STE/ICE-R TEST 89

1. Connect RED clip to the indicated test point, BLACK clip to negative or ground.
2. Start Test 89, DC Volts.
3. Displayed reading is in volts.

Repair/replace wire (para. 4-80).

VOLTAGE
MULTIMETER

1. Set the voltmeter to a DC volts scale of at least 40 volts.
2. Connect the RED lead to positive and the BLACK lead to negative.
3. Be sure to read the correct scale.

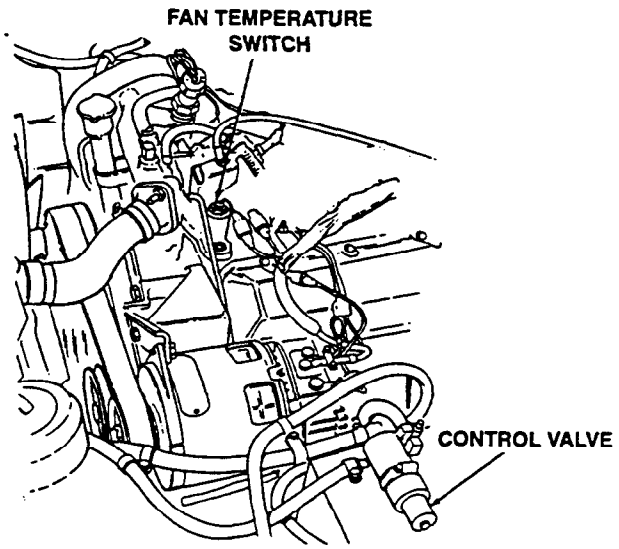

ENGINE COOLING

DIAGNOSTIC FLOWCHART

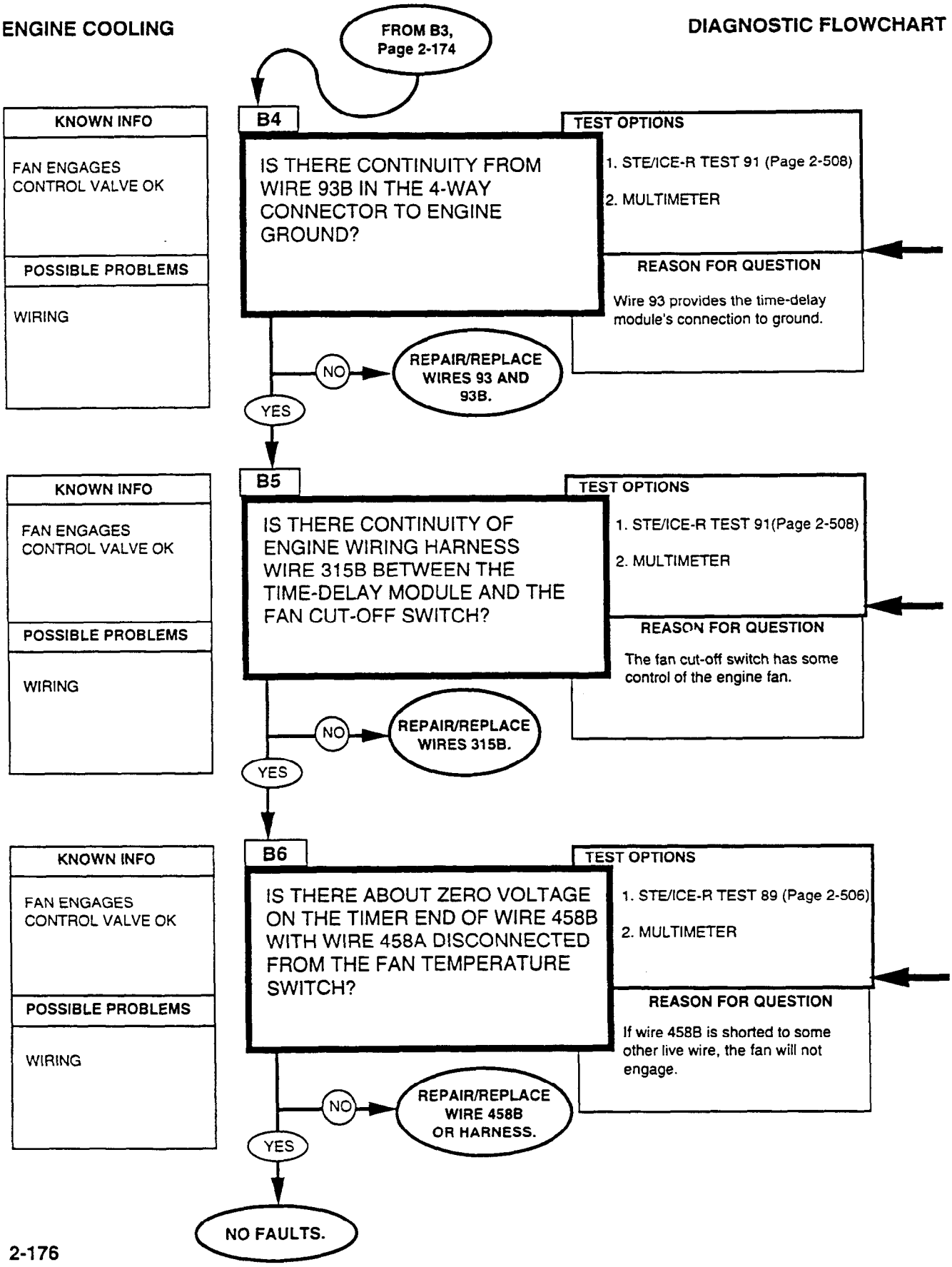

RESISTANCE AND CONTINUITY
0-4,500 OHMS
STE/ICE-R TEST 91

1. Connect RED clip and BLACK clip to the terminations indicated in the question. RED to the first, BLACK to the second.
2. Start Test 91, 0-4,500 Ohms.
3. Displayed reading is in ohms. Less than 5 ohms is continuity. If the resistance is over 4,500 ohms, STE/ICE-R displays .9.9.9.9.

Repair/replace wires (para. 4-80).

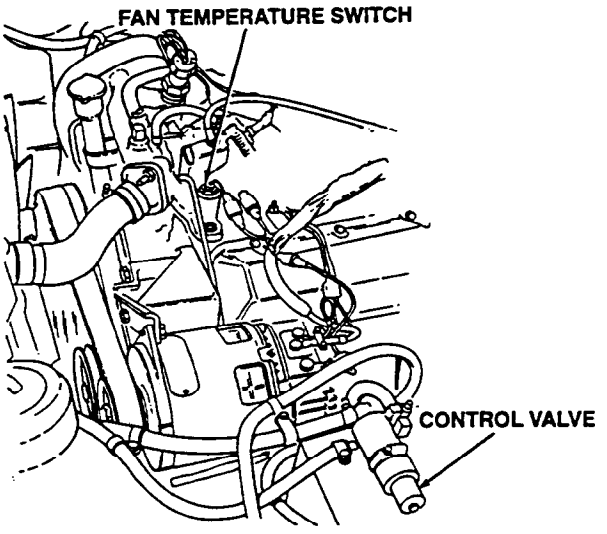

CONTINUITY (RESISTANCE)
MULTIMETER

1. Set the voltmeter to an ohms scale of about 1,000 ohms.
2. Connect the RED and BLACK leads to the connections stated in the question.
3. Be sure to read the correct scale. Less than 5 ohms indicates continuity. For an open circuit, the meter should peg full scale (needle all the way to the left).

Repair/replace wires (para. 4-80).

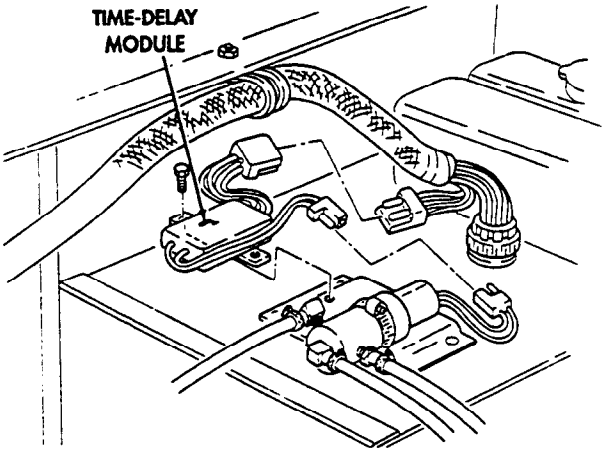

DC VOLTAGE 0-45 VOLTS
STE/ICE-R TEST 89

1. Connect RED clip to the indicated test point, BLACK clip to negative or ground.
2. Start Test 89, DC Volts.
3. Displayed reading is in volts.

Repair/replace wires (para. 4-80).

VOLTAGE
MULTIMETER

1. Set the voltmeter to a DC volts scale of at least 40 volts.
2. Connect the RED lead to positive and the BLACK lead to negative.
3. Be sure to read the correct scale.

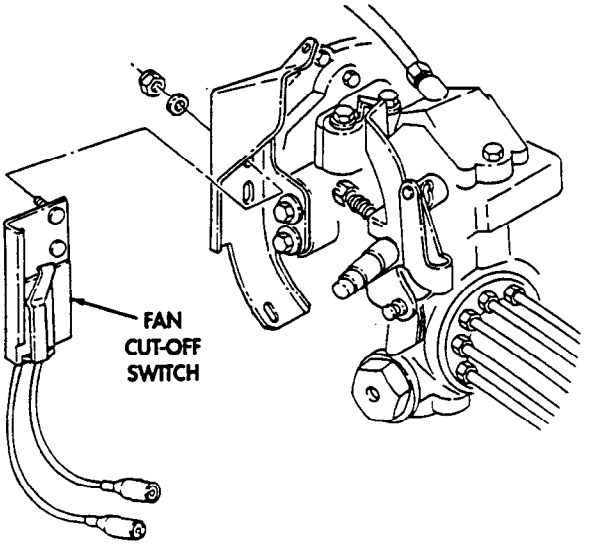

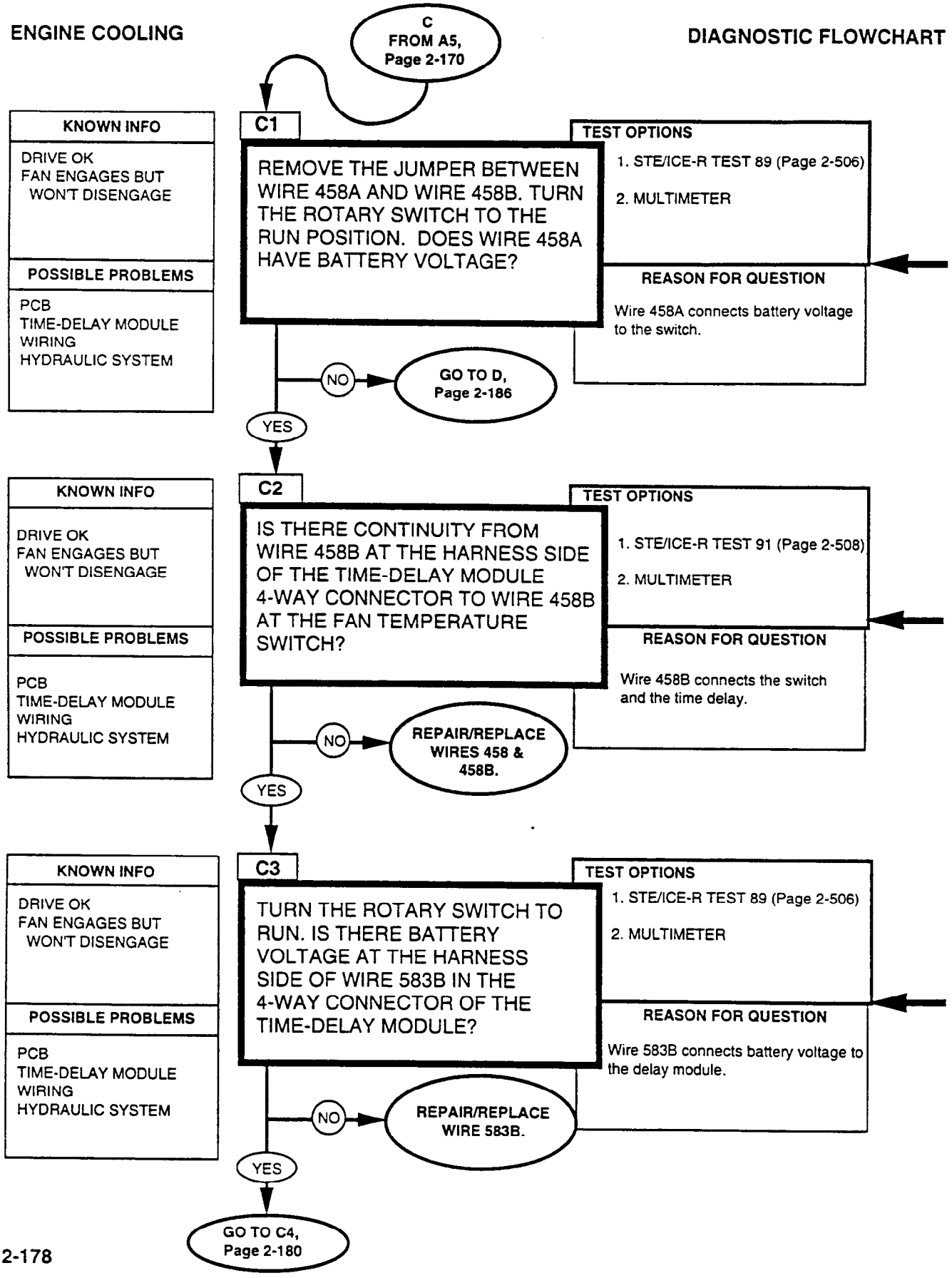
C
FROM A5,
Page 2-170
KNOWN INFO
DRIVE OK
FAN ENGAGES BUT
WON'T DISENGAGE
POSSIBLE PROBLEMS
PCB
TIME-DELAY MODULE
WIRING
HYDRAULIC SYSTEM
C1
REMOVE THE JUMPER BETWEEN WIRE 458A AND WIRE 458B. TURN THE ROTARY SWITCH TO THE RUN POSITION. DOES WIRE 458A HAVE BATTERY VOLTAGE?
TEST OPTIONS
1. STE/ICE-R TEST 89 (Page 2-506)
2. MULTIMETER
REASON FOR QUESTION
Wire 458A connects battery voltage to the switch.
NO
GO TO D,
Page 2-186
YES
KNOWN INFO
DRIVE OK
FAN ENGAGES BUT
WON'T DISENGAGE
POSSIBLE PROBLEMS
PCB
TIME-DELAY MODULE
WIRING
HYDRAULIC SYSTEM
C2
IS THERE CONTINUITY FROM WIRE 458B AT THE HARNESS SIDE OF THE TIME-DELAY MODULE 4-WAY CONNECTOR TO WIRE 458B AT THE FAN TEMPERATURE SWITCH?
TEST OPTIONS
1. STE/ICE-R TEST 91 (Page 2-508)
2. MULTIMETER
REASON FOR QUESTION
Wire 458B connects the switch and the time delay.
NO
REPAIR/REPLACE WIRES 458 & 458B.
YES
KNOWN INFO
DRIVE OK
FAN ENGAGES BUT
WON'T DISENGAGE
POSSIBLE PROBLEMS
PCB
TIME-DELAY MODULE
WIRING
HYDRAULIC SYSTEM
C3
TURN THE ROTARY SWITCH TO RUN. IS THERE BATTERY VOLTAGE AT THE HARNESS SIDE OF WIRE 583B IN THE 4-WAY CONNECTOR OF THE TIME-DELAY MODULE?
TEST OPTIONS
1. STE/ICE-R TEST 89 (Page 2-506)
2. MULTIMETER
REASON FOR QUESTION
Wire 583B connects battery voltage to the delay module.
NO
REPAIR/REPLACE WIRE 583B.
YES
GO TO C4,
Page 2-180

REFERENCE INFORMATION

ENGINE COOLING

DC VOLTAGE 0-45 VOLTS
STE/ICE-R TEST 89

1. Connect RED clip to the indicated test point, BLACK clip to negative or ground.
2. Start Test 89, DC Volts.
3. Displayed reading is in volts.

VOLTAGE
MULTIMETER

1. Set the voltmeter to a DC volts scale of at least 40 volts.
2. Connect the RED lead to positive and the BLACK lead to negative.
3. Be sure to read the correct scale.

RESISTANCE AND CONTINUITY
0-4,500 OHMS
STE/ICE-R TEST 91

1. Connect RED clip and BLACK clip to the terminations indicated in the question. RED to the first, BLACK to the second.
2. Start Test 91, 0-4,500 Ohms.
3. Displayed reading is in ohms. Less than 5 ohms is continuity. If the resistance is over 4,500 ohms, STE/ICE-R displays .9.9.9.9.

Repair/replace wires (para. 4-80).

CONTINUITY (RESISTANCE)
MULTIMETER

1. Set the voltmeter to an ohms scale of about 1,000 ohms.
2. Connect the RED and BLACK leads to the connections stated in the question.
3. Be sure to read the correct scale. Less than 5 ohms indicates continuity. For an open circuit, the meter should peg full scale (needle all the way to the left).

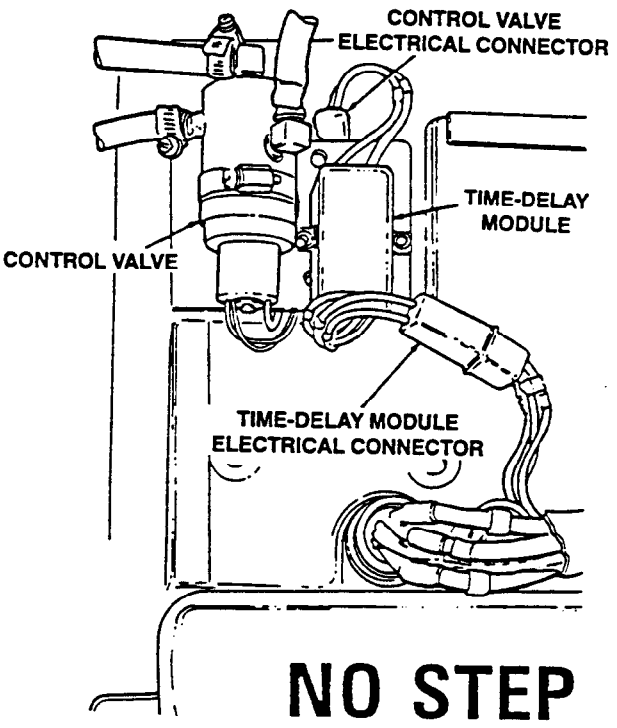

NO STEP

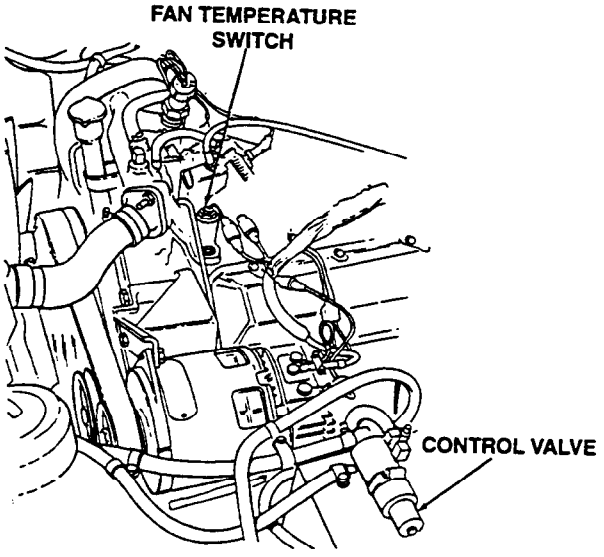

ENGINE COOLING

DIAGNOSTIC FLOWCHART

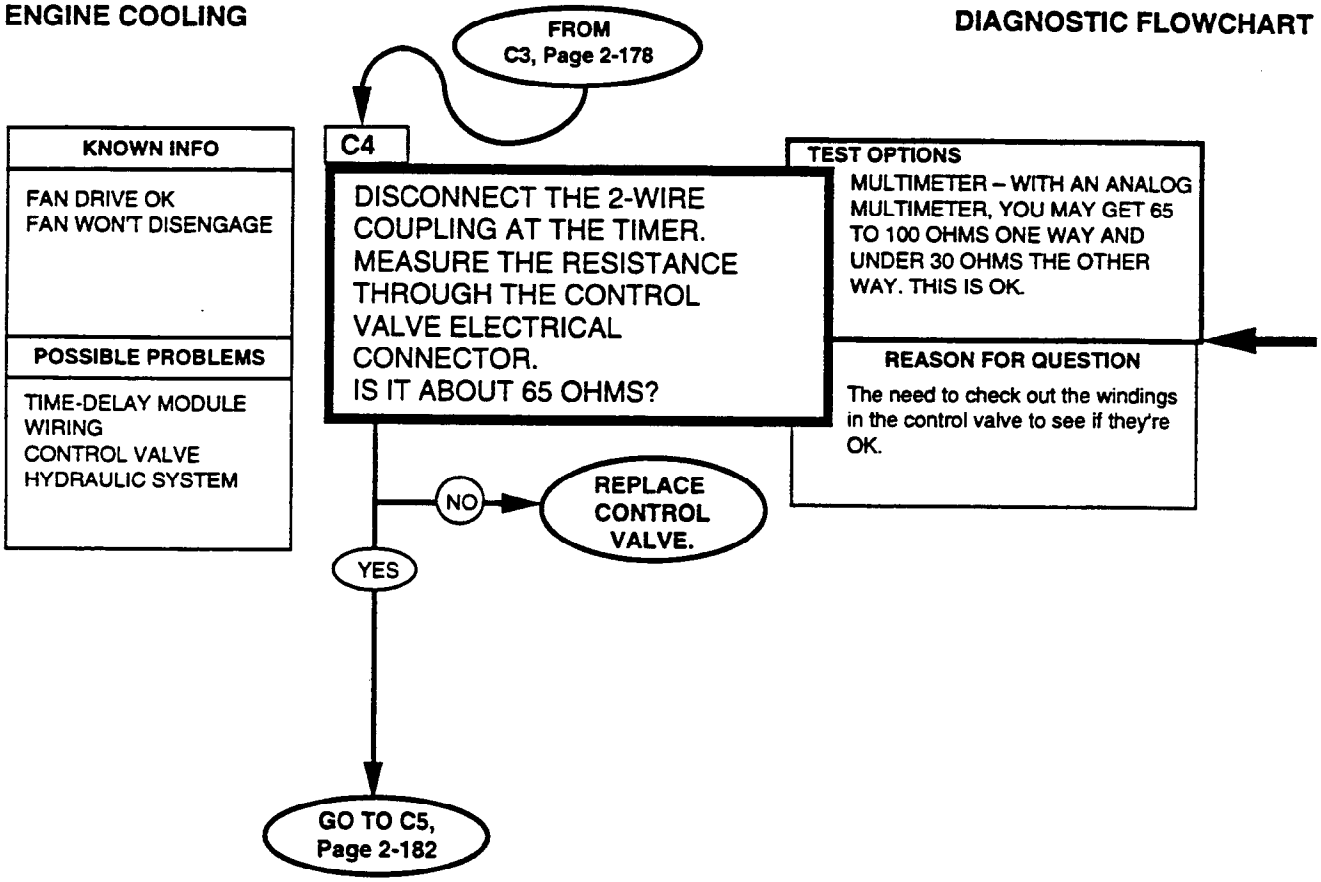

REFERENCE INFORMATION

When checking coil resistance, use an analog-type multimeter.

For an accurate ohms reading, perform this check when the system is at room temperature. Heat will increase resistance, resulting in a higher ohms reading.

Replace control valve (para. 8-25).

CONTINUITY (RESISTANCE) MULTIMETER

1. Set the voltmeter to an ohms scale of about 1,000 ohms.
2. Connect the RED and BLACK leads to the connections stated in the question.
3. Be sure to read the correct scale. Less than 5 ohms indicates continuity. For an open circuit, the meter should peg full scale (needle all the way to the left).

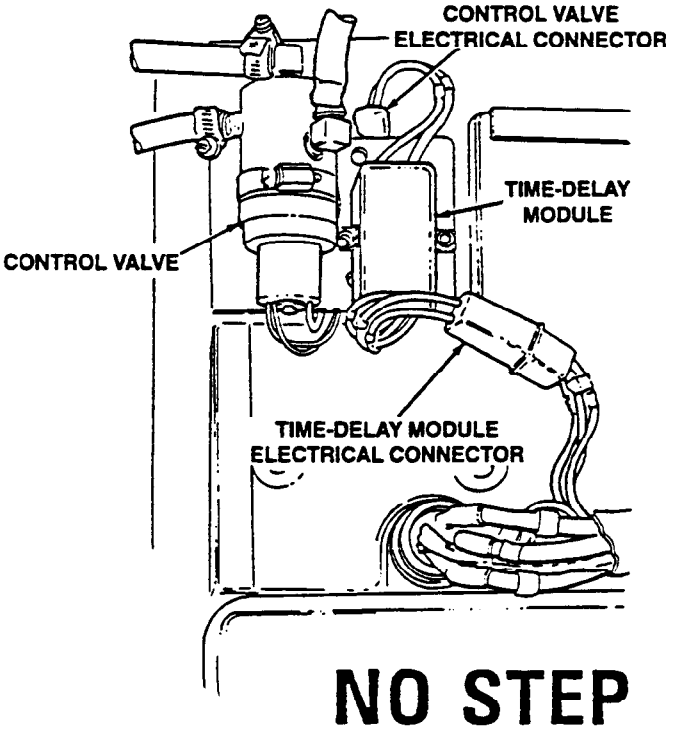

NO STEP

FROM C4, Page 2-180

C5

KNOWN INFO

FAN DRIVE OK
FAN WON'T DISENGAGE
CONTROL VALVE OK

POSSIBLE PROBLEMS

TIME-DELAY MODULE
WIRING
HYDRAULIC SYSTEM

DISCONNECT THE 4-WIRE CONNECTOR ON THE TIMER. IS THERE CONTINUITY FROM WIRE 93B ON THE HARNESS SIDE OF THE 4-WAY CONNECTOR-TO-ENGINE GROUND?

TEST OPTIONS

1. STE/ICE-R TEST 91 (Page 2-508)
2. MULTIMETER

REASON FOR QUESTION

The need to test out the ground connection of the time-delay module and control valve.

NO → REPLACE WIRING 93B.

YES ↓

C6

KNOWN INFO

FAN DRIVE OK
FAN WON'T DISENGAGE
CONTROL VALVE OK

POSSIBLE PROBLEMS

TIME-DELAY MODULE
WIRING
HYDRAULIC SYSTEM

RECONNECT THE 4-WIRE CONNECTOR. IS THERE ABOUT 580Ω FROM WIRE 93B ON THE TIMER SIDE OF THE 2-WIRE COUPLING TO ENGINE GROUND?

TEST OPTIONS

1. STE/ICE-R TEST 91 (Page 2-508)
2. MULTIMETER

REASON FOR QUESTION

This measurement will help to tell you if the time-delay module is OK.

NO → REPLACE TIME-DELAY MODULE.

YES ↓

C7

KNOWN INFO

FAN DRIVE OK
FAN WON'T DISENGAGE
CONTROL VALVE OK

POSSIBLE PROBLEMS

TIME-DELAY MODULE
WIRING
HYDRAULIC SYSTEM

IS THERE CONTINUITY FROM WIRE 458B IN THE 4-WIRE CONNECTOR HARNESS TO WIRE 458B AT THE FAN TEMPERATURE SWITCH?

TEST OPTIONS

1. STE/ICE-R TEST 91 (page 2-508)
2. MULTIMETER

REASON FOR QUESTION

This measurement will help tell you if the time-delay module is OK.

NO → REPLACE TIME-DELAY MODULE.

YES ↓

GO TO C8, Page 2-184

REFERENCE INFORMATION

ENGINE COOLING

Repair wire or replace harness (para. 4-80).

RESISTANCE AND CONTINUITY
0-4,500 OHMS
STE/ICE-R TEST 91

1. Connect RED clip and BLACK clip to the terminations indicated in the question. RED to the first, BLACK to the second.
2. Start Test 91, 0-4,500 Ohms.
3. Displayed reading is in ohms. Less than 5 ohms is continuity. If the resistance is over 4,500 ohms, STE/ICE-R displays .9.9.9.9.

Replace time-delay module (para. 4-35).

CONTINUITY (RESISTANCE)
MULTIMETER

1. Set the voltmeter to an ohms scale of about 1,000 ohms.
2. Connect the RED and BLACK leads to the connections stated in the question.
3. Be sure to read the correct scale. Less than 5 ohms indicates continuity. For an open circuit, the meter should peg full scale (needle all the way to the left).

Replace time-delay module (para. 4-35).

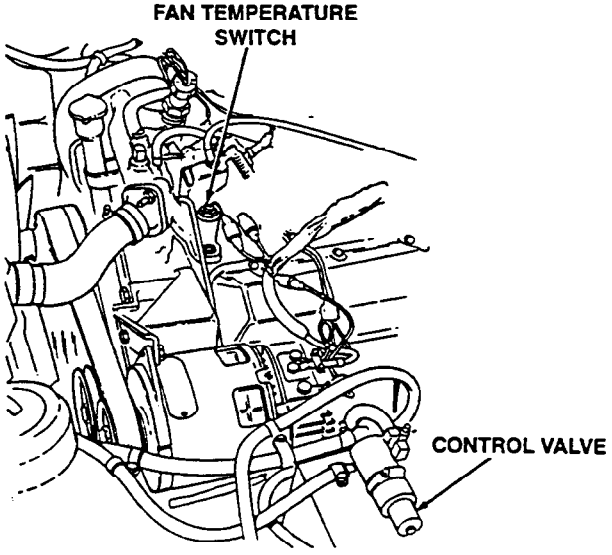

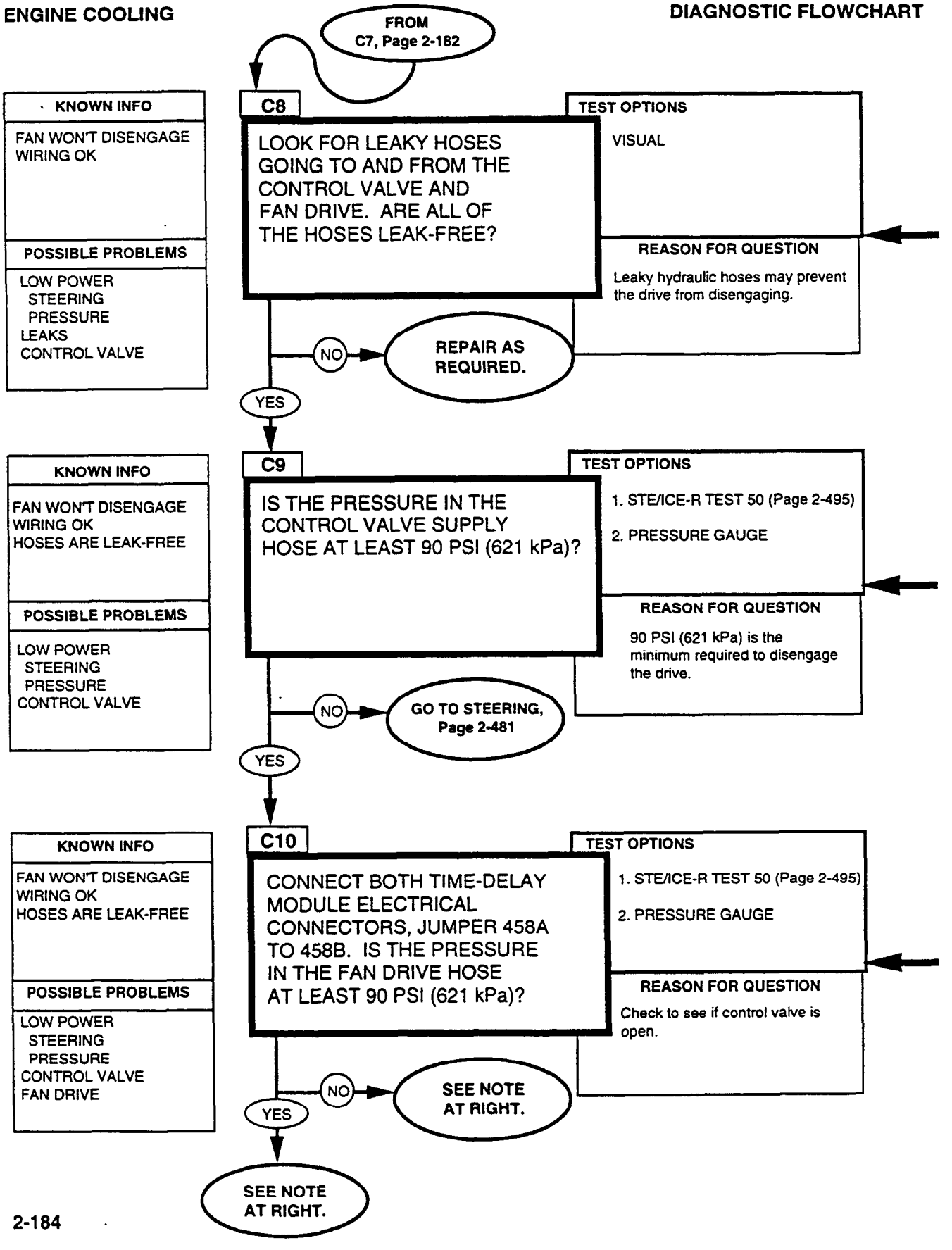
FROM
C7, Page 2-182
KNOWN INFO
FAN WON'T DISENGAGE
WIRING OK
POSSIBLE PROBLEMS
LOW POWER
STEERING
PRESSURE
LEAKS
CONTROL VALVE
C8
LOOK FOR LEAKY HOSES GOING TO AND FROM THE CONTROL VALVE AND FAN DRIVE. ARE ALL OF THE HOSES LEAK-FREE?
TEST OPTIONS
VISUAL
REASON FOR QUESTION
Leaky hydraulic hoses may prevent the drive from disengaging.
NO
REPAIR AS REQUIRED.
YES
KNOWN INFO
FAN WON'T DISENGAGE
WIRING OK
HOSES ARE LEAK-FREE
POSSIBLE PROBLEMS
LOW POWER
STEERING
PRESSURE
CONTROL VALVE
C9
IS THE PRESSURE IN THE CONTROL VALVE SUPPLY HOSE AT LEAST 90 PSI (621 kPa)?
TEST OPTIONS
1. STE/ICE-R TEST 50 (Page 2-495)
2. PRESSURE GAUGE
REASON FOR QUESTION
90 PSI (621 kPa) is the minimum required to disengage the drive.
NO
GO TO STEERING, Page 2-481
YES
KNOWN INFO
FAN WON'T DISENGAGE
WIRING OK
HOSES ARE LEAK-FREE
POSSIBLE PROBLEMS
LOW POWER
STEERING
PRESSURE
CONTROL VALVE
FAN DRIVE
C10
CONNECT BOTH TIME-DELAY MODULE ELECTRICAL CONNECTORS, JUMPER 458A TO 458B. IS THE PRESSURE IN THE FAN DRIVE HOSE AT LEAST 90 PSI (621 kPa)?
TEST OPTIONS
1. STE/ICE-R TEST 50 (Page 2-495)
2. PRESSURE GAUGE
REASON FOR QUESTION
Check to see if control valve is open.
NO
SEE NOTE AT RIGHT.
YES
SEE NOTE AT RIGHT.

REFERENCE INFORMATION

ENGINE COOLING

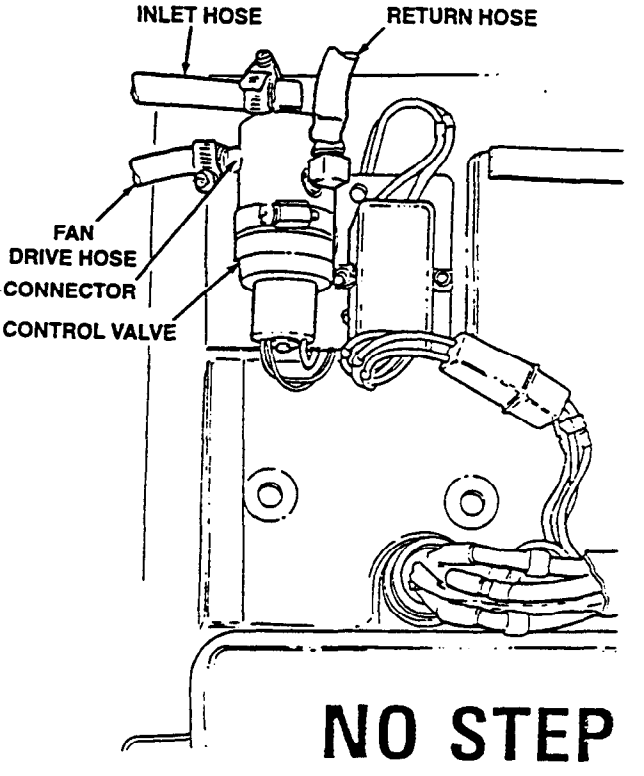

Replace hoses (para. 8-25).

STE/ICE-R TEST 50
0 TO 1,000 PSIG PRESSURE

1. Connect transducer to valve after removing connector (para 8-25). Do offset test.
2. Connect BLUE pressure transducer to A W4 cable. Make sure the system under test is not pressurized.
3. Turn on system and read pressure.

NO STEP

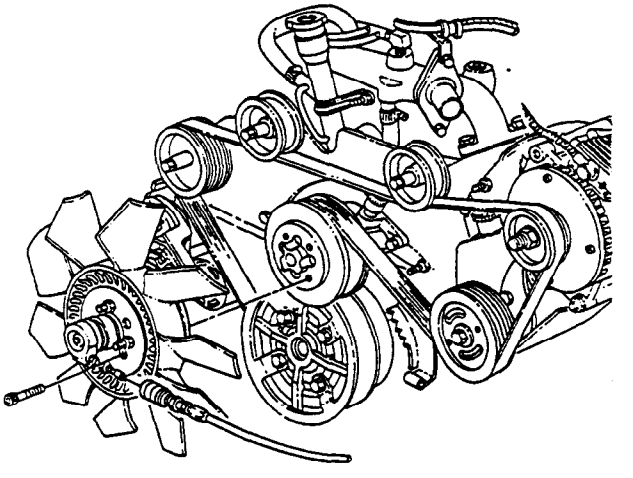

Measure the pressure at the valve outlet. Remove the fan drive hose and connector from the valve body and screw transducer into the valve. Start the engine and look for leaks.

Replace control valve and/or fan drive (para. 8-25 or 3-80). Check to see if hoses are blocked prior to replacing parts, and perform back flush procedure (para. 8-25).

If pressure in the fan drive hose is not at least 90 psi (621 kPa), perform back flush procedure (para. 8-25). Recheck pressure. If pressure is not at least 90 psi (621 kPa), replace control valve.

If pressure in the fan drive hose is at least 90 psi (621 kPa), check for blockage in hose between the control valve and fan drive. If hose is not blocked, replace fan drive (para. 3-80).

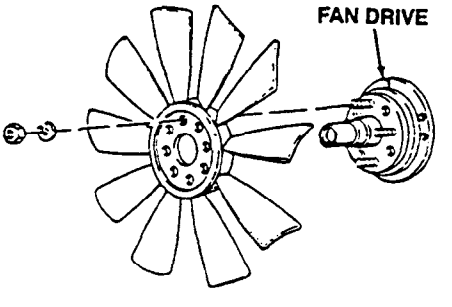

ENGINE COOLING

DIAGNOSTIC FLOWCHART

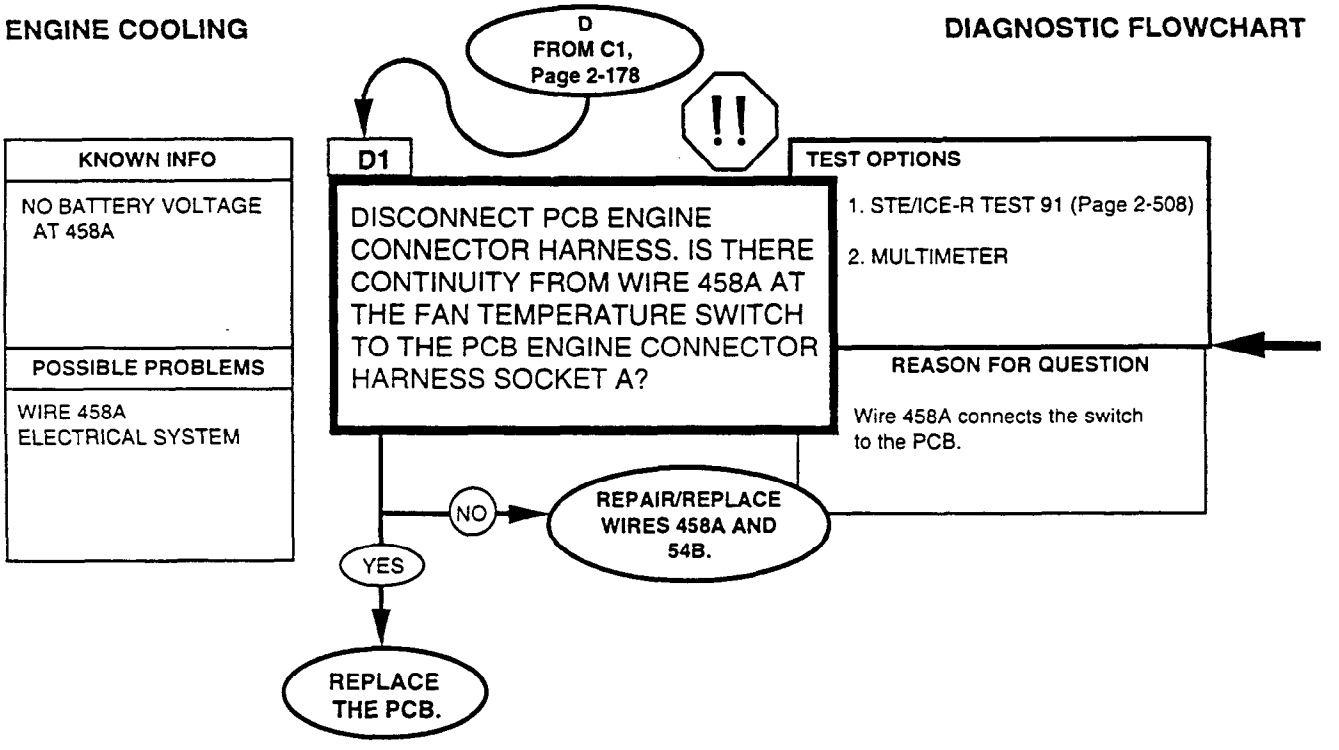

REFERENCE INFORMATION

WARNING

Disconnect negative battery cable before disconnecting and reconnecting PCB harness.

WARNING

There is battery voltage at the PCB at all times. Failure to disconnect battery cable will result in damage to equipment or injury to personnel.

Replace PCB (refer to para. 4-4).

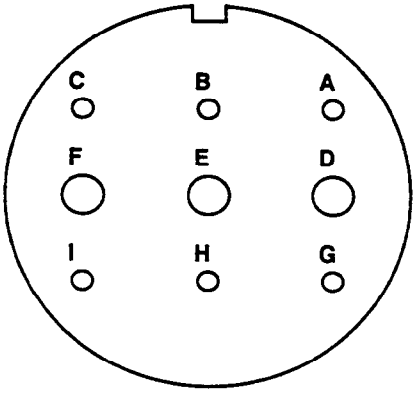

PCB ENGINE CONNECTOR

RESISTANCE AND CONTINUITY
0-4,500 OHMS
STE/ICE-R TEST 91

1. Connect RED clip and BLACK clip to the terminations indicated in the question. RED to the first, BLACK to the second.
2. Start Test 91, 0-4,500 Ohms.
3. Displayed reading is in ohms. Less than 5 ohms is continuity. If the resistance is over 4,500 ohms, STE/ICE-R displays .9.9.9.9.

CONTINUITY (RESISTANCE)
MULTIMETER

1. Set the voltmeter to an ohms scale of about 1,000 ohms.
2. Connect the RED and BLACK leads to the connections stated in the question.
3. Be sure to read the correct scale. Less than 5 ohms indicates continuity. For an open circuit, the meter should peg full scale (needle all the way to the left).

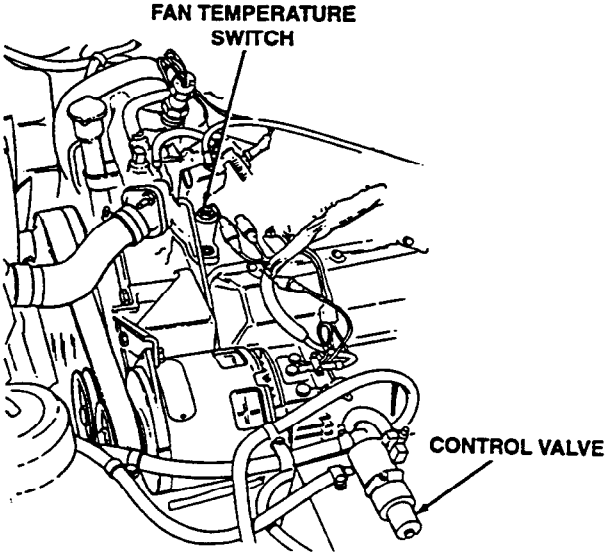

ENGINE COOLING

DIAGNOSTIC FLOWCHART

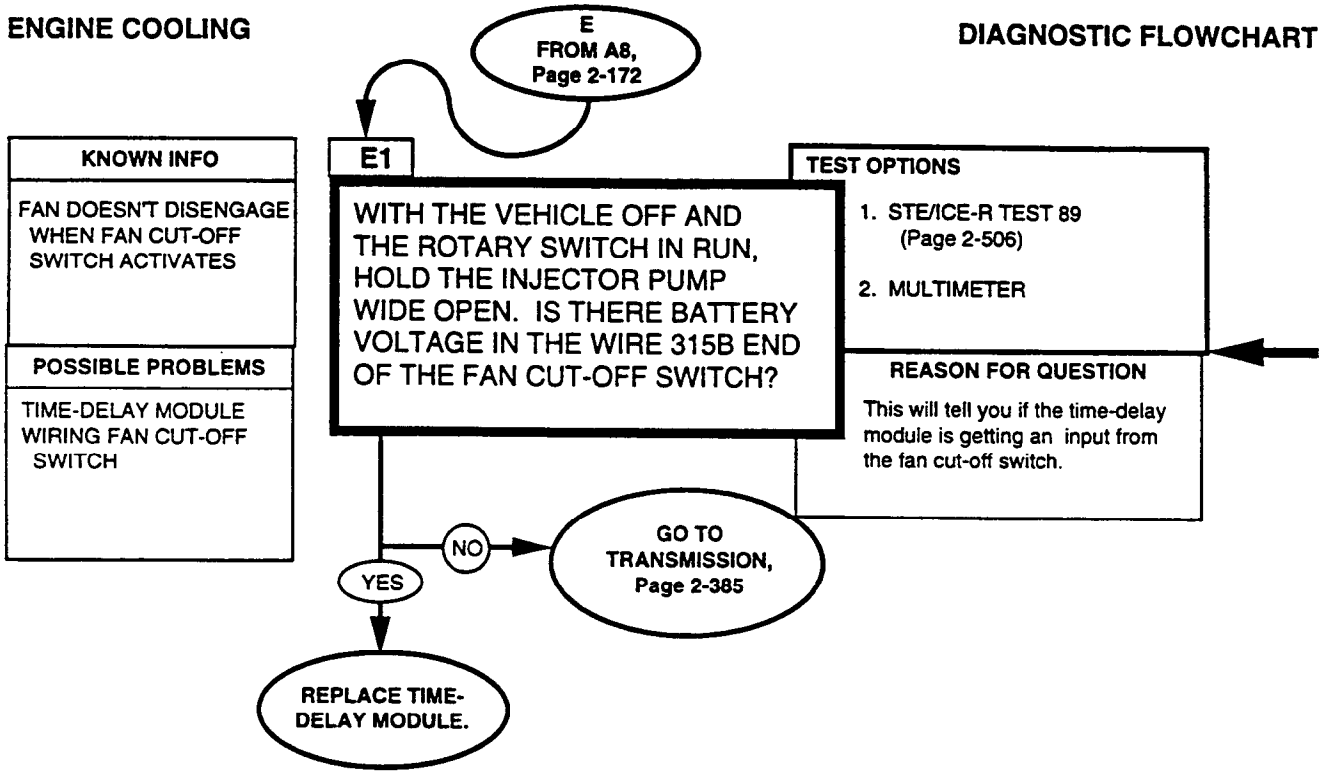

Replace time-delay module (para. 4-35).

DC VOLTAGE 0-45 VOLTS STE/ICE-R TEST 89
1. Connect RED clip to the indicated test point, BLACK clip to negative or ground. 2. Start Test 89, DC Volts. 3. Displayed reading is in volts.

VOLTAGE MULTIMETER
1. Set the voltmeter to a DC volts scale of at least 40 volts. 2. Connect the RED lead to positive and the BLACK lead to negative. 3. Be sure to read the correct scale.

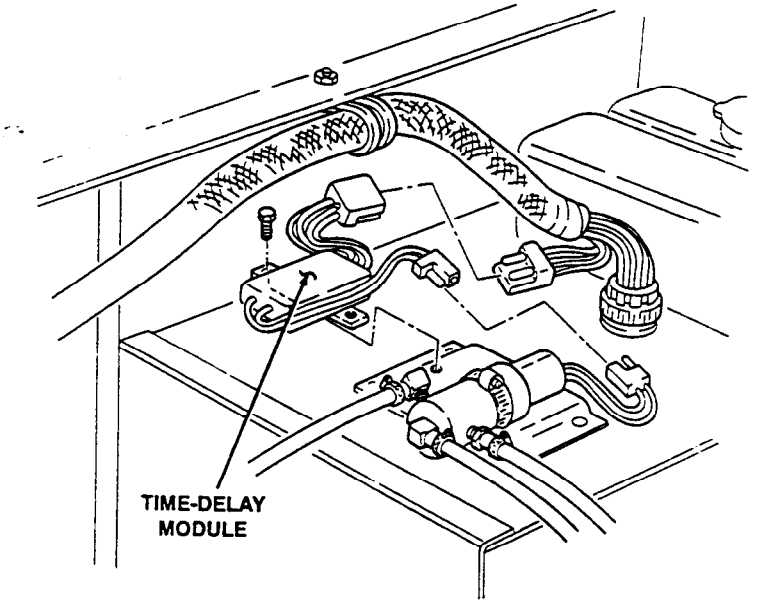

2-32. ENGINE LUBRICATION TESTS

These engine lubrication tests may be run any time there is an engine lubrication problem or if you were sent here by another test chain. Just follow the path, answering the questions. Additional information and notes are given on the facing page when necessary.

Fold-out page FP-9 shows the location of the major components of the engine lubrication system in case you are not familiar with them. This page may be left open for reference while testing.

ENGINE LUBRICATION

DIAGNOSTIC FLOWCHART

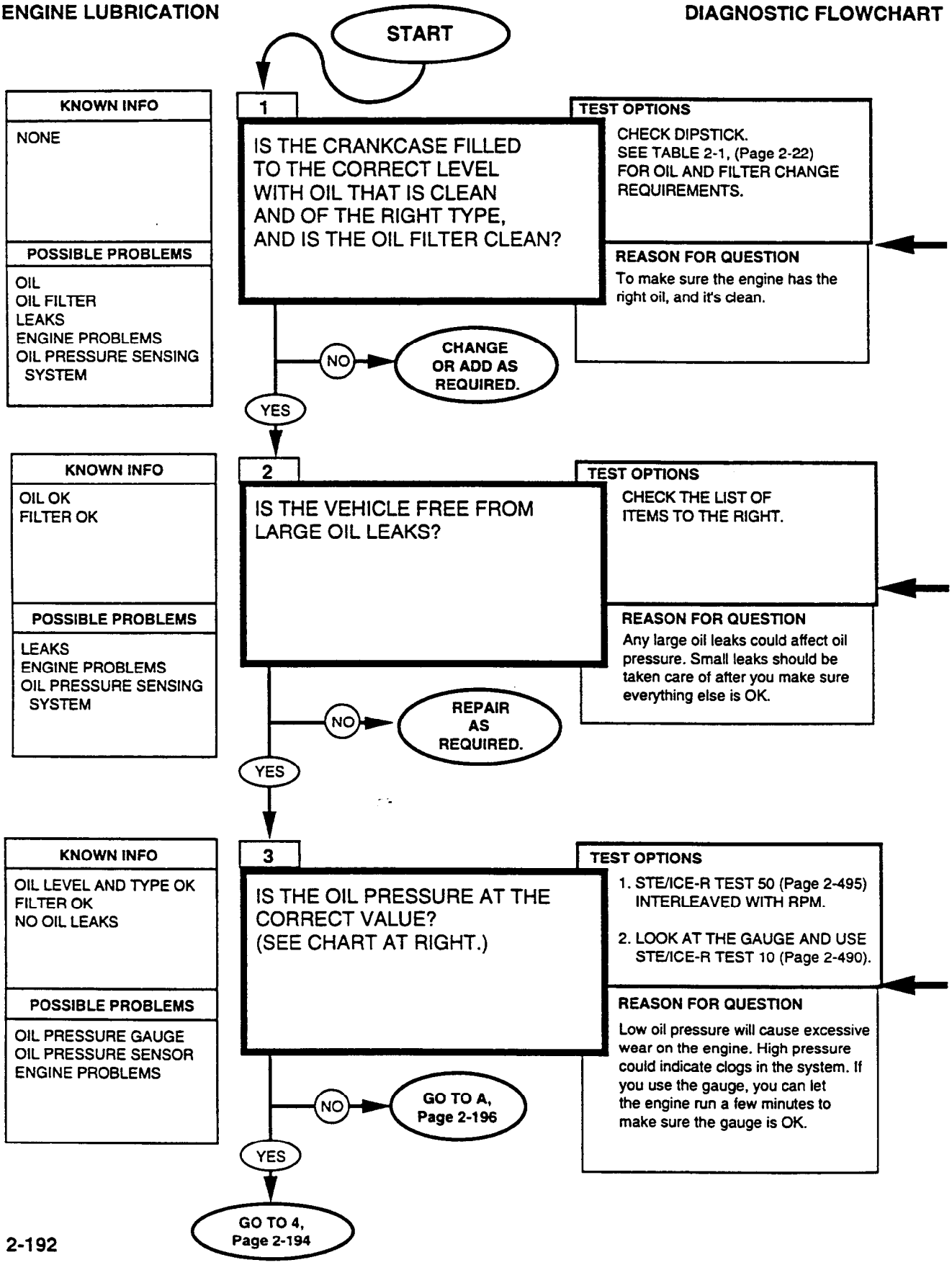

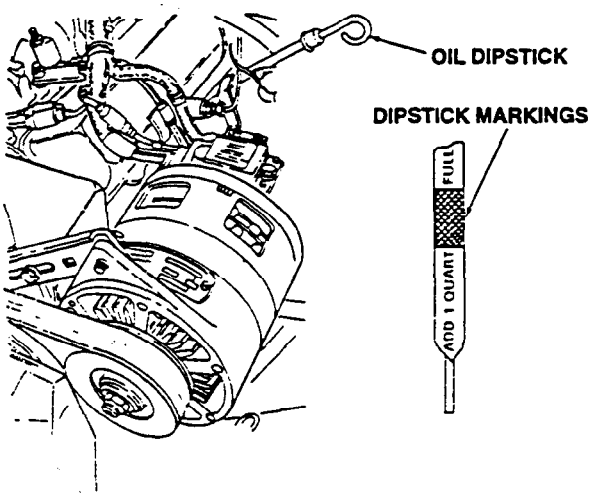

Incorrect oil level and type can cause pressure problems, leaks, excessive blowby, and other problems.

Inspect the oil cooler, oil cooler supply return lines, CDR valve hoses, oil pan, and oil filter. Test CDR valve (para. 3-9). See the location on parts page to find these parts.

ENGINE RPM STE/ICE-R TEST 10
1. Start Test 10, Engine RPM. 2. Crank or start the engine. Displayed reading is rpm. Cranking rpm should be approximately 200. Idle rpm should be 700-750.

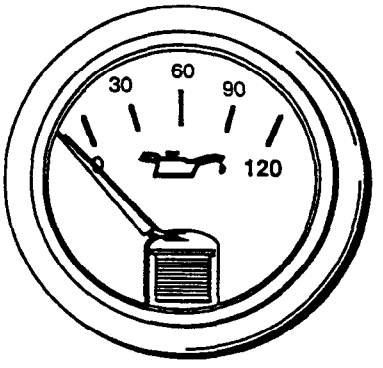

OIL PRESSURE GAUGE

OIL PRESSURE CHART

ENGINE RPM	APPROXIMATE OIL PRESSURE
STOP	0 PSI (0 kPa)
IDLE (725 ± 25)	15-20 PSI (103-138 kPa)
2,000	40-50 PSI (276-345 kPa)

Remove sending unit (para. 4-29).

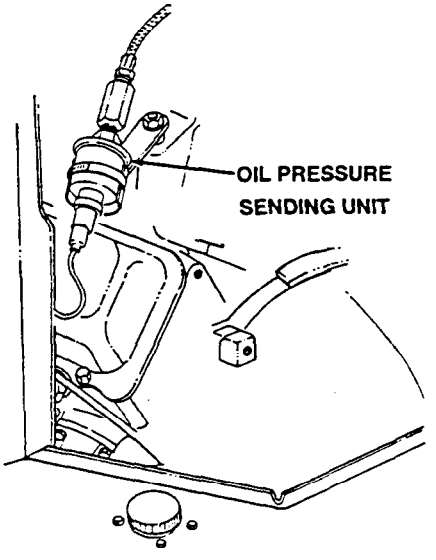

ENGINE RPM INTERLEAVE WITH 0-1,000 PSI PRESSURE
1. Connect BLUE transducer in place of oil pressure sending unit. Dial test 50 (0-1,000 psi (0-6,895 kPa)). Perform offset test. 2. Dial test 01, interleave with RPM. Dial test 50. 3. Start engine and observe display. VTM will display RPM, then PSI.

ENGINE LUBRICATION

DIAGNOSTIC FLOWCHART

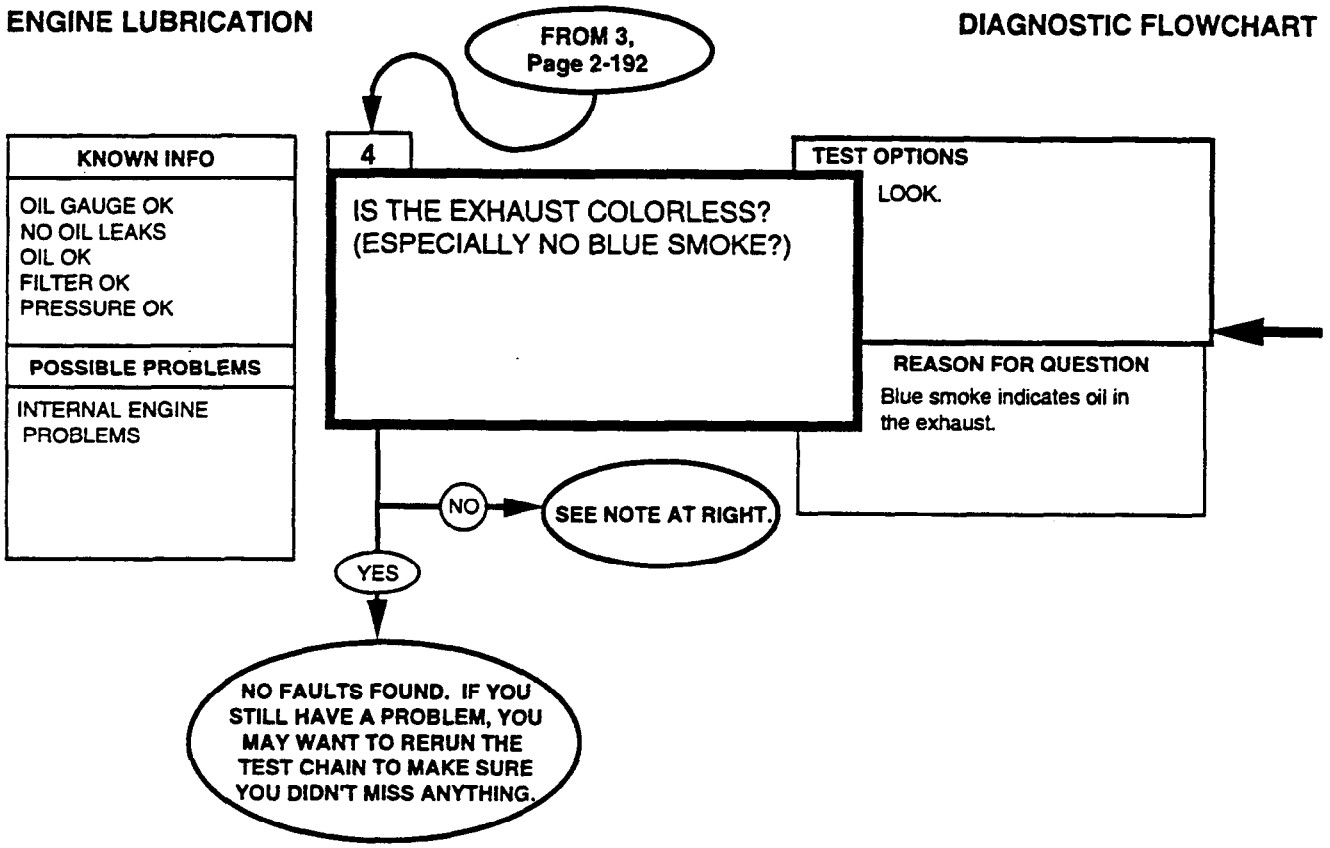

NOTE

If the exhaust is not colorless, it must be either white, blue, or black. If exhaust color is:

WHITE.....Go to fuel system, para. 2-28. Could be injector timing, DS level fault.

BLUE.....Blue smoke is a sign of oil entering the combustion chambers. It usually enters past the piston rings or intake valve stem seals. This is an internal engine problem that can't be handled at this level of maintenance. You may want to run the engine running tests, para. 2-24, before you notify DS maintenance (chapter 14).

BLACK..... Air intake/exhaust, para. 2-29.

ENGINE LUBRICATION

DIAGNOSTIC FLOWCHART

A
FROM 3,
Page 2-192

KNOWN INFO

WRONG OIL PRESSURE

POSSIBLE PROBLEMS

OIL PRESSURE GAUGE
OIL PRESSURE SENSOR
INTERNAL ENGINE PROBLEMS

A1

DID YOU USE THE VEHICLE'S ON-BOARD GAUGE TO MEASURE THE PRESSURE IN QUESTION 3?

TEST OPTIONS

NONE

REASON FOR QUESTION

If you used the STE/ICE-R to measure the pressure, then the engine has an internal fault.

NO → NOTIFY DS MAINTENANCE (CHAPTER 14).

YES ↓

KNOWN INFO

WRONG PRESSURE USING VEHICLE GAUGE

POSSIBLE PROBLEMS

GAUGE AND SENDER
ENGINE PROBLEMS

A2

MEASURE THE OIL PRESSURE DIRECTLY. IS IT CORRECT?

TEST OPTIONS

1. STE/ICE-R TEST 50 AND RPM INTERLEAVED (Page 2-495)
2. EXTERNAL GAUGE AND STE/ICE-R TEST 10 (Page 2-490)

REASON FOR QUESTION

Direct verification of the engine's oil pressure will tell you if the problem is in the gauge or the engine.

NO → NOTIFY DS MAINTENANCE (CHAPTER 14).

YES ↓

KNOWN INFO

OIL PRESSURE OK

POSSIBLE PROBLEMS

GAUGE
SENDER
WIRING

A3

THE PROBLEM IS IN THE OIL PRESSURE SENDING SYSTEM. GO TO INSTRUMENTS, Page 2-305.

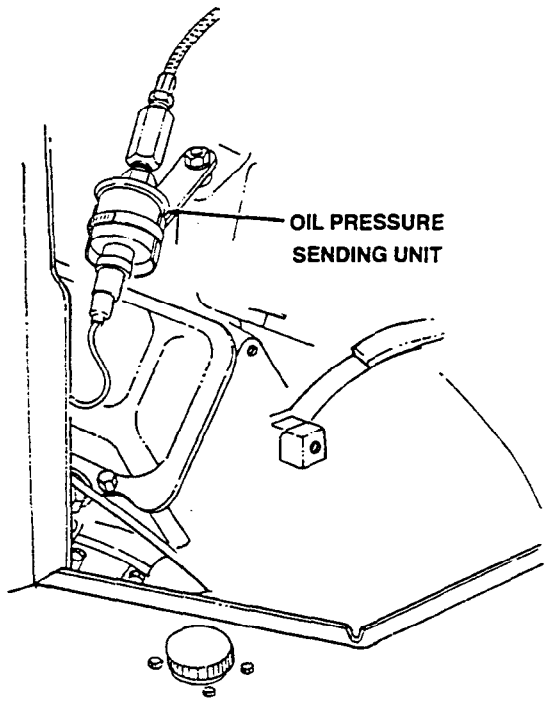

OIL PRESSURE CHART

ENGINE RPM	APPROXIMATE OIL PRESSURE
STOP	0 PSI (0 kPa)
IDLE (725 ± 25)	15-20 PSI (103-138 kPa)
2,000	40-50 PSI (276-345 kPa)

Remove sending unit (para. 4-29).

ENGINE RPM
INTERLEAVE WITH 0-1,000 PSI PRESSURE

1. Connect BLUE transducer in place of oil pressure sending unit. Dial test 50 (0-1000 psi (0-6,895 kPa)). Perform offset test.
2. Dial test 01, interleave with RPM. Dial test 50.
3. Start engine and observe display. VTM will display RPM, then PSI.

ENGINE RPM
STE/ICE-R TEST 10

1. Start Test 10, Engine RPM.
2. Crank or start the engine. Displayed reading is RPM. Cranking rpm should be approximately 200. Idle rpm should be 700-750.

2-33. ALTERNATOR TESTS

These alternator tests can be run any time you think there may be a problem with the alternator or battery charging or if you were sent here from another system chain.

These tests are NOT for the batteries. These tests are strictly for the alternator, its operation, and its associated wiring. Tests for the batteries are in Battery Circuit, Para. 2-35.

NOTE

Dual voltage 200 and 400 amp alternators can be installed in a single voltage system. See chart below for hookup procedures.

A simplified block diagram for the alternator system is given below. A detailed functional flow schematic is provided as foldout FP-11 to help you understand the system as you perform the tests.

After preliminary common tests, the model of alternator must be identified for specific testing to determine if alternator or regulator is defective.

ALTERNATOR FLOW SCHEMATIC

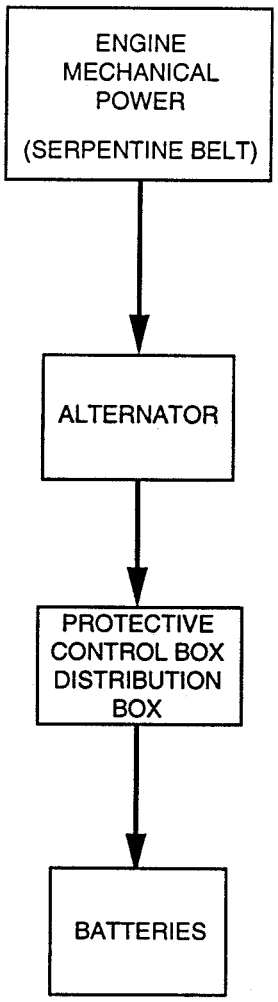

Adaption of dual voltage alternator on a single voltage system chart

Dual Voltage Alternator	Single Voltage System
200 Amp	Ground wire afixed to regulator base and 14 volt power stud
400 Amp	No ground wire afixed to regulator or 14 volt power stud

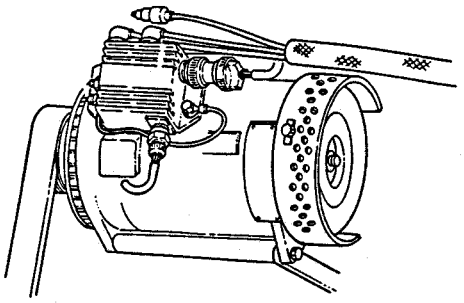

200-AMP DUAL VOLTAGE NIEHOFF ALTERNATOR/REGULATOR

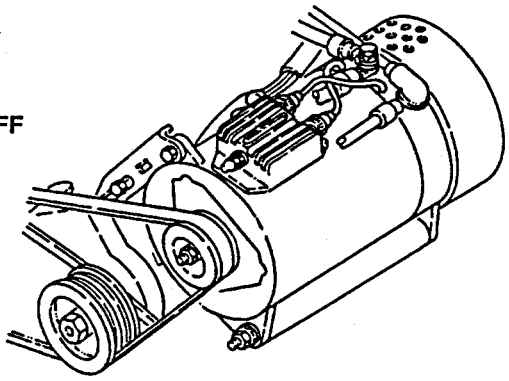

400-AMP DUAL VOLTAGE NIEHOFF ALTERNATOR/REGULATOR

ALTERNATOR

DIAGNOSTIC FLOWCHART

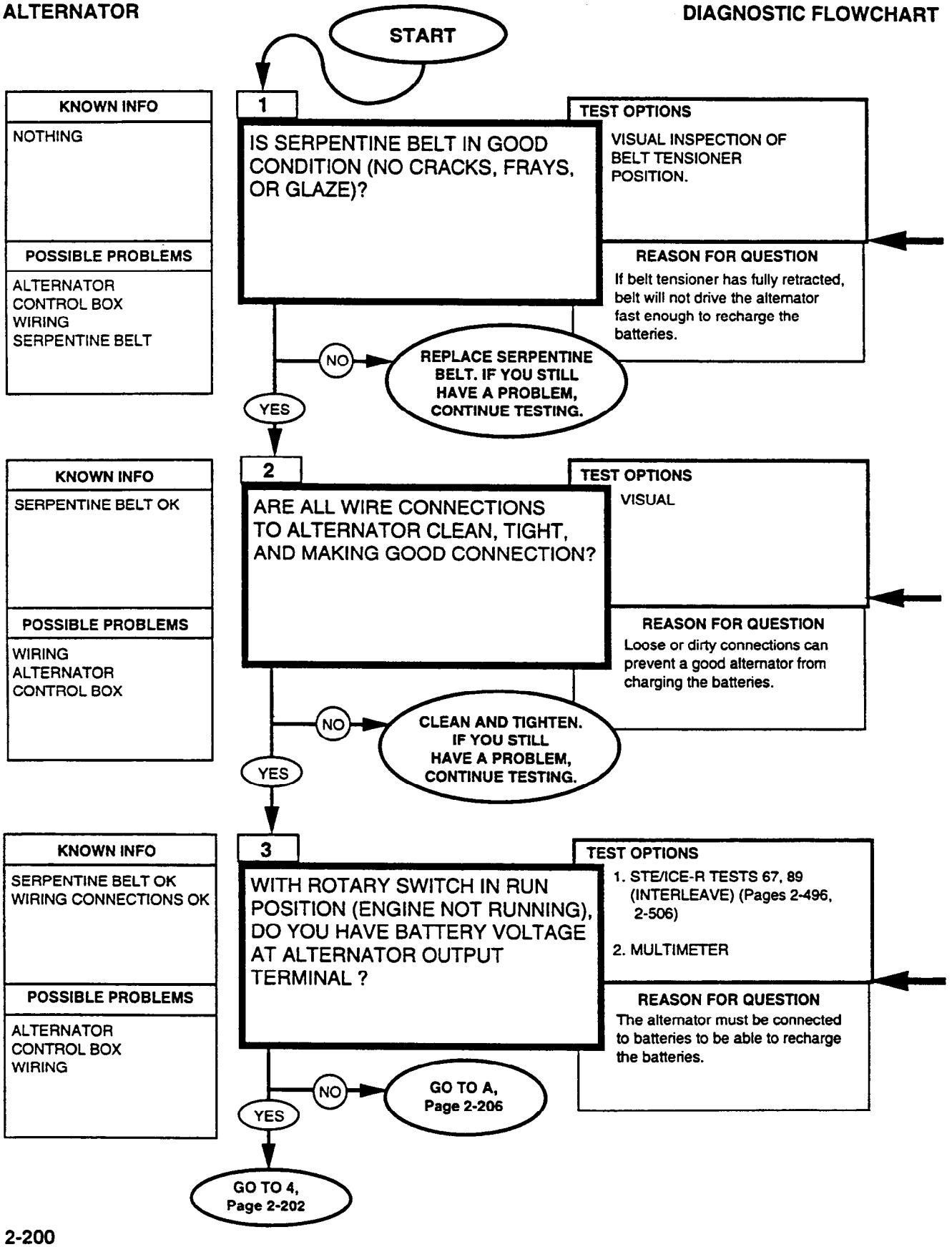

Replace serpentine belt (para. 3-81).

BAD CONNECTIONS ARE THE MOST COMMON PROBLEM !

Sometimes, just disconnecting, cleaning, and reconnecting will solve a problem. BE THOROUGH! The time you save may be your own.

Refer to the functional flow schematic and check the following:

1. BATTERY - make sure all connections are clean and tight, including the shunt and power stud.

2. STARTER - check the high current wire (heavy gauge wire 6A) at the starter. Don't just check for voltage; a loose connection will have voltage but can't carry much current.

3. PROTECTIVE CONTROL BOX

WARNING

Disconnect negative battery cable before disconnecting and reconnecting PCB harness.

WARNING

There is battery voltage at the PCB at all times. Failure to disconnect battery cable will result in damage to equipment or injury to personnel.

Remove BOTH connectors and look for bent or broken pins, pins pushed out of their socket, or dirt and corrosion in the connections.

INTERLEAVE TESTS 67 AND 89 BATTERY VOLTAGE AND DC VOLTAGE
USE CONTROL FUNCTION 06 TO INTERLEAVE TESTS ON THE STE/ICE-R. DIAL 06, PRESS THE TEST BUTTON. WHEN PROMPTED BY THE VTM, DIAL IN TEST 67 AND PRESS THE BUTTON. WHEN PROMPTED AGAIN, DIAL IN TEST 89 AND PRESS THE BUTTON. VTM WILL DISPLAY RESULT FOR TEST 67, THEN 89, THEN 6789, AND THEN REPEAT. SEE TM 9-4910-571-12&P FOR MORE INFORMATION.

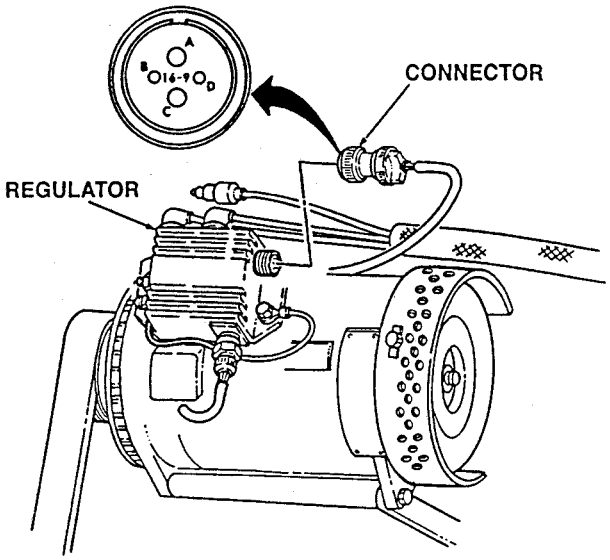

200-AMP DUAL VOLTAGE NIEHOFF ALTERNATOR

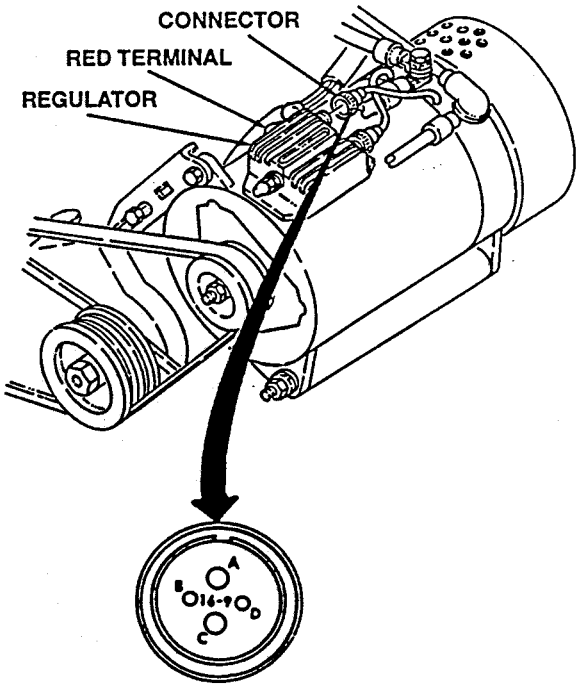

400-AMP DUAL VOLTAGE NIEHOFF ALTERNATOR

ALTERNATOR

DIAGNOSTIC FLOWCHART

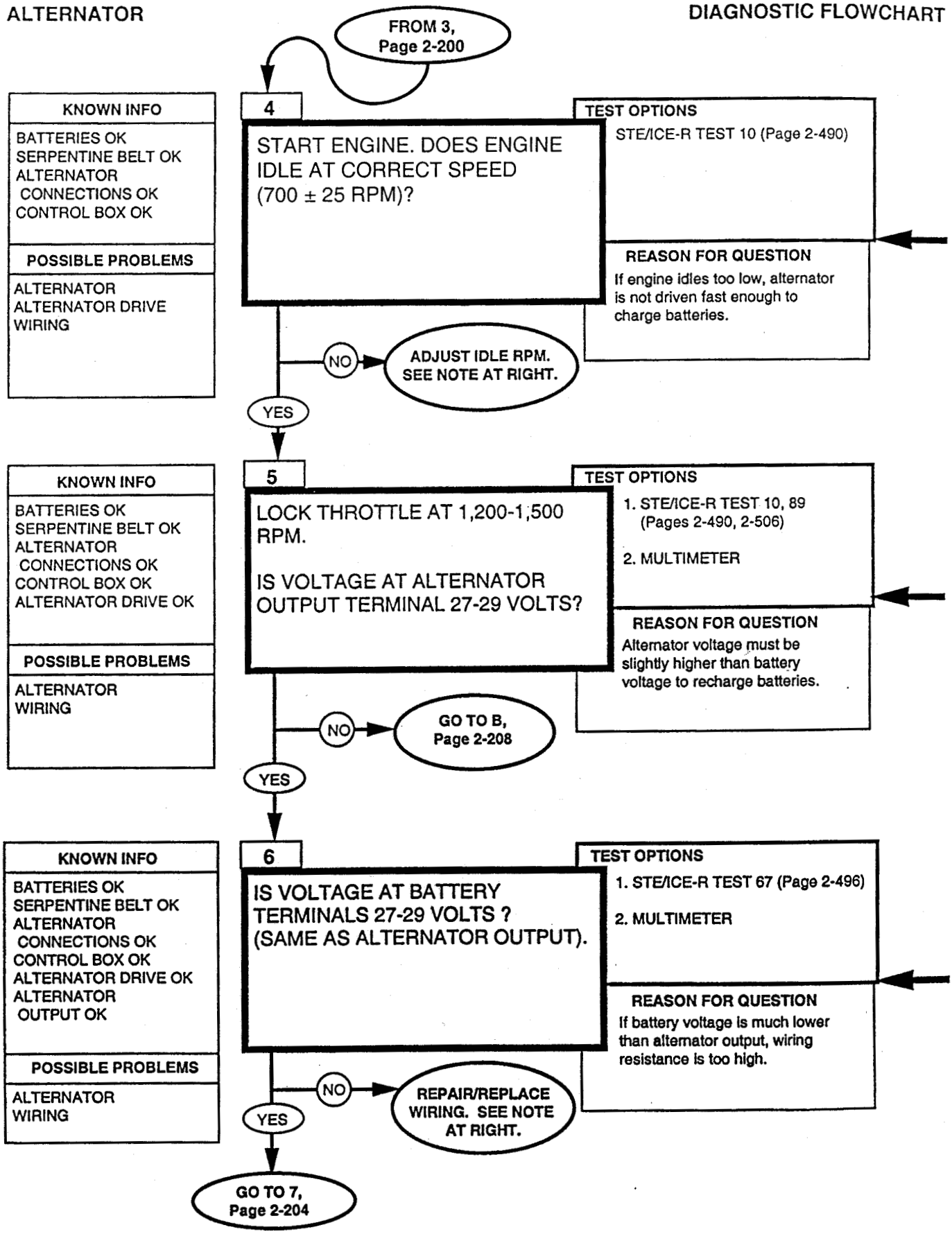

If the engine doesn't start on its own power, you should check the battery and starter circuits.

NOTE

A charged battery in good condition is a prerequisite for testing an alternator/regulator system. If battery is suspect, substitute a known good battery in the vehicle.

Alternators have a large stud on side of housing as output terminal to connect wire 6.

NOTES

Check the wiring and the pins at pins E & F at PCB engine connector.

Check the wiring and the pins at pins D & G at PCB body connector.

Check and clean starter solenoid and battery box power stud.

Check and clean battery cables and clamps.

Look for loose, dirty, or broken connections and repair as necessary. If terminal voltage is still low, harness should be replaced. Notify DS maintenance (chapter 18).

NOTES ON IDLE ADJUSTMENT

If idle can be adjusted to within limits, go to step 5.

If idle CANNOT be adjusted to within limits, you may have a problem with the fuel system. You can either continue here or run the fuel system tests and return here.

ENGINE RPM
STE/ICE-R TEST 10

1. Start Test 10, Engine RPM.
2. Crank or start the engine. Displayed reading is RPM. Cranking rpm should be at least 100. Idle rpm should be 625-675.

DC VOLTAGE 0-45 VOLTS
STE/ICE-R TEST 89

1. Connect RED clip to the indicated test point, BLACK clip to negative or ground.
2. Start Test 89, DC Volts.
3. Displayed reading is in volts.

BATTERY VOLTAGE
STE/ICE-R TEST 67

1. Start Test 67, Battery Voltage.
2. Displayed reading is in volts. Batteries should be 23-25.5 volts. Battery voltage will drop when glow plugs turn on.

ALTERNATOR

DIAGNOSTIC FLOWCHART

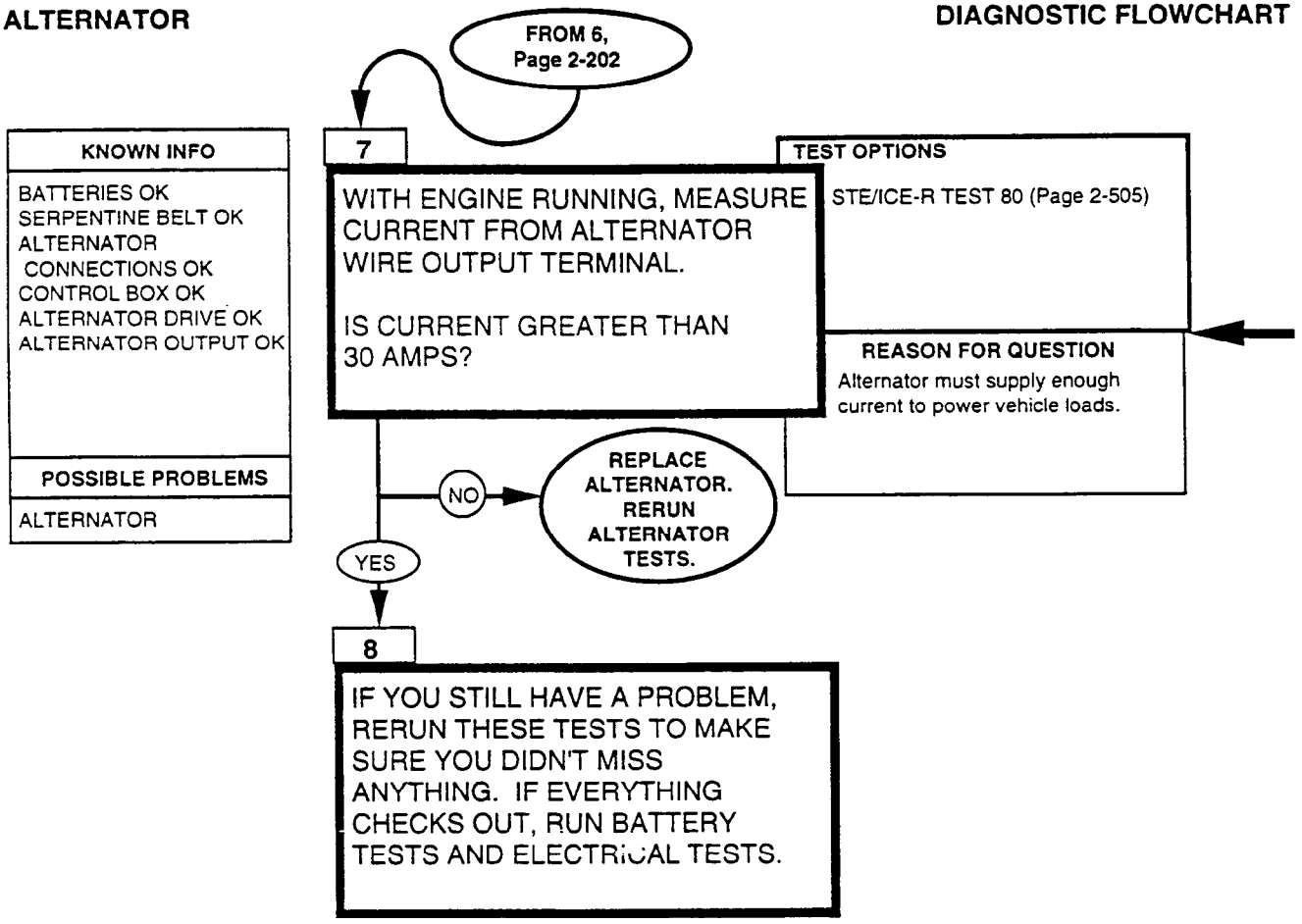

NOTE

All alternators have large stud on alternator case as output connector for wire 6. Alternator current will go up as you turn on vehicle accessories.

Turn on the lights, wipers, heater, etc., to make sure alternator can supply enough current to power the loads.

To replace alternator, refer to para. 4-5.

BATTERY CURRENT STE/ICE-R TEST 80
1. Start Test 80, Battery Current. 2. Displayed reading is in amps. The reading will be greater then 30 amps, depending on how many accessories you have on.

ALTERNATOR

DIAGNOSTIC FLOWCHART

A
FROM 3,
Page 2-200

A1

KNOWN INFO

BATTERY IS NOT CONNECTED TO ALTERNATOR WHEN ROTARY SWITCH IS IN RUN POSITION

POSSIBLE PROBLEMS

PCB
WIRING

IS THE STARTER MOTOR VOLTAGE THE SAME AS BATTERY VOLTAGE?

TEST OPTIONS

1. STE/ICE-R TESTS 67, 68 (Pages 2-496, 2-497)
2. MULTIMETER

REASON FOR QUESTION

The cable connecting the batteries to the alternator goes to the starter first.

NO → REPAIR/REPLACE WIRE 6A.

YES

!!

A2

KNOWN INFO

BATTERY IS NOT CONNECTED TO ALTERNATOR WHEN ROTARY SWITCH IS IN RUN POSITION, BATTERIES CONNECTED TO STARTER

POSSIBLE PROBLEMS

PCB
WIRING

DISCONNECT THE BATTERY NEGATIVE CABLE. DISCONNECT ENGINE CONNECTOR AT PCB. RECONNECT THE BATTERY NEGATIVE CABLE. IS THERE BATTERY VOLTAGE AT PIN E OF THE PCB ENGINE CONNECTOR HARNESS ?

TEST OPTIONS

1. STE/ICE-R TESTS 67, 89 (Pages 2-496, 2-506)
2. MULTIMETER

REASON FOR QUESTION

This checks the wire from the starter to the PCB engine connector.

NO → REPAIR/REPLACE WIRE 81A.

YES

A3

KNOWN INFO

BATTERY IS NOT CONNECTED TO ALTERNATOR WHEN ROTARY SWITCH IS IN RUN POSITION, BATTERIES CONNECTED TO STARTER

POSSIBLE PROBLEMS

PCB
WIRING

REMOVE THE BATTERY NEGATIVE CABLE. IS THERE CONTINUITY (LESS THAN 20 OHMS RESISTANCE) FROM PIN F OF PCB ENGINE CONNECTOR HARNESS TO WIRE 6 END AT ALTERNATOR?

TEST OPTIONS

1. STE/ICE-R TEST 91 (Page 2-508)
2. MULTIMETER

REASON FOR QUESTION

If the box is connected to the alternator, the relay in the PCB is no good.

NO → SEE NOTE ON RIGHT HAND PAGE.

YES → REPLACE PCB.

INTERLEAVE TEST 67 AND 68
BATTERY VOLTAGE AND DC VOLTAGE

USE CONTROL FUNCTION 06 TO INTERLEAVE TESTS ON THE STE/ICE-R. DIAL 06, PRESS THE TEST BUTTON. WHEN PROMPTED BY THE VTM, DIAL IN TEST 67 AND PRESS THE BUTTON. WHEN PROMPTED AGAIN, DIAL IN TEST 68 AND PRESS THE BUTTON. VTM WILL DISPLAY RESULT FOR TEST 67, THEN 68, THEN 6768, AND THEN REPEAT. SEE TM 9-4910-571-12&P FOR MORE INFORMATION.

WARNING

Disconnect negative battery cable before disconnecting and reconnecting PCB harness.

WARNING

There is battery voltage at the PCB at all times. Failure to disconnect battery cable will result in damage to equipment or injury to personnel.

INTERLEAVE TEST 67 AND 89
BATTERY VOLTAGE AND DC VOLTAGE

USE CONTROL FUNCTION 06 TO INTERLEAVE TESTS ON THE STE/ICE-R. DIAL 06, PRESS THE TEST BUTTON. WHEN PROMPTED BY THE VTM, DIAL IN TEST 67 AND PRESS THE BUTTON. WHEN PROMPTED AGAIN, DIAL IN TEST 89 AND PRESS THE BUTTON. VTM WILL DISPLAY RESULT FOR TEST 67, THEN 89, THEN 6789, AND THEN REPEAT. SEE TM 9-4910-571-12&P FOR MORE INFORMATION.

NOTE

When checking for voltage or continuity in a harness connector (steps A2 and A3), check the wiring at the connector carefully for broken wires. Check to see that the connector pins are not bent, broken, or pushed out of place. Check that the connections are clean and tight. Use the STE/ICE-R in TK mode for this measurement. DO NOT USE THE DCA. Leave the negative battery cable off for the measurement. If there is an open circuit, the STE/ICE-R will measure close to 500 ohms. If you don't have continuity or voltage, and the wires and connections are all OK, then the harness must have a broken wire. In this case, you have to replace the wiring harness. Replace harness and notify DS maintenance (chapter 18).

Replace PCB (para. 4-4).

RESISTANCE AND CONTINUITY
0-4,500 OHMS
STE/ICE-R TEST 91

1. Connect RED clip and BLACK clip to the terminations indicated in the question. RED to the first, BLACK to the second.
2. Start Test 91, 0-4,500 Ohms.
3. Displayed reading is in ohms. Less than 5 ohms is continuity. If the resistance is over 4,500 ohms, STE/ICE-R displays .9.9.9.9.

ALTERNATOR DIAGNOSTIC FLOWCHART

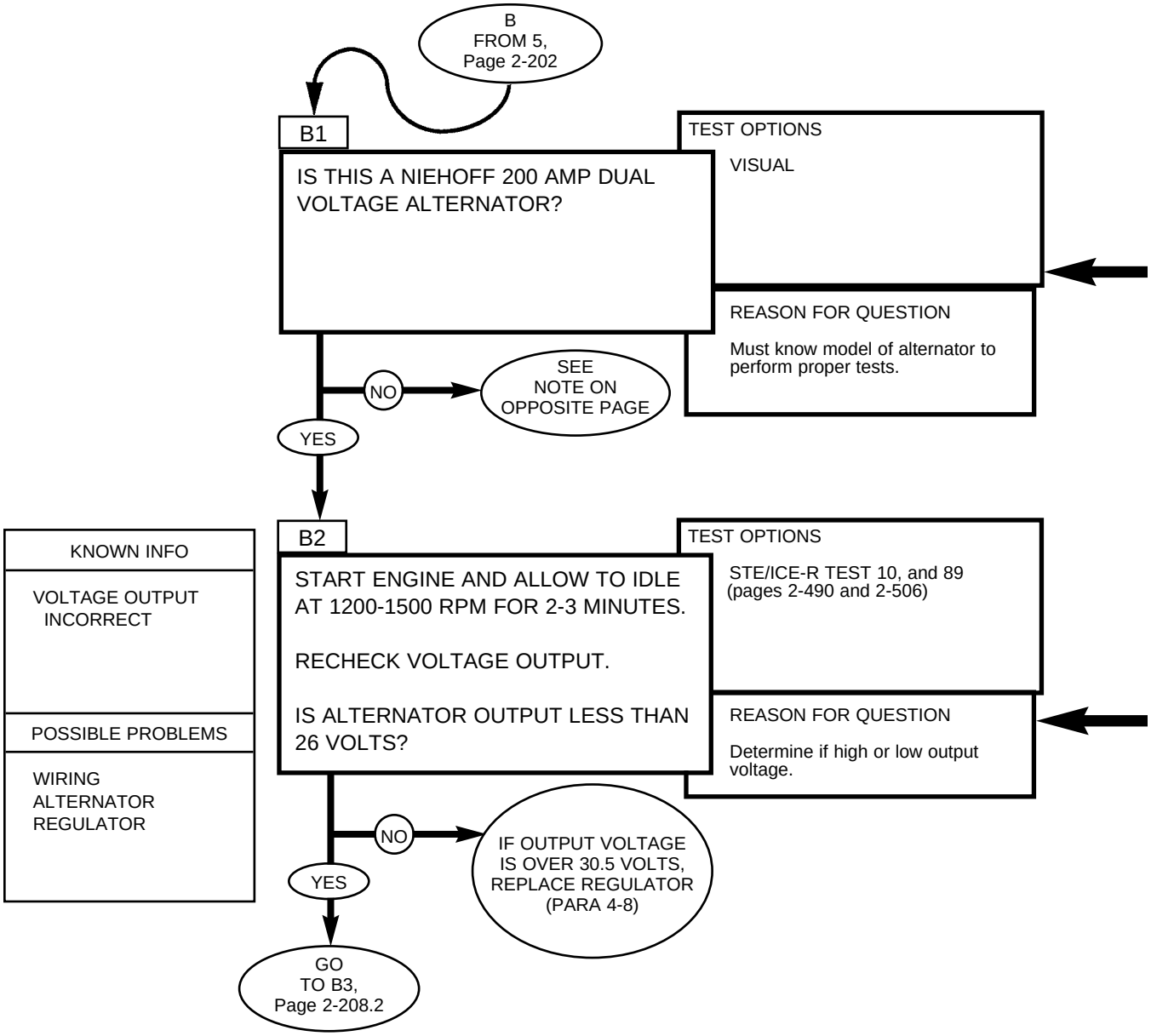

NOTE

For 200 amp dual voltage Niehoff alternator, continue with B. For 400 amp dual voltage Niehoff alternator, go to C, page 210.2.

NOTE

The regulator for this model alternator has overvoltage protection. Any output voltage over 30.5 volts is an overvoltage.

Output voltage of 26-30.5 is acceptable for this alternator.

NOTE

The regulator for this alternator has overvoltage protection. Any output voltage over 30.5 volts is an overvoltage.

Output voltage of 26-30.5 is acceptable for this alternator.

ENGINE RPM STE/ICE-R TEST 10
1. Start test 10, Engine RPM. 2. Crank or start the engine. Displayed reading is rpm. Engine rpm should be 1,200-1,500.

DC VOLTAGE 0-45 VOLTS STE/ICE-R TEST 89
1. Connect RED clip to the indicated test point, BLACK clip to negative or ground. 2. Start Test 89, DC Volts. 3. Displayed reading is in volts.

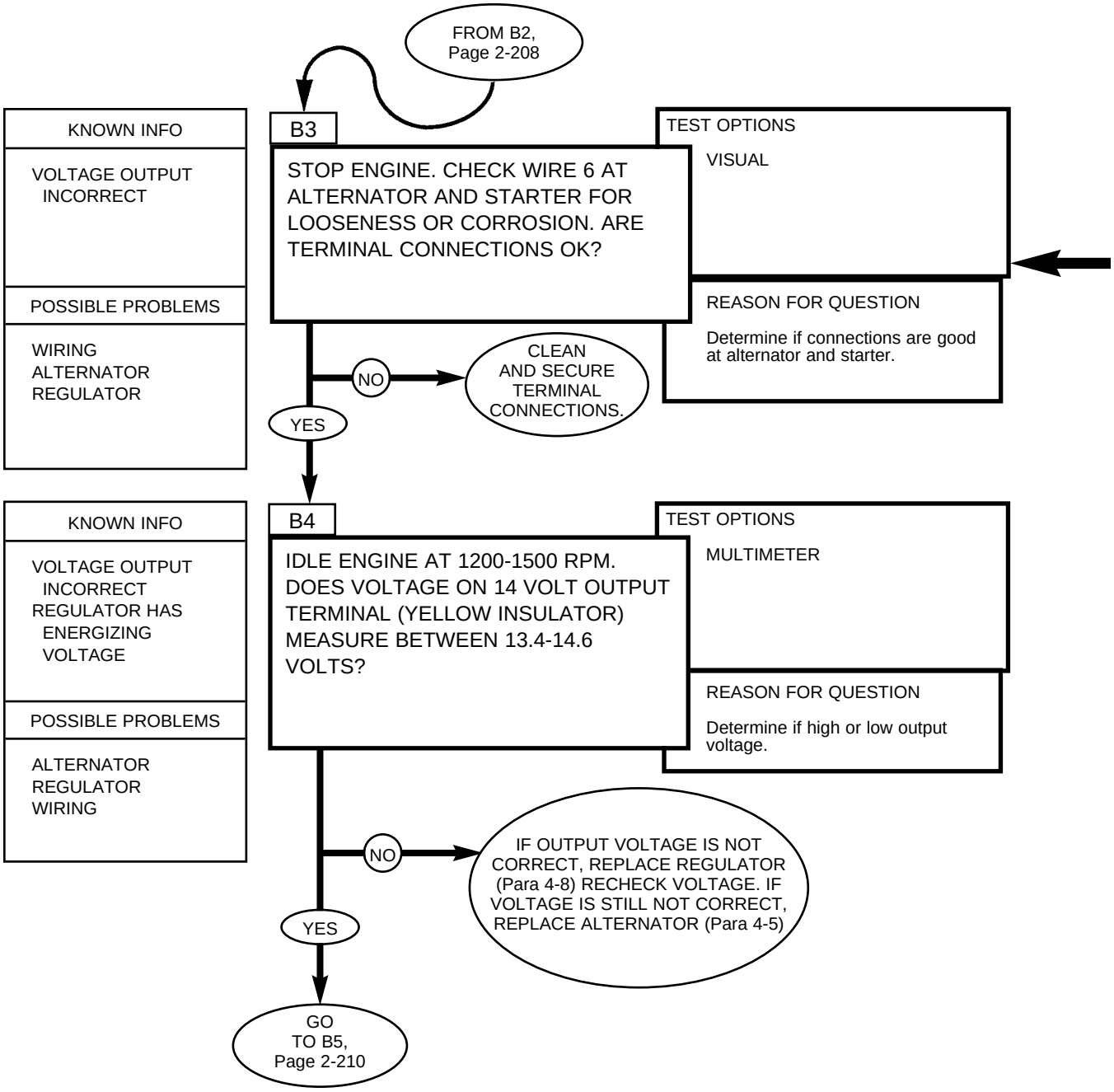
FROM B2, Page 2-208
KNOWN INFO
VOLTAGE OUTPUT INCORRECT
POSSIBLE PROBLEMS
WIRING
ALTERNATOR
REGULATOR
B3
STOP ENGINE. CHECK WIRE 6 AT ALTERNATOR AND STARTER FOR LOOSENESS OR CORROSION. ARE TERMINAL CONNECTIONS OK?
TEST OPTIONS
VISUAL
REASON FOR QUESTION
Determine if connections are good at alternator and starter.
NO
CLEAN AND SECURE TERMINAL CONNECTIONS.
YES
KNOWN INFO
VOLTAGE OUTPUT INCORRECT
REGULATOR HAS ENERGIZING VOLTAGE
POSSIBLE PROBLEMS
ALTERNATOR
REGULATOR
WIRING
B4
IDLE ENGINE AT 1200-1500 RPM. DOES VOLTAGE ON 14 VOLT OUTPUT TERMINAL (YELLOW INSULATOR) MEASURE BETWEEN 13.4-14.6 VOLTS?
TEST OPTIONS
MULTIMETER
REASON FOR QUESTION
Determine if high or low output voltage.
NO
IF OUTPUT VOLTAGE IS NOT CORRECT, REPLACE REGULATOR (Para 4-8) RECHECK VOLTAGE. IF VOLTAGE IS STILL NOT CORRECT, REPLACE ALTERNATOR (Para 4-5)
YES
GO TO B5, Page 2-210

NOTE

Wire 6 connects alternator output stud to starter terminal. A poor connection at these points will cause a low or no alternator output condition.

ALTERNATOR DIAGNOSTIC FLOWCHART

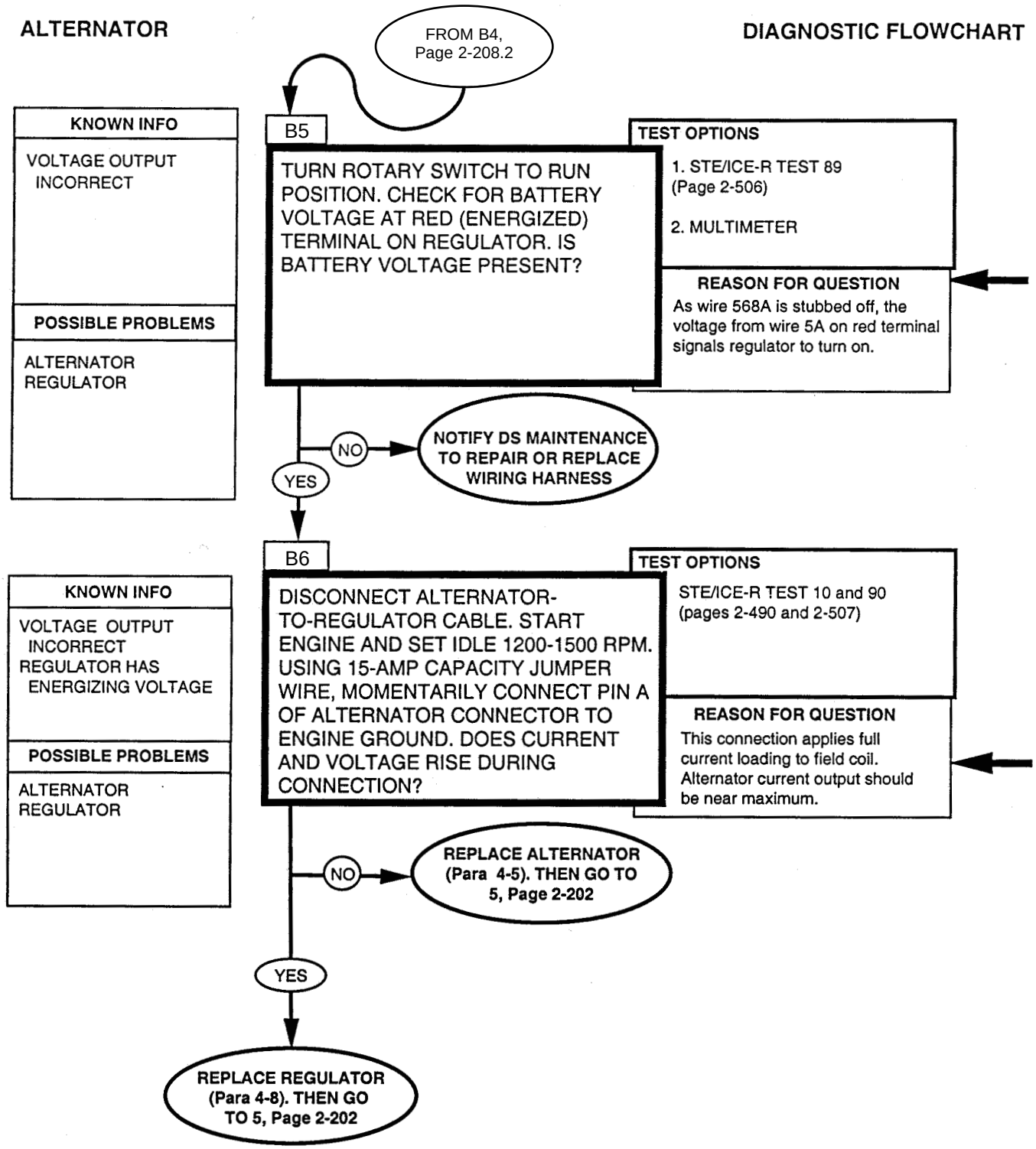

1. Slide boot back from wire lug to expose red terminal.
2. Make contact at stud.

0-45 DC VOLTS STE/ICE-R TEST 89
1. Connect RED clip to the indicated test point, BLACK clip to negative or ground. 2. Start Test 89, DC volts. 3. Displayed reading is in volts.

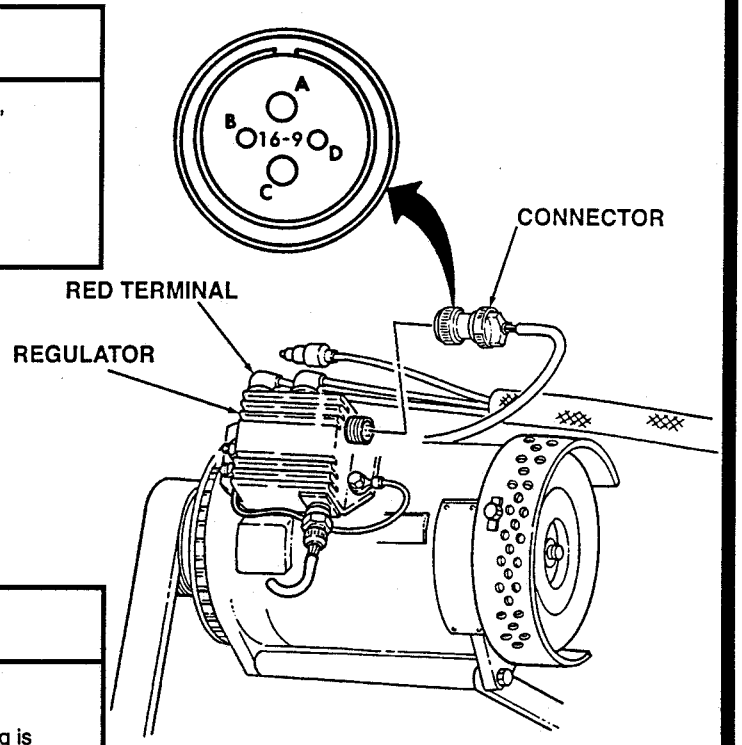

ENGINE RPM STE/ICE-R TEST 10
1. Start Test 10, Engine RPM. 2. Crank or start the engine. Displayed reading is RPM. Set engine to fast idle of 1200-1500 RPM.

0-1500 AMPS DC STE/ICE-R TEST 90
1. Connect probe. 2. Start Test 90, DC amps. 3. Displayed reading is in amps.

ALTERNATOR

DIAGNOSTIC FLOWCHART

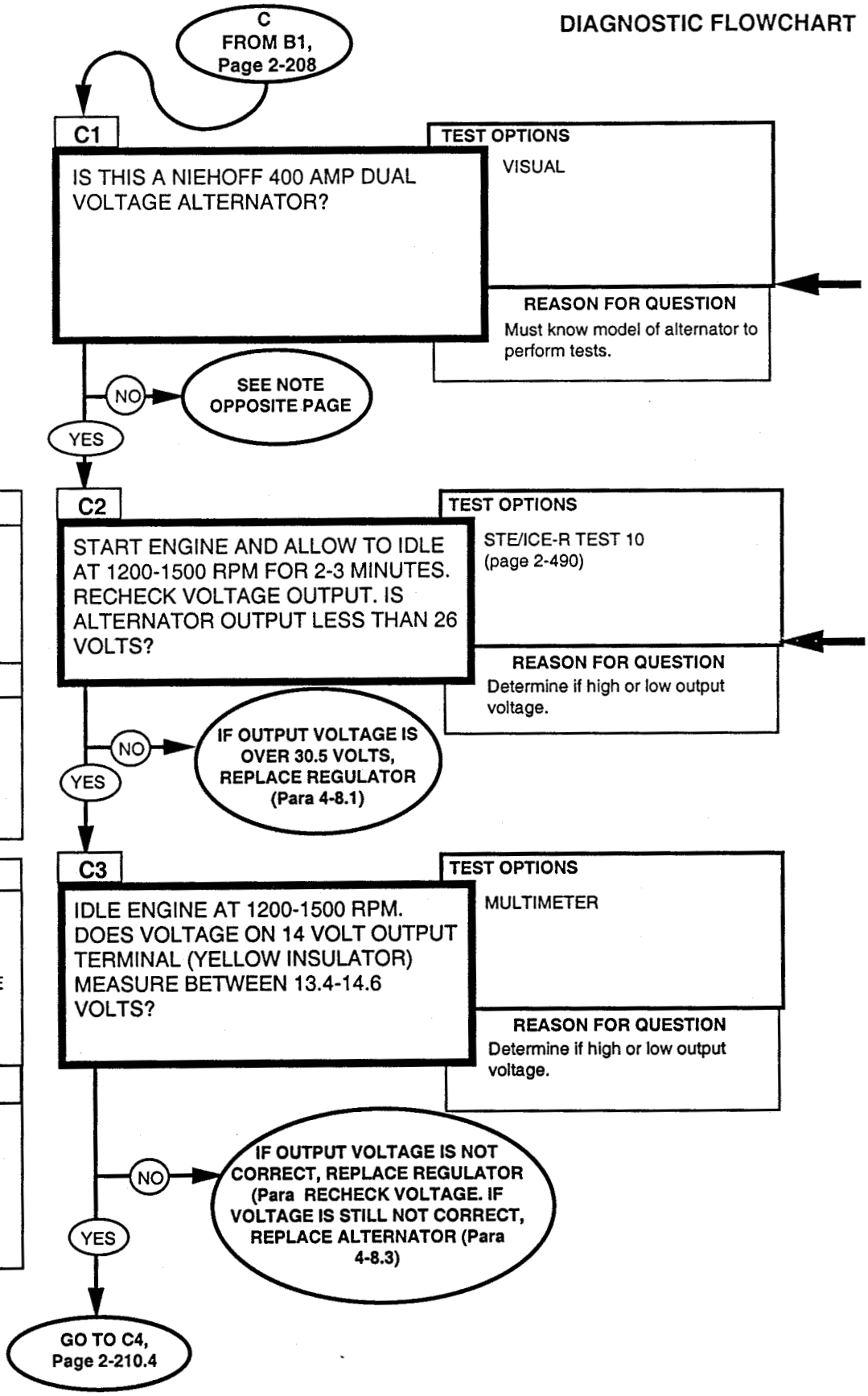

KNOWN INFO
VOLTAGE OUTPUT INCORRECT
POSSIBLE PROBLEMS
ALTERNATOR REGULATOR WIRING

KNOWN INFO
VOLTAGE OUTPUT INCORRECT REGULATOR HAS ENERGIZING VOLTAGE
POSSIBLE PROBLEMS
ALTERNATOR REGULATOR

NOTE

For 200 amp dual voltage Niehoff alternator, go to B, page 2-208.
For 400 amp dual voltage Niehoff alternator, continue with C.

NOTE

The regulator for this model alternator has overvoltage protection. Any output voltage over 30.5 volts is an overvoltage.

Output voltage of 26-30.5 is acceptable for this alternator.

ENGINE RPM
STE/ICE-R TEST 10

1. Start test 10, Engine RPM.
2. Crank or start the engine. Displayed reading is RPM. Engine RPM should be 1200-1500.

NOTE

The regulator for this alternator has overvoltage protection. Any output voltage over 30.5 volts is an overvoltage.

Output voltage of 26-30.5 is acceptable for this alternator.

0-45 DC VOLTS
STE/ICE-R TEST 89

1. Connect RED clip to the indicated test point, BLACK clip to negative or ground.
2. Start Test 89, DC Volts.
3. Displayed reading is in volts.

ALTERNATOR

DIAGNOSTIC FLOWCHART

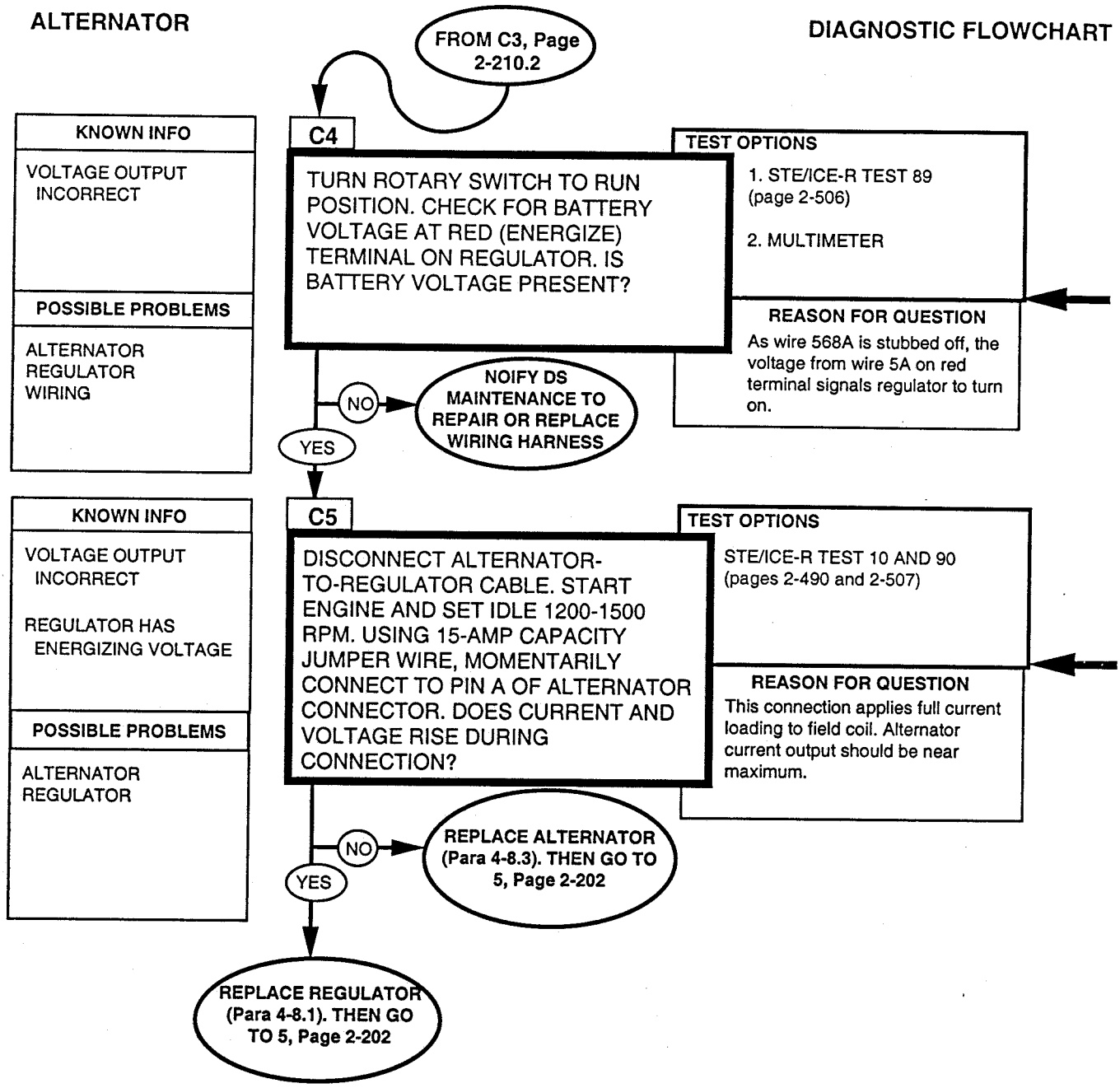

1. Slide boot back from wire lug to expose red terminal.
2. Make contact at stud.

0-45 DC VOLTS STE/ICE-R TEST 89
1. Connect RED clip to the indicated test point, BLACK clip to negative or ground. 2. Start Test 89, DC Volts. 3. Displayed reading is in volts.

ENGINE RPM STE/ICE-R TEST 10
1. Start Test 10, Engine RPM. 2. Crank or start the engine. Displayed reading is RPM. Set engine to fast idle of 1200-1500 RPM.

0-1500 AMPS DC STE/ICE-R TEST 90
1. Connect probe. 2. Start Test 90, DC amps. 3. Displayed reading is in amps.

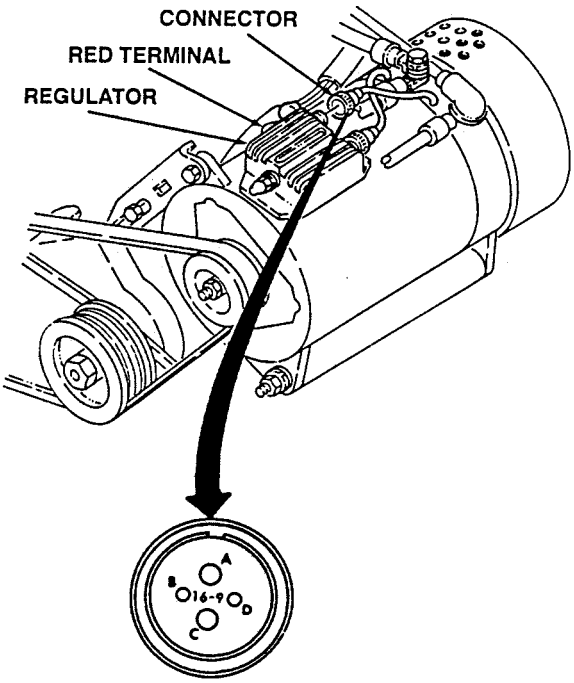

2-34. PROTECTIVE CONTROL BOX TESTS

These Protective Control Box tests can be run any time you think there may be a problem with the protective control box, or if you were sent here from another system chain.

NOTE

- To perform PCB diagnostics, a PCB test module is needed.
- For fabrication of PCB test module, refer to Appendix D, Figures 47-60.

PROTECTIVE CONTROL BOX

DIAGNOSTIC FLOWCHART

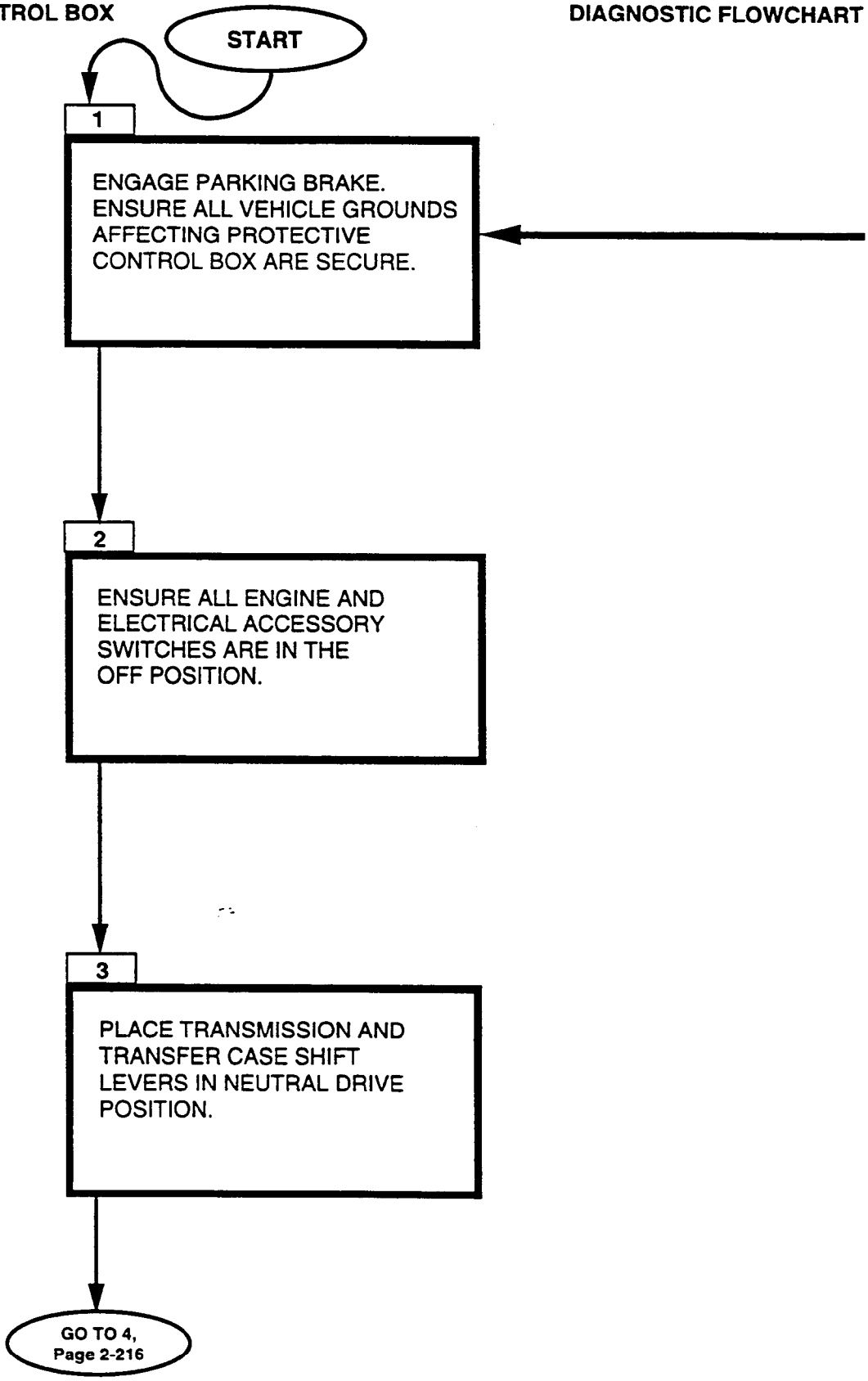

1. Remove instrument panel (para. 4-15).
2. Remove nut and lockwasher assembly and engine harness ground lead 3C from body. Remove nut and lockwasher assembly, capscrew, and harness ground leads 57A and 79A from body. Discard nut and lockwasher assemblies.
3. Inspect and clean wires and connection points.
4. Apply antiseize compound to harness ground leads 57A and 79A and install on body with capscrew and nut and lockwasher assembly. Apply antiseize compound to engine harness ground lead 3C and install on body with nut and lockwasher assembly.
5. Cover leads 3C, 57A, and 79A with RTV.
6. Install instrument panel (para. 4-15).

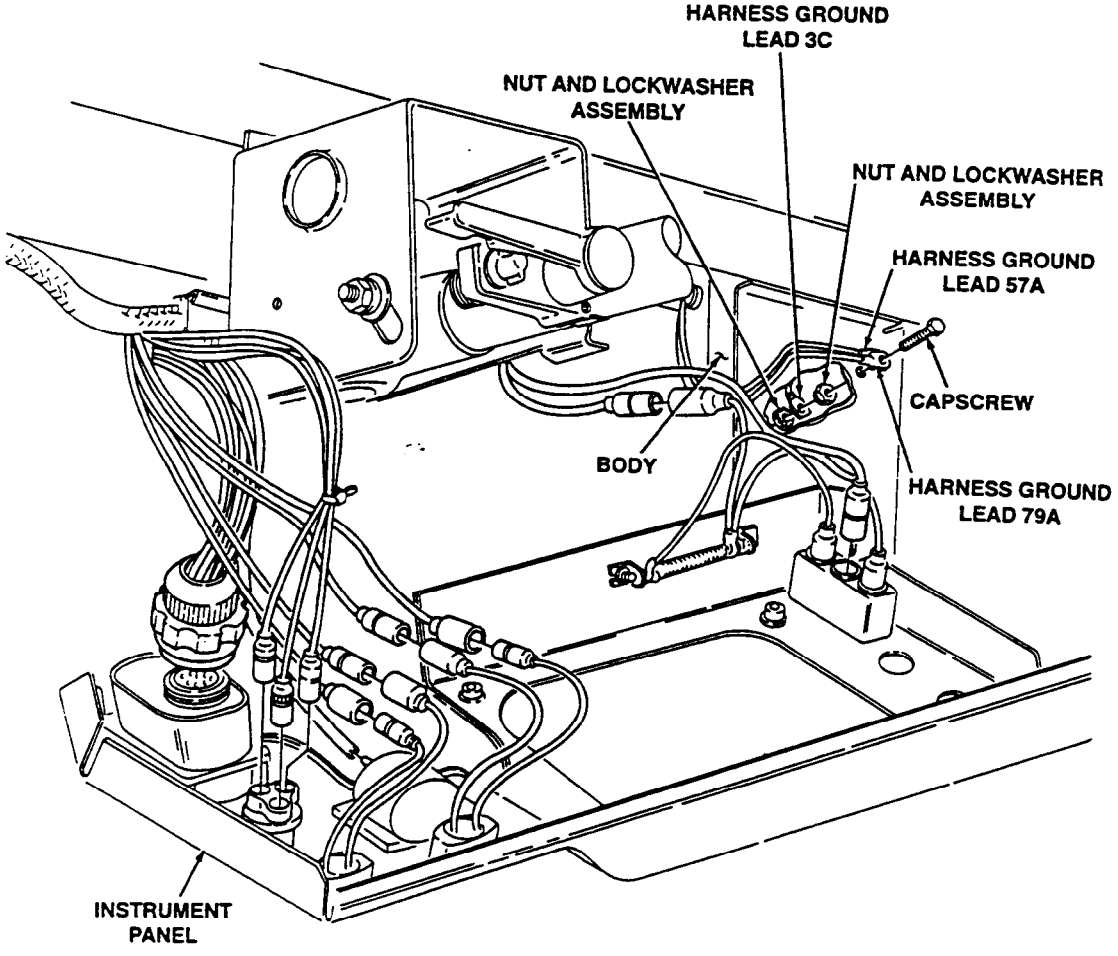

PROTECTIVE CONTROL BOX

DIAGNOSTIC FLOWCHART

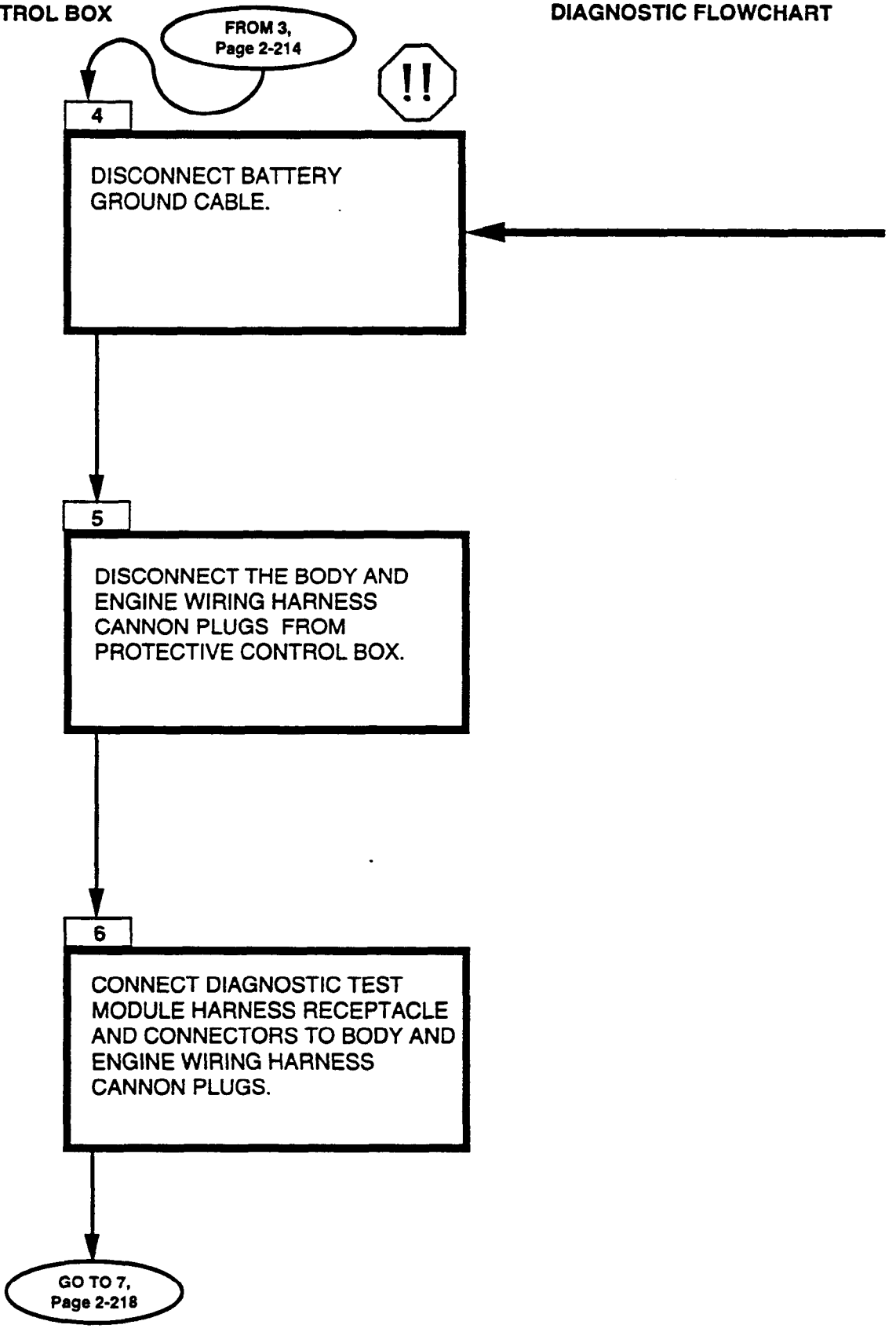

WARNING

Disconnect negative battery cable before disconnecting and reconnecting PCB harness. Failure to do so may result in injury to personnel or damage to equipment.

PROTECTIVE CONTROL BOX — DIAGNOSTIC FLOWCHART

FROM 6, Page 2-216

KNOWN INFO

NOTHING

POSSIBLE PROBLEMS

BATTERIES BAD
LEAD 57B BAD GROUND
PARKING BRAKE SWITCH BAD
BODY HARNESS WIRES BAD
GLOW PLUG CONTROLLER BAD
ALTERNATOR BAD
HARNESS WIRE 2A BAD
IGNITION SWITCH BAD
HARNESS WIRE 29A BAD
HARNESS WIRE 29C BAD
PROTECTIVE CONTROL BOX BAD

7

CONNECT BATTERY GROUND CABLE WITH IGNITION SWITCH IN THE OFF POSITION. ARE ANY LEDs ON? (REFER TO TABLE AT RIGHT.)

TEST OPTIONS

1. TRY IT.
2. VISUAL

REASON FOR QUESTION

If no LEDs are ON, that would indicate malfunctioning batteries.

NO → GO TO 1, Page 2-238

YES ↓

KNOWN INFO

BATTERIES OK

POSSIBLE PROBLEMS

LEAD 57B BAD GROUND
PARKING BRAKE SWITCH BAD
BODY HARNESS WIRES BAD
ALTERNATOR BAD
HARNESS WIRE 2A BAD
IGNITION SWITCH BAD
HARNESS WIRE 29A BAD
HARNESS WIRE 29C BAD
PROTECTIVE CONTROL BOX BAD

8

ARE LEDs 3 AND 4 ON?

TEST OPTIONS

VISUAL

REASON FOR QUESTION

If these LEDs are not ON, that would indicate PCB malfunctions.

!!

NO → REPLACE PROTECTIVE CONTROL BOX.

YES ↓

KNOWN INFO

BATTERIES OK

POSSIBLE PROBLEMS

LEAD 57B BAD GROUND
PARKING BRAKE SWITCH BAD
BODY HARNESS WIRES BAD
ALTERNATOR BAD
HARNESS WIRE 2A BAD
IGNITION SWITCH BAD
HARNESS WRE 29A BAD
HARNESS WIRE 29C BAD
PROTECTIVE CONTROL BOX BAD

9

IS LED 7 ON?

TEST OPTIONS

VISUAL

REASON FOR QUESTION

If this LED is not ON, that would indicate a bad connection to ground.

NO → REPAIR GROUND BODY HARNESS WIRE 57B.

YES ↓

GO TO 10, Page 2-220

REFERENCE INFORMATION

PROTECTIVE CONTROL BOX

IGNITION SWITCH POSITION	DIAGNOSTIC CHECKS (GO TASKS)
OFF	LEDs 1,3,4,6,7 - ON; Remaining LEDs OFF.
RUN	LEDs 1,2,3,4,5,6,7,8,11,13 - ON. LED 13 - OFF after a few seconds (glow plug warm-up time).
(ENGINE NOT RUNNING)	LED 13 - OFF (if engine is at operating temperature). LED 11 - CYCLING ON and OFF (glow plug controller operation). LEDs 9,10,12 - OFF. Release parking brake lever. LED 6 - OFF. Engage parking brake lever. LED 6 - ON.
START (ENGINE CRANKING)	LED 10 - Momentarily ON and then remains OFF (starter motor frequency lockout).
RUN (ENGINE RUNNING)	LEDs 1,2,3,4,5,6,7,8,9,12 - ON. LED 11 - cycling ON and OFF (glow plug controller operation): OFF time interval increases as engine warms up. LED 11 - OFF (when engine is at operating temperature). LED 11 may remain OFF (when engine is at operating temperature from previous run). LED 13 - OFF. Release parking brake lever. LED 6 - OFF. Engage parking brake lever. LED 6 - ON.

WARNING

Disconnect negative battery cable before disconnecting and reconnecting PCB harness. Failure to do so may result in injury to personnel or damage to equipment.

Replace PCB (para. 4-4).

Repair lead connectors (para. 4-80).
Repair lead (para. 4-80).

PROTECTIVE CONTROL BOX

DIAGNOSTIC FLOWCHART

FROM 9, Page 2-218

KNOWN INFO

BATTERIES OK
LEAD 57B GROUND OK

POSSIBLE PROBLEMS

PARKING BRAKE SWITCH BAD
BODY HARNESS WIRES BAD
GLOW PLUG CONTROLLER BAD
ALTERNATOR BAD
HARNESS WIRE 2A BAD
IGNITION SWITCH BAD
HARNESS WIRE 29A BAD
HARNESS WIRE 29C BAD
PROTECTIVE CONTROL BOX BAD

10

WITH THE IGNITION SWITCH IN RUN (ENGINE NOT RUNNING) POSITION, ARE ANY LEDs ON? (REFER TO TABLE AT RIGHT.)

TEST OPTIONS

1. TRY IT.
2. VISUAL

REASON FOR QUESTION

If no LEDs are ON, that would indicate malfunctioning batteries.

NO → GO TO 1, Page 2-238

YES ↓

KNOWN INFO

BATTERIES OK
LEAD 57B GROUND OK

POSSIBLE PROBLEMS

PARKING BRAKE SWITCH BAD
BODY HARNESS WIRES BAD
GLOW PLUG CONTROLLER BAD
ALTERNATOR BAD
HARNESS WIRE 2A BAD
IGNITION SWITCH BAD
HARNESS WIRE 29A BAD
HARNESS WIRE 29C BAD
PROTECTIVE CONTROL BOX BAD

11

IS LED 7 ON?

TEST OPTIONS

VISUAL

REASON FOR QUESTION

If these LEDs are not ON, that would indicate a bad connection to ground.

NO → REPAIR GROUND BODY HARNESS WIRE 57B.

YES ↓

KNOWN INFO

BATTERIES OK
LEAD 57B GROUND OK

POSSIBLE PROBLEMS

PARKING BRAKE SWITCH BAD
BODY HARNESS WIRES BAD
GLOW PLUG CONTROLLER BAD
ALTERNATOR BAD
HARNESS WIRE 2A BAD
IGNITION SWITCH BAD
HARNESS WIRE 29A BAD
HARNESS WIRE 29C BAD
PROTECTIVE CONTROL BOX BAD

12

ARE LEDs 2, 3, AND 4 ON?

TEST OPTIONS

VISUAL

REASON FOR QUESTION

If those LEDs are not ON, that would indicate a PCB malfunction.

NO → REPLACE PROTECTIVE CONTROL BOX.

YES ↓

GO TO 13, Page 2-222

REFERENCE INFORMATION

PROTECTIVE CONTROL BOX

IGNITION SWITCH POSITION	DIAGNOSTIC CHECKS (GO TASKS)
OFF	LEDs 1,3,4,6,7 - ON; Remaining LEDs OFF.
RUN	LEDs 1,2,3,4,5,6,7,8,11,13 - ON. LED 13 - OFF after a few seconds (glow plug warm-up time).
(ENGINE NOT RUNNING)	LED 13 - OFF (if engine is at operating temperature). LED 11 - CYCLING ON and OFF (glow plug controller operation). LEDs 9,10,12 - OFF. Release parking brake lever. LED 6 - OFF. Engage parking brake lever. LED 6 - ON.
START (ENGINE CRANKING)	LED 10 - Momentarily ON and then remains OFF (starter motor frequency lockout).
RUN (ENGINE RUNNING)	LEDs 1,2,3,4,5,6,7,8,9,12 - ON. LED 11 - cycling ON and OFF (glow plug controller operation): OFF time interval increases as engine warms up. LED 11 - OFF (when engine is at operating temperature). LED 11 may remain OFF (when engine is at operating temperature from previous run). LED 13 - OFF. Release parking brake lever. LED 6 - OFF. Engage parking brake lever. LED 6 - ON.

Repair lead connectors (para. 4-80).
Repair lead (para. 4-80).

WARNING

Disconnect negative battery cable before disconnecting and reconnecting PCB harness. Failure to do so may result in injury to personnel or damage to equipment.

Replace PCB (para. 4-4).

PROTECTIVE CONTROL BOX DIAGNOSTIC FLOWCHART

FROM 12, Page 2-220

KNOWN INFO

BATTERIES OK
LEAD 57B GROUND OK

POSSIBLE PROBLEMS

PARKING BRAKE SWITCH BAD
BODY HARNESS WIRES BAD
GLOW PLUG CONTROLLER BAD
ALTERNATOR BAD
HARNESS WIRE 2A BAD
IGNITION SWITCH BAD
HARNESS WIRE 29A BAD
HARNESS WIRE 29C BAD
PROTECTIVE CONTROL BOX BAD

13

IS LED 13 ON?
IF ENGINE IS AT OPERATING TEMPERATURE, LED 13 WILL NOT COME ON.

TEST OPTIONS

1. TRY IT.
2. VISUAL

REASON FOR QUESTION

If this LED is not ON, that would indicate either malfunctioning ignition switch, damaged harness wires 29A and 29C, or malfunctioning PCB.

NO → GO TO A, Page 2-234

YES ↓

KNOWN INFO

BATTERIES OK
LEAD 57B GROUND OK
IGNITION SWITCH OK
HARNESS WIRE 29A OK
HARNESS WIRE 29C OK

POSSIBLE PROBLEMS

PARKING BRAKE SWITCH BAD
BODY HARNESS WIRES BAD
GLOW PLUG CONTROLLER BAD
ALTERNATOR BAD
HARNESS WIRE 2A BAD
PROTECTIVE CONTROL BOX BAD

14

IS LED 5 ON?

TEST OPTIONS

VISUAL

REASON FOR QUESTION

If this LED is not ON, that would indicate PCB malfunctions.

!!

NO → REPLACE PROTECTIVE CONTROL BOX.

YES ↓

KNOWN INFO

BATTERIES OK
LEAD 57B GROUND OK
IGNITION SWITCH OK
HARNESS WIRE 29A OK
HARNESS WIRE 29C OK

POSSIBLE PROBLEMS

PARKING BRAKE SWITCH BAD
BODY HARNESS WIRES BAD
GLOW PLUG CONTROLLER BAD
ALTERNATOR BAD
HARNESS WIRE 2A BAD
PROTECTIVE CONTROL BOX BAD

15

IS LED 6 ON?

TEST OPTIONS

VISUAL

REASON FOR QUESTION

If this LED is not ON, that would indicate a parking brake switch malfunction or damage to body harness wires.

NO → REPLACE PARKING BRAKE SWITCH AND/ OR REPAIR WIRES IN BODY HARNESS.

YES ↓

GO TO 16, Page 2-224

WARNING

Disconnect negative battery cable before disconnecting and reconnecting PCB harness. Failure to do so may result in injury to personnel or damage to equipment.

Replace PCB (para. 4-4).

Repair lead connectors (para. 4-80).

Repair leads (para. 4-80).

PROTECTIVE CONTROL BOX

DIAGNOSTIC FLOWCHART

FROM 15, Page 2-222

KNOWN INFO

BATTERIES OK
LEAD 57B GROUND OK
IGNITION SWITCH OK
HARNESS WIRE 29A OK
HARNESS WIRE 29C OK
PARKING BRAKE SWITCH OK
BODY HARNESS WIRES OK

POSSIBLE PROBLEMS

GLOW PLUG CONTROLLER BAD
ALTERNATOR BAD
HARNESS WIRE 2A BAD
PROTECTIVE CONTROL BOX BAD

16

IS LED 8 ON?

TEST OPTIONS

1. TRY IT.
2. VISUAL

REASON FOR QUESTION

If this LED is not ON, that would indicate a PCB malfunction.

!!

NO → REPLACE PROTECTIVE CONTROL BOX.

YES ↓

KNOWN INFO

BATTERIES OK
LEAD 57B GROUND OK
IGNITION SWITCH OK
HARNESS WIRE 29A OK
HARNESS WIRE 29C OK
PARKING BRAKE SWITCH OK
BODY HARNESS WIRES OK

POSSIBLE PROBLEMS

GLOW PLUG CONTROLLER BAD
ALTERNATOR BAD
HARNESS WIRE 2A BAD
PROTECTIVE CONTROL BOX BAD

17

IS LED 11 ON?
DURING GLOW PLUG CYCLING, LED 11 MAY FLICKER.

TEST OPTIONS

VISUAL

REASON FOR QUESTION

If this LED is not ON, that would indicate a glow plug controller malfunction.

NO → GO TO D, Page 2-300

YES ↓

KNOWN INFO

BATTERIES OK
LEAD 57B GROUND OK
IGNITION SWITCH OK
HARNESS WIRE 29A OK
HARNESS WIRE 29C OK
PARKING BRAKE SWITCH OK
BODY HARNESS WIRES OK
GLOW PLUG CONTROLLER OK

POSSIBLE PROBLEMS

ALTERNATOR BAD
HARNESS WIRE 2A BAD
PROTECTIVE CONTROL BOX BAD

18

WITH THE IGNITION SWITCH IN THE START (ENGINE CRANKING) POSITION, DO LEDs 11 AND 13 GO OUT, AND DOES ENGINE CRANK?

TEST OPTIONS

1. TRY IT.
2. VISUAL

REASON FOR QUESTION

If these LEDs do not go ON, that would indicate malfunctioning batteries.

NO → CHECK BATTERY VOLTAGE AND CHARGE IF NEEDED.

YES ↓

GO TO 19, Page 2-226

WARNING

Disconnect negative battery cable before disconnecting and reconnecting PCB harness. Failure to do so may result in injury to personnel or damage to equipment.

Replace PCB (para. 4-4).

PROTECTIVE CONTROL BOX — DIAGNOSTIC FLOWCHART

FROM 18, Page 2-224

KNOWN INFO

BATTERIES OK
LEAD 57B GROUND OK
IGNITION SWITCH OK
HARNESS WIRE 29A OK
HARNESS WIRE 29C OK
PARKING BRAKE SWITCH OK
BODY HARNESS WIRES OK

POSSIBLE PROBLEMS

ALTERNATOR BAD
HARNESS WIRE 2A BAD
PROTECTIVE CONTROL BOX BAD

19

DOES LED 10 MOMENTARILY COME ON THEN STAY OFF?

TEST OPTIONS

VISUAL

REASON FOR QUESTION

If this LED is not ON, that would indicate a PCB malfunction.

!!

NO → REPLACE PROTECTIVE CONTROL BOX.

YES

KNOWN INFO

BATTERIES OK
LEAD 57B GROUND OK
IGNITION SWITCH OK
HARNESS WIRE 29A OK
HARNESS WIRE 29C OK
PARKING BRAKE SWITCH OK
BODY HARNESS WIRES OK

POSSIBLE PROBLEMS

ALTERNATOR BAD
HARNESS WIRE 2A BAD
PROTECTIVE CONTROL BOX BAD

20

WITH THE IGNITION SWITCH IN THE RUN (ENGINE RUNNING) POSITION, ARE LEDs 2, 3, 4, 5, AND 8 ON?

TEST OPTIONS

1. TRY IT.
2. VISUAL

REASON FOR QUESTION

If these LEDs are not ON, that would indicate a PCB malfunction.

!!

NO → REPLACE PROTECTIVE CONTROL BOX.

YES

KNOWN INFO

BATTERIES OK
IGNITION SWITCH OK
HARNESS WIRE 29A OK
HARNESS WIRE 29C OK
PARKING BRAKE SWITCH OK
BODY HARNESS WIRES OK

POSSIBLE PROBLEMS

ALTERNATOR BAD
LEAD 57B GROUND BAD
HARNESS WIRE 2A BAD
PROTECTIVE CONTROL BOX BAD

21

IS LED 7 ON?

TEST OPTIONS

VISUAL

REASON FOR QUESTION

If this LED is not ON, that would indicate a bad connection to ground.

NO → REPAIR GROUND BODY HARNESS WIRE 57B.

YES

GO TO 22, Page 2-228

WARNING

Disconnect negative battery cable before disconnecting and reconnecting PCB harness. Failure to do so may result in injury to personnel or damage to equipment.

Replace PCB (para. 4-4).

WARNING

Disconnect negative battery cable before disconnecting and reconnecting PCB harness. Failure to do so may result in injury to personnel or damage to equipment.

Replace PCB (para. 4-4).

Repair lead connectors (para. 4-80).

Repair leads (para. 4-80).

PROTECTIVE CONTROL BOX

DIAGNOSTIC FLOWCHART

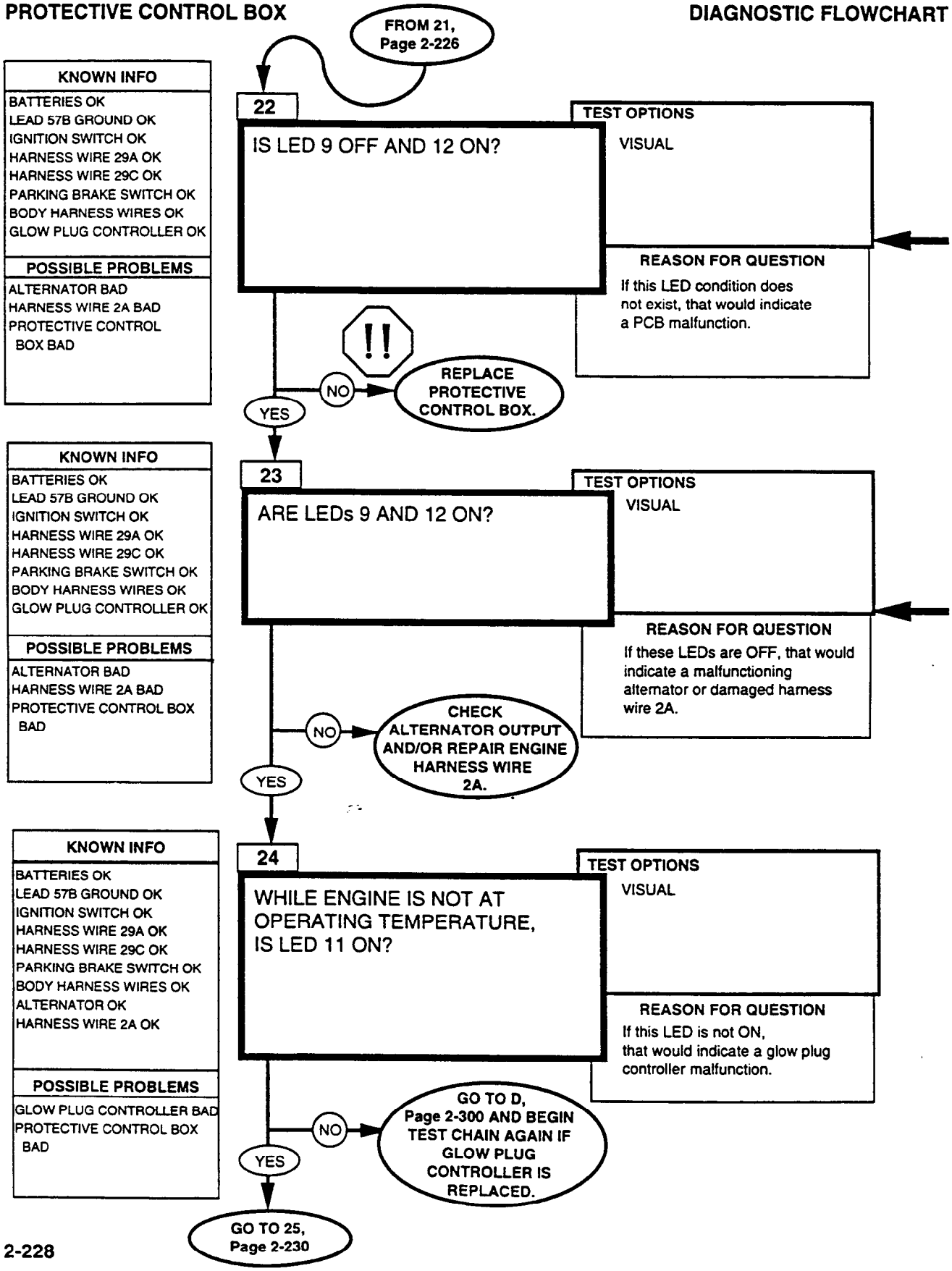

WARNING

Disconnect negative battery cable before disconnecting and reconnecting PCB harness. Failure to do so may result in injury to personnel or damage to equipment.

Replace PCB (para. 4-4).

Repair lead connectors (para. 4-80).
Repair leads (para. 4-80).

PROTECTIVE CONTROL BOX

DIAGNOSTIC FLOWCHART

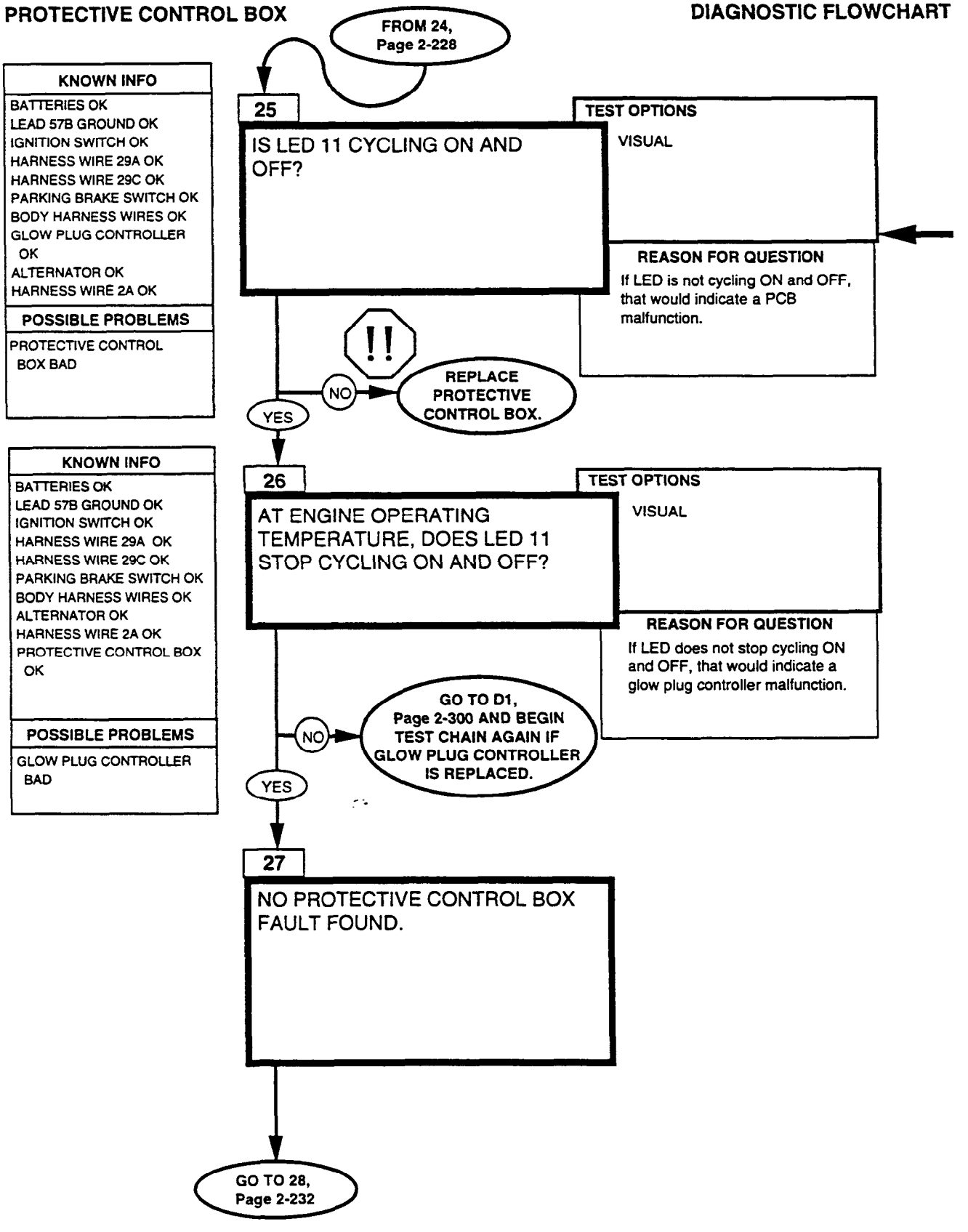

WARNING

Disconnect negative battery cable before disconnecting and reconnecting PCB harness. Failure to do so may result in injury to personnel or damage to equipment.

Replace PCB (para. 4-4).

PROTECTIVE CONTROL BOX

DIAGNOSTIC FLOWCHART

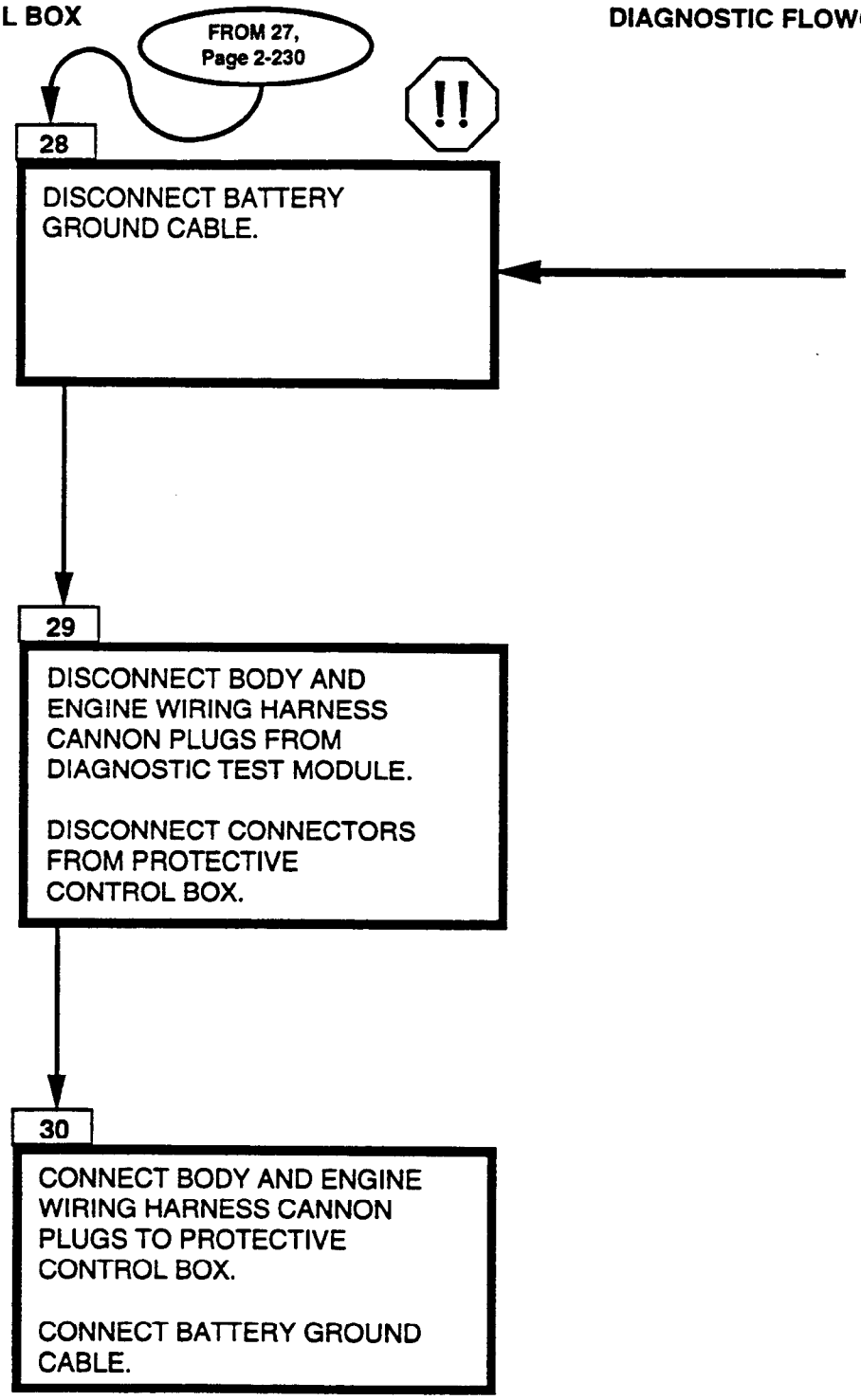

WARNING

Disconnect negative battery cable before disconnecting and reconnecting PCB harness. Failure to do so may result in injury to personnel or damage to equipment.

PROTECTIVE CONTROL BOX **DIAGNOSTIC FLOWCHART**

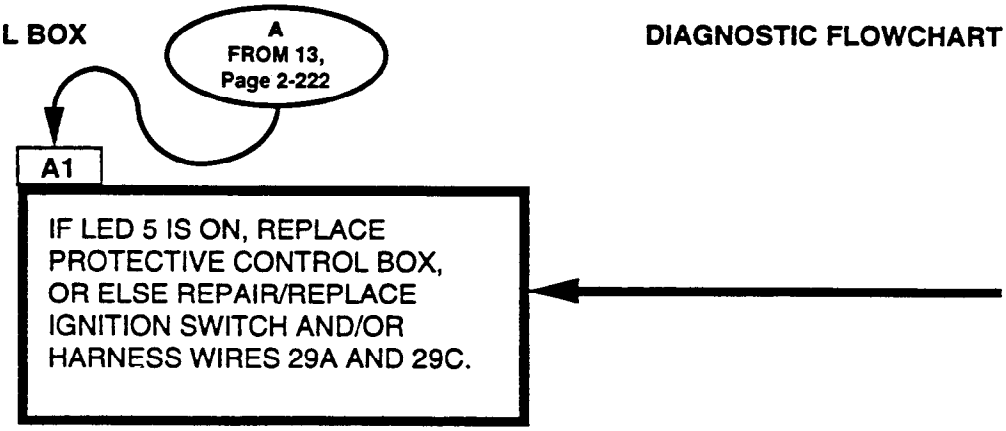

Replace PCB (para. 4-4).
Repair/replace rotary switch (para. 4-10).
Repair/replace leads 29A and 29C (para. 4-80).

2-35. BATTERY CIRCUIT TESTS

These battery circuit tests may be run any time you think you have a battery problem of if you were sent here by another test chain. Just follow the path, answering the questions. Additional information and notes are given on the facing page when necessary.

The fold-out page shows the location of the major components of the battery circuit in case you are not familiar with them. Fold-out page FP-13 may be left open for reference while testing.

BATTERY CIRCUIT

DIAGNOSTIC FLOWCHART

START

1

KNOWN INFO

NOTHING

POSSIBLE PROBLEMS

BATTERIES
CABLES
ALTERNATOR CIRCUIT
CABLE CONNECTIONS

ARE ALL BATTERY CONNECTIONS CLEAN AND TIGHT ?

TEST OPTIONS

VISUAL

REASON FOR QUESTION

A loose or dirty connection can make good batteries look bad and may not allow current to flow.

NO → **CLEAN AND TIGHTEN ALL CONNECTIONS.**

YES

2

KNOWN INFO

CONNECTIONS OK

POSSIBLE PROBLEMS

BATTERIES
CABLES
ALTERNATOR CIRCUIT

ARE THE BATTERIES FILLED TO THE PROPER LEVEL ?

TEST OPTIONS

VISUAL

REASON FOR QUESTION

Batteries need water for the electrolyte solution. Batteries don't work right if the electrolyte level is low.

NO → **ADD WATER TO PROPER LEVEL.**

YES

3

KNOWN INFO

CONNECTIONS OK
WATER LEVEL OK

POSSIBLE PROBLEMS

BATTERIES
CABLES
ALTERNATOR CIRCUIT

IS BATTERY VOLTAGE 23.5-25.5 VOLTS ?

TEST OPTIONS

1. STE/ICE-R TEST 67 (Page 2-496)
2. MULTIMETER

REASON FOR QUESTION

If the battery voltage is not correct, you may have bad batteries or a problem in the alternator circuit.

NO → **GO TO A, Page 2-242**

YES → **GO TO 4, Page 2-240**

BAD CONNECTIONS ARE THE MOST COMMON PROBLEM !

Sometimes just disconnecting, cleaning, and reconnecting will solve a problem. BE THOROUGH ! The time you save may be your own.

Refer to the functional flow schematic and check the following:

1. BATTERY - make sure all connections are clean and tight. This includes the interconnect cables, clamps, shunt, power stud, and the slave connector. Also check wires 6A and 7A under vehicle where they enter shunt.

2. STARTER - check the high current (heavy gauge) wire at the starter. Don't just check for voltage; a loose connection will have voltage but can't carry much current.

There is a ring inside the battery fill plugs. The water level should be at the ring.

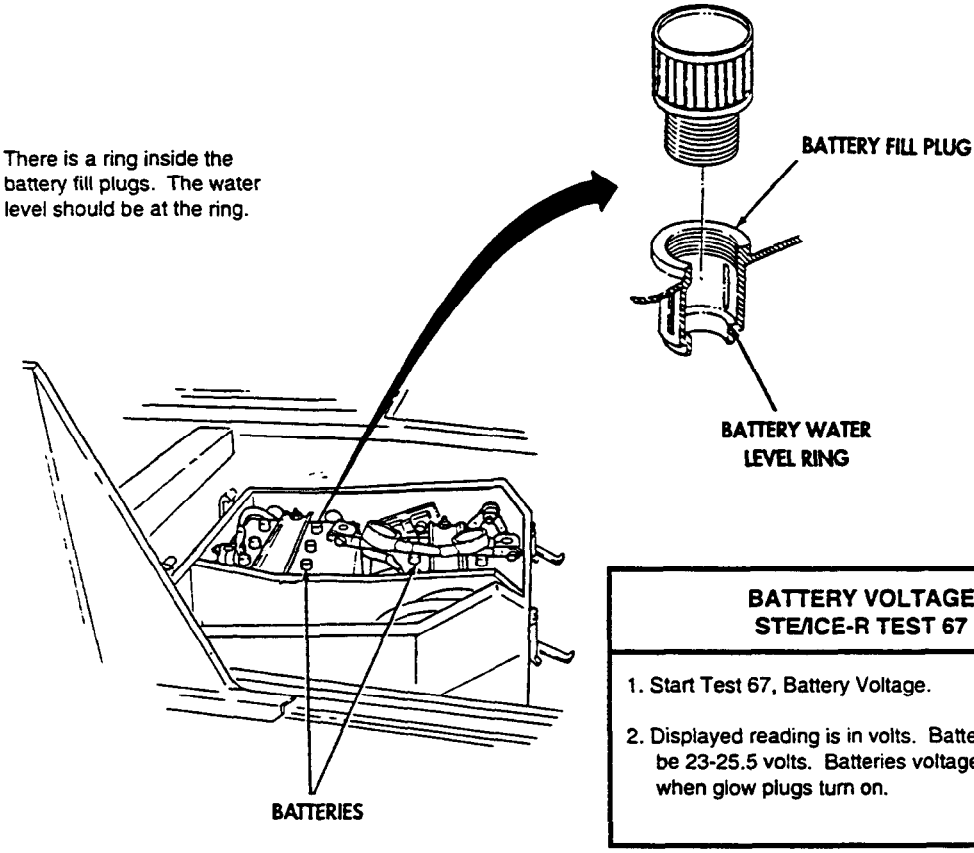

BATTERY VOLTAGE STE/ICE-R TEST 67
1. Start Test 67, Battery Voltage. 2. Displayed reading is in volts. Batteries should be 23-25.5 volts. Batteries voltage will drop when glow plugs turn on.

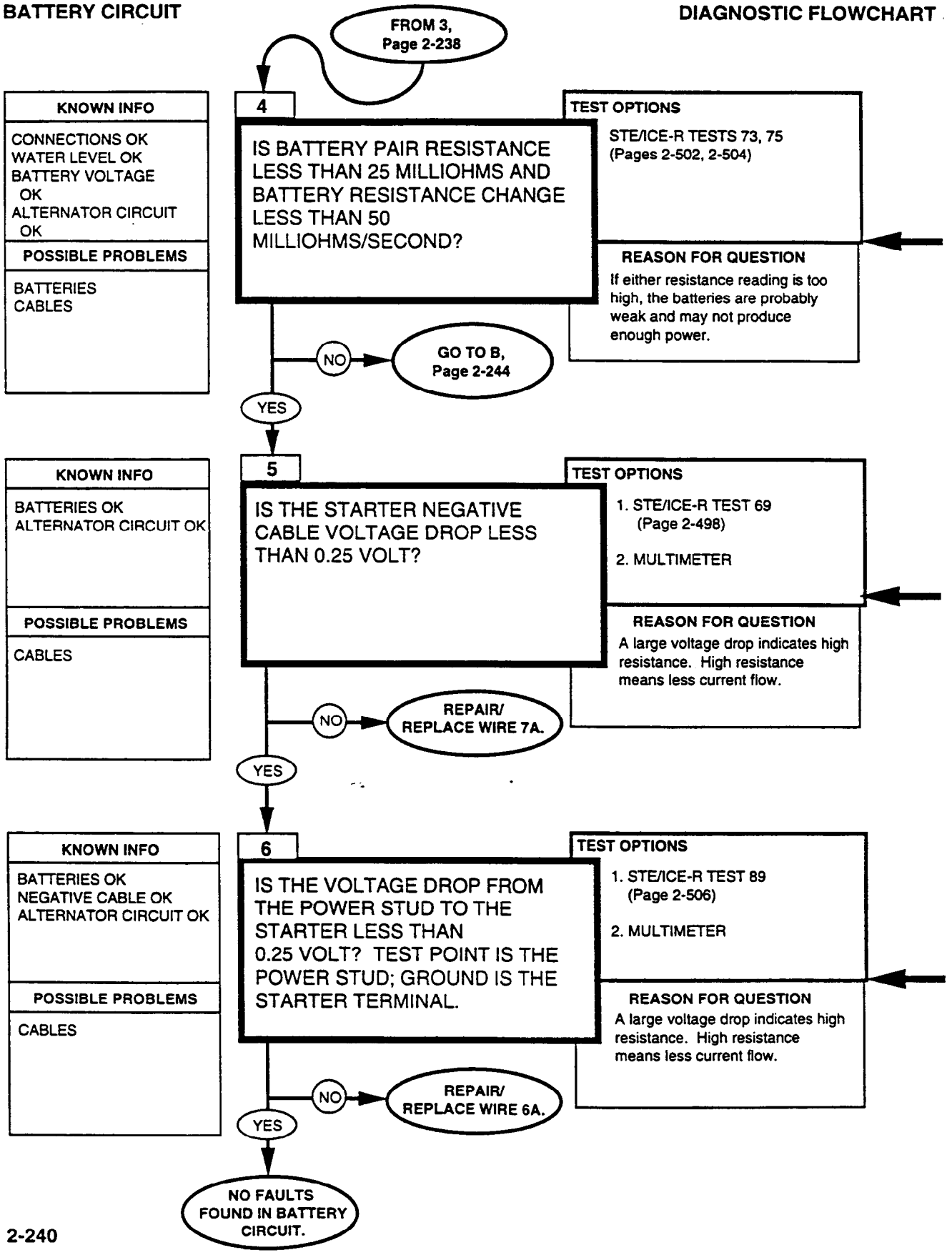
FROM 3, Page 2-238
4
KNOWN INFO
CONNECTIONS OK
WATER LEVEL OK
BATTERY VOLTAGE OK
ALTERNATOR CIRCUIT OK
POSSIBLE PROBLEMS
BATTERIES
CABLES
IS BATTERY PAIR RESISTANCE LESS THAN 25 MILLIOHMS AND BATTERY RESISTANCE CHANGE LESS THAN 50 MILLIOHMS/SECOND?
TEST OPTIONS
STE/ICE-R TESTS 73, 75 (Pages 2-502, 2-504)
REASON FOR QUESTION
If either resistance reading is too high, the batteries are probably weak and may not produce enough power.
NO
GO TO B, Page 2-244
YES
5
KNOWN INFO
BATTERIES OK
ALTERNATOR CIRCUIT OK
POSSIBLE PROBLEMS
CABLES
IS THE STARTER NEGATIVE CABLE VOLTAGE DROP LESS THAN 0.25 VOLT?
TEST OPTIONS
1. STE/ICE-R TEST 69 (Page 2-498)
2. MULTIMETER
REASON FOR QUESTION
A large voltage drop indicates high resistance. High resistance means less current flow.
NO
REPAIR/ REPLACE WIRE 7A.
YES
6
KNOWN INFO
BATTERIES OK
NEGATIVE CABLE OK
ALTERNATOR CIRCUIT OK
POSSIBLE PROBLEMS
CABLES
IS THE VOLTAGE DROP FROM THE POWER STUD TO THE STARTER LESS THAN 0.25 VOLT? TEST POINT IS THE POWER STUD; GROUND IS THE STARTER TERMINAL.
TEST OPTIONS
1. STE/ICE-R TEST 89 (Page 2-506)
2. MULTIMETER
REASON FOR QUESTION
A large voltage drop indicates high resistance. High resistance means less current flow.
NO
REPAIR/ REPLACE WIRE 6A.
YES
NO FAULTS FOUND IN BATTERY CIRCUIT.

REFERENCE INFORMATION

BATTERY CIRCUIT

These tests check the strength of the batteries during engine cranking. If you don't have STE/ICE-R, skip this step, but remember that you haven't tested the batteries under load.

BATTERY INTERNAL RESISTANCE
STE/ICE-R TEST 73

1. Disconnect wire 54A at injection pump to prevent starting.
2. Disconnect glow plug controller and fan solenoid.
3. Start Test 73, Battery Internal Resistance.
4. Wait for the GO message. Crank the engine.
5. Result is displayed in milliohms. Battery resistance should be 25 milliohms max.

BATTERY RESISTANCE CHANGE
STE/ICE-R TEST 75

1. Disconnect wire 54A at injection pump to prevent starting.
2. Disconnect glow plug controller and fan solenoid.
3. Start Test 75, Battery Resistance Change.
4. Wait for the GO message. Crank the engine.
5. Result is displayed in milliohms/second. Battery resistance change should be 50 milliohms/second max.

STARTER NEG. CABLE VOLTAGE DROP
STE/ICE-R TEST 69

1. Start Test 69, Starter Negative Cable Voltage Drop.
2. Displayed reading is in volt. The cable voltage drop should be less than 0.25 volt max.

Repair/replace wire (para. 4-80).

DC VOLTAGE 0-45 VOLTS
STE/ICE-R TEST 89

1. Connect RED clip to the indicated test point, BLACK clip to negative or ground.
2. Start Test 89, DC Volts.
3. Displayed reading is in volts.

Repair/replace wire (para. 4-80).

BATTERY CIRCUIT

DIAGNOSTIC FLOWCHART

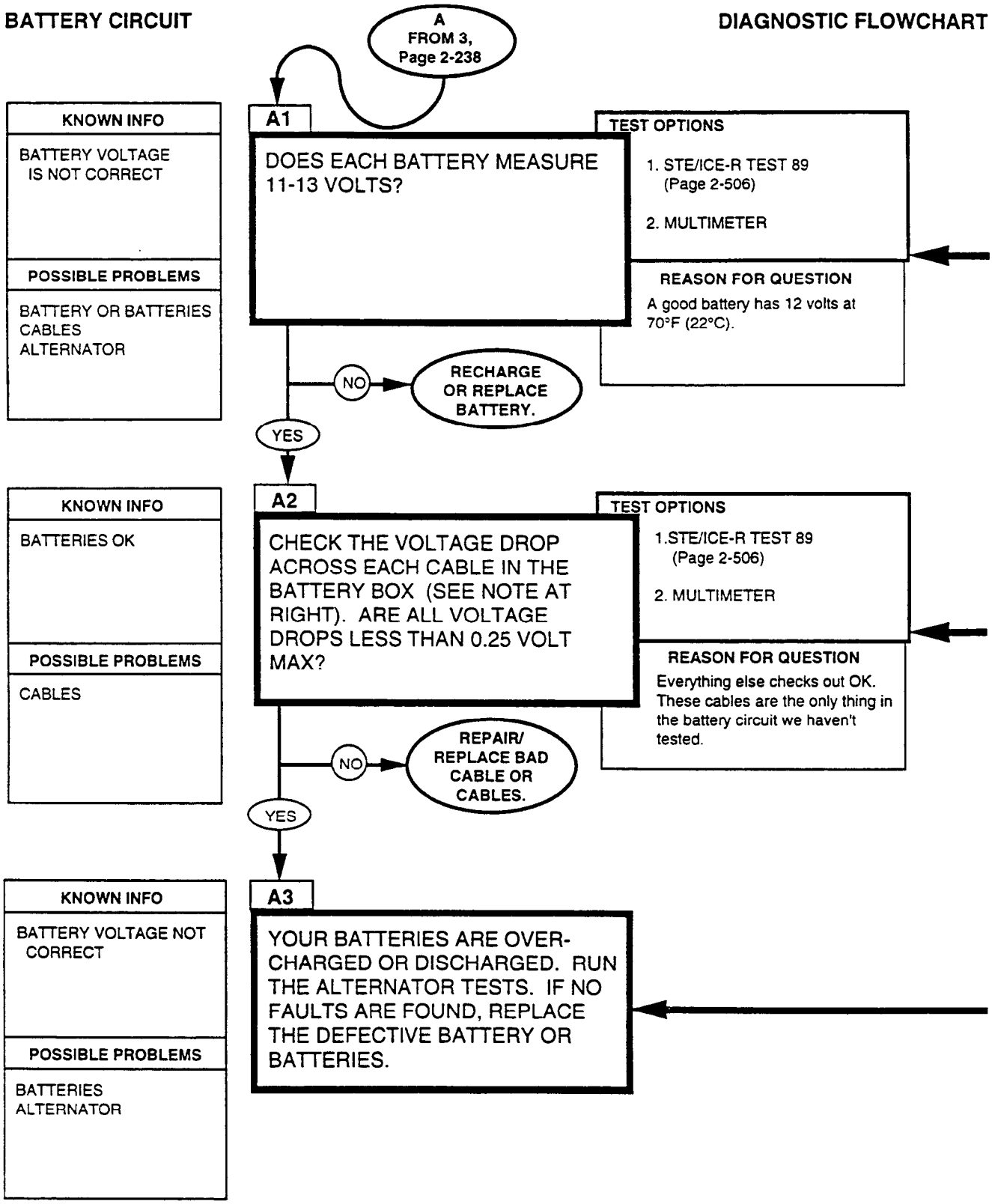

Measure from the positive post to the negative post of each battery.

For battery replacement instructions, refer to para. 4-74.

DC VOLTAGE 0-45 VOLTS STE/ICE-R TEST 89
1. Connect RED clip to the indicated test point. BLACK clip to negative or ground. 2. Start Test 89, DC Volts. 3. Displayed reading is in volts.

NOTE

Check these cables:

WIRE 68, connecting the batteries together. Test point is the postive terminal of one of the batteries.

WIRE 49A, connecting the batteries to the power stud. Test point is the power stud.

Wire connecting the battery to the shunt. Test point is the shunt.

Wire connecting shunt to ground stud. Test point is the shunt.

For repair or replacement of cables, refer to para. 4-68.

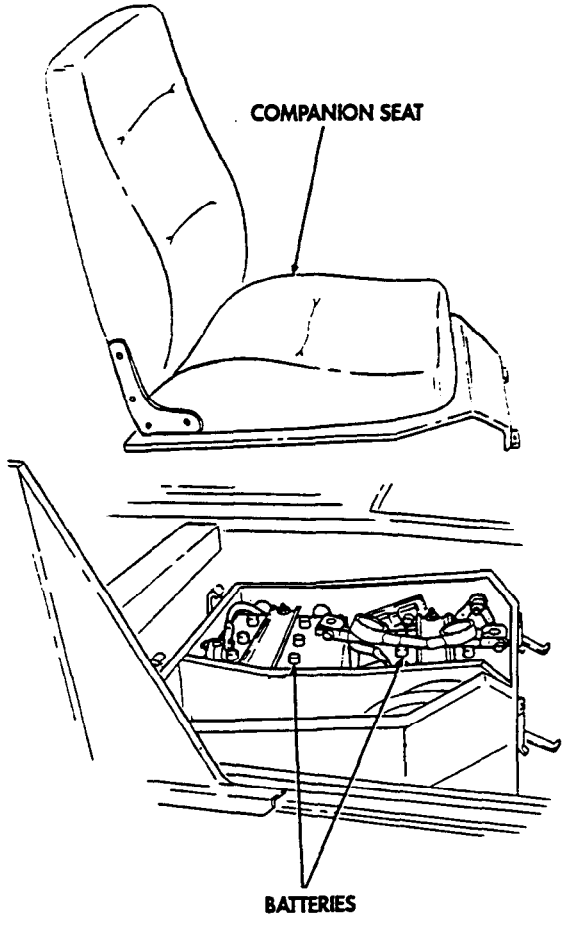

If you use STE/ICE-R test 67 in Step 3 on page 2-252, you may have a faulty DCA. Try running the tests using STE/ICE-R test 89 with the W2 cable.

See para. 4-74. (Also check each battery's specific gravity in accordance with TM 9-6140-200-14.)

Replace battery (para. 4-74).

BATTERY CIRCUIT

DIAGNOSTIC FLOWCHART

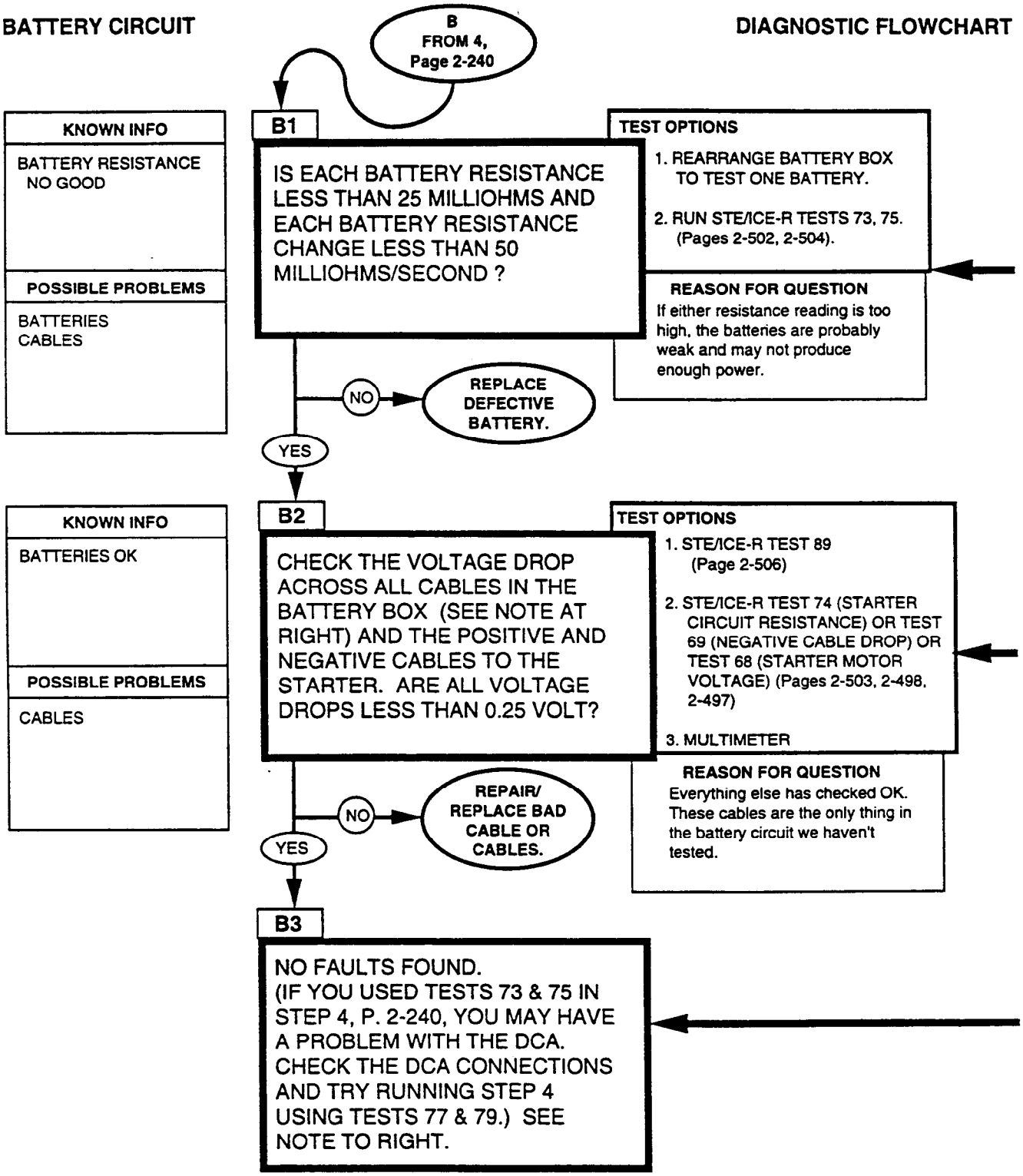

Replace batteries (para. 4-74).

BATTERY INTERNAL RESISTANCE
STE/ICE-R TEST 73

1. Disconnect wire 54A at injection pump to prevent starting.
2. Disconnect glow plug controller and fan solenoid (to keep waveform clean).
3. Start Test 73, Battery Internal Resistance.
4. Wait for the GO message. Crank the engine.
5. Result is displayed in milliohms. Battery resistance should be 25 milliohms max.

NOTE

Check these cables:
WIRE 68, connecting the batteries together. Test point is the positive terminal of one of the batteries.
WIRE 49A, connecting the battery to the power stud. Test point is the power stud.
Wire connecting the battery to the shunt. Test point is the negative terminal of the battery.
Wire connecting shunt to ground stud. Test point is the shunt.

Replace batteries (para. 4-74).

BATTERY RESISTANCE CHANGE
STE/ICE-R TEST 75

1. Disconnect wire 54A at injection pump to prevent starting.
2. Disconnect glow plug controller and fan solenoid (to keep waveform clean).
3. Start Test 75, Battery Resistance Change.
4. Wait for the GO message. Crank the engine.
5. Result is displayed in milliohms/second. Battery resistance change should be 50 milliohms/second max.

NOTE

Tests 77 and 79 are TK tests that do the same thing that DCA tests 73 and 75 do. See TM 9-4910-571-12&P for instructions on how to run these tests.

DC VOLTAGE 0-45 VOLTS
STE/ICE-R TEST 89

1. Connect RED clip to the indicated test point, BLACK clip to negative or ground.
2. Start Test 89, DC Volts.
3. Displayed reading is in volts.

2-36. STARTER CIRCUIT TESTS

The starter circuit consists of the batteries, starter solenoid, starter motor, rotary switch, parts of the Protective Control Box (PCB) and related electrical wiring. The relationship of these parts is shown in the block diagram below, and a simplified functional flow schematic is provided on the foldout FP-15.

The starter solenoid and starter motor are enclosed in housings to protect them from dirt, icing conditions, and other road hazards.

When the rotary switch is turned to START, the PCB checks if the engine is running. If the engine is not running, the PCB sends a signal to the starter solenoid which energizes the solenoid windings and causes the solenoid contacts to close, sending battery power to the starter motor. The battery power causes the starter motor pinion gear to engage the engine flywheel ring gear and the engine cranks. When the engine starts, the rotary switch should be released, allowing it to return to the RUN position. This tells the PCB to release the starter solenoid which, in turn, disengages the starter motor from the engine.

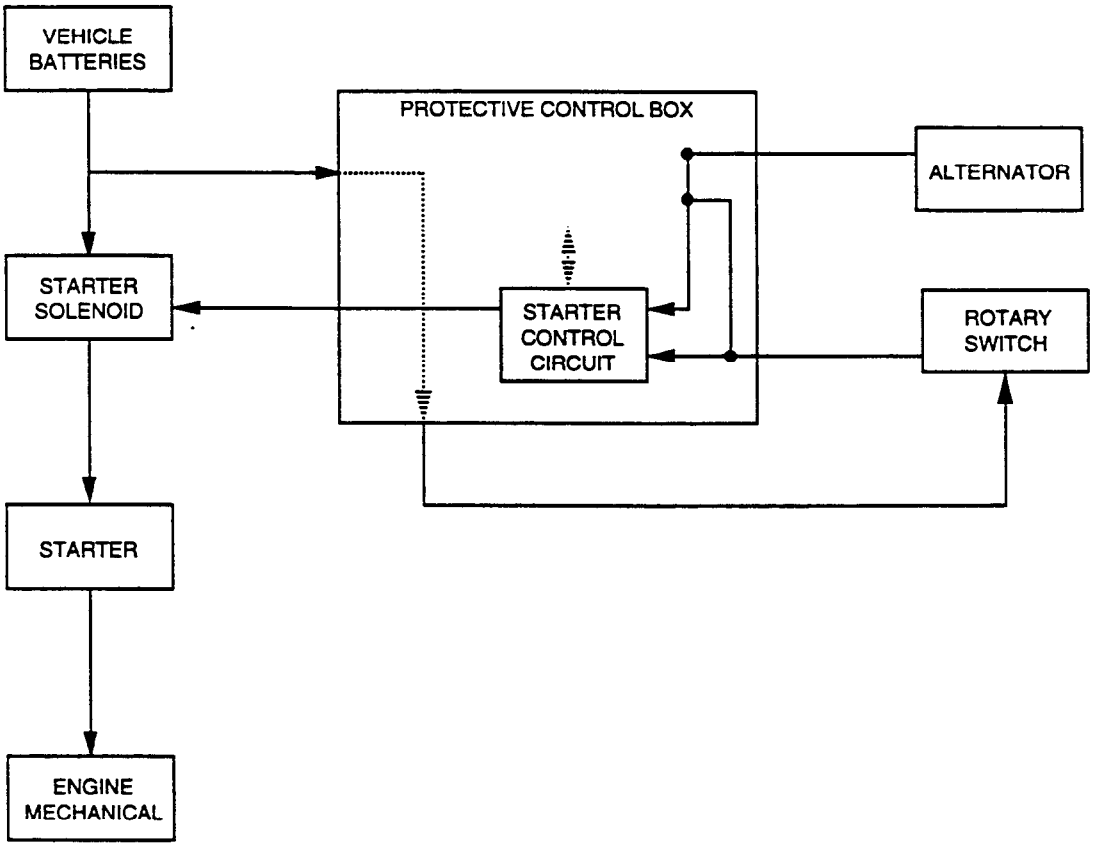

STARTER CIRCUIT

DIAGNOSTIC FLOWCHART

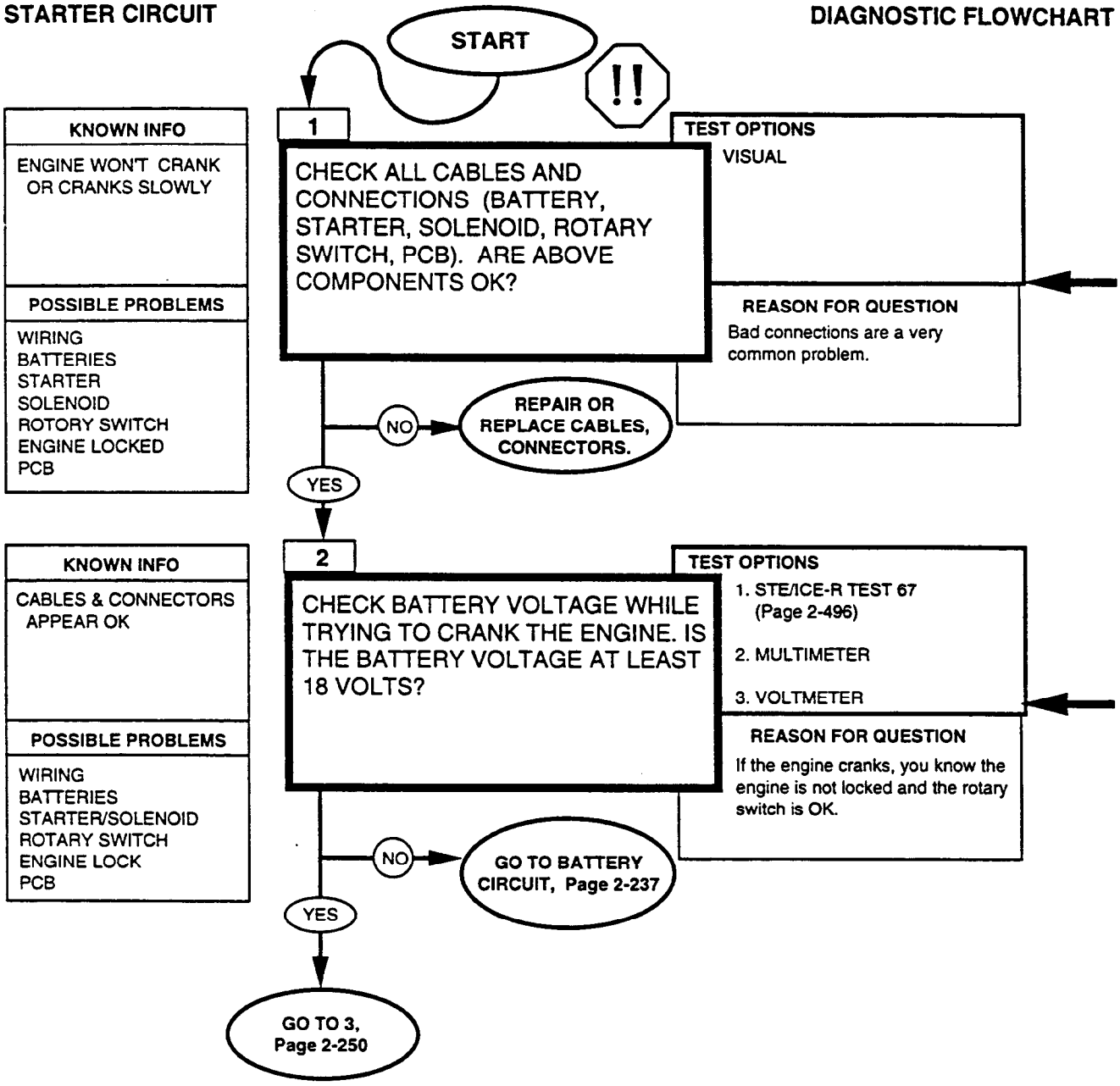

REFERENCE INFORMATION

STARTER CIRCUIT

BAD CONNECTIONS ARE THE MOST COMMON PROBLEM !

Sometimes just disconnecting, cleaning, and reconnecting will solve a problem. BE THOROUGH! The time you save may be your own.

Refer to the functional flow schematic and check the following;

1. BATTERY - make sure all connections are clean and tight, including the shunt and power stud.
2. STARTER - check the high current wire (heavy gauge wire 6A) at the starter. Don't just check for voltage; a loose connection will have voltage but can't carry much current.

WARNING

Disconnect negative battery cable before disconnecting and reconnecting PCB harness.

WARNING

There is battery voltage at the PCB at all times. Failure to disconnect battery cable will result in damage to equipment or injury to personnel.

3. PROTECTIVE CONTROL BOX - Remove BOTH connectors and look for bent or broken pins, pins pushed out of their socket, or dirt and corrosion in the connections.
4. ROTARY SWITCH - Check the wires at the switch. Don't just look. Feel the connections to make sure they're snug. Many problems can be solved by seeing with your fingers, not just your eyes.

A cold engine should crank at least 100 rpm.
A warm engine should crank at least 180 rpm.

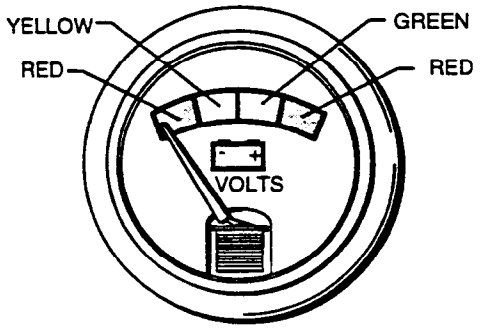

VOLTMETER

BATTERY VOLTAGE STE/ICE-R TEST 67
1. Start Test 67, Battery Voltage. 2. Displayed reading is in volts. Batteries should be 23-25.5 volts. Batteries voltage will drop when glow plugs turn on.

BATTERY VOLTAGE MULTIMETER
1. Set the voltmeter to a DC volts scale of at least 40 volts. 2. Connect the RED lead to positive and the BLACK lead to negative. 3. Be sure to read the correct scale.

STARTER CIRCUIT

DIAGNOSTIC FLOWCHART

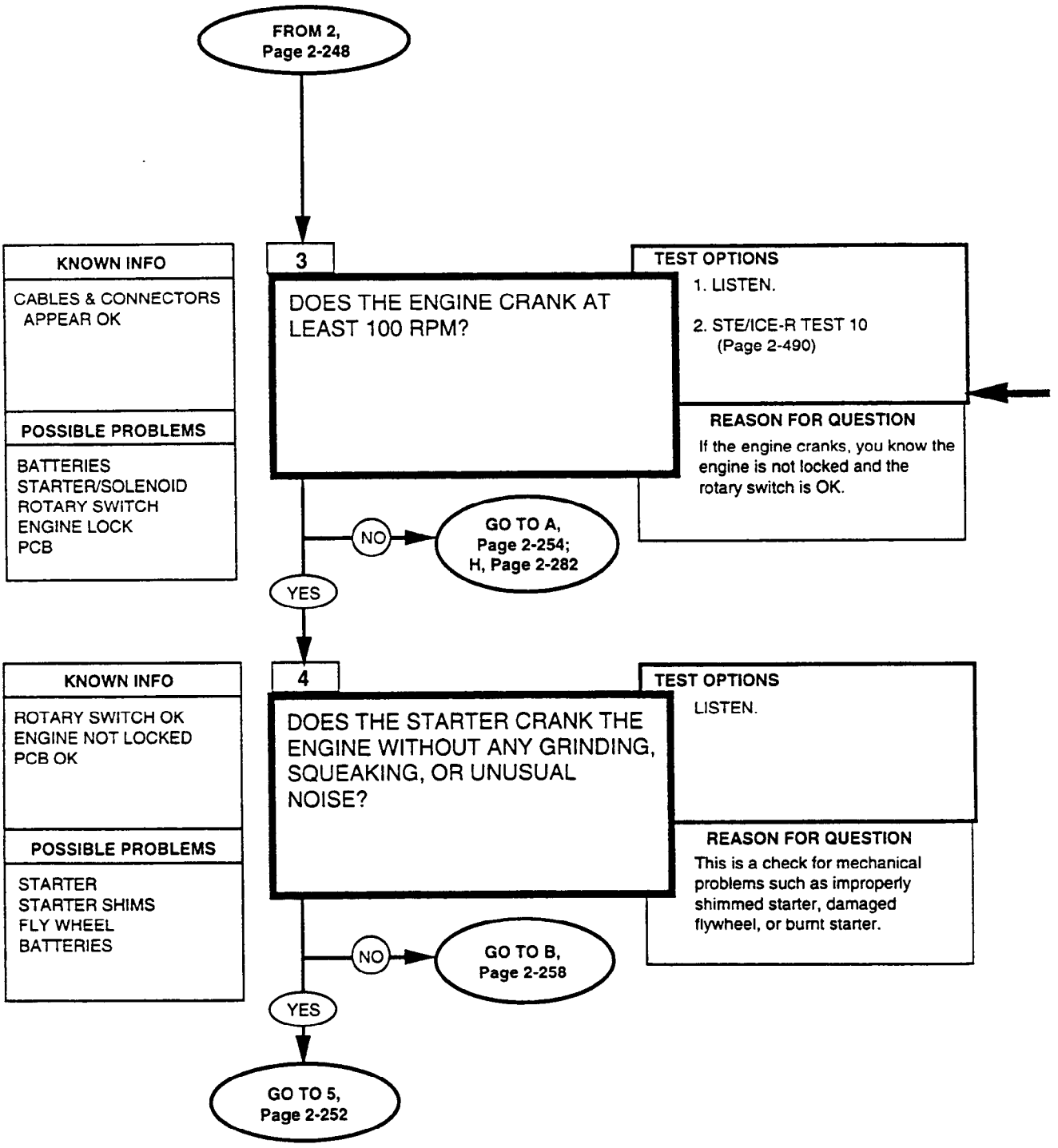

ENGINE RPM STE/ICE-R TEST 10
1. Start Test 10, Engine RPM. 2. Crank or start the engine. Displayed reading is RPM. Cranking rpm should be approximately 100. Idle rpm should be 625 - 675.

STARTER CIRCUIT

DIAGNOSTIC FLOWCHART

FROM 4, Page 2-250

5

KNOWN INFO

CRANKS OK

POSSIBLE PROBLEMS

ROTARY SWITCH
STARTER
PCB

DOES THE STARTER STOP CRANKING WHEN THE ROTARY SWITCH IS RETURNED TO THE RUN OR STOP POSITIONS?

TEST OPTIONS

LISTEN.

REASON FOR QUESTION

The starter solenoid could be stuck or, more likely, there may be a short to the solenoid.

NO → GO TO C, Page 2-262

YES ↓

6

KNOWN INFO

ROTARY SWITCH OK
ENGINE NOT LOCKED
PCB OK

POSSIBLE PROBLEMS

BATTERIES
STARTER/SOLENOID

IS THE AVERAGE STARTER CURRENT BETWEEN 200 AND 300 AMPS?

TEST OPTIONS

1. STE/ICE-R TEST 71 (Page 2-500)
2. MULTIMETER

REASON FOR QUESTION

This will tell if the starter is OK and if the batteries have enough power to crank the engine.

NO → GO TO D, Page 2-268

YES ↓

7

KNOWN INFO

ROTARY SWITCH OK
ENGINE NOT LOCKED
STARTER OK

POSSIBLE PROBLEMS

BATTERIES

IS THE BATTERY VOLTAGE AT LEAST 18.5 VOLTS WHILE CRANKING?

TEST OPTIONS

1. STE/ICE-R TEST 67 (Page 2-496)
2. MULTIMETER

REASON FOR QUESTION

A good cranking voltage, combined with a good starter current, shows that the batteries are OK.

NO → GO TO BATTERY TESTS, Page 2-237

YES ↓

NO FAULTS FOUND.

REFERENCE INFORMATION

STARTER CIRCUIT

STARTER AVERAGE CURRENT STE/ICE-R TEST 71

1. Start Test 71, Starter Average Current.
2. Displayed reading is in amps. The starter should draw at least 200 amps with a peak of over 400 amps.

BATTERY CURRENT MULTIMETER

1. Set the voltmeter to a DC volts scale of about 1 volt.
2. Connect the BLACK lead to the battery side of the current shunt and the RED lead to the other end of the current shunt.
3. Current shunt voltage is proportional to battery current, 100 millivolts = 1,000 amps. To get current, multiply millivolts x 10.

BATTERY VOLTAGE STE/ICE-R TEST 67

1. Start Test 67, Battery Voltage.
2. Displayed reading is in volts. Batteries should be 23-25.5 volts. Batteries voltage will drop when glow plugs turn on.

BATTERY VOLTAGE MULTIMETER

1. Set the voltmeter to a DC volts scale of at least 40 volts.
2. Connect the RED lead to positive and the BLACK lead to negative.
3. Be sure to read the correct scale.

STARTER CIRCUIT

DIAGNOSTIC FLOWCHART

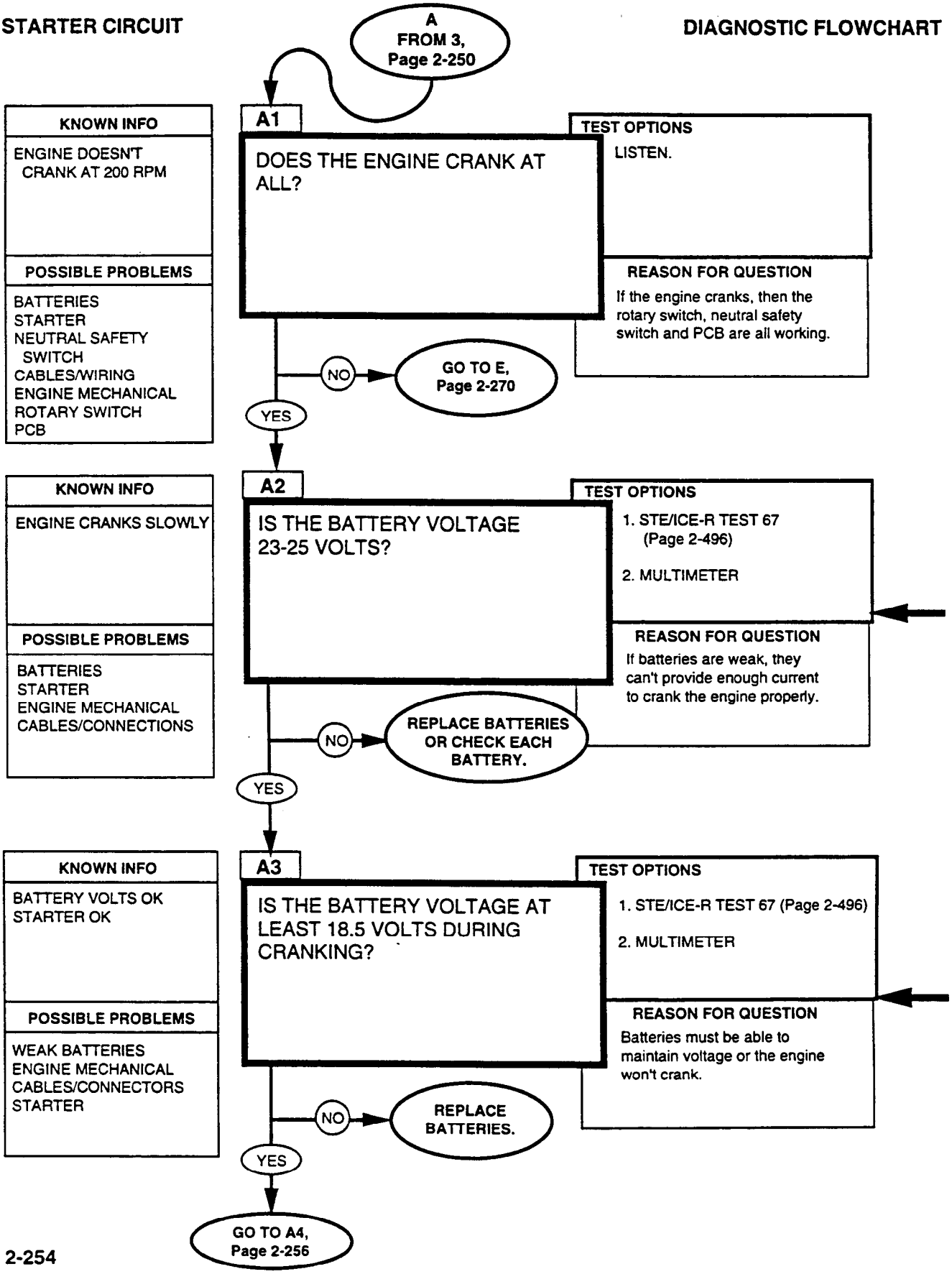

BATTERY VOLTAGE STE/ICE-R TEST 67
1. Start Test 67, Battery Voltage. 2. Displayed reading is in volts. Batteries should be 23-25.5 volts. Batteries voltage will drop when glow plugs turn on.

VOLTAGE MULTIMETER
1. Set the voltmeter to a DC volts scale of at least 40 volts. 2. Connect the RED lead to positive and the BLACK lead to negative. 3. Be sure to read the correct scale.

Connect red to
positive = power stud.

Connect black to
negative = battery side of current shunt.

Replace batteries (para. 4-74).

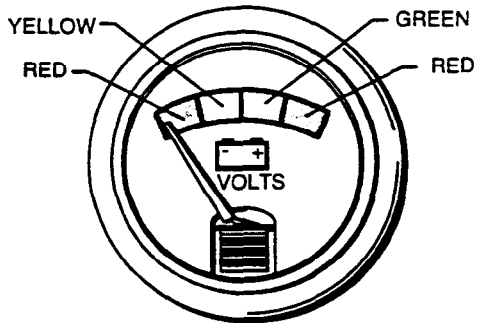

VOLTMETER

Connect red to
positive = power stud.

Connect black to
negative = battery side of current shunt.

Replace batteries (para. 4-74).

STARTER CIRCUIT **DIAGNOSTIC FLOWCHART**

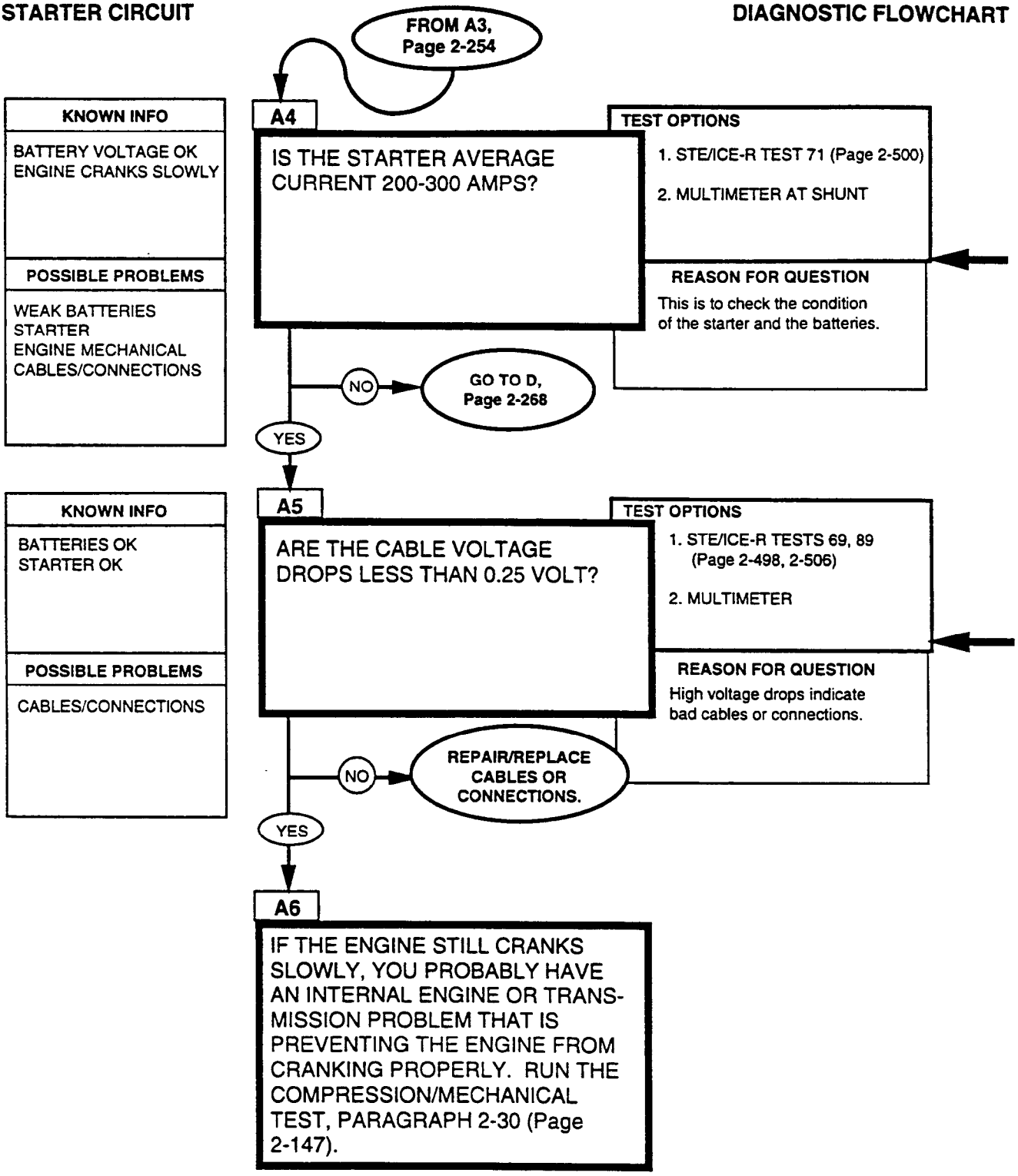

REFERENCE INFORMATION

STARTER CIRCUIT

STARTER AVERAGE CURRENT STE/ICE-R TEST 71

1. Start Test 71, Starter Average Current.
2. Displayed reading is in amps. The starter should draw at least 200 amps with a peak of over 400 amps.

Check these cables:

Starter negative cable - STE/ICE-R test 69

Wire 68, connecting the batteries together. Test point is the positive battery post.

Wire 49A, connecting battery to power stud. Test point is the power stud.

Wire connecting battery to shunt (50A). Test point is the positive battery post.

Power stud to starter motor (6A). Test point is the power stud.

Replace or repair cables (para. 4-68).

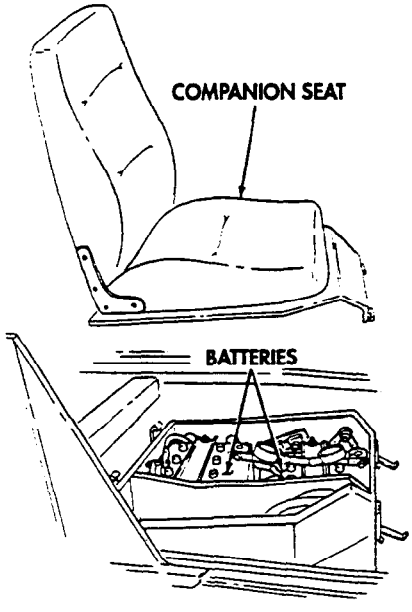

STARTER NEG. CABLE VOLTAGE DROP STE/ICE-R TEST 69

1. Start Test 69, Starter Negative Cable Voltage Drop.
2. Displayed reading is in volts. The cable voltage drop should be less than 0.25 volt max.

DC VOLTAGE 0-45 VOLTS STE/ICE-R TEST 89

1. Connect RED clip to the indicated test point, BLACK clip to negative or ground.
2. Start Test 89, DC Volts.
3. Displayed reading is in volts.

BATTERY CURRENT MULTIMETER

1. Set the voltmeter to a DC volts scale of about 1 volt.
2. Connect the BLACK lead to the battery side of the current shunt and the RED lead to the other end of the current shunt.
3. Current shunt voltage is proportional to battery current, 100 millivolts = 1,000 amps. To get current, multiply milivolts x 10.

VOLTAGE MULTIMETER

1. Set the voltmeter to a DC volts scale of at least 40 volts.
2. Connect the RED lead to positive and the BLACK lead to negative.
3. Be sure to read the correct scale.

STARTER CIRCUIT

DIAGNOSTIC FLOWCHART

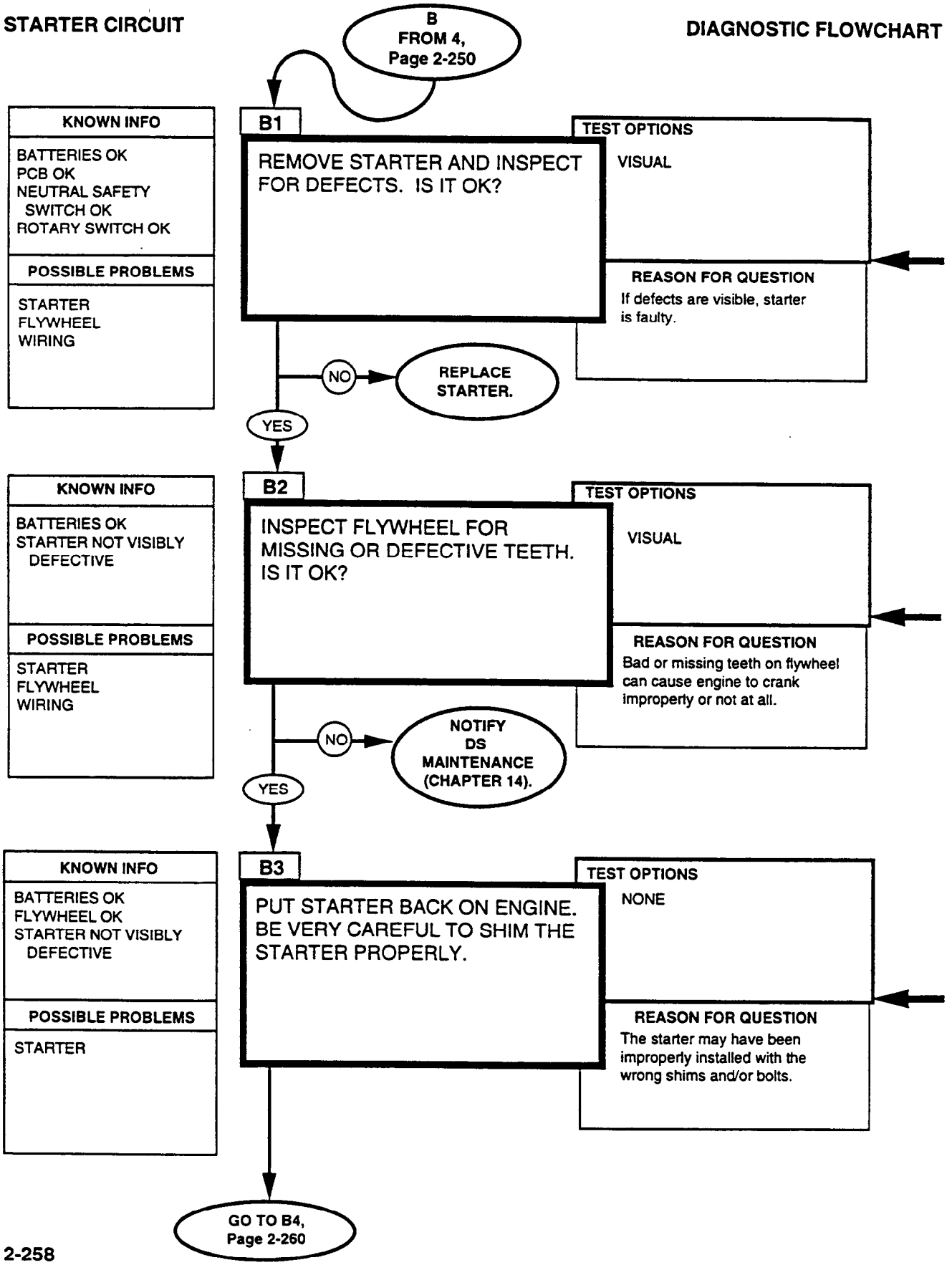

Remove starter motor (para. 4-11).
Check the pinion and gear for missing or broken teeth, unusual wear, bent pieces, etc.
Check the pinion by turning it on the screw shaft.
Check the armature by prying the pinion with a screwdriver. The armature should turn freely.

Replace starter (para. 4-11).

Disconnect the fuel solenoid, wire 54A, to prevent accidental starting. Rotate the engine with a breaker bar and socket on the crankshaft pulley to inspect the engine flywheel for missing or defective teeth.

Replace starter (para. 4-11).

STARTER CIRCUIT **DIAGNOSTIC FLOWCHART**

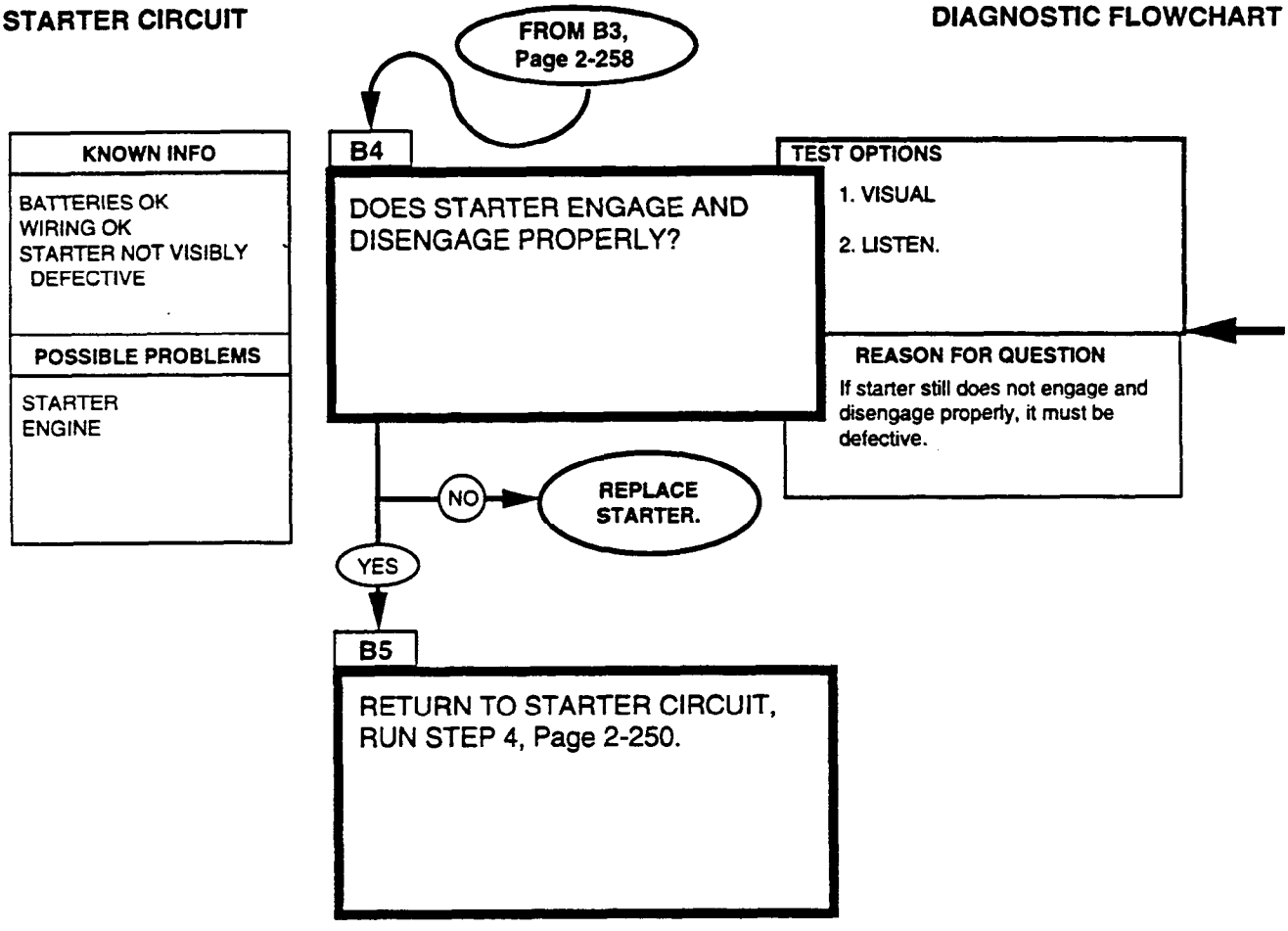

Replace starter (para. 4-11).

STARTER CIRCUIT

DIAGNOSTIC FLOWCHART

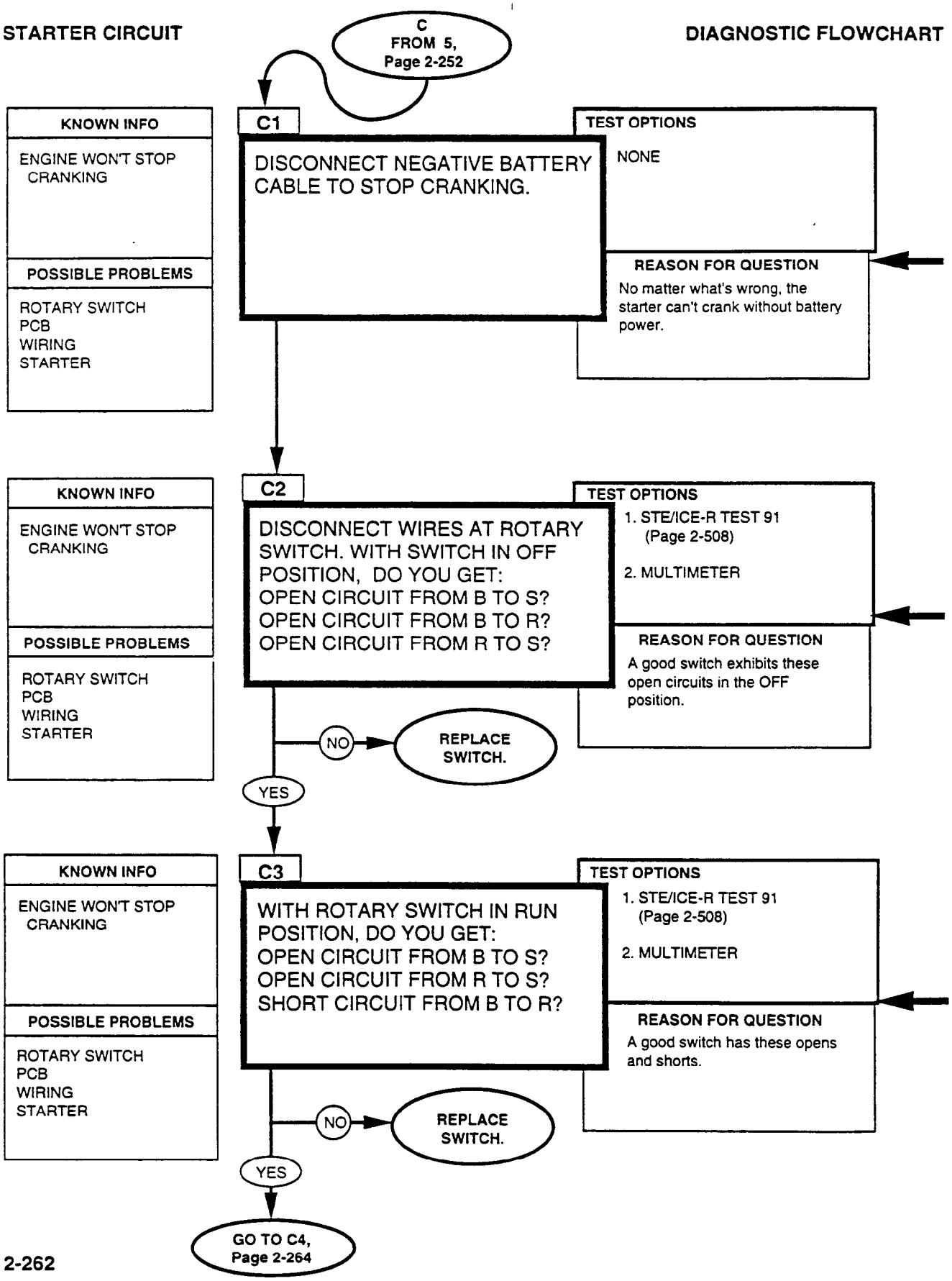

RESISTANCE AND CONTINUITY
0-4,500 OHMS
STE/ICE-R TEST 91

1. Connect RED clip and BLACK clip to the indicated test points in the question. RED to the first, BLACK to the second.
2. Start Test 91, 0-4,500 Ohms.
3. Displayed reading is in ohms. Less than 5 ohms is continuity. If the resistance is over 4,500 ohms, STE/ICE-R displays .9.9.9.9.

Don't forget that your vehicle batteries are disconnected, so you can't run the STE/ICE-R from the DCA. You have to use the power cable and connect directly to the batteries.

When the resistance is too high for STE/ICE-R to measure, as in the case of an open circuit, STE/ICE-R displays .9.9.9.9.

Replace rotary switch (para. 4-10).

CONTINUITY (RESISTANCE)
MULTIMETER

1. Set the voltmeter to an ohms scale of about 1,000 ohms.
2. Connect the RED and BLACK leads to the connections stated in the question.
3. Be sure to read the correct scale. Less than 5 ohms indicates continuity. For an open circuit, the meter should peg full scale (needle all the way to the left).

Don't forget that your vehicle batteries are disconnected, so you can't run the STE/ICE-R from the DCA. You have to use the power cable and connect directly to the batteries.

When the resistance is too high for STE/ICE-R to measure, as in the case of an open circuit, STE/ICE-R displays .9.9.9.9.

Replace rotary switch (para. 4-10).

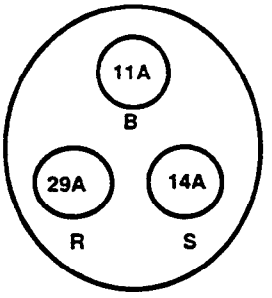

REAR OF ROTARY SWITCH

STARTER CIRCUIT

DIAGNOSTIC FLOWCHART

FROM C3, Page 2-262

C4

KNOWN INFO

ROTARY SWITCH OK

POSSIBLE PROBLEMS

PCB
WIRING
STARTER

RECONNECT ROTARY SWITCH. TURN SWITCH TO STOP. CHECK FOR OPEN CIRCUIT IN THE PCB BODY CONNECTOR HARNESS BETWEEN THE FOLLOWING SOCKETS: G-A, G-B, A-B, F-A, AND F-B.
ARE THEY ALL OPEN CIRCUITS ?

TEST OPTIONS

1. STE/ICE-R TEST 91 (Page 2-508)
2. MULTIMETER

REASON FOR QUESTION

Continuity between any of these pins indicates a short between the wires in body harness

NO → REPAIR APPROPRIATE WIRE OR REPLACE HARNESS.

YES ↓

C5

KNOWN INFO

ROTARY SWITCH OK
BODY HARNESS OK

POSSIBLE PROBLEMS

PCB
WIRING
STARTER

RECONNECT BODY CONNECTOR. DISCONNECT ENGINE CONNECTOR. DISCONNECT WIRE 74A AT STARTER. IS THERE AN OPEN CIRCUIT FROM SOCKET E TO SOCKET I ENGINE CONNECTOR HARNESS?

TEST OPTIONS

1. STE/ICE-R TEST 91 (Page 2-508)
2. MULTIMETER

REASON FOR QUESTION

Continuity between these pins indicates a short in the engine harness.

NO → REPAIR WIRES OR REPLACE HARNESS.

YES ↓

C6

KNOWN INFO

ROTARY SWITCH OK
BODY HARNESS OK

POSSIBLE PROBLEMS

PCB
WIRING
STARTER

IS THERE AN OPEN CIRCUIT FROM SOCKET E OF PCB ENGINE CONNECTOR HARNESS TO ENGINE GROUND?

TEST OPTIONS

1. STE/ICE-R TEST 91 (Page 2-508)
2. MULTIMETER

REASON FOR QUESTION

Continuity indicates shorted connector in the starter solenoid.

NO → REPLACE STARTER.

YES ↓

GO TO C7, Page 2-266

REFERENCE INFORMATION

STARTER CIRCUIT

Don't forget that your vehicle batteries are disconnected, so you can't run the STE/ICE-R from the DCA. You have to use the power cable and connect directly to the batteries.

When the resistance is too high for STE/ICE-R to measure, as in the case of an open circuit, STE/ICE-R displays .9.9.9.9.

Repair wiring or replace harness (para. 4-80).

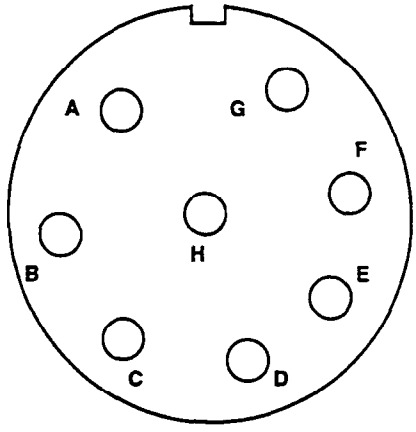

PCB BODY CONNECTOR

RESISTANCE AND CONTINUITY 0-4,500 OHMS STE/ICE-R TEST 91
1. Connect RED clip and BLACK clip to the indicated test points in the question. RED to the first, BLACK to the second. 2. Start Test 91, 0-4,500 Ohms. 3. Displayed reading is in ohms. Less than 5 ohms is continuity. If the resistance is over 4,500 ohms, STE/ICE-R displays .9.9.9.9.

Check the wires at the connectors for shorts. If there are no visible shorts, you have to replace the harness.

Repair wiring or replace harness (para. 4-80).

CONTINUITY (RESISTANCE) MULTIMETER
1. Set the voltmeter to an ohms scale of about 1,000 ohms. 2. Connect the RED and BLACK leads to the connections stated in the question. 3. Be sure to read the correct scale. Less than 5 ohms indicates continuity. For an open circuit, the meter should peg full scale (needle all the way to the left).

Replace starter (para. 4-11).

STARTER CIRCUIT

DIAGNOSTIC FLOWCHART

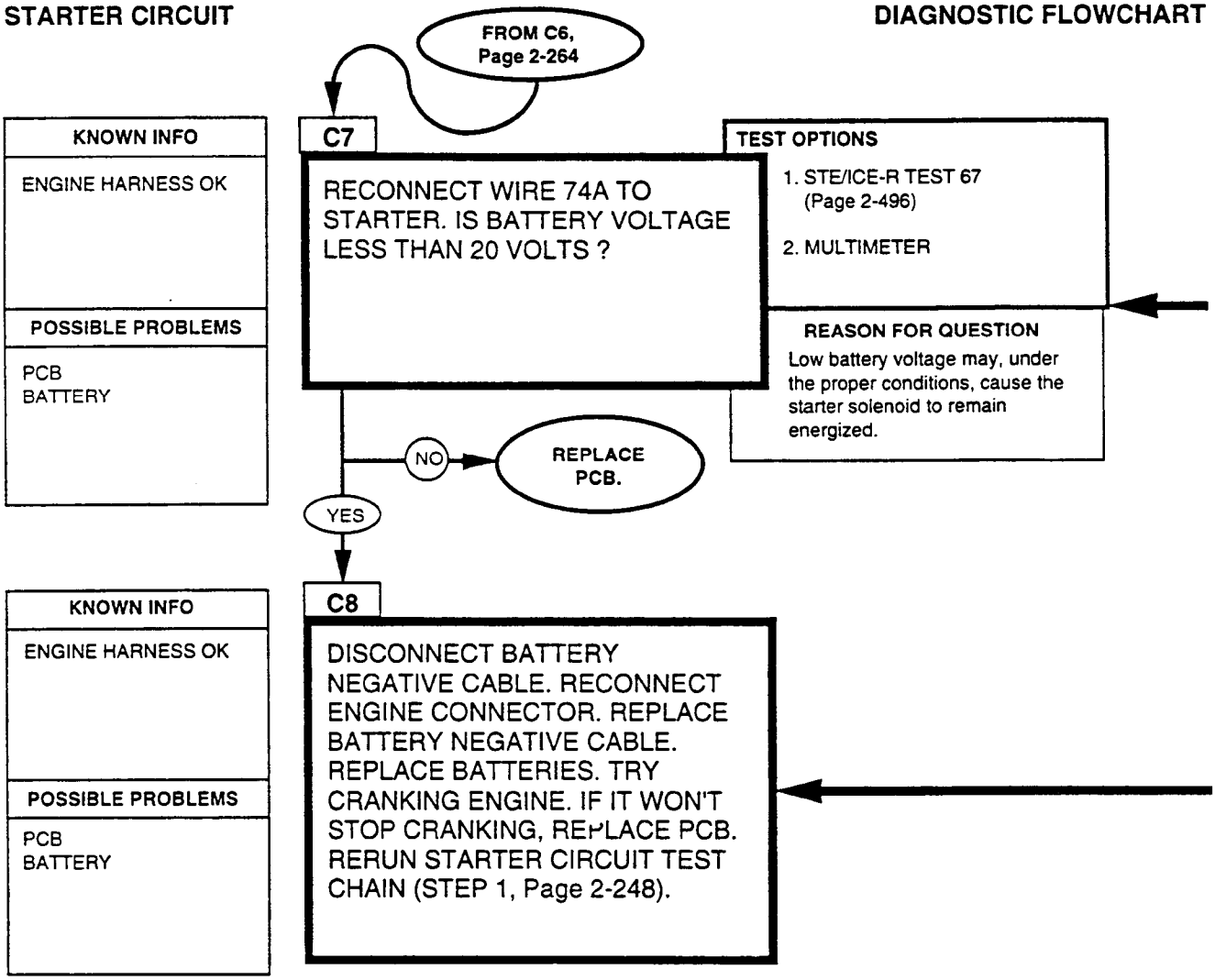

Replace PCB (para. 4-4).

BATTERY VOLTAGE MULTIMETER
1. Set the voltmeter to a DC volts scale of at least 40 volts. 2. Connect the RED lead to positive and the BLACK lead to negative. 3. Be sure to read the correct scale.

Replace batteries (para. 4-74).

BATTERY VOLTAGE STE/ICE-R TEST 67
1. Start Test 67, Battery Voltage. 2. Displayed reading is in volts. Batteries should be 23-25.5 volts. Batteries voltage will drop when glow plugs turn on.

STARTER CIRCUIT

DIAGNOSTIC FLOWCHART

D
FROM 6, Page 2-252
OR A4, Page 2-256

D1

KNOWN INFO

CURRENT DRAW TOO HIGH OR LOW

POSSIBLE PROBLEMS

BATTERIES
STARTER
CABLES

IS BATTERY VOLTAGE 23-25.5 VOLTS?

TEST OPTIONS

1. STE/ICE-R TEST 67 (Page 2-496)
2. MULTIMETER

REASON FOR QUESTION

Low voltage may indicate low battery capacity.

NO → RECHARGE OR REPLACE BATTERIES.

YES ↓

D2

KNOWN INFO

BATTERY VOLTAGE OK

POSSIBLE PROBLEMS

BATTERIES
STARTER
CABLES

IS BATTERY INTERNAL RESISTANCE LESS THAN 25 MILLIOHMS AND BATTERY RESISTANCE CHANGE LESS THAN 50 MILLIOHMS/SECOND?

TEST OPTIONS

STE/ICE-R TESTS 73, 75 (Pages 2-502, 2-504)

REASON FOR QUESTION

Battery resistance and resistance change is an indication of the ability of the battery to supply current.

NO → REPLACE BATTERIES.

YES ↓

D3

KNOWN INFO

BATTERIES OK

POSSIBLE PROBLEMS

STARTER
CABLES

ARE THE POSITIVE AND NEGATIVE CABLE DROPS 0.25 VOLT EACH?

TEST OPTIONS

1. STE/ICE-R TESTS 69, 89 (Pages 2-498, 2-506)
2. MULTIMETER

REASON FOR QUESTION

High cable resistance may limit current flow.

NO → REPLACE CABLE.

YES ↓

REPLACE STARTER.

REFERENCE INFORMATION

STARTER CIRCUIT

Replace batteries (para. 4-74).

BATTERY VOLTAGE STE/ICE-R TEST 67

1. Start Test 67, Battery Voltage.
2. Displayed reading is in volts. Batteries should be 23-25.5 volts. Batteries voltage will drop when glow plugs turn on.

Replace batteries (para. 4-74).

BATTERY INTERNAL RESISTANCE STE/ICE-R TEST 73

1. Disconnect wire 54A at injection pump to prevent starting.
2. Disconnect glow plug controller and fan solenoid (to keep waveform clean).
3. Start Test 73, Battery Internal Resistance.
4. Wait for the GO message. Crank the engine.
5. Result is displayed in milliohms. Battery resistance should be 25 milliohms max.

Replace cables or starter (para. 4-72 or 4-11).

STARTER NEG. CABLE VOLTAGE DROP STE/ICE-R TEST 69

1. Start Test 69, Starter Negative Cable Voltage Drop.
2. Displayed reading is in volts. The cable voltage drop should be less than 0.25 volt max.

BATTERY VOLTAGE MULTIMETER

1. Set the voltmeter to a DC volts scale of at least 40 volts.
2. Connect the RED lead to positive and the BLACK lead to negative.
3. Be sure to read the correct scale.

BATTERY RESISTANCE CHANGE STE/ICE-R TEST 75

1. Disconnect wire 54A at injection pump to prevent starting.
2. Disconnect glow plug controller and fan solenoid (to keep waveform clean).
3. Start Test 75, Battery Resistance Change.
4. Wait for the GO message. Crank the engine.
5. Result is displayed in milliohms/second. Battery resistance change should be 50 milliohms/second max.

DC VOLTAGE 0-45 VOLTS STE/ICE-R TEST 89

1. Connect RED clip to the indicated test point, BLACK clip to negative or ground.
2. Start Test 89, DC volts.
3. Displayed reading is in volts.

VOLTAGE MULTIMETER

1. Set the voltmeter to a DC volts scale of at least 40 volts.
2. Connect the RED lead to positive and the BLACK lead to negative.
3. Be sure to read the correct scale.

STARTER CIRCUIT

DIAGNOSTIC FLOWCHART

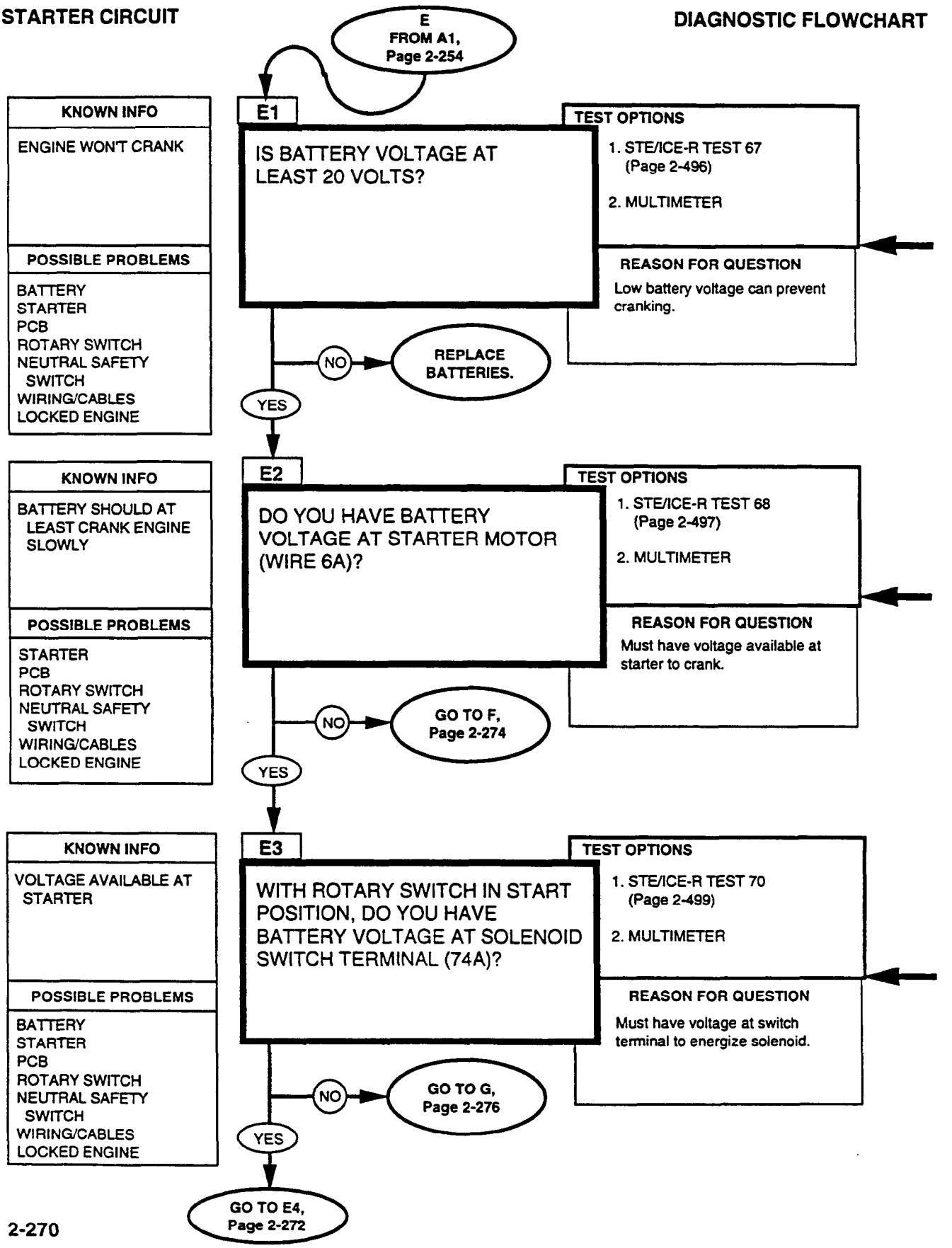

REFERENCE INFORMATION

STARTER CIRCUIT

Replace batteries (para. 4-74).

BATTERY VOLTAGE
STE/ICE-R TEST 67

1. Start Test 67, Battery Voltage.
2. Displayed reading is in volts. Batteries should be 23-25.5 volts. Batteries voltage will drop when glow plugs turn on.

BATTERY VOLTAGE
MULTIMETER

1. Set the voltmeter to a DC volts scale of at least 40 volts.
2. Connect the RED lead to positive and the BLACK lead to negative.
3. Be sure to read the correct scale.

STARTER MOTOR VOLTAGE
STE/ICE-R TEST 68

1. Start Test 68, Starter Motor Voltage.
2. Displayed reading is in volts. Starter motor voltage should be the same as battery voltage, 23-25.5 volts. During cranking, the starter motor voltage should be at least 18 volts.

STARTER SOLENOID VOLTAGE
STE/ICE-R TEST 70

1. Start Test 70, Starter Solenoid Voltage.
2. Displayed reading is in volts. Starter solenoid voltage should be the same as battery voltage, 23-25.5 volts. During cranking, the starter solenoid voltage should be at least 18 volts.

STARTER CIRCUIT

DIAGNOSTIC FLOWCHART

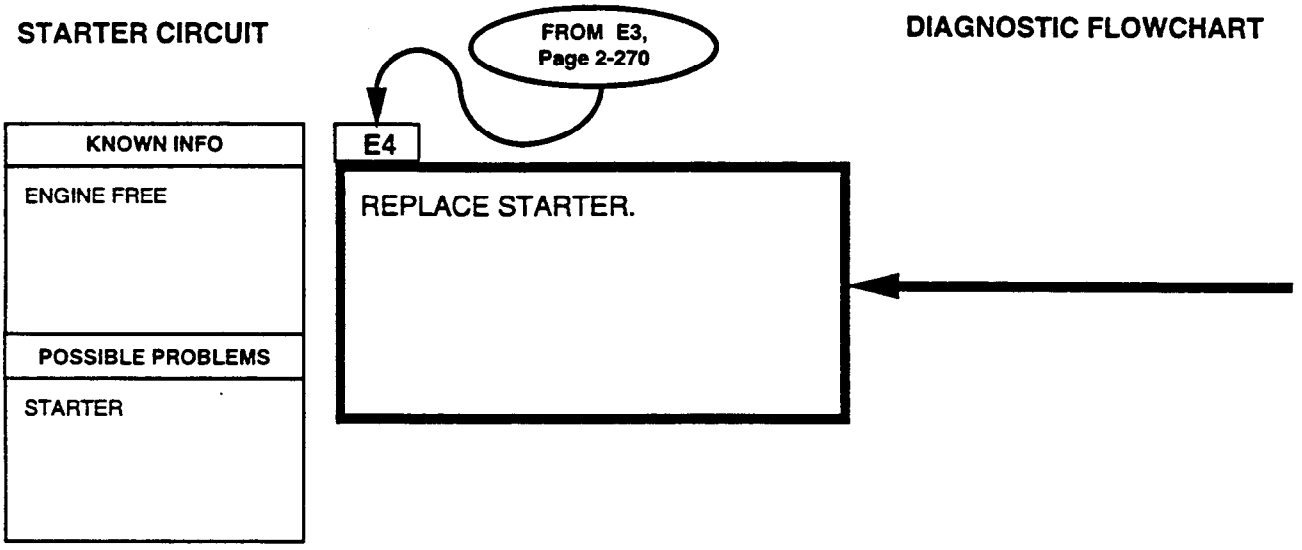

REFERENCE INFORMATION

Replace starter (para. 4-11).

STARTER CIRCUIT

DIAGNOSTIC FLOWCHART

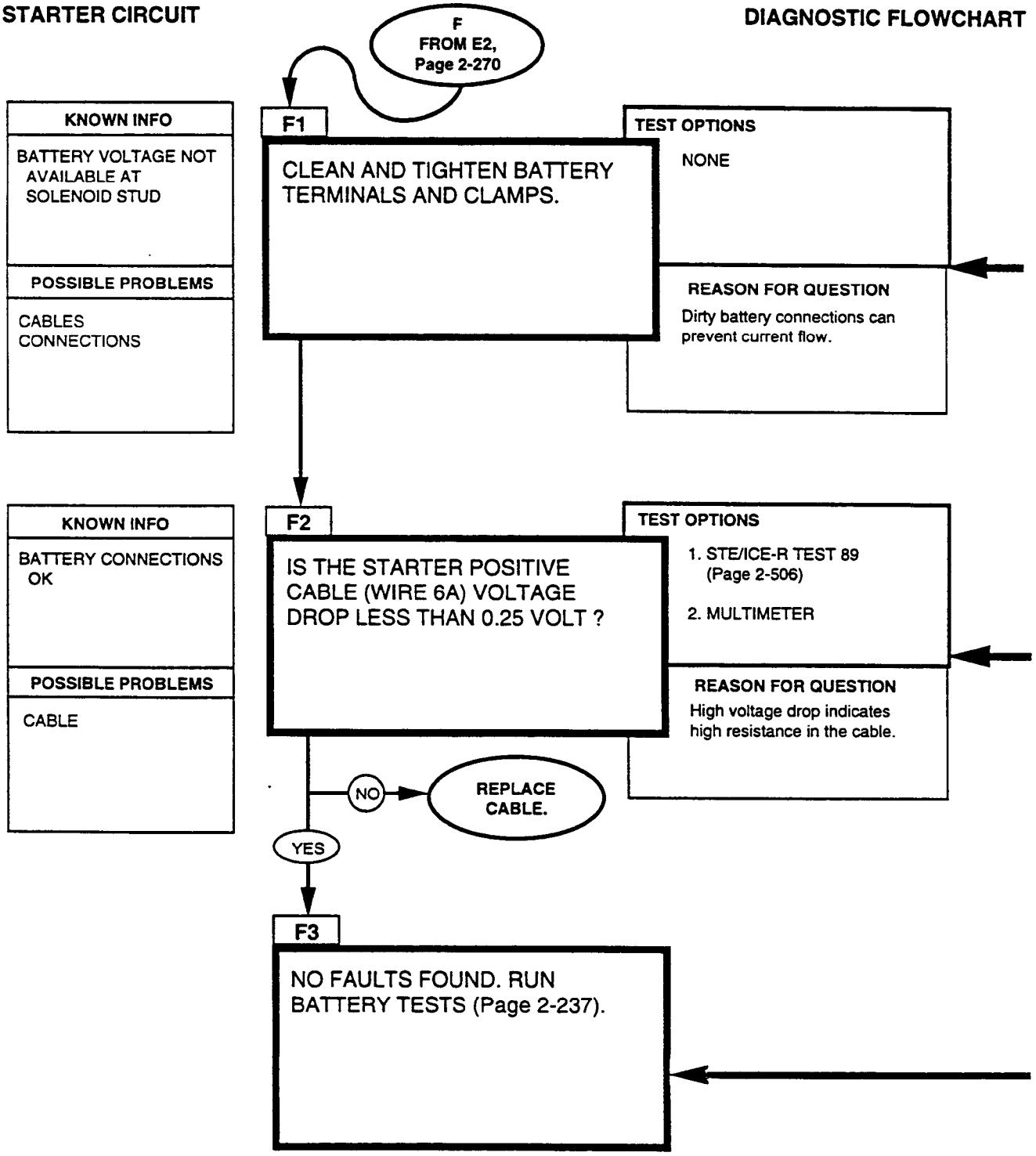

REFERENCE INFORMATION

STARTER CIRCUIT

DC VOLTAGE 0-45 VOLTS STE/ICE-R TEST 89
1. Connect RED clip to the indicated test point, BLACK clip to negative or ground. 2. Start Test 89, DC Volts. 3. Displayed reading is in volts.

VOLTAGE MULTIMETER
1. Set the voltmeter to a DC volts scale of at least 40 volts. 2. Connect the RED lead to positive and the BLACK lead to negative. 3. Be sure to read the correct scale.

Replace cable (para. 4-72).

Put the red lead on the power stud, and the black on the terminal of the starter in order to measure the voltage along wire 6A.

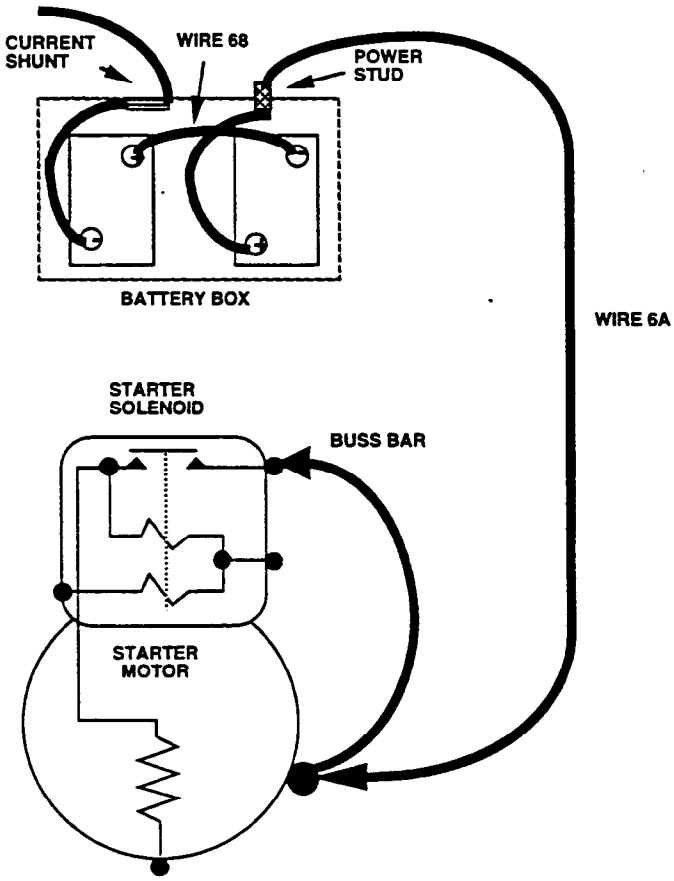

STARTER CIRCUIT

DIAGNOSTIC FLOWCHART

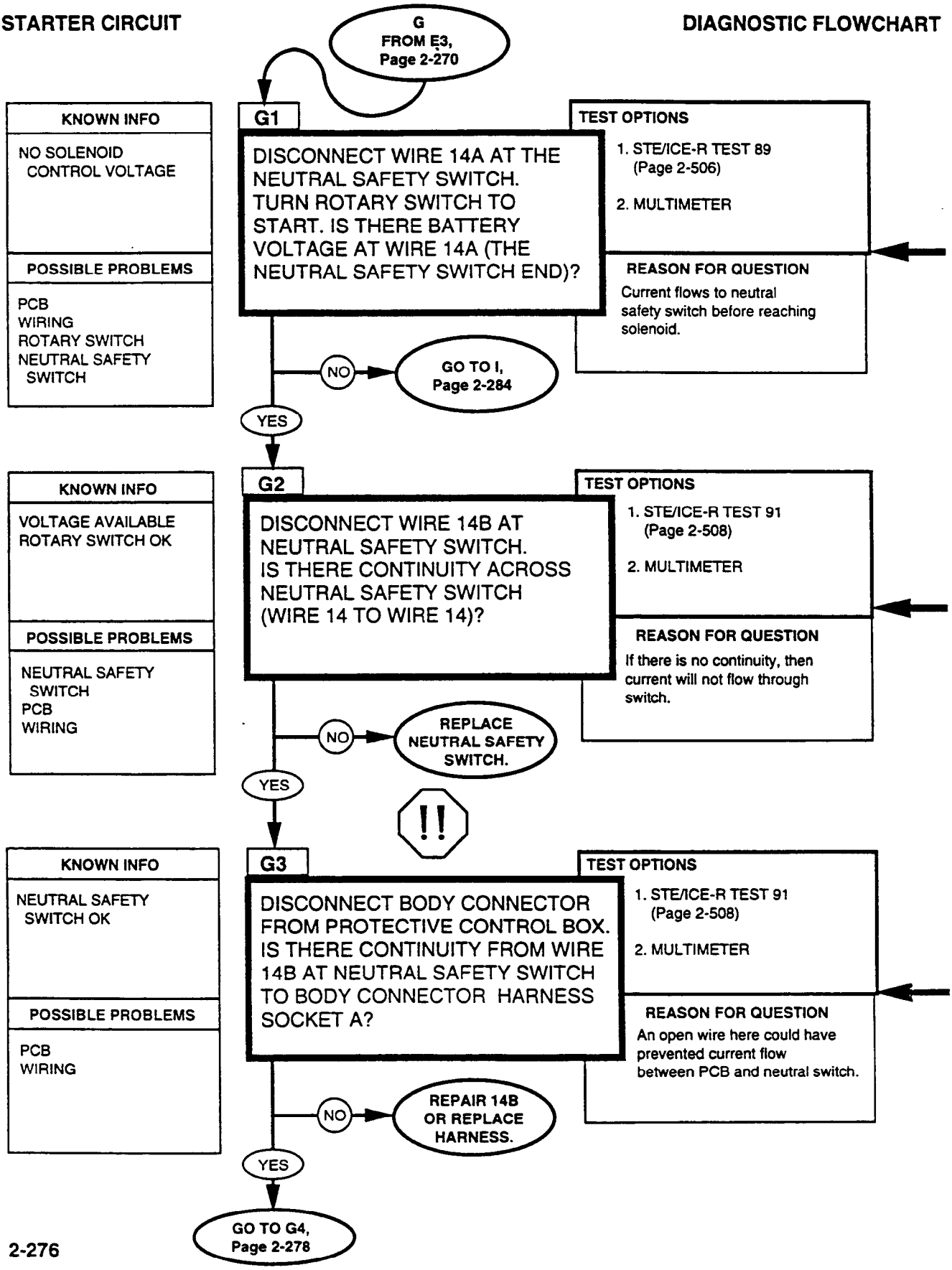

The connections for the neutral safety switch can be reached by removing the engine cover. The connections are near the gear shift lever.

Replace neutral safety switch (refer to para. 5-6).

WARNING

Disconnect negative battery cable before disconnecting and reconnecting PCB harness.

WARNING

There is battery voltage at the PCB at all times. Failure to disconnect battery cable will result in damage to equipment or injury to personnel.

Repair wiring (para. 4-80) or replace switch (para. 5-6).

DC VOLTAGE 0-45 VOLTS
STE/ICE-R TEST 89

1. Connect RED clip to the indicated test point, BLACK clip to negative or ground.
2. Start Test 89, DC volts.
3. Displayed reading is in volts.

VOLTAGE
MULTIMETER

1. Set the voltmeter to a DC volts scale of at least 40 volts.
2. Connect the RED lead to positive and the BLACK lead to negative.
3. Be sure to read the correct scale.

CONTINUITY (RESISTANCE)
MULTIMETER

1. Set the voltmeter to an ohms scale of about 1,000 ohms.
2. Connect the RED and BLACK leads to the connections stated in the question.
3. Be sure to read the correct scale. Less than 5 ohms indicates continuity. For an open circuit, the meter should peg full scale (needle all the way to the left).

RESISTANCE AND CONTINUITY
0-4,500 OHMS
STE/ICE-R TEST 91

1. Connect RED clip and BLACK clip to the terminations indicated in the question. RED to the first, BLACK to the second.
2. Start Test 91, 0-4,500 Ohms.
3. Displayed reading is in ohms. Less than 5 ohms is continuity. If the resistance is over 4,500 ohms, STE/ICE-R displays .9.9.9.9.

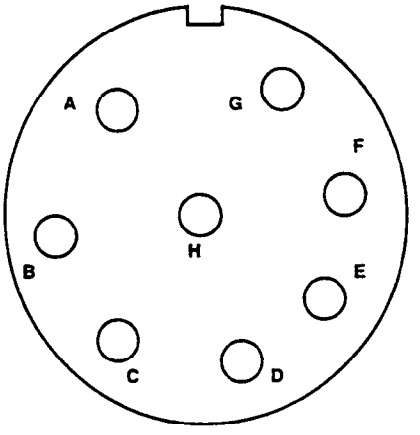

PCB BODY CONNECTOR

STARTER CIRCUIT

DIAGNOSTIC FLOWCHART

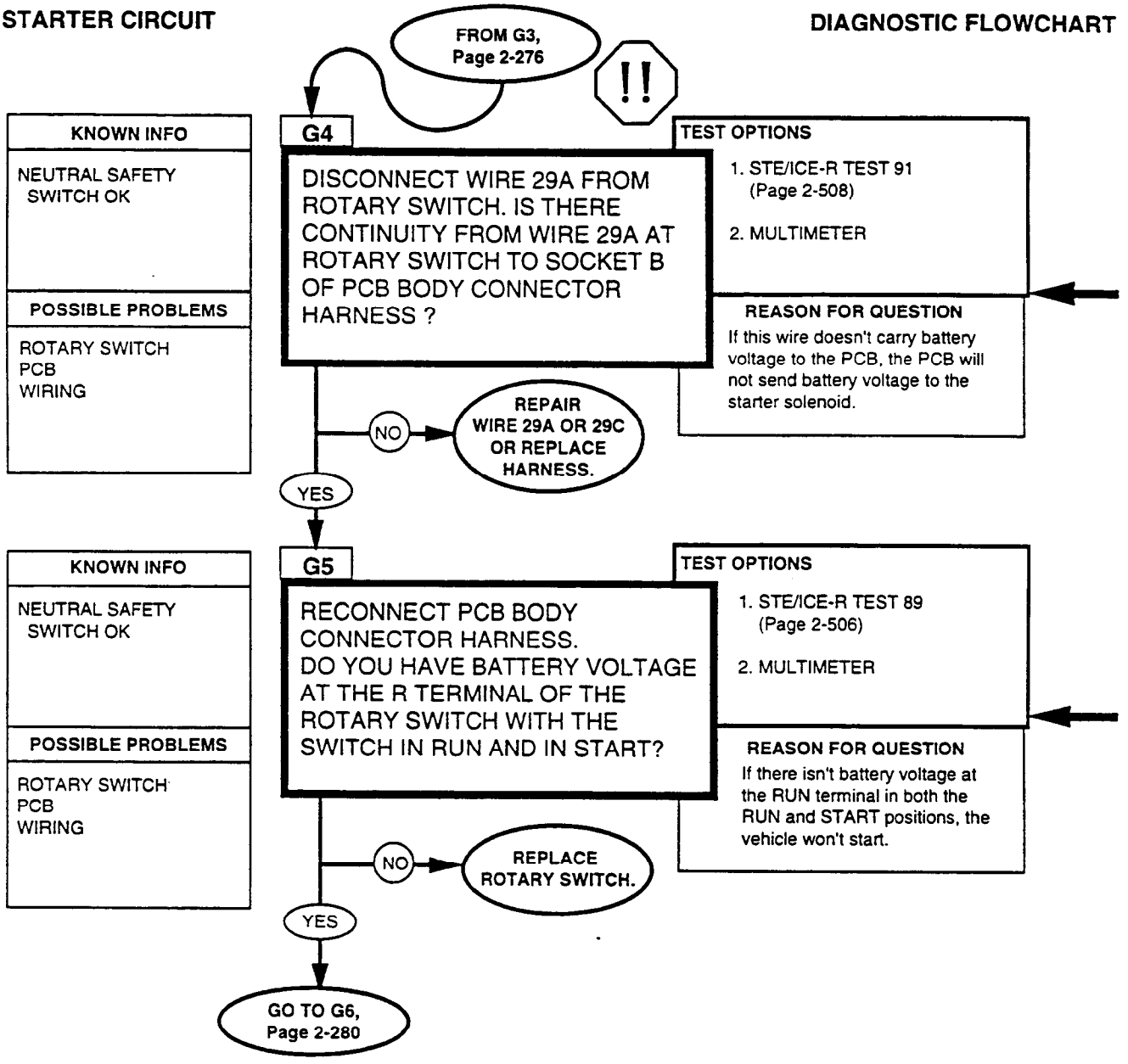

WARNING

Disconnect negative battery cable before disconnecting and reconnecting PCB harness.

WARNING

There is battery voltage at the PCB at all times. Failure to disconnect battery cable will result in damage to equipment or injury to personnel.

Check the wires and connections at both ends for broken wires or any kind of bad connection. Repair whatever you can. If the wires and connections seem ok, you have to replace the harness.

Repair wiring or replace harness (para. 4-80).

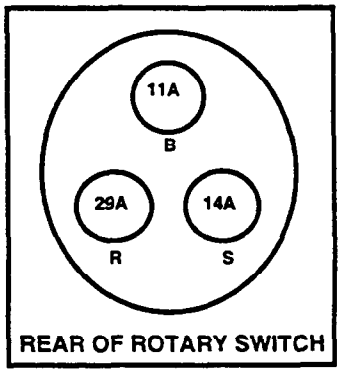

Replace rotary switch (para. 4-10).

DC VOLTAGE 0-45 VOLTS
STE/ICE-R TEST 89

1. Connect RED clip to the indicated test point, BLACK clip to negative or ground.
2. Start Test 89, DC Volts.
3. Displayed reading is in volts.

VOLTAGE MULTIMETER

1. Set the voltmeter to a DC volts scale of at least 40 volts.
2. Connect the RED lead to positive and the BLACK lead to negative.
3. Be sure to read the correct scale.

RESISTANCE AND CONTINUITY
0-4,500 OHMS
STE/ICE-R TEST 91

1. Connect RED clip and BLACK clip to the terminations indicated in the question. RED to the first, BLACK to the second.
2. Start Test 91, 0-4,500 Ohms.
3. Displayed reading is in ohms. Less than 5 ohms is continuity. If the resistance is over 4,500 ohms, STE/ICE-R displays .9.9.9.9.

CONTINUITY (RESISTANCE) MULTIMETER

1. Set the voltmeter to an ohms scale of about 1,000 ohms.
2. Connect the RED and BLACK leads to the connections stated in the question.
3. Be sure to read the correct scale. Less than 5 ohms indicates continuity. For an open circuit, the meter should peg full scale (needle all the way to the left).

STARTER CIRCUIT

DIAGNOSTIC FLOWCHART

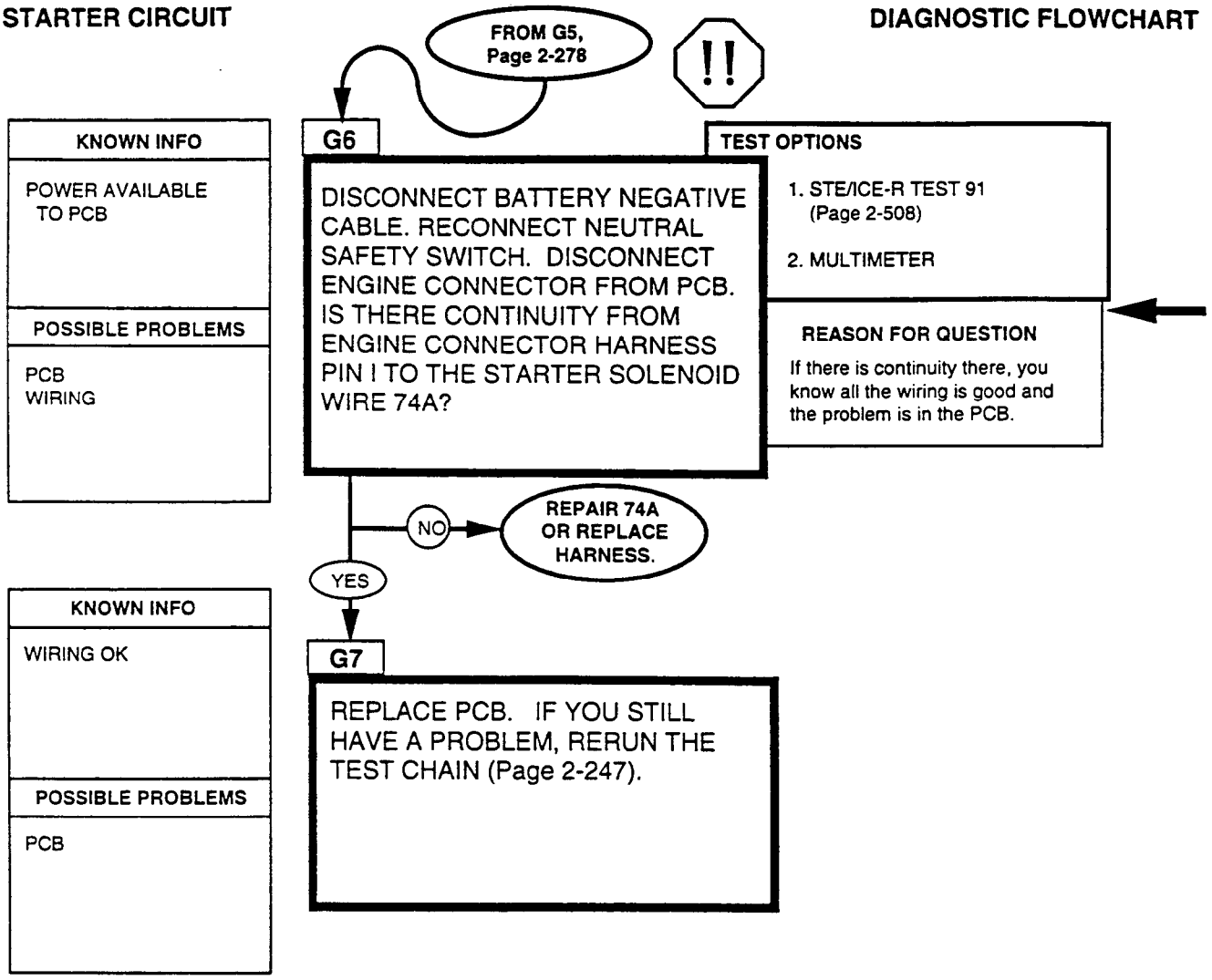

WARNING

Disconnect negative battery cable before disconnecting and reconnecting PCB harness.

WARNING

There is battery voltage at the PCB at all times. Failure to disconnect battery cable will result in damage to equipment or injury to personnel.

Replace harness or PCB (para. 4-4).

RESISTANCE AND CONTINUITY
0-4,500 OHMS
STE/ICE-R TEST 91

1. Connect RED clip and BLACK clip to the terminals indicated in the question.
2. Start Test 91, 0-4,500 Ohms.
3. Displayed reading is in ohms. Less than 5 ohms is continuity. If the resistance is over 4,500 ohms, STE/ICE-R displays .9.9.9.9.

CONTINUITY (RESISTANCE)
MULTIMETER

1. Set the voltmeter to an ohms scale of about 1,000 ohms.
2. Connect the RED and BLACK leads to the connections stated in the question.
3. Be sure to read the correct scale. Less than 5 ohms indicates continuity. For an open circuit, the meter should peg full scale (needle all the way to the left).

STARTER CIRCUIT **DIAGNOSTIC FLOWCHART**

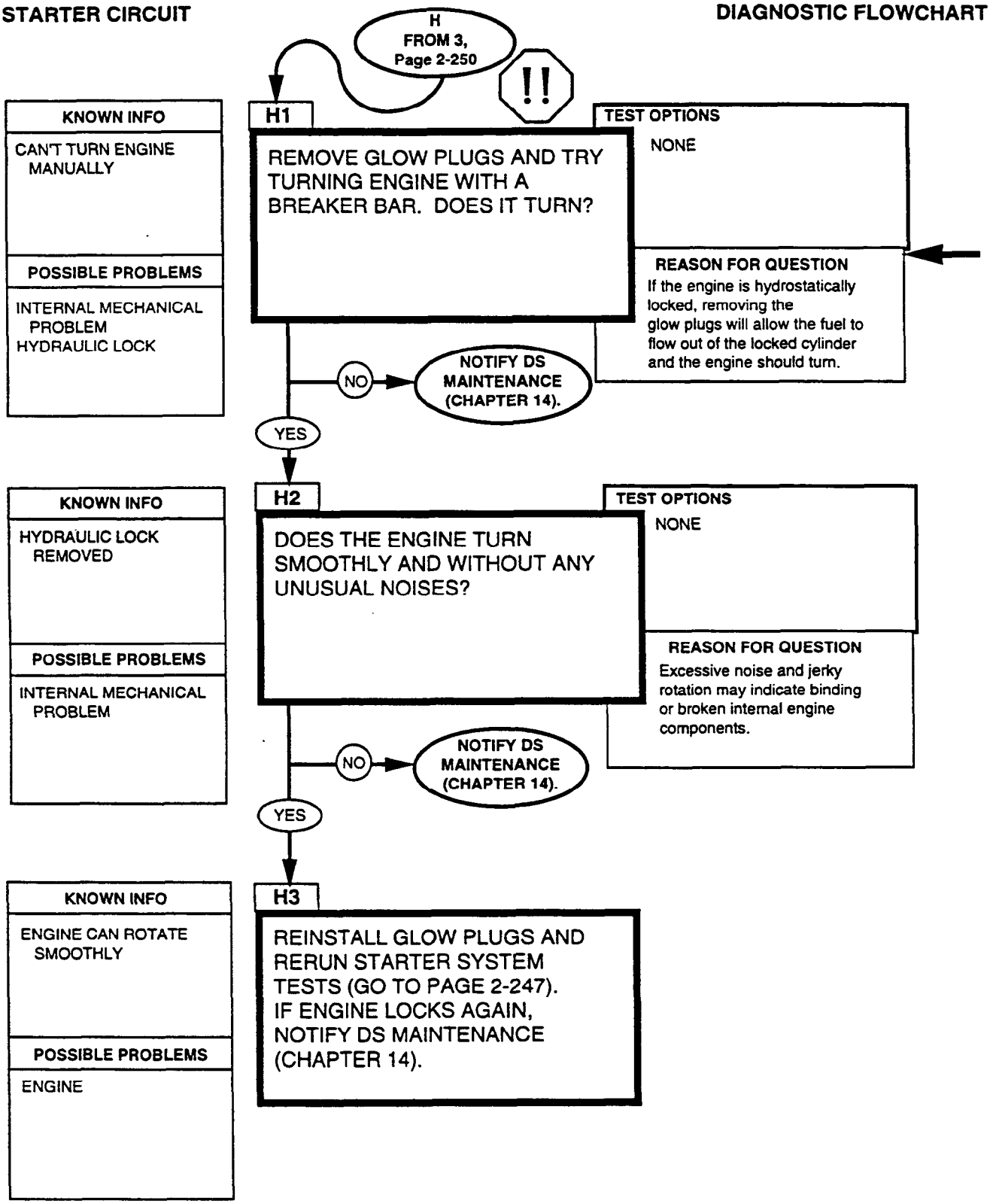

WARNING

Disconnect wire 54A to prevent accidental starting. Failure to do so may result in serious injury or death to personnel.

STARTER CIRCUIT

DIAGNOSTIC FLOWCHART

I
FROM G1,
Page 2-276

I1

KNOWN INFO

NO VOLTAGE AVAILABLE AT NEUTRAL SAFETY SWITCH

POSSIBLE PROBLEMS

ROTARY SWITCH
PCB
WIRING

DISCONNECT WIRE 11A AT ROTARY SWITCH. IS THERE BATTERY VOLTAGE AT WIRE 11A ?

TEST OPTIONS

1. STE/ICE-R TEST 89 (Page 2-506)
2. MULTIMETER

REASON FOR QUESTION

Power must be available to rotary switch.

NO → GO TO J, Page 2-286

YES

I2

KNOWN INFO

BATTERY VOLTAGE AVAILABLE TO ROTARY SWITCH

POSSIBLE PROBLEMS

ROTARY SWITCH
PCB
WIRING

DISCONNECT WIRE 14A AT ROTARY SWITCH. WITH THE ROTARY SWITCH TURNED TO START, IS THERE CONTINUITY BETWEEN THE B STUD AND THE S STUD ?

TEST OPTIONS

1 STE/ICE-R TEST 91 (Page 2-508)
2. MULTIMETER

REASON FOR QUESTION

Continuity here indicates rotary switch is OK.

NO → REPLACE ROTARY SWITCH. RECONNECT 14A AT NEUTRAL SAFETY SWITCH.

YES

I3

KNOWN INFO

ROTARY SWITCH OK

POSSIBLE PROBLEMS

WIRING

REPAIR WIRE 14A OR REPLACE HARNESS.

REFERENCE INFORMATION

STARTER CIRCUIT

VOLTAGE MULTIMETER

1. Set the voltmeter to a DC volts scale of at least 40 volts.
2. Connect the RED lead to positive and the BLACK lead to negative.
3. Be sure to read the correct scale.

CONTINUITY (RESISTANCE) MULTIMETER

1. Set the voltmeter to an ohms scale of about 1,000 ohms.
2. Connect the RED and BLACK leads to the connections stated in the question.
3. Be sure to read the correct scale. Less than 5 ohms indicates continuity. For an open circuit, the meter should peg full scale (needle all the way to the left).

Replace rotary switch (para. 4-10).

DC VOLTAGE 0-45 VOLTS STE/ICE-R TEST 89

1. Connect RED clip to the indicated test point, BLACK clip to negative or ground.
2. Start Test 89, DC Volts.
3. Displayed reading is in volts.

Repair wiring or replace harness (para. 4-80).

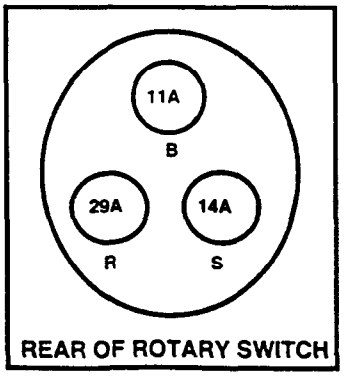

RESISTANCE AND CONTINUITY 0-4,500 OHMS STE/ICE-R TEST 91

1. Connect RED clip and BLACK clip to the terminations indicated in the question. RED to the first, BLACK to the second.
2. Start Test 91, 0-4,500 Ohms.
3. Displayed reading is in ohms. Less than 5 ohms is continuity. If the resistance is over 4,500 ohms, STE/ICE-R displays .9.9.9.9.

STARTER CIRCUIT

DIAGNOSTIC FLOWCHART

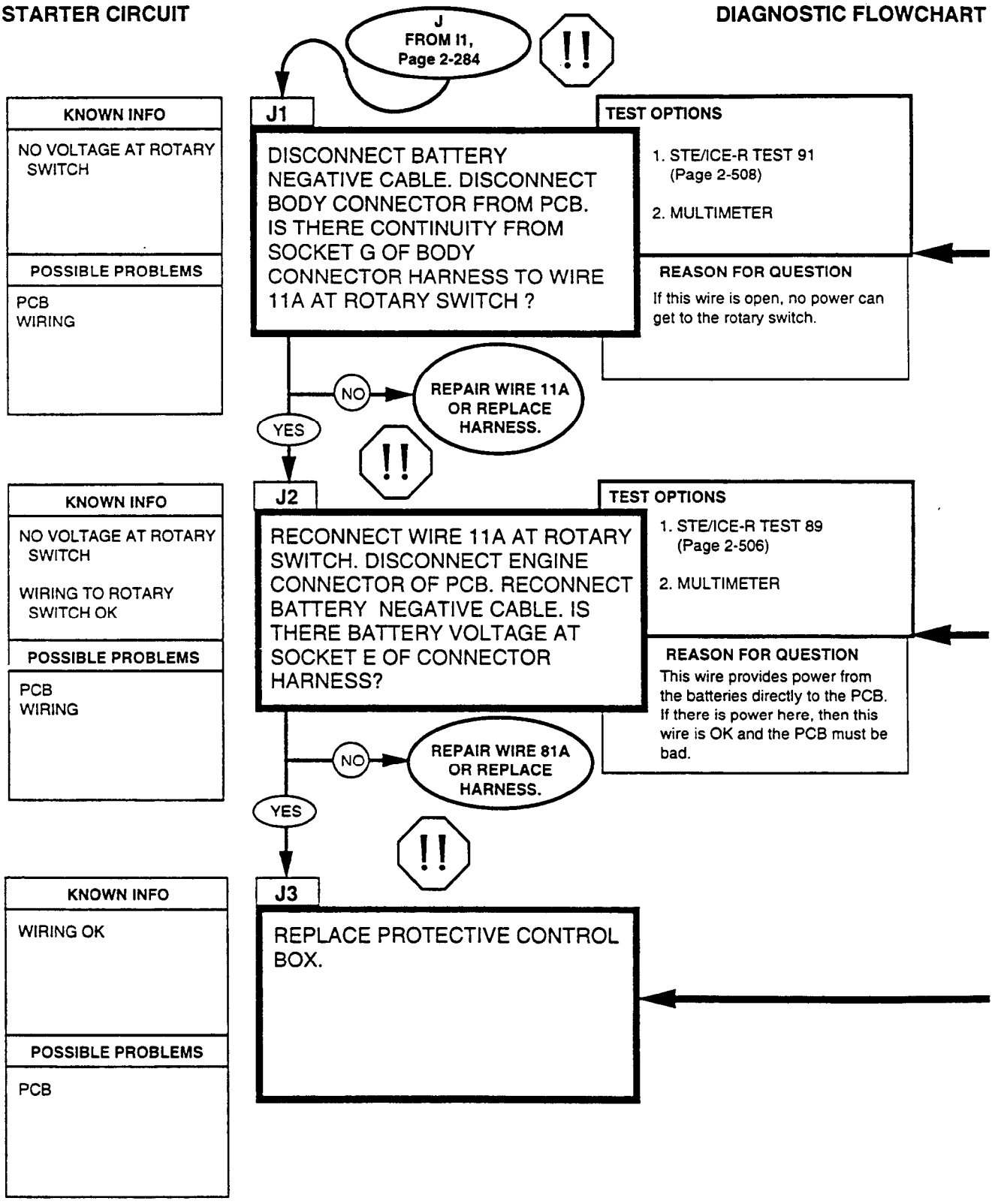

REFERENCE INFORMATION

STARTER CIRCUIT

WARNING

Disconnect negative battery cable before disconnecting and reconnecting PCB harness.

WARNING

There is battery voltage at the PCB at all times. Failure to disconnect battery cable will result in damage to equipment or injury to personnel.

Replace harness or repair wiring (para. 4-80).

VOLTAGE MULTIMETER

1. Set the voltmeter to a DC volts scale of at least 40 volts.
2. Connect the RED lead to positive and the BLACK lead to negative.
3. Be sure to read the correct scale.

WARNING

Disconnect negative battery cable before disconnecting and reconnecting PCB harness.

WARNING

There is battery voltage at the PCB at all times. Failure to disconnect battery cable will result in damage to equipment or injury to personnel.

Replace harness or repair wiring (para. 4-80).

CONTINUITY (RESISTANCE) MULTIMETER

1. Set the voltmeter to an ohms scale of about 1,000 ohms.
2. Connect the RED and BLACK leads to the connections stated in the question.
3. Be sure to read the correct scale. Less than 5 ohms indicates continuity. For an open circuit, the meter should peg full scale (needle all the way to the left).

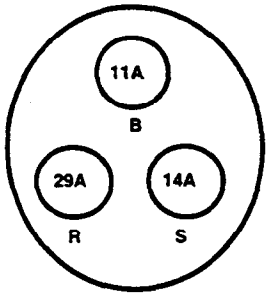

REAR OF ROTARY SWITCH

DC VOLTAGE 0-45 VOLTS STE/ICE-R TEST 89

1. Connect RED clip to the indicated test point, BLACK clip to negative or ground.
2. Start Test 89, DC Volts.
3. Displayed reading is in volts.

WARNING

Disconnect negative battery cable before disconnecting and reconnecting PCB harness.

WARNING

There is battery voltage at the PCB at all times. Failure to disconnect battery cable will result in damage to equipment or injury to personnel.

Replace PCB (refer to para. 4-4).

RESISTANCE AND CONTINUITY 0-4,500 OHMS STE/ICE-R TEST 91

1. Connect RED clip and BLACK clip to the indicated terminals in the question. RED to the first, BLACK to the second.
2. Start Test 91, 0-4,500 Ohms.
3. Displayed reading is in ohms. Less than 5 ohms is continuity. If the resistance is over 4,500 ohms, STE/ICE-R displays .9.9.9.9.

2-37. GLOW PLUGS CIRCUIT TESTS

These tests of the glow plugs circuit can be run any time you think there may be a problem with the glow plugs, or if you were sent here from another test.

If you were sent from another test, be sure to mark where you came from so you will be able to return.

If you are running this test because the engine is hard to start when cold, remember that there is also a cold-start advance circuit (part of the fuel system) which is not checked here.

For any starting problem, we recommend running the STARTABILITY test chain just to be sure you don't miss anything.

At the bottom of this page is a simplified block diagram which shows how the different parts of the glow plug circuit depend on each other and on other engine circuits.

Refer to fold-out page FP-17 and leave it open for reference while performing these tests. The fold-out diagram is arranged to allow you to follow the diagnostic logic and understand what you are testing, when, and why.

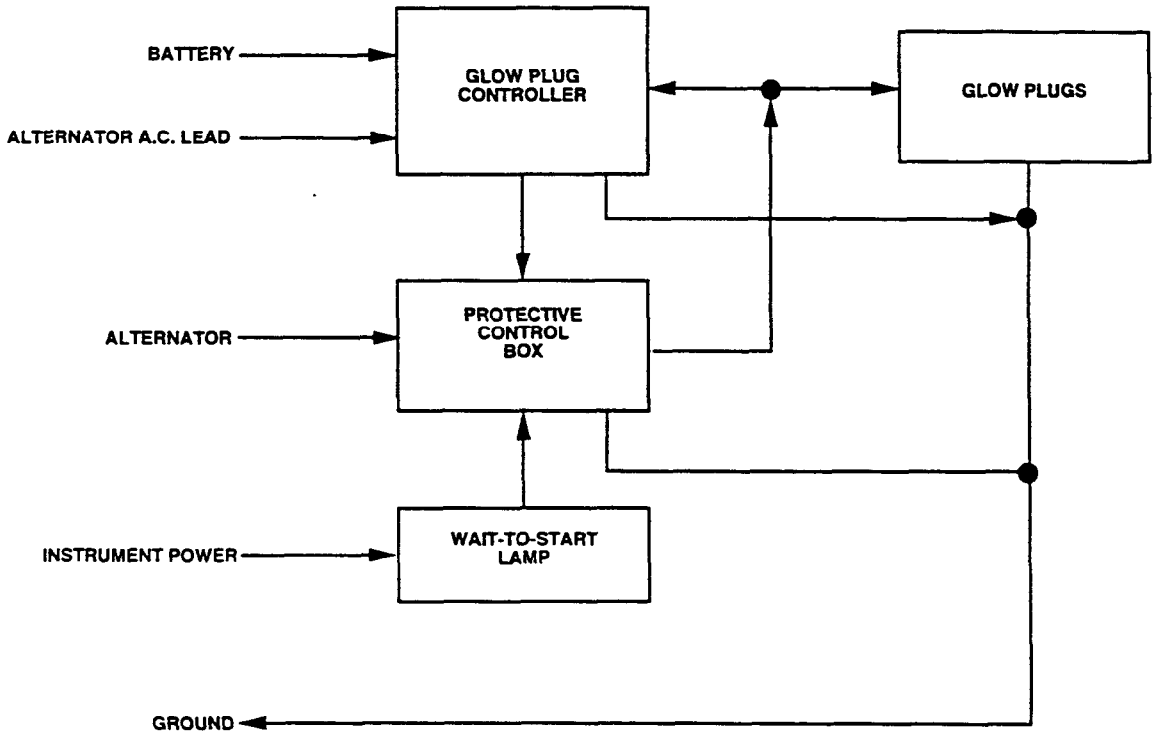

GLOW PLUGS CIRCUIT SIMPLIFIED BLOCK DIAGRAM

GLOW PLUGS CIRCUIT

DIAGNOSTIC FLOWCHART

START

1

KNOWN INFO

NOTHING

POSSIBLE PROBLEMS

GLOW PLUGS
GLOW PLUG CONTROLLER
PCB
CABLES

TO RUN THE GLOW PLUG CIRCUIT TESTS, THE BATTERIES MUST BE IN A GOOD STATE OF CHARGE. IF YOU AREN'T SURE, RUN THE BATTERY CIRCUIT TESTS. IF YOU ARE HERE BECAUSE THE WAIT-TO-START LAMP DOESN'T WORK PROPERLY, SEE THE NOTE ON THE RIGHT-HAND PAGE.

TEST OPTIONS

BATTERY TESTS (Page 2-237)

REASON FOR QUESTION

The glow plugs and their control circuits require battery power to work.

!!

2

KNOWN INFO

BATTERIES OK

POSSIBLE PROBLEMS

GLOW PLUGS
GLOW PLUG CONTROLLER
PCB
CABLES

CHECK ALL THE GLOW PLUG CIRCUIT CONNECTIONS (GLOW PLUGS, GLOW PLUG CONTROLLER, PROTECTIVE CONTROL BOX). ARE ALL THE CONNECTIONS CLEAN AND TIGHT?

TEST OPTIONS

VISUAL

REASON FOR QUESTION

Loose or dirty connections can hinder current flow or cause mixups in the control signals.

NO → REPAIR AS NECESSARY.

YES

3

KNOWN INFO

BATTERIES OK
CABLES/CONNECTIONS SEEM OK

POSSIBLE PROBLEMS

GLOW PLUGS
GLOW PLUG CONTROLLER
PCB
CABLES

TURN THE ROTARY SWITCH TO RUN. DO THE GLOW PLUGS DRAW 75-125 AMPS? (SEE NOTE ON RIGHT-HAND PAGE).

TEST OPTIONS

1. STE/ICE-R TEST 80 (Page 2-505)
2. MULTIMETER

REASON FOR QUESTION

If the current is OK, then the glow plugs and protective control box are OK.

NO → GO TO A, Page 2-294

YES → GO TO 4, Page 2-292

REFERENCE INFORMATION

If the engine cranks ok (or starts), then the batteries are good enough for testing the glow plugs. If the engine starts, shut it off.

You can use STE/ICE Test 10 to measure cranking speed. The engine should crank at least 100 rpm in cold weather and at least 180 rpm in warm weather.

WARNING

Disconnect negative battery cable before disconnecting and reconnecting PCB harness.

WARNING

There is battery voltage at the PCB at all times. Failure to disconnect battery cable will result in damage to equipment or injury to personnel.

BAD CONNECTIONS ARE THE MOST COMMON PROBLEM !

Sometimes just disconnecting, cleaning, and reconnecting will solve a problem. BE THOROUGH! The time you save may be your own. Refer to the functional flow schematic and check the following:

1. BATTERY - make sure all connections are clean and tight, including the shunt and power stud.
2. PROTECTIVE CONTROL BOX - remove BOTH connectors and look for bent or broken pins, pins pushed out of their socket, or dirt and corrosion in the connections.
3. GLOW PLUG CONTROLLER - pop the controller connector off (squeeze the sides) and check the pins in both the controller and the connector. Look for bent, broken or pushed out pins, dirt, or corrosion. Check for broken wires at the connector. Take note that pin 2 of the glow plugs controller connector has no pin in it.
4. GLOW PLUGS - check that all the glow plug wires are snug. Don't just look with your eyes. Many problems are solved by looking with your fingers to be sure a connection is snug.

NORMAL GLOW PLUG OPERATION

The glow plugs first come ON when the engine temperature is below 120 °F (49°C) and the rotary switch is turned to RUN. They stay ON for up to 9 seconds and then go OFF. They will stay OFF for about 7-15 seconds then come ON again for about 1 second.

GLOW PLUGS CIRCUIT

NOTE

The WAIT-TO-START lamp is NOT diagnosed in this section. If the lamp does not work properly, the glow plug circuit may be affecting its operation. Run these tests to check out the glow plug circuit. If the lamp still does not work properly, go to the INSTRUMENT section for a full diagnosis of the lamp's problem.

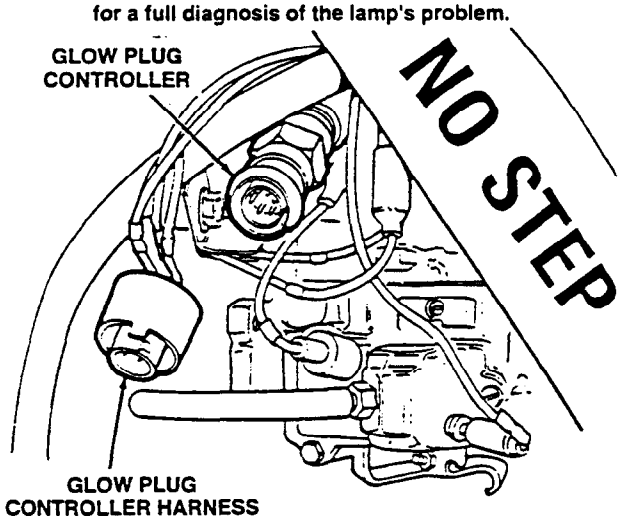

BATTERY CURRENT MULTIMETER
1. Set the voltmeter to a DC volts scale of about 1 volt. 2. Connect the BLACK lead to the battery side of the current shunt and the RED lead to the other end of the current shunt. 3. Current shunt voltage is proportional to battery current, 100 millivolts = 1,000 amps. To get current, multiply millivolts x 10.

BATTERY CURRENT STE/ICE-R TEST 80
1. Start Test 80, Battery Current. 2. Displayed reading is in amps. The reading will be greater then 30 amps, depending on how many accessories you have on.

NOTE

To check for glow plug current draw, start STE/ICE-R Test 80, Battery Current. Turn off all accessories (lights, heater, wipers, etc.). STE/ICE-R should immediately measure at least 74 amps. Take note, however, that if all your glow plugs are working, the current draw should be close to or more than 100 amps, especially if it's cold. If it's near freezing and the glow plugs only draw 75-80 amps, you probably have a few bad glow plugs.

GLOW PLUGS CIRCUIT

DIAGNOSTIC FLOWCHART

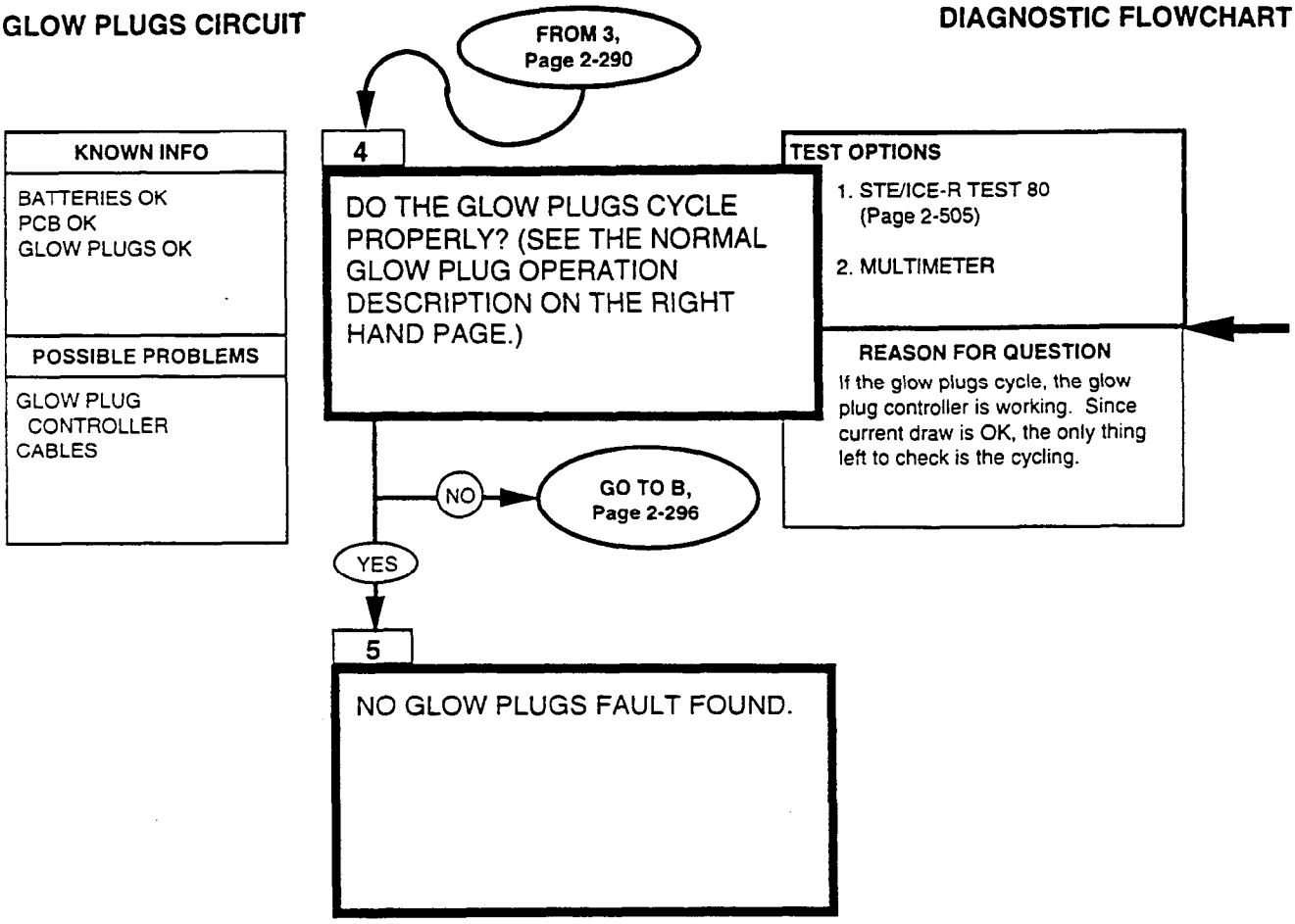

NORMAL GLOW PLUG OPERATION

The glow plugs first come ON when the engine temperature is below 120 °F (49 °C) and the rotary switch is turned to RUN. They stay ON for up to 9 seconds and then go OFF. They will stay OFF for about 7-15 seconds then come ON again for about 1 second, then go OFF again. If you don't start the engine, the glow plugs should keep cycling like this, due to the glow plug cycle timer in the glow plugs controller. If you start the engine, they will cycle until the engine is warm, due to the afterglow cycle timer in the glow plug controller. When the engine gets up to 120°F (49°C), the glow plugs should stop cycling completely.

ENGINE NOT RUNNING, ROTARY SWITCH IN RUN.

If the glow plugs are cycling properly, you should hear a click from the PCB when the glow plugs turn on and when they turn off. This is the glow plug cycle timer, a thermal circuit breaker. A good way to check for cycling is STE/ICE-R test 80, Battery Current. When the glow plugs turn on, STE/ICE-R will measure 74-125 amps. When the glow plugs turn off, the STE/ICE-R will measure 3-8 amps.

ENGINE RUNNING, ROTARY SWITCH IN RUN

If the glow plugs are cycling properly, you can hear a click from the PCB when the glow plugs turn on and when they turn off (you may have to duck your head under the dash). This is the afterglow cycle timer, a thermal circuit breaker. A good way to check for cycling is STE/ICE-R test 80, Battery Current. When the glow plugs turn on, STE/ICE-R will measure 74-125 amps. When the glow plugs turn off, STE/ICE-R will measure 3-8 amps. As the engine gets warmer, the glow plugs turn on less frequently and for less time.

NOTE

If you don't have a STE/ICE-R or a multimeter for measuring current, you can watch the vehicle volts gauge for indication of glow plug operation. The glow plugs draw so much current that the volts gauge should jump about half-an-inch to the left when the glow plugs come on. Before starting the engine, you should hear the glow plug power relay click open and closed as the glow plugs cycle. (You can hear the relay after the engine has started by leaning your head under the dash near the PCB.) This method won't tell you if all the glow plugs are working properly, but it at least shows that the glow plugs are trying to work and that the glow plug power relay is working.

EXPECTED GLOW PLUG CURRENT

ROTARY SWITCH IN RUN POSITION:

GLOW PLUGS ON: 74 - 125 AMPS 74 is only for weak batteries. You should get at least 100 amps when glow plugs are working properly.

GLOW PLUGS OFF: AT or NEAR ZERO With the rotary switch in the RUN position, other parts of the vehicle are drawing current. You might measure up to 8 amps.

BATTERY CURRENT STE/ICE-R TEST 80

1. Start Test 80, Battery Current.
2. Displayed reading is in amps. The reading will be greater then 30 amps, depending on how many accessories you have on.

BATTERY CURRENT MULTIMETER

1. Set the voltmeter to a DC volts scale of about 1 volt.
2. Connect the BLACK lead to the battery side of the current shunt and the RED lead to the other end of the current shunt.
3. Current shunt voltage is proportional to battery current, 100 millivolts = 1,000 amps. To get current, multiply millivolts x 10.

GLOW PLUGS CIRCUIT — DIAGNOSTIC FLOWCHART

A
FROM 3,
Page 2-290

A1

KNOWN INFO

GLOW PLUGS DO NOT DRAW ENOUGH CURRENT

POSSIBLE PROBLEMS

GLOW PLUGS
GLOW PLUG CONTROLLER
CABLES

TURN THE ROTARY SWITCH TO RUN. DO THE GLOW PLUGS DRAW AT LEAST 15 AMPS?

TEST OPTIONS

1. STE/ICE-R TEST 80 (Page 2-505)
2. MULTIMETER

REASON FOR QUESTION

A working glow plug draws 12-15 amps. If at least one glow plug is working, the PCB is OK.

NO → GO TO C, Page 2-298

YES

A2

KNOWN INFO

GLOW PLUGS DRAW SOME BUT NOT ENOUGH CURRENT
PCB OK

POSSIBLE PROBLEMS

GLOW PLUGS
GLOW PLUG CONTROLLER
CABLES

DO THE GLOW PLUGS CYCLE PROPERLY?

TEST OPTIONS

1. STE/ICE-R TEST 80 (Page 2-505)
2. MULTIMETER

REASON FOR QUESTION

If the glow plugs cycle properly, the glow plug controller is OK.

NO → GO TO B, Page 2-296

YES

!!

A3

KNOWN INFO

GLOW PLUGS DRAW SOME BUT NOT ENOUGH CURRENT
PCB OK
GLOW PLUG CONTROLLER OK

POSSIBLE PROBLEMS

GLOW PLUGS
CABLES

CHECK THE GLOW PLUGS AND WIRES USING THE PROCEDURE ON THE RIGHT-HAND PAGE. REPAIR OR REPLACE PARTS AS REQUIRED. RERUN THE MAIN TEST CHAIN.

TEST OPTIONS

SEE THE PROCEDURE ON THE RIGHT-HAND PAGE AND USE:
1. STE/ICE-R TEST 91 (Page 2-508)
2. MULTIMETER

REASON FOR QUESTION

Since the glow plugs draw some current and cycle properly, the only reason they wouldn't draw enough current is that the glow plugs themselves are bad or the wires are no good.

REFERENCE INFORMATION

Dead glow plugs draw virtually no current, but other parts of the vehicle are drawing some current-up to 8 amps. If any glow plugs are drawing any current, then the PCB is probably OK.

For a good description of how glow plugs cycle and how to check for proper cycling, refer to page 2-293.

WARNING

Disconnect negative battery cable before disconnecting and reconnecting PCB harness.

WARNING

There is battery voltage at the PCB at all times. Failure to disconnect battery cable will result in damage to equipment or injury to personnel.

If most or all of the glow plugs are bad, you may also have a problem with the PCB or the glow plug controller which caused them to go bad (usually they burn out from being on too long or not turning off at all). After replacing the bad glow plugs, rerun the glow plugs test chain paying special attention to the glow plugs cycling, especially that they turn OFF when they should.

Replace glow plugs, wires, or harness (para. 3-39).

GLOW PLUGS CIRCUIT

BATTERY CURRENT
STE/ICE-R TEST 80

1. Start Test 80, Battery Current.
2. Displayed reading is in amps. The reading will be greater then 30 amps, depending on how many accessories you have on.

BATTERY CURRENT
MULTIMETER

1. Set the voltmeter to a DC volts scale of about 1 volt.
2. Connect the BLACK lead to the battery side of the current shunt and the RED lead to the other end of the current shunt.
3. Current shunt voltage is proportional to battery current, 100 millivolts = 1,000 amps. To get current, multiply millivolts x 10.

CHECKING GLOW PLUGS & THEIR WIRES

1. Disconnect ALL the glow plugs.
2. Disconnect the negative battery cable. Disconnect the PCB connector harness from the PCB. Reconnect the negative battery cable. Measure the resistance between pin D in the engine connector harness of the PCB and ground. There should NOT be continuity (resistance reading off the scale). If there is continuity, repair or replace the harness.

   Repeat the following for each glow plug:

3.
   a. Reconnect the wiring harness to the glow plug while you repeat the resistance measurement described in step 2. When you reconnect the wire to the glow plug, the resistance should drop to between 1 and 2 ohms (glow plugs are typically 1.6 ohms).

   b. If step A passed:
   disconnect the glowplug again, making sure the resistance goes off scale again. Repeat step A for the next glow plug.

   c. If step A failed:
   then either the glow plug or its wire is no good. Take the wire off the glow plug again and measure the resistance from the glow plug to the engine block. If the resistance is 1 - 2 ohms, then the cable is no good. Otherwise replace the glow plug and check the cable for continuity, just to be sure.

4. Reconnect the PCB and all wires.

GLOW PLUGS CIRCUIT

DIAGNOSTIC FLOWCHART

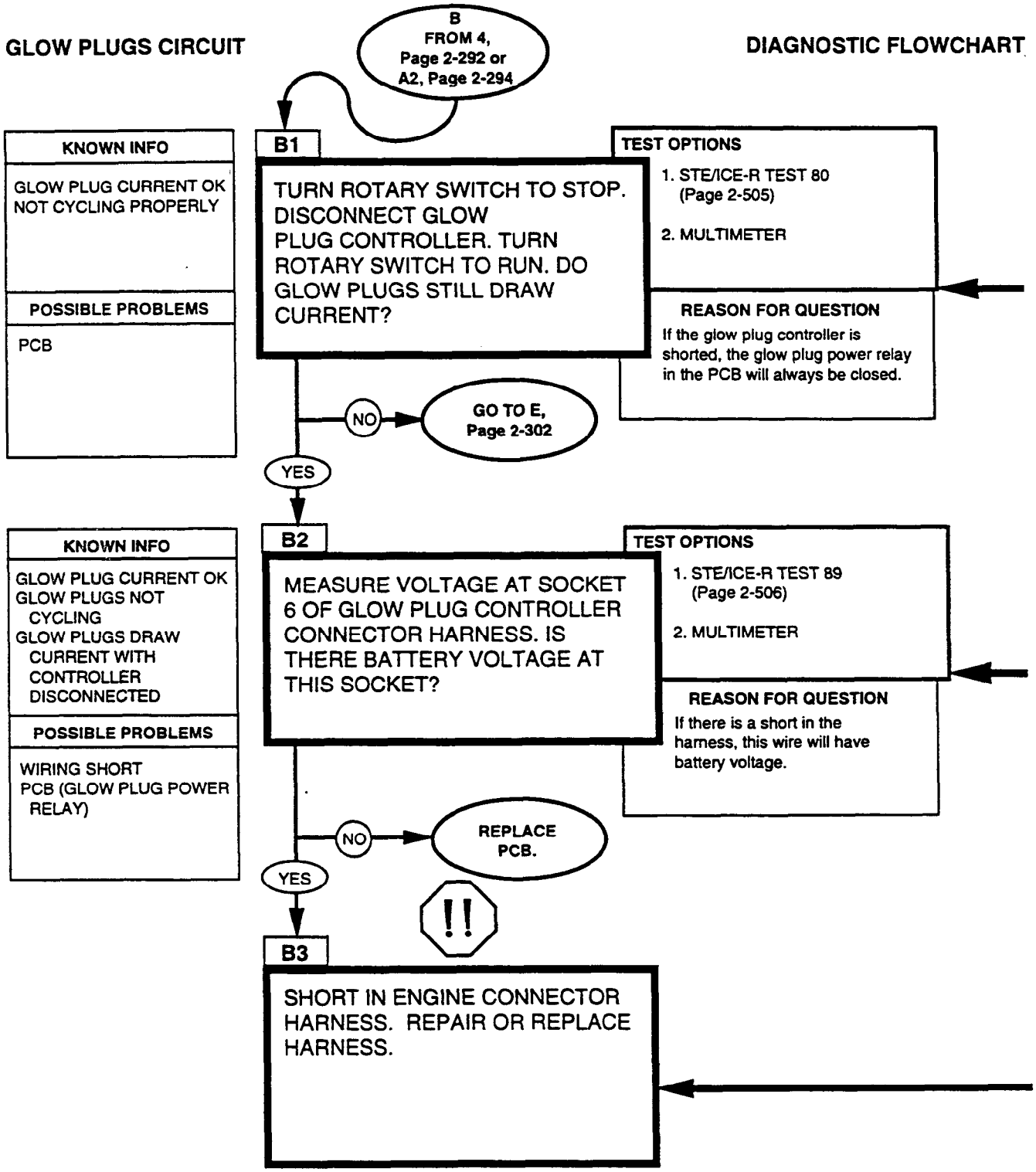

REFERENCE INFORMATION

GLOW PLUGS CIRCUIT

Refer to the functional flow schematic. If the glow plug controller is shorted (continuity from pin 6 to pin 3), the glow plug power relay will always be energized and the glow plugs will always be drawing current.

BATTERY CURRENT STE/ICE-R TEST 80
1. Start Test 80, Battery Current. 2. Displayed reading is in amps. The reading will be greater then 30 amps, depending on how many accessories you have on.

Since the glow plugs draw current without the glow plug controller connected, there must be a short in the harness or a stuck relay in the PCB. If there were a short in the harness directly to the glow plugs, the glow plugs would have burned out long ago and you wouldn't be here. The only other short in the harness that would make the glow plugs turn on without the glow plug controller installed would show up as battery voltage at pin 6 of the controller's connector.

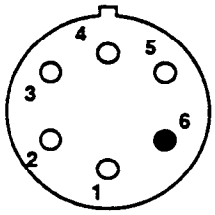

GLOW PLUG CONTROLLER HARNESS SCHEMATIC

Replace PCB (para. 4-4).

Check the end of the harness at the PCB, glow plugs, etc., for shorts. Repair whatever you can. If you don't see anything wrong, the short must be in the main body of the harness, which means that you have to replace the harness.

WARNING

Disconnect negative battery cable before disconnecting and reconnecting PCB harness.

WARNING

There is battery voltage at the PCB at all times. Failure to disconnect battery cable will result in damage to equipment or injury to personnel.

Repair or replace wiring (para. 4-80).

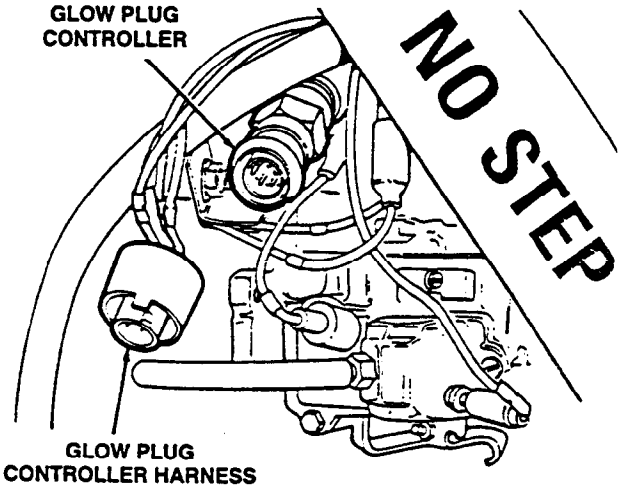

BATTERY CURRENT MULTIMETER
1. Set the voltmeter to a DC volts scale of about 1 volt. 2. Connect the BLACK lead to the battery side of the current shunt and the RED lead to the other end of the current shunt. 3. Current shunt voltage is proportional to battery current, 100 millivolts = 1,000 amps. To get current, multiply millivolts x 10.

DC VOLTAGE 0-45 VOLTS STE/ICE-R TEST 89
1. Connect RED clip to the indicated test point, BLACK clip to negative or ground. 2. Start Test 89, DC Volts. 3. Displayed reading is in volts.

VOLTAGE MULTIMETER
1. Set the voltmeter to a DC volts scale of at least 40 volts. 2. Connect the RED lead to positive and the BLACK lead to negative. 3. Be sure to read the correct scale.

GLOW PLUGS CIRCUIT

DIAGNOSTIC FLOWCHART

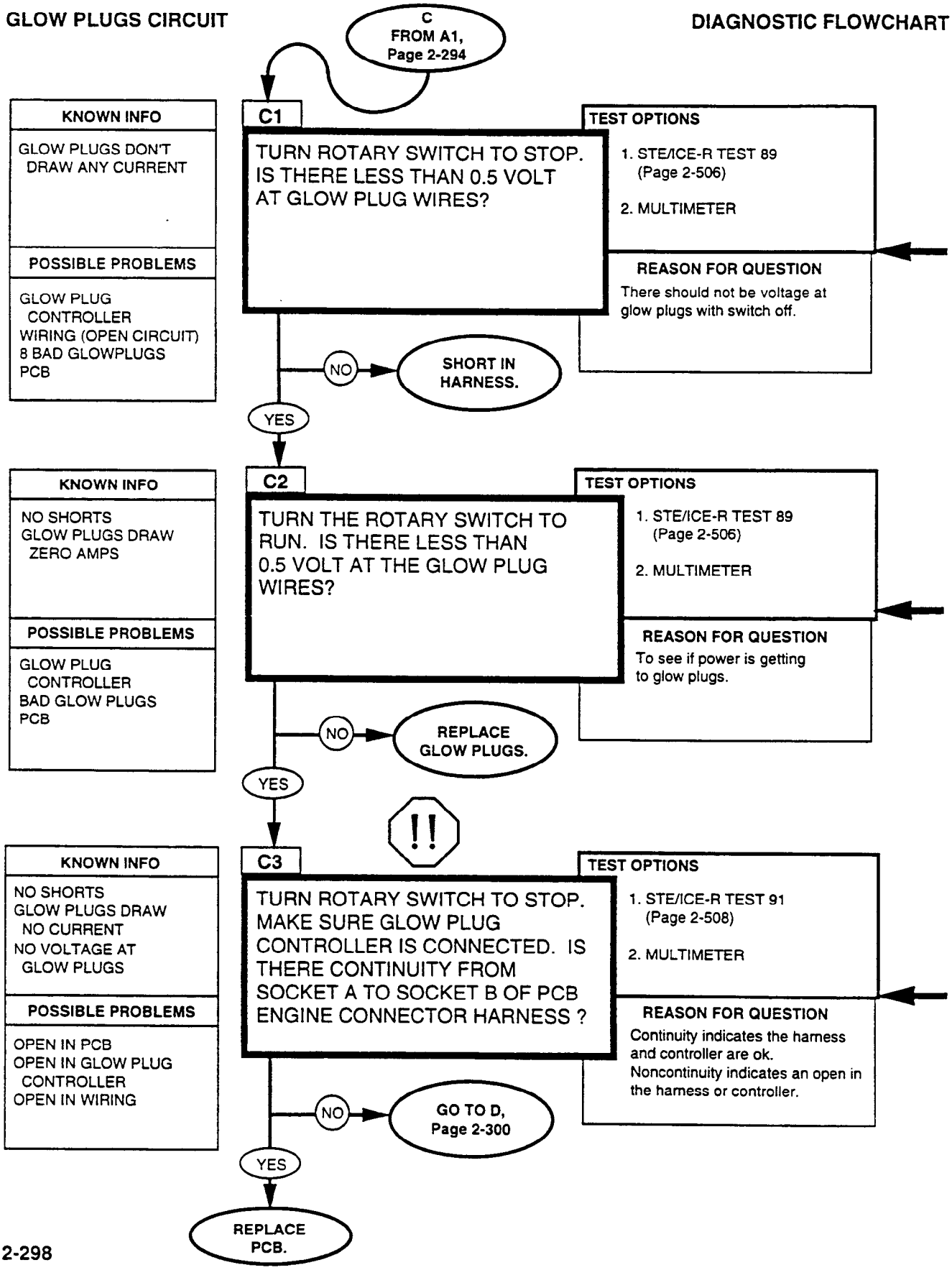

REFERENCE INFORMATION

GLOW PLUGS CIRCUIT

Replace harness. Notify DS maintenance (chapter 18).

Replace glow plugs (para. 3-39).

WARNING

Disconnect negative battery cable before disconnecting and reconnecting PCB harness.

WARNING

There is battery voltage at the PCB at all times. Failure to disconnect battery cable will result in damage to equipment or injury to personnel.

Replace PCB (para. 4-4).

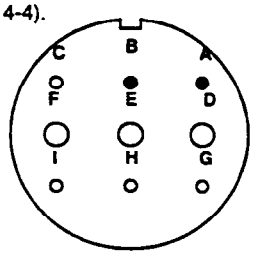

ENGINE CONNECTOR WITH PINS A & B HIGHLIGHTED

DC VOLTAGE 0-45 VOLTS
STE/ICE-R TEST 89

1. Connect RED clip to the indicated test point, BLACK clip to negative or ground.
2. Start Test 89, DC Volts.
3. Displayed reading is in volts.

VOLTAGE
MULTIMETER

1. Set the voltmeter to a DC volts scale of at least 40 volts.
2. Connect the RED lead to positive and the BLACK lead to negative.
3. Be sure to read the correct scale.

RESISTANCE AND CONTINUITY
0-4,500 OHMS
STE/ICE-R TEST 91

1. Connect RED clip and BLACK clip to the indicated test points in the question. RED to the first, BLACK to the second.
2. Start Test 91, 0-4,500 Ohms.
3. Displayed reading is in ohms. Less than 5 ohms is continuity. If the resistance is over 4,500 ohms, STE/ICE-R displays .9.9.9.9.

CONTINUITY (RESISTANCE)
MULTIMETER

1. Set the voltmeter to an ohms scale of about 1,000 ohms.
2. Connect the RED and BLACK leads to the connections stated in the question.
3. Be sure to read the correct scale. Less than 5 ohms indicates continuity. For an open circuit, the meter should peg full scale (needle all the way to the left).

GLOW PLUGS CIRCUIT

DIAGNOSTIC FLOWCHART

D
FROM C3,
Page 2-298; 17, Page 2-224;
24, Page 2-228; 26, Page 2-230

!!

D1

IS THERE CONTINUITY BETWEEN PCB ENGINE CONNECTOR HARNESS SOCKET B AND GLOW PLUG CONTROLLER HARNESS CONNECTOR SOCKET 3?

KNOWN INFO

OPEN CIRCUIT IN GLOW PLUG CONTROLLER OR WIRING

POSSIBLE PROBLEMS

WIRING
GLOW PLUG CONTROLLER

TEST OPTIONS

1. STE/ICE-R TEST 91 (Page 2-508)
2. MULTIMETER

REASON FOR QUESTION

This checks the return wire from the glow plug controller to the Protective Control Box.

NO → REPAIR/REPLACE WIRE 459B.

YES ↓

D2

IS THERE CONTINUITY BETWEEN PCB ENGINE CONNECTOR HARNESS SOCKET A AND GLOW PLUG CONTROLLER HARNESS CONNECTOR SOCKET 6?

KNOWN INFO

OPEN CIRCUIT IN GLOW PLUG CONTROLLER OR WIRING

POSSIBLE PROBLEMS

WIRING
GLOW PLUG CONTROLLER

TEST OPTIONS

1. STE/ICE-R TEST 91 (Page 2-508)
2. MULTIMETER

REASON FOR QUESTION

This checks the main power wire from the PCB to the glow plug controller.

NO → REPLACE WIRE 543 AND/OR 569B.

YES ↓

D3

REPLACE GLOW PLUG CONTROLLER. DOES THE ENGINE START EASILY WHEN COLD?

TEST OPTIONS

TRY IT.

REASON FOR QUESTIONS

You verified that the wiring is OK so the controller must be bad.

NO → GO TO C, Page 2-114

YES ↓

NO FAULTS.

REFERENCE INFORMATION

GLOW PLUGS CIRCUIT

WARNING

Disconnect negative battery cable before disconnecting and reconnecting PCB harness.

WARNING

There is battery voltage at the PCB at all times. Failure to disconnect battery cable will result in damage to equipment or injury to personnel.

Repair/replace wiring (para. 4-80).

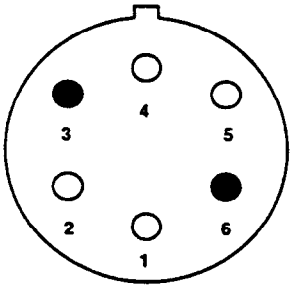

GLOW PLUG CONTROLLER HARNESS WITH SOCKETS 3 AND 6 HIGHLIGHTED

Repair/replace wiring (para. 4-80).

Replace glow plug controller (para. 4-33).

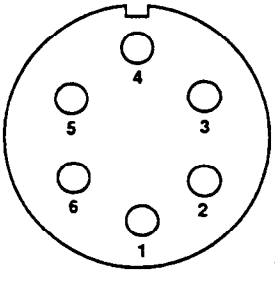

GLOW PLUG CONTROLLER

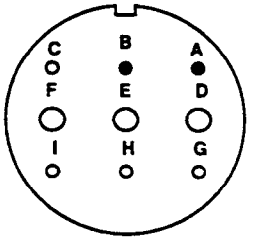

ENGINE CONNECTOR HARNESS WITH SOCKETS A AND B HIGHLIGHTED

RESISTANCE AND CONTINUITY 0-4,500 OHMS STE/ICE-R TEST 91
1. Connect RED clip and BLACK clip to the indicated test points in the question. RED to the first, BLACK to the second. 2. Start Test 91, 0-4,500 Ohms. 3. Displayed reading is in ohms. Less than 5 ohms is continuity. If the resistance is over 4,500 ohms, STE/ICE-R displays .9.9.9.9.

CONTINUITY (RESISTANCE) MULTIMETER
1. Set the voltmeter to an ohms scale of about 1,000 ohms. 2. Connect the RED and BLACK leads to the connections stated in the question. 3. Be sure to read the correct scale. Less than 5 ohms indicates continuity. For an open circuit, the meter should peg full scale (needle all the way to the left).

GLOW PLUGS CIRCUIT

DIAGNOSTIC FLOWCHART

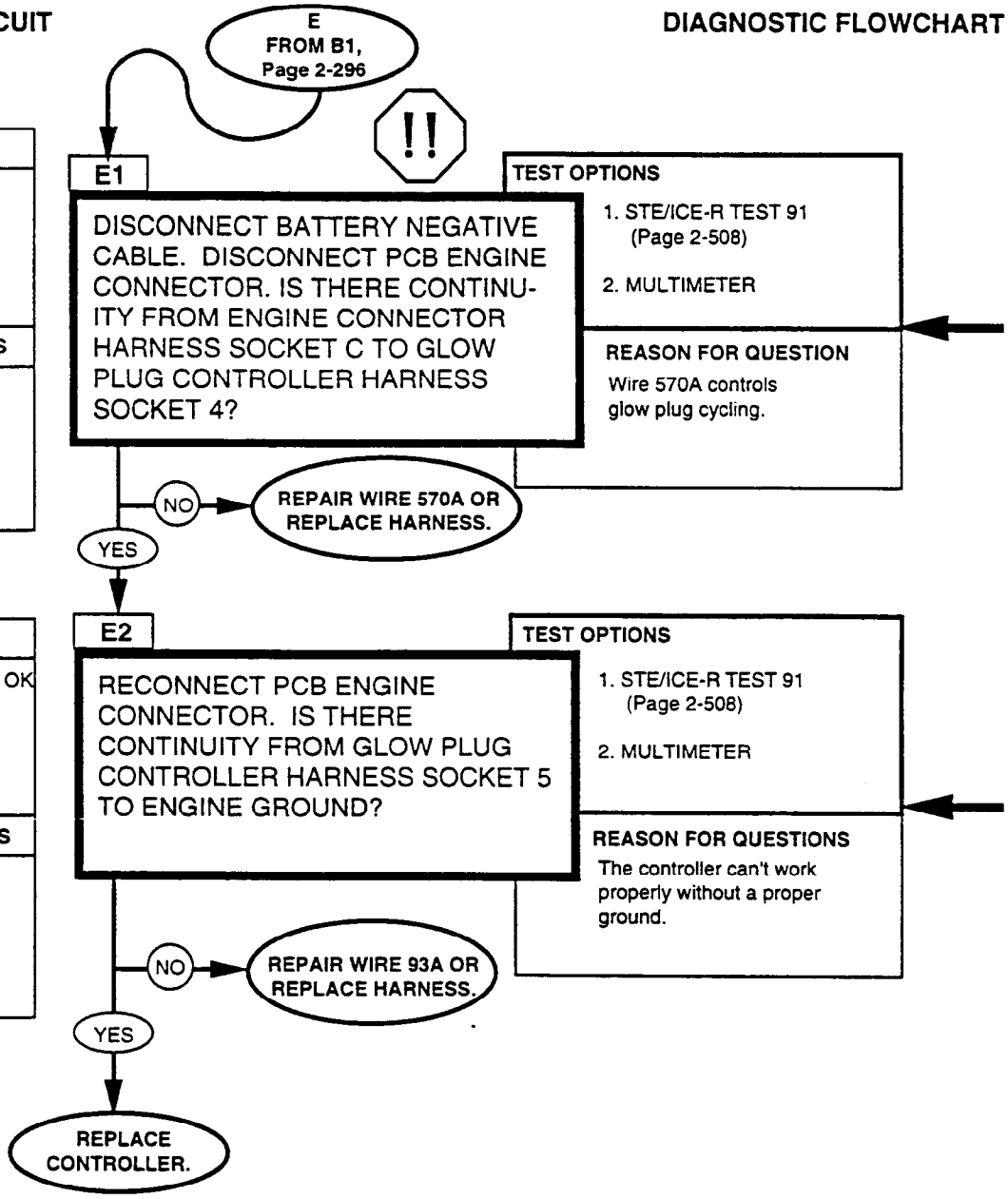

KNOWN INFO
GLOW PLUG CURRENT OK PCB OK GLOW PLUGS NOT CYCLING
POSSIBLE PROBLEMS
WIRING GLOW PLUG CONTROLLER

KNOWN INFO
GLOW PLUG CURRENT OK PCB OK GLOW PLUGS NOT CYCLING
POSSIBLE PROBLEMS
WIRING GLOW PLUG CONTROLLER

REFERENCE INFORMATION

GLOW PLUGS CIRCUIT

WARNING

Disconnect negative battery cable before disconnecting and reconnecting PCB harness.

WARNING

There is battery voltage at the PCB at all times. Failure to disconnect battery cable will result in damage to equipment or injury to personnel.

Repair wiring or replace harness (para. 4-80).

RESISTANCE AND CONTINUITY
0-4,500 OHMS
STE/ICE-R TEST 91

1. Connect RED clip and BLACK clip to the indicated test points in the question. RED to the first, BLACK to the second.
2. Start Test 91, 0-4,500 Ohms.
3. Displayed reading is in ohms. Less than 5 ohms is continuity. If the resistance is over 4,500 ohms, STE/ICE-R displays .9.9.9.9.

Repair wiring or replace harness (para. 4-80).

Replace glow plug controller (para. 4-33).

CONTINUITY (RESISTANCE)
MULTIMETER

1. Set the voltmeter to an ohms scale of about 1,000 ohms.
2. Connect the RED and BLACK leads to the connections stated in the question.
3. Be sure to read the correct scale. Less than 5 ohms indicates continuity. For an open circuit, the meter should peg full scale (needle all the way to the left).

2-38. INSTRUMENTS TESTS

These instrument tests can be run any time you think there is a problem with the instruments or if you were sent here from another test.

If you get an unusual gauge reading, it is a good idea to check out the system that the gauge monitors to be sure that it is a gauge problem and not a real problem in the engine or electrical system.

Refer to fold-out page FP-19 and leave fold-out open for reference during testing. Diagrams of the individual gauge circuits will be found on the page that deals with that circuit.

INSTRUMENTS CIRCUIT

DIAGNOSTIC FLOWCHART

START

1

KNOWN INFO

ONE OR MORE GAUGES AND WARNING LAMPS DON'T WORK

POSSIBLE PROBLEMS

MASTER POWER
INSTRUMENTS
WIRING
SENDING UNITS

WITH THE ROTARY SWITCH IN THE ENGINE STOP POSITION, ARE ALL THE GAUGES IN THE OFF POSITION AND WARNING LAMPS OFF?

TEST OPTIONS

VISUAL

REASON FOR QUESTION

If any of the gauges or lamps are functioning, then the electrical system is partially powered in the OFF position.

NO → GO TO A, Page 2-314

YES

2

KNOWN INFO

NO POWER TO THE GAUGES WITH THE ROTARY SWITCH IN THE OFF POSITION

POSSIBLE PROBLEMS

MASTER POWER
INSTRUMENTS
WIRING
SENDING UNITS

TURN THE ROTARY SWITCH OFF. DISCONNECT THE GLOW PLUG CONTROLLER. WITH THE ROTARY SWITCH IN THE RUN POSITION, DO ANY OF THE GAUGES AND WARNING LAMPS FUNCTION?

TEST OPTIONS

VISUAL

REASON FOR QUESTION

If any of the devices work, the master power circuit works.

NO → GO TO B, Page 2-316

YES

3

KNOWN INFO

POWER AVAILABLE TO GAUGES AND WARNING LAMPS

POSSIBLE PROBLEMS

INSTRUMENTS
WIRING
SENDING UNITS

TURN THE ROTARY SWITCH OFF. RECONNECT THE GLOW PLUG CONTROLLER. TURN THE ROTARY SWITCH ON. DOES THE WAIT-TO-START LAMP COME ON AT ANY TIME? (ENGINE TEMPERATURE MUST BE BELOW 120 °F (49°C)).

TEST OPTIONS

VISUAL

REASON FOR QUESTION

If the wait-to-start light comes on at any time, the circuit is being powered.

NO → GO TO C, Page 2-318

YES → GO TO 4, Page 2-308

REFERENCE INFORMATION

INSTRUMENTS CIRCUIT

None of the following instruments and accessories should work when the rotary switch is in the STOP position:

- Voltmeter
- Wait-to-start lamp
- Temperature gauge
- Oil pressure gauge
- Fuel gauge
- Windshield wiper/washer
- Brake warning lamp

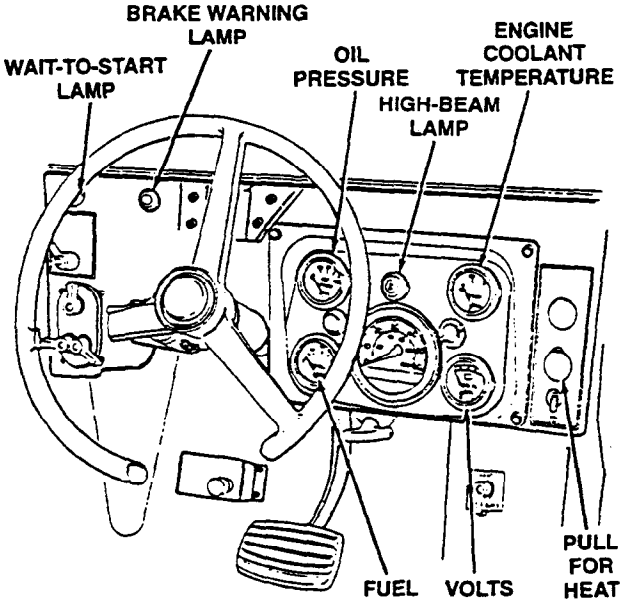

If any of the instruments and accessories work when the rotary switch is in the RUN position, power is available and the circuit breaker is OK.

The wait-to-start lamp is not an accurate indication of glow plug operation. Make sure the glow plugs are operating properly BEFORE you check out the light. Go to the glow plugs circuit tests, page 2-289. Return here if the light still doesn't operate properly.

The wait-to-start lamp should come on when the engine is below 120°F (49°C) and the rotary switch is first turned to the RUN position.

INSTRUMENTS CIRCUIT

DIAGNOSTIC FLOWCHART

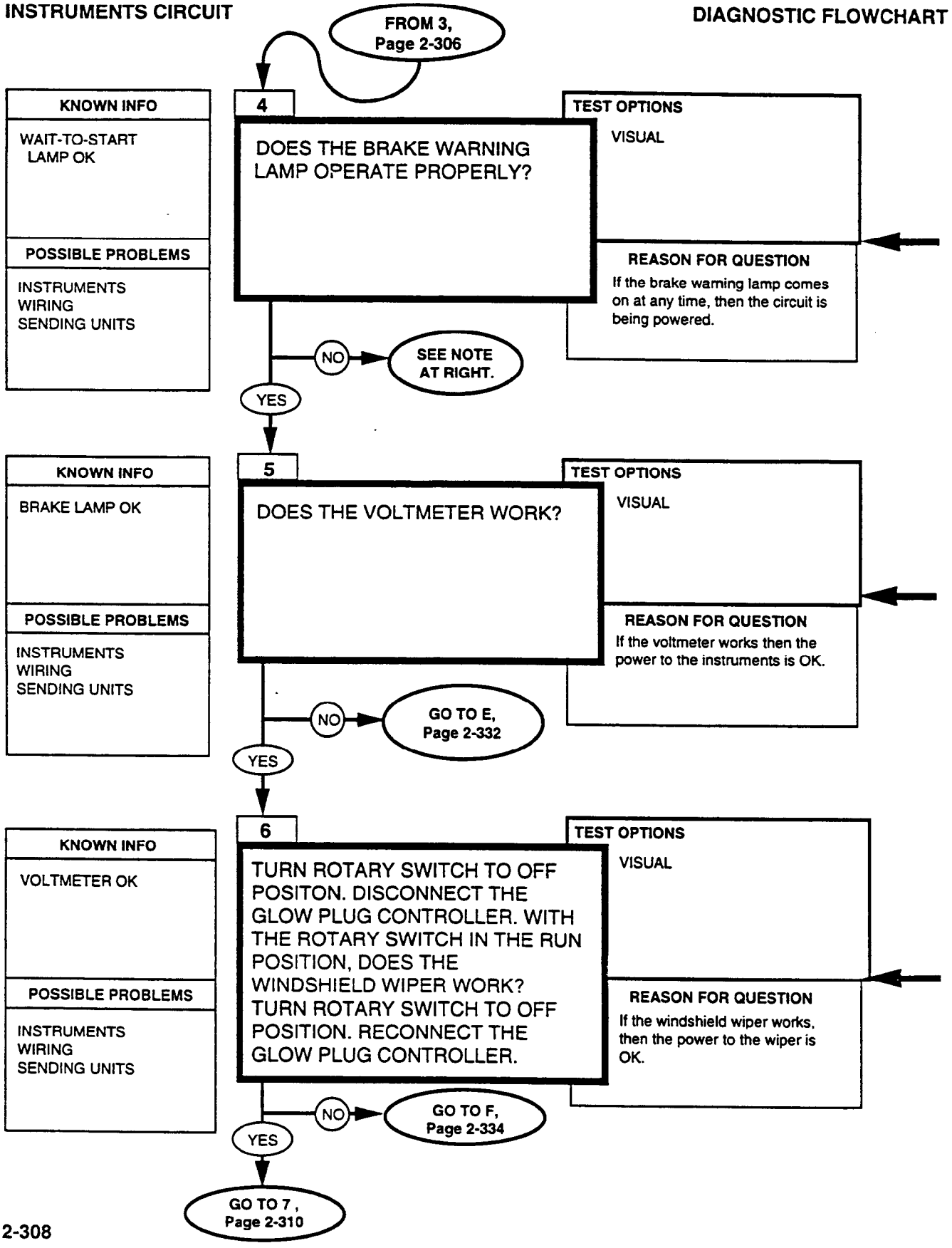

The brake warning lamp should come on when the engine is cranking, the parking brake is set, or there is a failure in the brake system. If brake warning lamp stays on, go to 1, page 2-328. If the warning lamp does not come on, go to D, page 2-324.

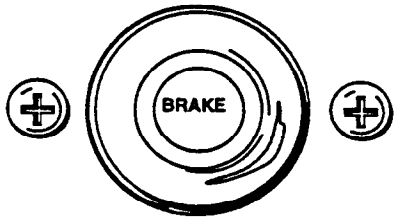

BRAKE WARNING LAMP

The voltmeter may be checked by running STE/ICE-R Test 67 with the engine running. The position in the center of the green area of the volt gauge marked GEN is approximately 28 volts.

The voltmeter is a galvanometer-type gauge. It is conceivable that the coil in the gauge may have a broken wire that only opens when the gauge is heated up. If you are having an intermittent gauge problem, leave the vehicle running for a while and watch the gauge.

If the charging system is ok, but the gauge is reading full scale one way or the other, you may have this type of problem.

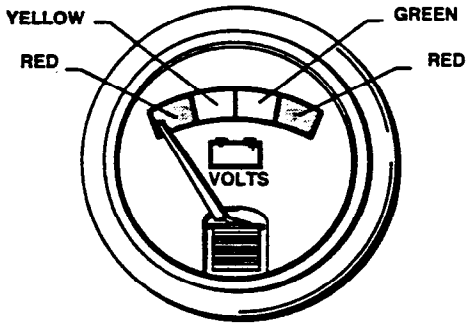

VOLTMETER

Rotary switch has to be in the RUN position for the windshield wiper or washer to operate.

INSTRUMENTS CIRCUIT **DIAGNOSTIC FLOWCHART**

FROM 6, Page 2-308

7

WITH THE IGNITION SWITCH IN THE RUN POSITION, DOES THE FUEL GAUGE WORK PROPERLY ?

KNOWN INFO

WINDSHIELD WIPERS OK

POSSIBLE PROBLEMS

FUEL GAUGE
OIL PRESSURE GAUGE
TEMPERATURE GAUGE
WIRING
SENDING UNITS

TEST OPTIONS

VISUAL

REASON FOR QUESTION

If the fuel gauge works, the power to the gauge is OK.

NO → GO TO G, Page 2-338

YES

8

DOES THE ENGINE OIL PRESSURE GAUGE WORK WITH THE ENGINE RUNNING?

KNOWN INFO

FUEL GAUGE OK

POSSIBLE PROBLEMS

FUEL GAUGE
OIL PRESSURE GAUGE
TEMPERATURE GAUGE
WIRING
SENDING UNITS

TEST OPTIONS

VISUAL

REASON FOR QUESTION

If the oil pressure gauge works, then the power to the gauge is OK.

NO → GO TO H, Page 2-342

YES

9

DOES THE ENGINE TEMPERATURE GAUGE WORK WITH THE ENGINE WARM?

KNOWN INFO

OIL PRESSURE GAUGE OK

POSSIBLE PROBLEMS

TEMPERATURE GAUGE
WIRING
SENDING UNITS

TEST OPTIONS

VISUAL

REASON FOR QUESTION

If the temperature gauge works, the power to the gauge is OK.

NO → GO TO I, Page 2-346

YES → GO TO 10, Page 2-312

REFERENCE INFORMATION

INSTRUMENTS CIRCUIT

These gauges are galvanometer-type gauges. It is conceivable that the coil in the gauge may have a broken wire that only opens when the gauge is warmed up. If you are having an intermittent gauge problem, leave the vehicle running for a while and watch the gauge. If the system the gauge monitors is OK, but the gauge is reading full scale one way or the other, then you may have this type of problem.

Fill the fuel tank, if necessary, to obtain a reading greater than empty.

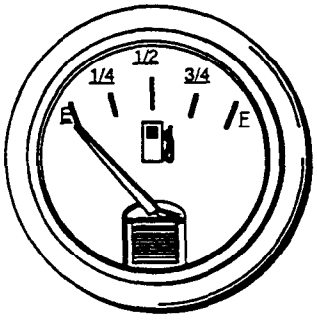

FUEL GAUGE

With the engine running, the oil pressure should be approximately 10 psi (69 kPa) at idle, 40-45 psi (276-310 kPa) at 2,000 rpm, and it should be 0 when stopped.

Make sure shift lever is in neutral before running this test.

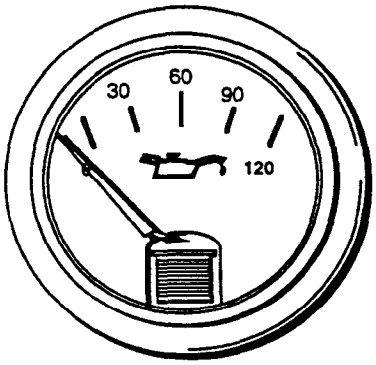

OIL PRESSURE GAUGE

With the engine cold, the gauge should read off scale to the left and, when warm, the reading should be 190°- 230°F (88° - 110°C).

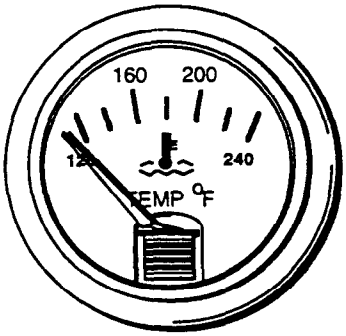

TEMPERATURE GAUGE

INSTRUMENTS CIRCUIT

DIAGNOSTIC FLOWCHART

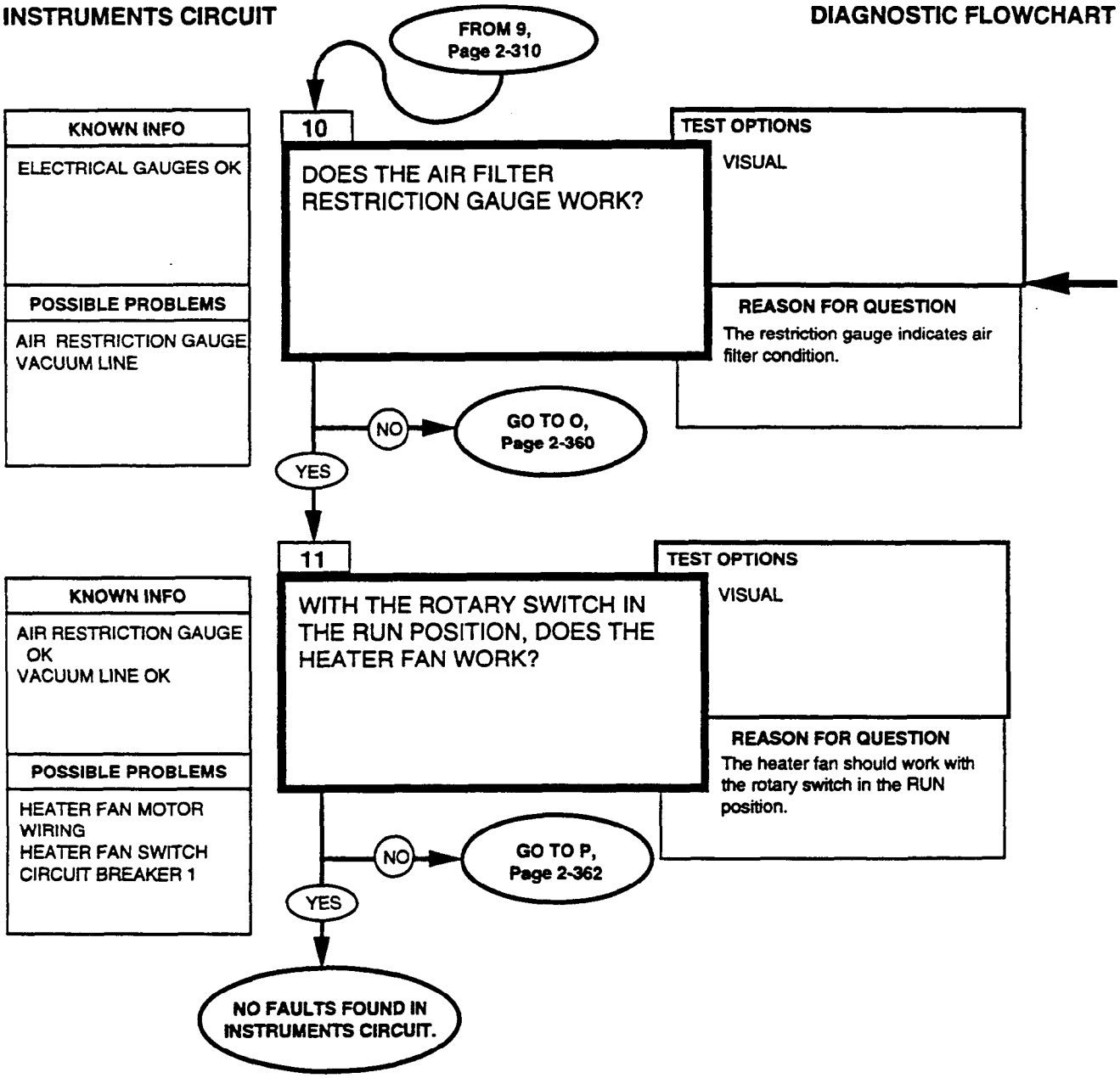

When vacuum is applied to the line at the air filter, the gauge should read yellow and hold the reading until it is released by pressing the reset button on the gauge.

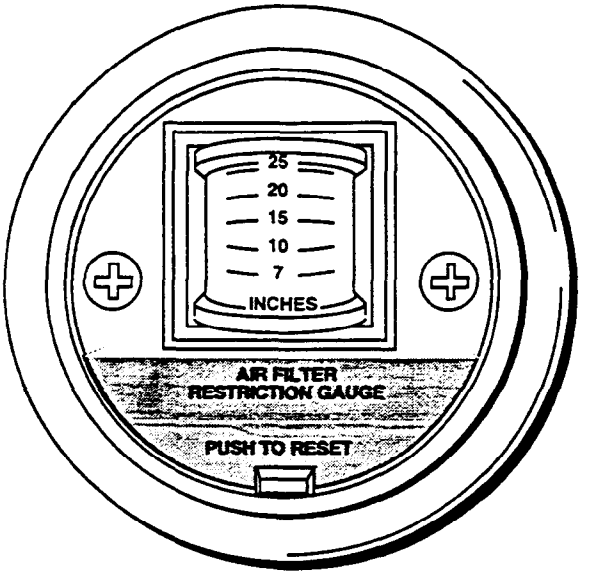

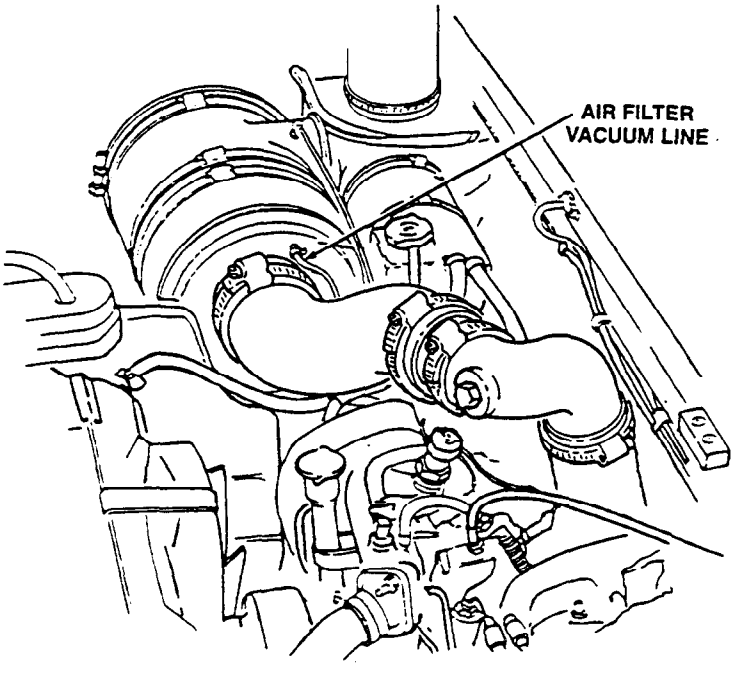

INSTRUMENTS CIRCUIT

DIAGNOSTIC FLOWCHART

A
FROM 1,
Page 2-306

A1

KNOWN INFO

SOME GAUGES AND LAMPS HAVE POWER WHEN THEY SHOULDN'T

POSSIBLE PROBLEMS

ROTARY SWITCH
WIRING

DISCONNECT WIRE 29B FROM CIRCUIT BREAKER 2. WITH THE ROTARY SWITCH IN THE OFF POSITION, DO YOU HAVE 0 VOLTAGE AT WIRE 29B?

TEST OPTIONS

1. STE/ICE-R TEST 89 (Page 2-506)
2. MULTIMETER

REASON FOR QUESTION

Voltage here indicates a short circuit to power.

NO → GO TO J, Page 2-350

YES ↓

A2

KNOWN INFO

ROTARY SWITCH OK

POSSIBLE PROBLEMS

WIRING

DISCONNECT WIRE 29D FROM CIRCUIT BREAKER 2. WITH THE ROTARY SWITCH IN THE OFF POSITION, DO YOU HAVE 0 VOLTAGE AT WIRE 29D?

TEST OPTIONS

1. STE/ICE-R TEST 89 (Page 2-506)
2. MULTIMETER

REASON FOR QUESTION

Voltage here indicates a short circuit to power.

NO → REPAIR SHORT 29D OR 27F,G,H,L,K or 567A OR REPLACE HARNESS.

YES ↓

A3

KNOWN INFO

NO SHORTS TO POWER

POSSIBLE PROBLEMS

WIRING

CHECK CONTINUITY FROM ALL GAUGE GROUND TERMINALS TO ENGINE GROUND (WIRES 58E-H). DO YOU HAVE CONTINUITY?

TEST OPTIONS

1. STE/ICE-R TEST 91 (Page 2-508)
2. MULTIMETER

REASON FOR QUESTION

A good ground circuit is necessary for proper gauge operation.

NO → REPAIR 58E-H OR REPLACE HARNESS.

YES ↓

SEE NOTE AT RIGHT.

REFERENCE INFORMATION

INSTRUMENTS CIRCUIT

The easiest way to reach the circuit breaker and gauge wiring is to remove the gauge panel screws and pull the panel out far enough to work with the wiring.

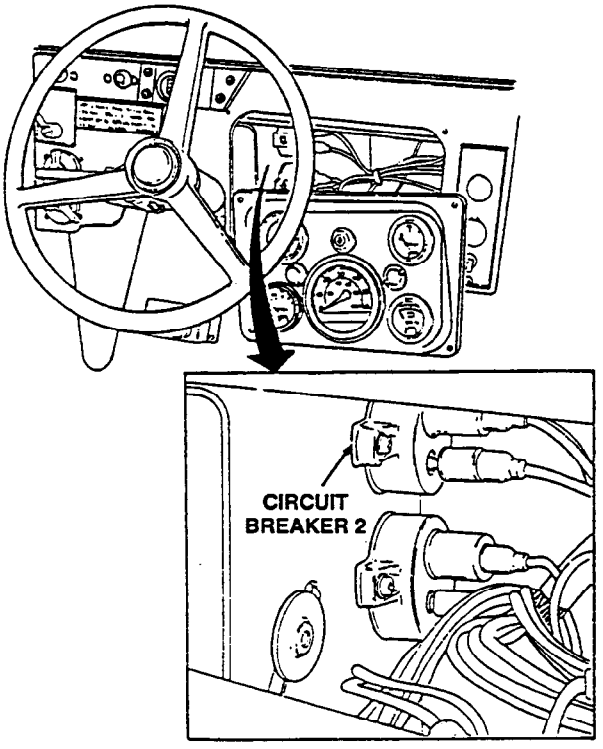

Replace harness or repair wiring (para. 4-80).

Connect the BLACK test lead to a good engine ground and connect the RED test lead to each gauge ground terminal (the uninsulated screw) one at a time and note each reading.

You have checked all the wiring that is common to all the gauges and warning lamps. Reconnect wires and return to step 2, page 2-306, and continue testing.

DC VOLTAGE 0-45 VOLTS
STE/ICE-R TEST 89

1. Connect RED clip to the indicated test point, BLACK clip to negative or ground.
2. Start Test 89, DC Volts.
3. Displayed reading is in volts.

BATTERY VOLTAGE
MULTIMETER

1. Set the voltmeter to a DC volts scale of at least 40 volts.
2. Connect the RED lead to positive and the BLACK lead to negative.
3. Be sure to read the correct scale.

RESISTANCE AND CONTINUITY
0-4,500 OHMS
STE/ICE-R TEST 91

1. Connect RED clip and BLACK clip to the indicated terminals in the question. RED to the first, BLACK to the second.
2. Start Test 91, 0-4,500 Ohms.
3. Displayed reading is in ohms. Less than 5 ohms is continuity. If the resistance is over 4,500 ohms, STE/ICE-R displays .9.9.9.9.

CONTINUITY (RESISTANCE)
MULTIMETER

1. Set the voltmeter to an ohms scale of about 1,000 ohms.
2. Connect the RED and BLACK leads to the connections stated in the question.
3. Be sure to read the correct scale. Less than 5 ohms indicates continuity. For an open circuit, the meter should peg full scale (needle all the way to the left).

INSTRUMENTS CIRCUIT

DIAGNOSTIC FLOWCHART

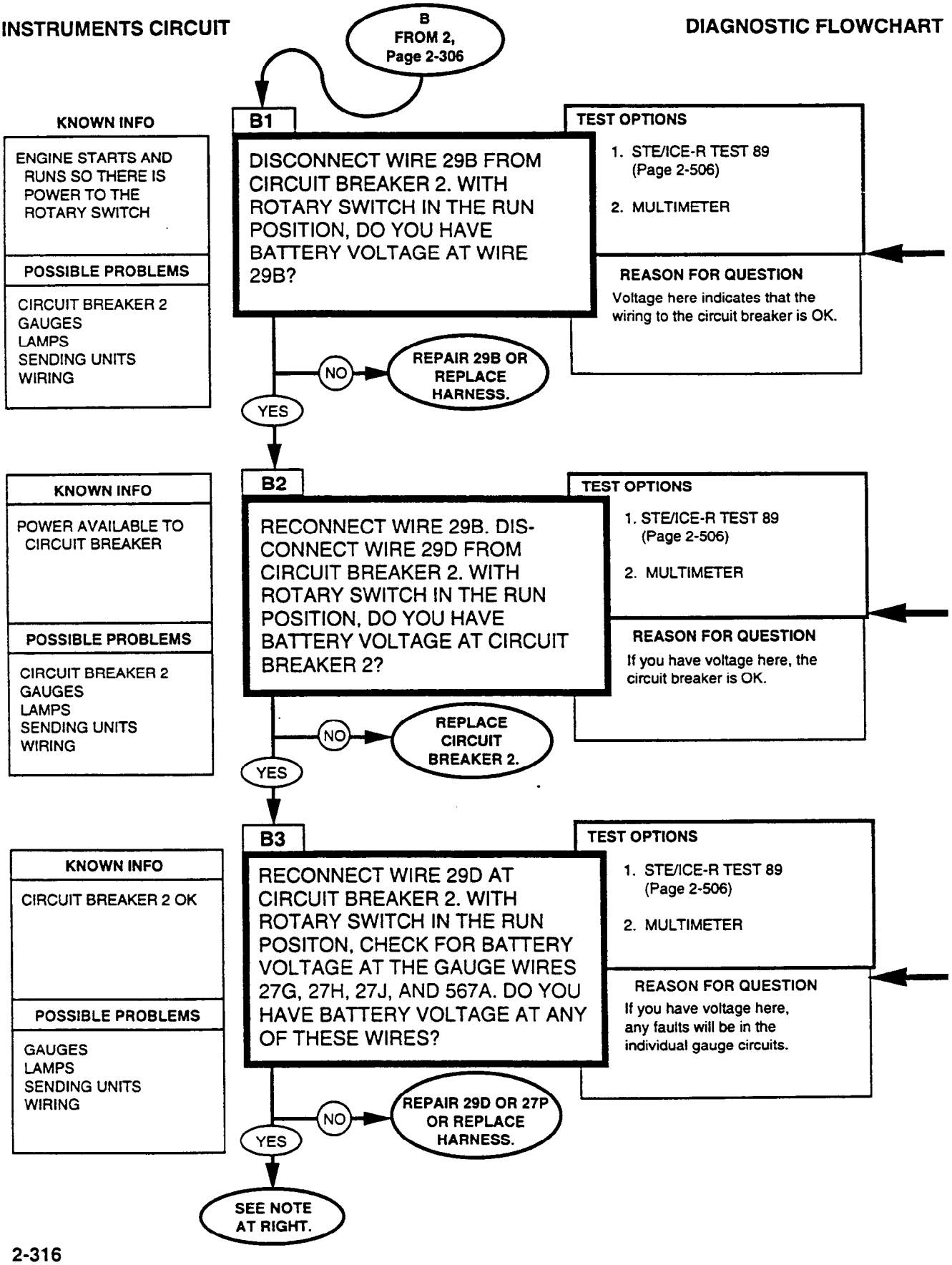

REFERENCE INFORMATION

INSTRUMENTS CIRCUIT

The easiest way to reach the circuit breaker and gauge wiring is to remove the gauge panel screws and pull the panel out far enough to work with the wiring.

Replace harness or repair wiring (para. 4-80).

DC VOLTAGE 0-45 VOLTS
STE/ICE-R TEST 89

1. Connect RED clip to the indicated test point, BLACK clip to negative or ground.
2. Start Test 89, DC Volts.
3. Displayed reading is in volts.

BATTERY VOLTAGE
MULTIMETER

1. Set the voltmeter to a DC volts scale of at least 40 volts.
2. Connect the RED lead to positive and the BLACK lead to negative.
3. Be sure to read the correct scale.

Replace circuit breaker (para. 4-12).

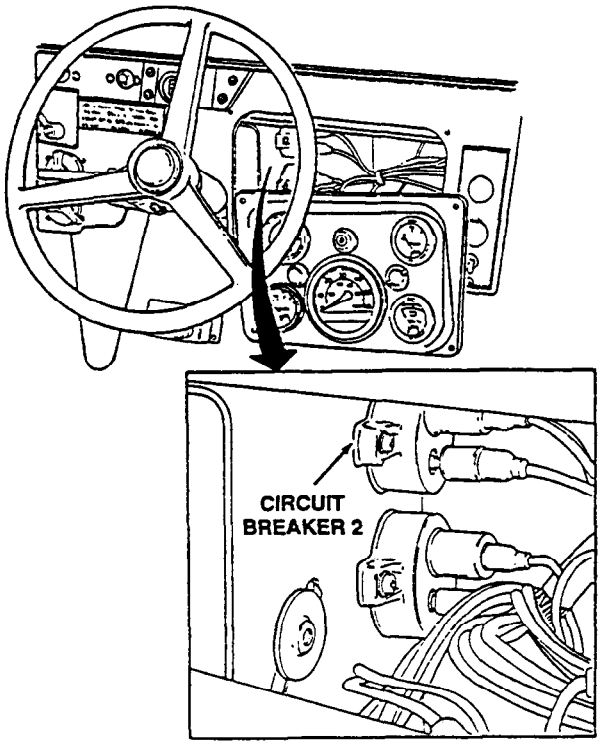

Replace harness or repair wiring (para. 4-80).

You have checked all the common power wiring to all the gauges and warning lamps. Reconnect wires and return to step 3, page 2-306, and continue testing.

INSTRUMENTS CIRCUIT

DIAGNOSTIC FLOWCHART

C
FROM 3,
Page 2-306

C1

KNOWN INFO

POWER AVAILABLE TO GAUGES
WAIT-TO-START LAMP DOESN'T COME ON

POSSIBLE PROBLEMS

WAIT-TO-START LAMP
PCB
GLOW PLUG CONTROLLER
WIRING

DISCONNECT WIRE 27F AT THE WAIT-TO-START LAMP. WITH THE ROTARY SWITCH IN THE RUN POSITION, DO YOU HAVE BATTERY VOLTAGE AT WIRE 27F?

TEST OPTIONS

1. STE/ICE-R TEST 89 (Page 2-506)
2. MULTIMETER

REASON FOR QUESTION

You know power is available at the wire junction. Now you need to know if it is reaching the gauge.

NO → REPAIR 27F OR REPLACE HARNESS.

YES

!!

C2

KNOWN INFO

POWER AVAILABLE TO LAMP

POSSIBLE PROBLEMS

WAIT-TO-START LAMP
PCB
GLOW PLUG CONTROLLER
WIRING

DISCONNECT PCB ENGINE CONNECTOR, BODY CONNECTOR & WIRE 571A AT THE WAIT-TO-START LAMP. DO YOU HAVE CONTINUITY BETWEEN WIRE 571A & SOCKET E ON THE BODY CONNECTOR HARNESS?

TEST OPTIONS

1. STE/ICE-R TEST 91 (Page 2-508)
2. MULTIMETER

REASON FOR QUESTION

The ground circuit for the lamp goes through this wire and the PCB.

NO → REPAIR 571A OR REPLACE HARNESS.

YES

C3

KNOWN INFO

LAMP HAS GROUND

POSSIBLE PROBLEMS

WAIT-TO-START LAMP
PCB
GLOW PLUG CONTROLLER
WIRING

CONNECT RED LEAD OF STE/ICE-R OR MULTIMETER TO LEAD WIRE 27 OF THE WAIT-TO-START LAMP AND CONNECT THE BLACK LEAD TO WIRE 571 LEAD OF THE LAMP. DOES THE LAMP GLOW DIMLY?

TEST OPTIONS

1. STE/ICE-R TEST 91 (Page 2-508)
2. MULTIMETER (RESISTANCE)

REASON FOR QUESTION

You need to make sure the lamp can light.

NO → REPLACE WAIT-TO -START LAMP.

YES

GO TO C4,
Page 2-320

REFERENCE INFORMATION

BATTERY VOLTAGE MULTIMETER

1. Set the voltmeter to a DC volts scale of at least 40 volts.
2. Connect the RED lead to positive and the BLACK lead to negative.
3. Be sure to read the correct scale.

RESISTANCE AND CONTINUITY 0-4,500 OHMS STE/ICE-R TEST 91

1. Connect RED clip and BLACK clip to the terminations indicated in the question. RED to the first, BLACK to the second.
2. Start Test 91, 0-4,500 Ohms.
3. Displayed reading is in ohms. Less than 5 ohms is continuity. If the resistance is over 4,500 ohms, STE/ICE-R displays .9.9.9.9.

WARNING

Disconnect negative battery cable before disconnecting and reconnecting PCB harness.

WARNING

There is battery voltage at the PCB at all times. Failure to disconnect battery cable will result in damage to equipment or injury to personnel.

Repair harness (para. 4-80).

It is important to connect the leads as indicated because you are checking continuity across a diode. The lamp will glow dimly because you are supplying a small amount of power through STE/ICE-R. You may have to shade the lamp with your hand to see if it glows.

A multimeter may not supply enough power to light the lamp. In this case, look for a much greater resistance when measuring with the leads connected in one direction than when they are connected in reverse.

Replace lamp (para. 4-20).

INSTRUMENTS CIRCUIT

DC VOLTAGE 0-45 VOLTS STE/ICE-R TEST 89

1. Connect RED clip to the indicated test point, BLACK clip to negative or ground.
2. Start Test 89, DC Volts.
3. Displayed reading is in volts.

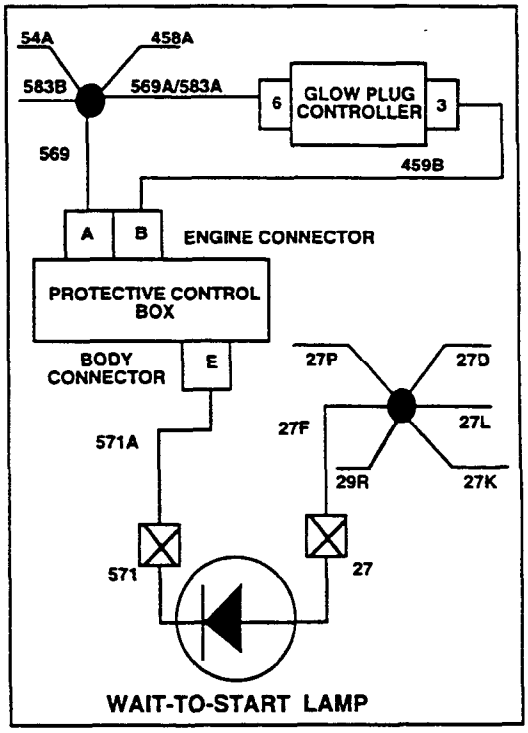

WAIT-TO-START LAMP

CONTINUITY (RESISTANCE) MULTIMETER

1. Set the voltmeter to an ohms scale of about 1,000 ohms.
2. Connect the RED and BLACK leads to the connections stated in the question.
3. Be sure to read the correct scale. Less than 5 ohms indicates continuity. For an open circuit, the meter should peg full scale (needle all the way to the left).

INSTRUMENTS CIRCUIT

DIAGNOSTIC FLOWCHART

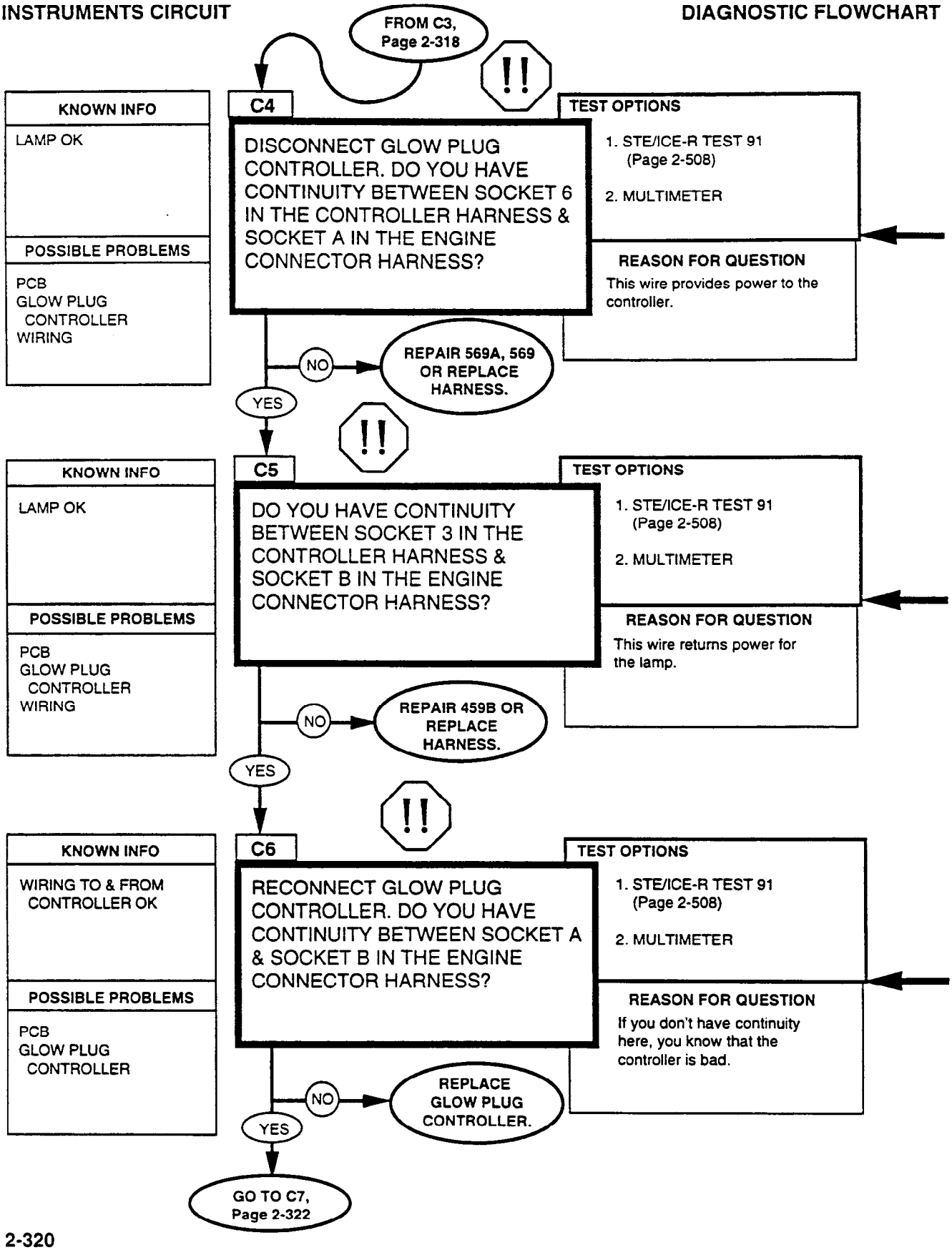

REFERENCE INFORMATION

WARNING

Disconnect negative battery cable before disconnecting and reconnecting PCB harness.

WARNING

There is battery voltage at the PCB at all times. Failure to disconnect battery cable will result in damage to equipment or injury to personnel.

RESISTANCE AND CONTINUITY
0-4,500 OHMS
STE/ICE-R TEST 91

1. Connect RED clip and BLACK clip to the terminations indicated in the question. RED to the first, BLACK to the second.
2. Start Test 91, 0-4,500 Ohms.
3. Displayed reading is in ohms. Less than 5 ohms is continuity. If the resistance is over 4,500 ohms, STE/ICE-R displays .9.9.9.9.

CONTINUITY (RESISTANCE)
MULTIMETER

1. Set the voltmeter to an ohms scale of about 1,000 ohms.
2. Connect the RED and BLACK leads to the connections stated in the question.
3. Be sure to read the correct scale. Less than 5 ohms indicates continuity. For an open circuit, the meter should peg full scale (needle all the way to the left).

Repair/replace harness (para. 4-80).

Engine temperature must be below 120°F (49°C) in order to make this test. Otherwise, normal operation of the glow plug controller will cause the circuit to be open.

Replace glow plug controller (para. 4-33).

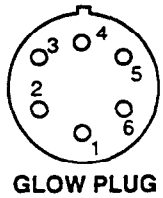

GLOW PLUG CONTROLLER HARNESS

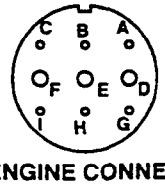

PCB ENGINE CONNECTOR

INSTRUMENTS CIRCUIT

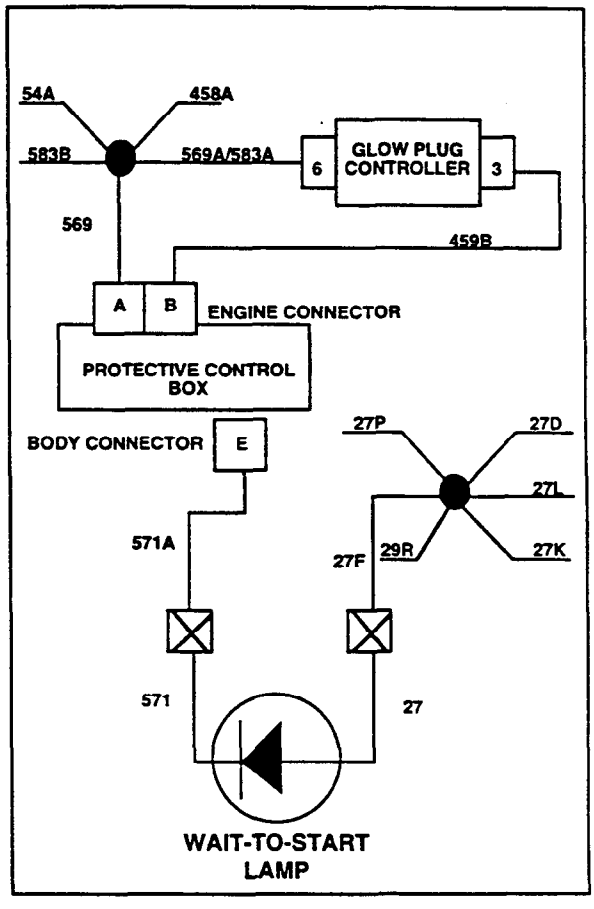

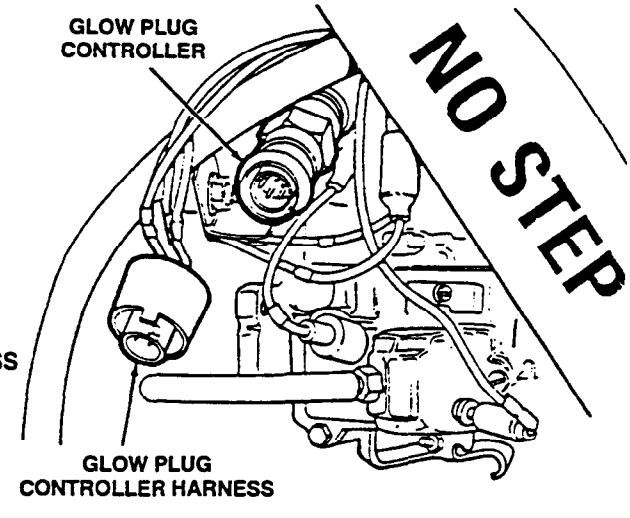

INSTRUMENTS CIRCUIT **DIAGNOSTIC FLOWCHART**

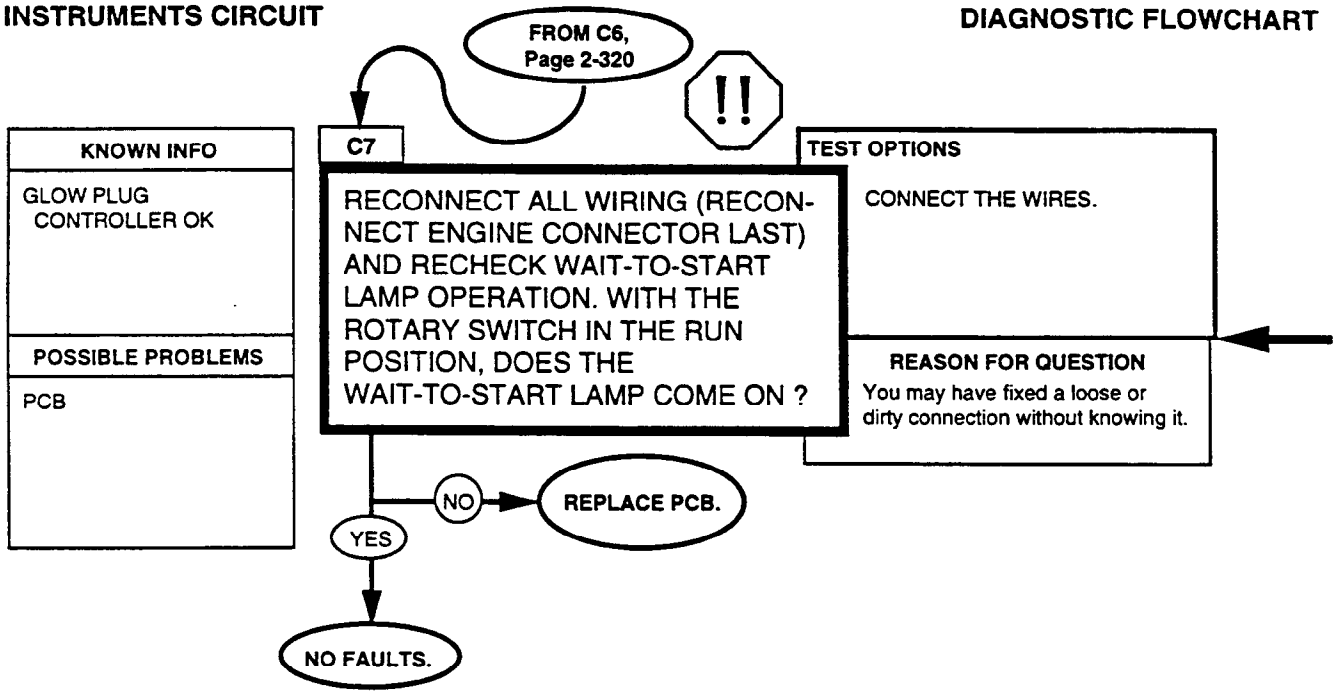

REFERENCE INFORMATION

INSTRUMENTS CIRCUIT

WARNING

Disconnect negative battery cable before disconnecting and reconnecting PCB harness.

WARNING

There is battery voltage at the PCB at all times. Failure to disconnect battery cable will result in damage to equipment or injury to personnel.

Engine temperature must be below 120°F (49°C) or the lamp may not come on.

Replace PCB (para. 4-4).

INSTRUMENTS CIRCUIT — **DIAGNOSTIC FLOWCHART**

D
FROM 4,
Page 2-308

D1

KNOWN INFO
BRAKE LAMP DOESN'T COME ON POWER AVAILABLE TO THE GAUGES
POSSIBLE PROBLEMS
PARKING BRAKE SWITCH BRAKE LAMP WIRING

DISCONNECT WIRE 27L AT THE BRAKE WARNING LAMP.

WITH THE ROTARY SWITCH IN THE RUN POSITION, DO YOU HAVE BATTERY VOLTAGE AT WIRE 27L?

TEST OPTIONS

1. STE/ICE-R TEST 89 (Page 2-506)
2. MULTIMETER

REASON FOR QUESTION

This wire provides power for the lamp.

NO → REPAIR 27L OR REPLACE HARNESS.

YES ↓

D2

KNOWN INFO
POWER AVAILABLE TO THE LAMP
POSSIBLE PROBLEMS
PARKING BRAKE SWITCH BRAKE LAMP WIRING

DISCONNECT WIRE 67D AT BRAKE LAMP. CONNECT RED LEAD OF STE/ICE-R OR MULTIMETER TO WIRE 67. CONNECT THE BLACK LEAD TO WIRE 27.

DOES THE LAMP GLOW DIMLY?

TEST OPTIONS

1. STE/ICE-R TEST 91 (Page 2-508)
2. MULTIMETER

REASON FOR QUESTION

You need to know that the lamp will light.

NO → REPLACE BRAKE WARNING LAMP.

YES ↓

D3

KNOWN INFO
BRAKE LAMP OK
POSSIBLE PROBLEMS
PARKING BRAKE SWITCH WIRING

DISCONNECT WIRE 67C AT PARKING BRAKE SWITCH.

DO YOU HAVE CONTINUITY BETWEEN WIRE 67C AT THE SWITCH & WIRE 67D AT THE LAMP?

TEST OPTIONS

1. STE/ICE-R TEST 91 (Page 2-508)
2. MULTIMETER

REASON FOR QUESTION

If either of these wires are open, the lamp circuit will not be grounded.

NO → REPAIR 67C,D, OR REPLACE HARNESS.

YES ↓

GO TO D4,
Page 2-326

REFERENCE INFORMATION

INSTRUMENTS CIRCUIT

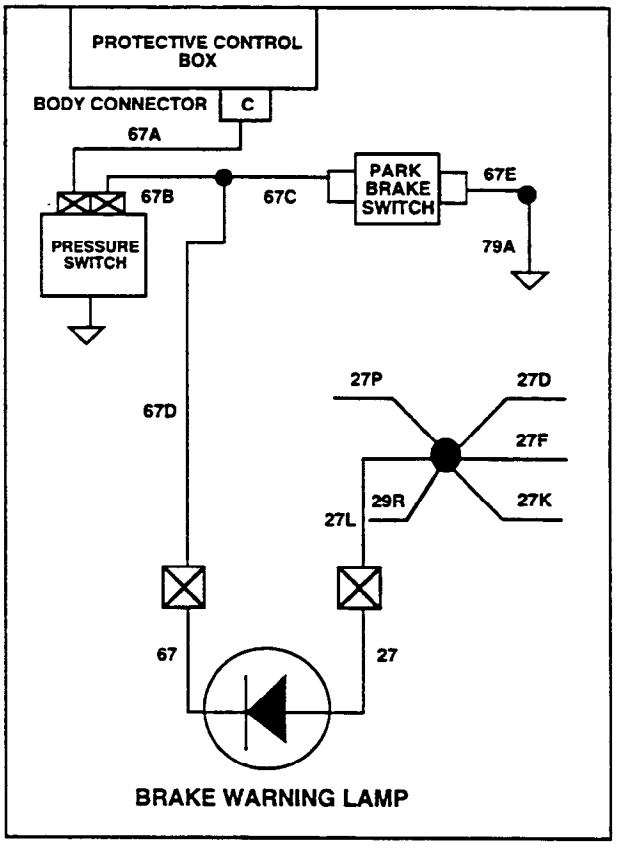

Repair/replace wiring (para. 4-80).

Replace brake warning lamp (para. 4-21).

It is important to connect the leads as indicated because you are checking continuity across a diode. The lamp will glow dimly because you are supplying a small amount of power through STE/ICE-R. You may have to shade the lamp with your hand to see if it glows.

A multimeter may not supply enough power to light the lamp. In this case, look for a much greater resistance when measuring with the leads connected in one direction than when they are connected in reverse.

Replace harness or repair wiring (para. 4-80).

DC VOLTAGE 0-45 VOLTS STE/ICE-R TEST 89

1. Connect RED clip to the indicated test point, BLACK clip to negative or ground.
2. Start Test 89, DC Volts.
3. Displayed reading is in volts.

BATTERY VOLTAGE MULTIMETER

1. Set the voltmeter to a DC volts scale of at least 40 volts.
2. Connect the RED lead to positive and the BLACK lead to negative.
3. Be sure to read the correct scale.

RESISTANCE AND CONTINUITY 0-4,500 OHMS STE/ICE-R TEST 91

1. Connect RED clip and BLACK clip to the indicated terminals in the question. RED to the first, BLACK to the second.
2. Start Test 91, 0-4,500 Ohms.
3. Displayed reading is in ohms. Less than 5 ohms is continuity. If the resistance is over 4,500 ohms, STE/ICE-R displays .9.9.9.9.

CONTINUITY (RESISTANCE) MULTIMETER

1. Set the voltmeter to an ohms scale of about 1,000 ohms.
2. Connect the RED and BLACK leads to the connections stated in the question.
3. Be sure to read the correct scale. Less than 5 ohms indicates continuity. For an open circuit, the meter should peg full scale (needle all the way to the left).

INSTRUMENTS CIRCUIT

DIAGNOSTIC FLOWCHART

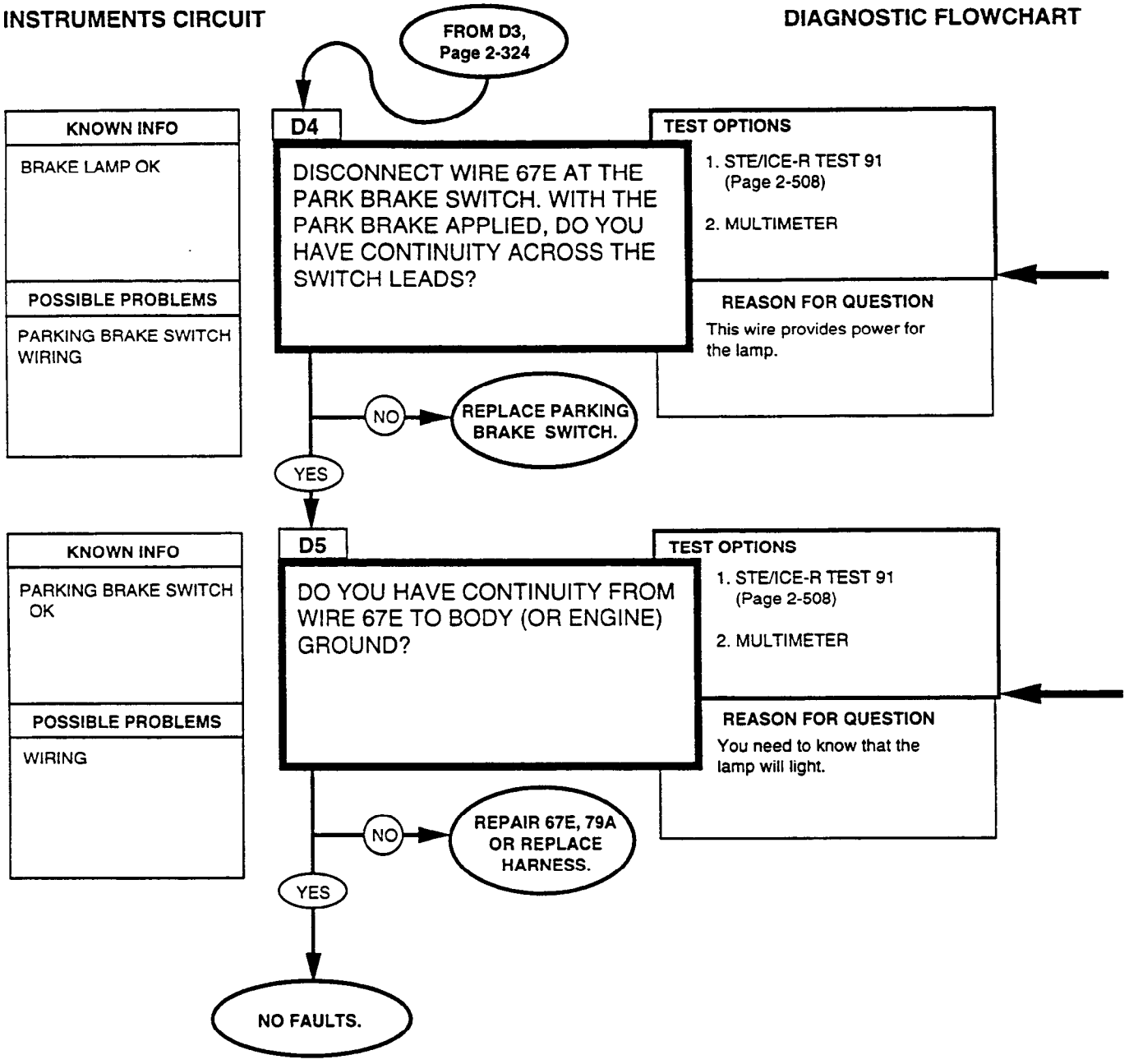

REFERENCE INFORMATION

INSTRUMENTS CIRCUIT

RESISTANCE AND CONTINUITY
0-4,500 OHMS
STE/ICE-R TEST 91

1. Connect RED clip and BLACK clip to the terminations indicated in the question. RED to the first, BLACK to the second.
2. Start Test 91, 0-4,500 Ohms.
3. Displayed reading is in ohms. Less than 5 ohms is continuity. If the resistance is over 4,500 ohms, STE/ICE-R displays .9.9.9.9.

Replace parking brake switch (para. 4-23).

CONTINUITY (RESISTANCE)
MULTIMETER

1. Set the voltmeter to an ohms scale of about 1,000 ohms.
2. Connect the RED and BLACK leads to the connections stated in the question.
3. Be sure to read the correct scale. Less than 5 ohms indicates continuity. For an open circuit, the meter should peg full scale (needle all the way to the left).

Replace harness or repair wiring (para. 4-80).

Reconnect all wiring. Connect glow plug controller last.

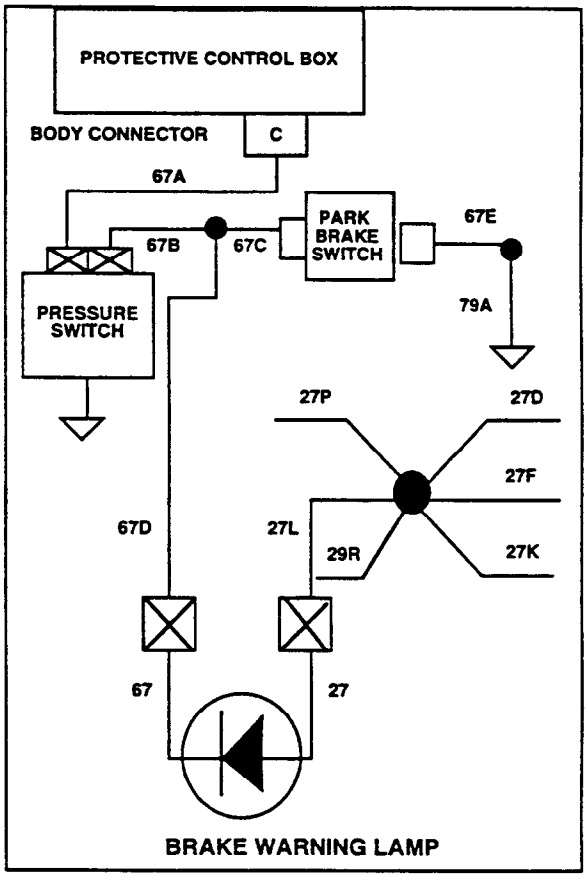

INSTRUMENTS CIRCUIT

DIAGNOSTIC FLOWCHART

START

1

KNOWN INFO

BRAKE WARNING LIGHT WON'T GO OFF

POSSIBLE PROBLEMS

PROPORTIONING VALVE
WIRING
PARKING BRAKE SWITCH BOX
BRAKE WARNING PRESSURE SWITCH

BLEED BRAKE SYSTEM. DOES THE LIGHT STAY ON?

TEST OPTIONS

NONE

REASON FOR QUESTION

If the lamp stays on, it could be that the hydraulic brake system has a fault and might require bleeding.

NO → END OF TEST.

YES

2

KNOWN INFO

BRAKE WARNING LIGHT WON'T GO OFF

POSSIBLE PROBLEMS

PROPORTIONING VALVE
WIRING
PARKING BRAKE SWITCH BOX
BRAKE WARNING PRESSURE SWITCH

CHECK PROPORTIONING VALVE FOR PROPER OPERATION. (GO TO B-7 PAGE 2-428). IS PROPORTIONING VALVE OPERATING PROPERLY?

TEST OPTIONS

NONE

REASON FOR QUESTION

If the lamp stays on after bleeding the brake system, the proportioning valve could be malfunctioning.

NO → REPLACE PROPORTIONING VALVE

YES

3

KNOWN INFO

BRAKE WARNING LIGHT WON'T GO OFF

POSSIBLE PROBLEMS

WIRING
PARKING BRAKE SWITCH BOX
BRAKE WARNING PRESSURE SWITCH

DISCONNECT WIRE 67A AND 67B FROM BRAKE WARNING PRESSURE SWITCH, AND WIRE 67C FROM PARKING BRAKE SWITCH. DISCONNECT THE PCB BODY HARNESS CONNECTOR. CONNECT A JUMPER WIRE BETWEEN WIRES 67A AND 67B. DOES THE LIGHT GO OUT?

TEST OPTIONS

VISUAL

REASON FOR QUESTION

If the lamp stays on with the PCB, valve switch, and park brake switch disconnected, the problem is in the wiring.

NO → REPAIR OR REPLACE WIRING HARNESS.

YES

GO TO 4
Page 2-330

REFERENCE INFORMATION

Bleed brake system (para. 7-2).

Replace proportioning valve (para. 7-10).

Replace harness or repair wiring (para. 4-80).

INSTRUMENTS CIRCUIT

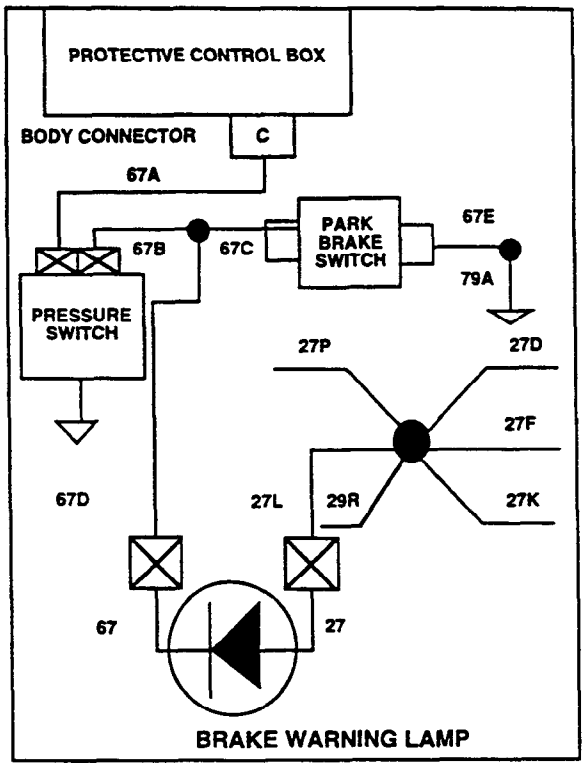

INSTRUMENTS CIRCUIT

DIAGNOSTIC FLOWCHART

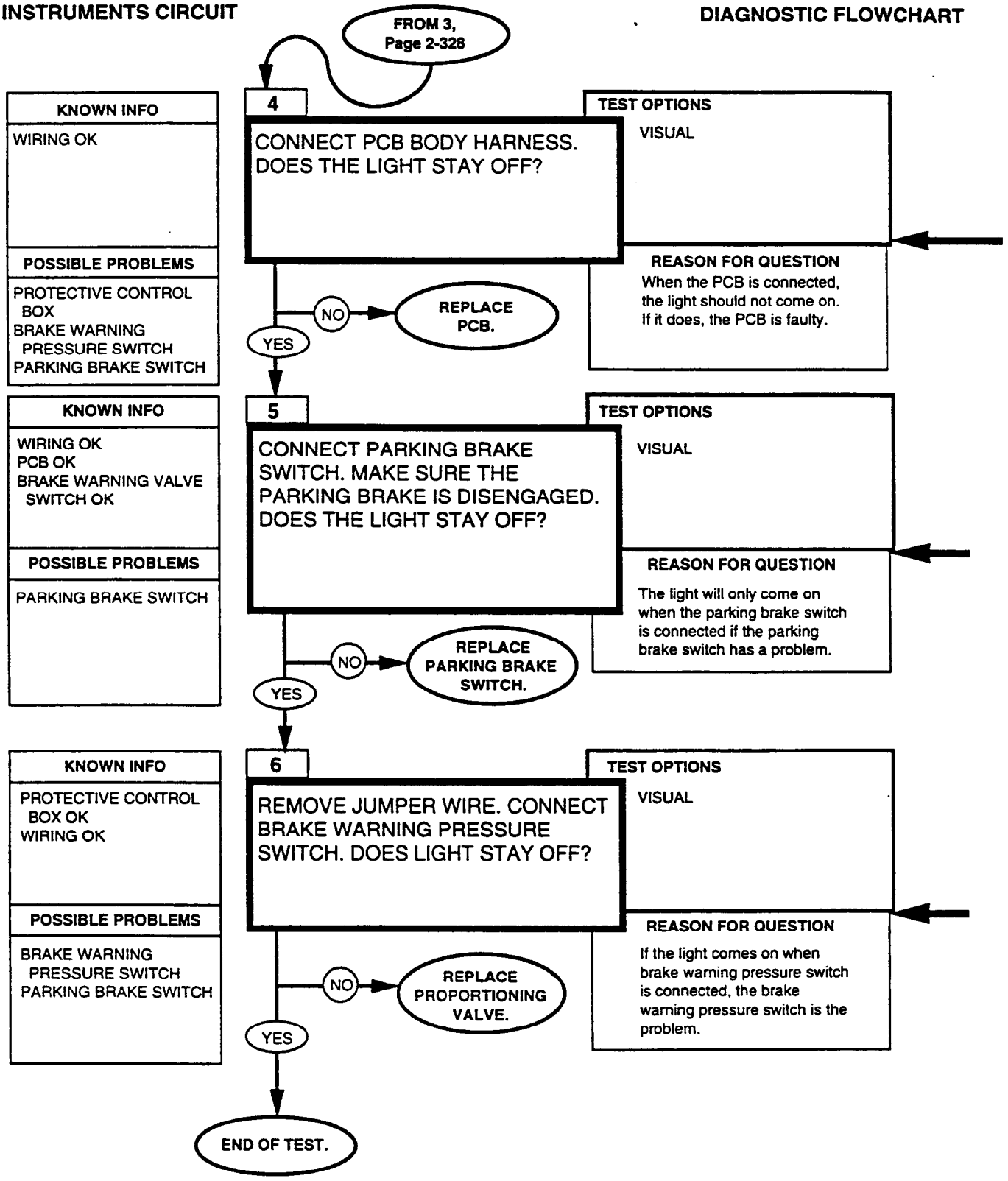

Replace PCB (para. 4-4).

Replace parking brake switch (para. 4-23).

When the brake warning pressure switch is defective, the proportioning valve must be replaced (para. 7-10).

INSTRUMENTS CIRCUIT

DIAGNOSTIC FLOWCHART

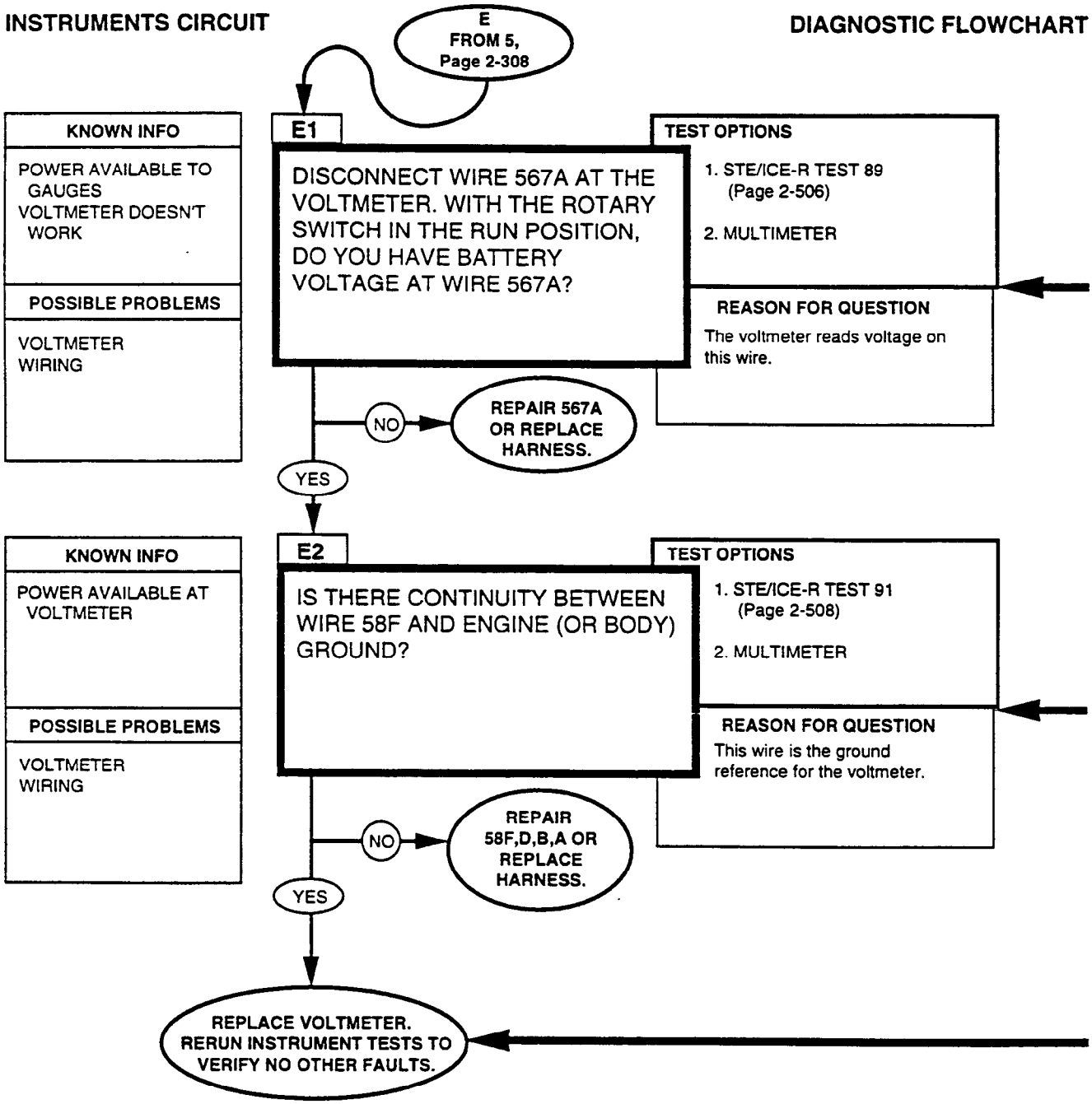

REFERENCE INFORMATION

INSTRUMENTS CIRCUIT

Replace harness or repair wiring (para. 4-80).

DC VOLTAGE 0-45 VOLTS
STE/ICE-R TEST 89

1. Connect RED clip to the indicated test point, BLACK clip to negative or ground.
2. Start Test 89, DC Volts.
3. Displayed reading is in volts.

BATTERY VOLTAGE
MULTIMETER

1. Set the voltmeter to a DC volts scale of at least 40 volts.
2. Connect the RED lead to positive and the BLACK lead to negative.
3. Be sure to read the correct scale.

Replace harness or repair wiring (para. 4-80).

RESISTANCE AND CONTINUITY
0-4,500 OHMS
STE/ICE-R TEST 91

1. Connect RED clip and BLACK clip to the indicated terminals in the question. RED to the first, BLACK to the second.
2. Start Test 91, 0-4,500 Ohms.
3. Displayed reading is in ohms. Less than 5 ohms is continuity. If the resistance is over 4,500 ohms, STE/ICE-R displays .9.9.9.9.

Be sure the charging system is functioning properly before replacing the voltmeter. Run the alternator tests, page 2-199, if you're not sure.

Replace voltmeter (para. 4-16).

CONTINUITY (RESISTANCE)
MULTIMETER

1. Set the voltmeter to an ohms scale of about 1,000 ohms.
2. Connect the RED and BLACK leads to the connections stated in the question.
3. Be sure to read the correct scale. Less than 5 ohms indicates continuity. For an open circuit, the meter should peg full scale (needle all the way to the left).

INSTRUMENTS CIRCUITS

DIAGNOSTIC FLOWCHART

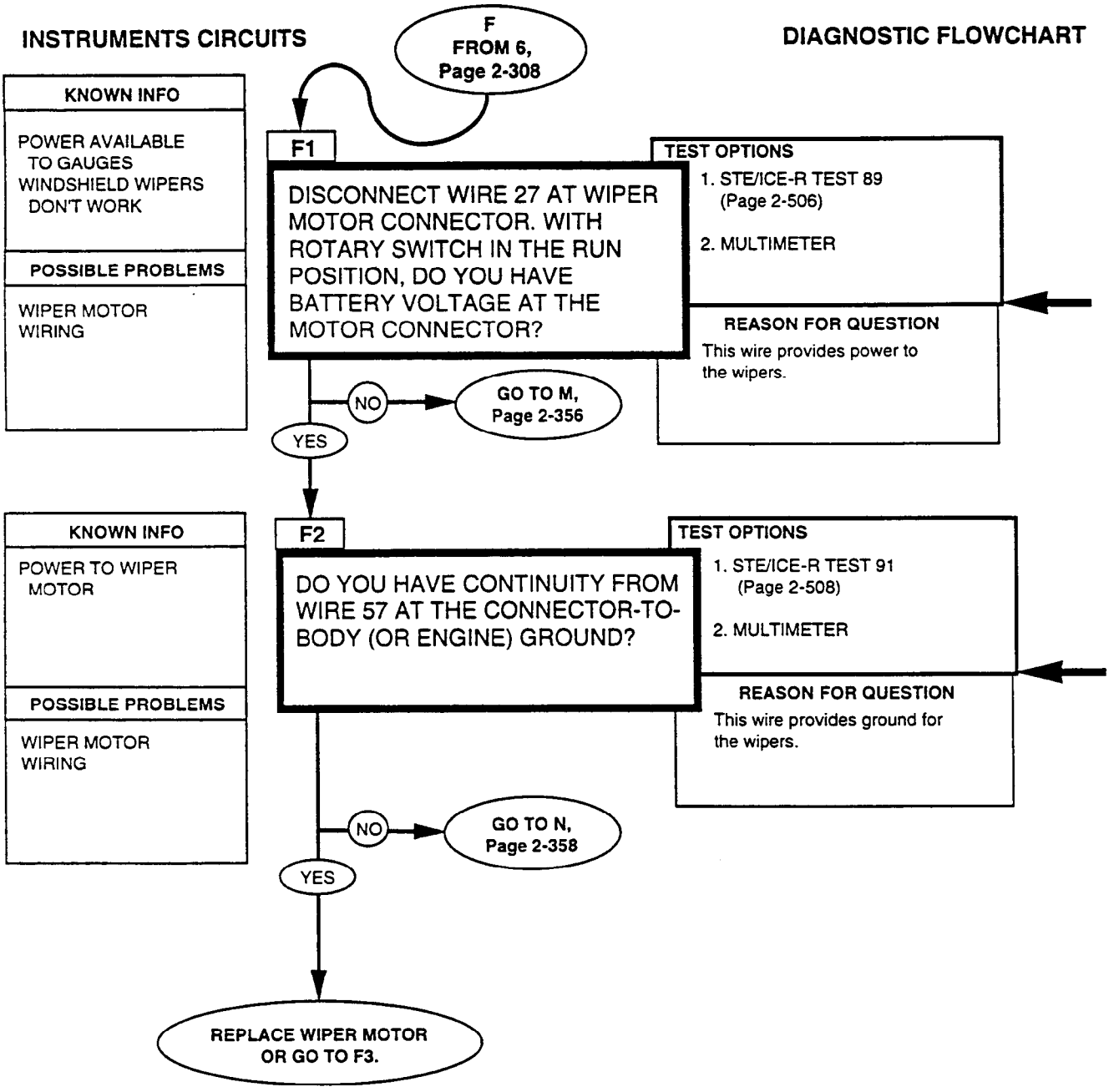

REFERENCE INFORMATION

INSTRUMENTS CIRCUIT

DC VOLTAGE 0-45 VOLTS
STE/ICE-R TEST 89

1. Connect RED clip to the indicated test point BLACK clip to negative or ground.
2. Start Test 89, DC Volts.
3. Displayed reading is in volts.

BATTERY VOLTAGE
MULTIMETER

1. Set the voltmeter to a DC volts scale of at least 40 volts.
2. Connect the RED lead to positive and the BLACK lead to negative.
3. Be sure to read the correct scale.

Replace wiper motor (para. 10-63).

RESISTANCE AND CONTINUITY
0-4,500 OHMS
STE/ICE-R TEST 91

1. Connect RED clip and BLACK clip to the indicated terminals in the question. RED to the first, BLACK to the second.
2. Start Test 91, 0-4,500 Ohms.
3. Displayed reading is in ohms. Less than 5 ohms is continuity. If the resistance is over 4,500 ohms, STE/ICE-R displays .9.9.9.9.

CONTNUITY (RESISTANCE)
MULTIMETER

1. Set the voltmeter to an ohms scale of about 1,000 ohms.
2. Connect the RED and BLACK leads to the connections stated in the question.
3. Be sure to read the correct scale. Less than 5 ohms indicates continuity. For an open circuit, the meter should peg full scale (needle all the way to the left).

INSTRUMENTS CIRCUIT

DIAGNOSTIC FLOWCHART

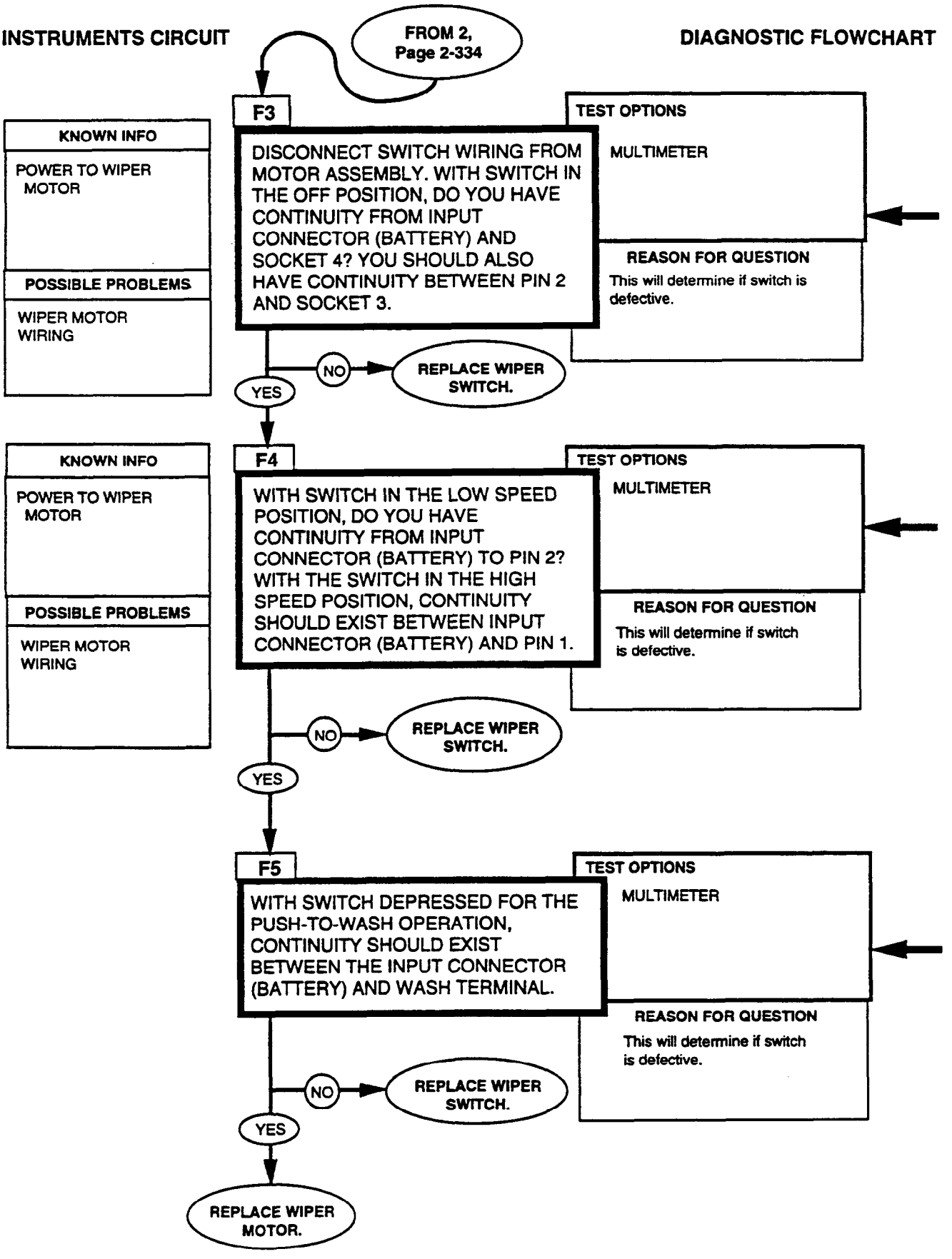

REFERENCE INFORMATION

INSTRUMENTS CIRCUIT

Replace wiper switch (para. 10-63).

CONTINUITY (RESISTANCE) MULTIMETER
1. Set the voltmeter to an ohms scale of about 1,000 ohms. 2. Connect the RED and BLACK leads to the connections stated in the question. 3. Be sure to read the correct scale. Less than 5 ohms indicates continuity. For an open circuit, the meter should peg full scale (needle all the way to the left).

Replace wiper switch (para. 10-63).

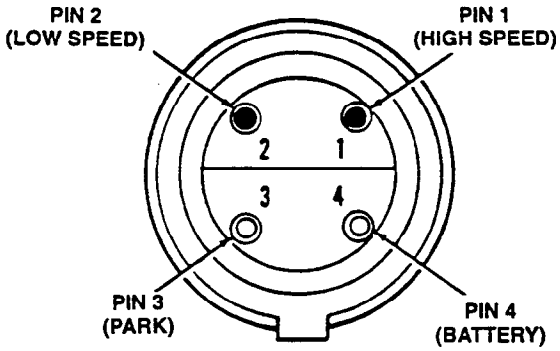

MOTOR CONNECTOR

Replace wiper switch (para. 10-63).

Replace wiper motor (para. 10-63).

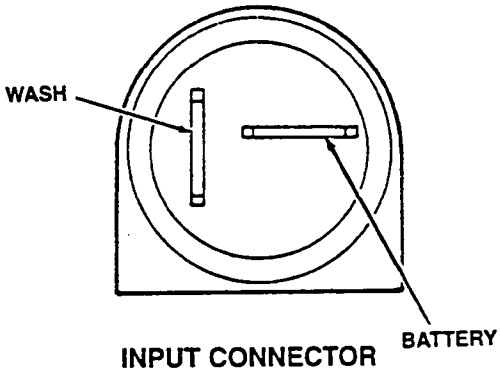

INPUT CONNECTOR

INSTRUMENTS CIRCUIT

DIAGNOSTIC FLOWCHART

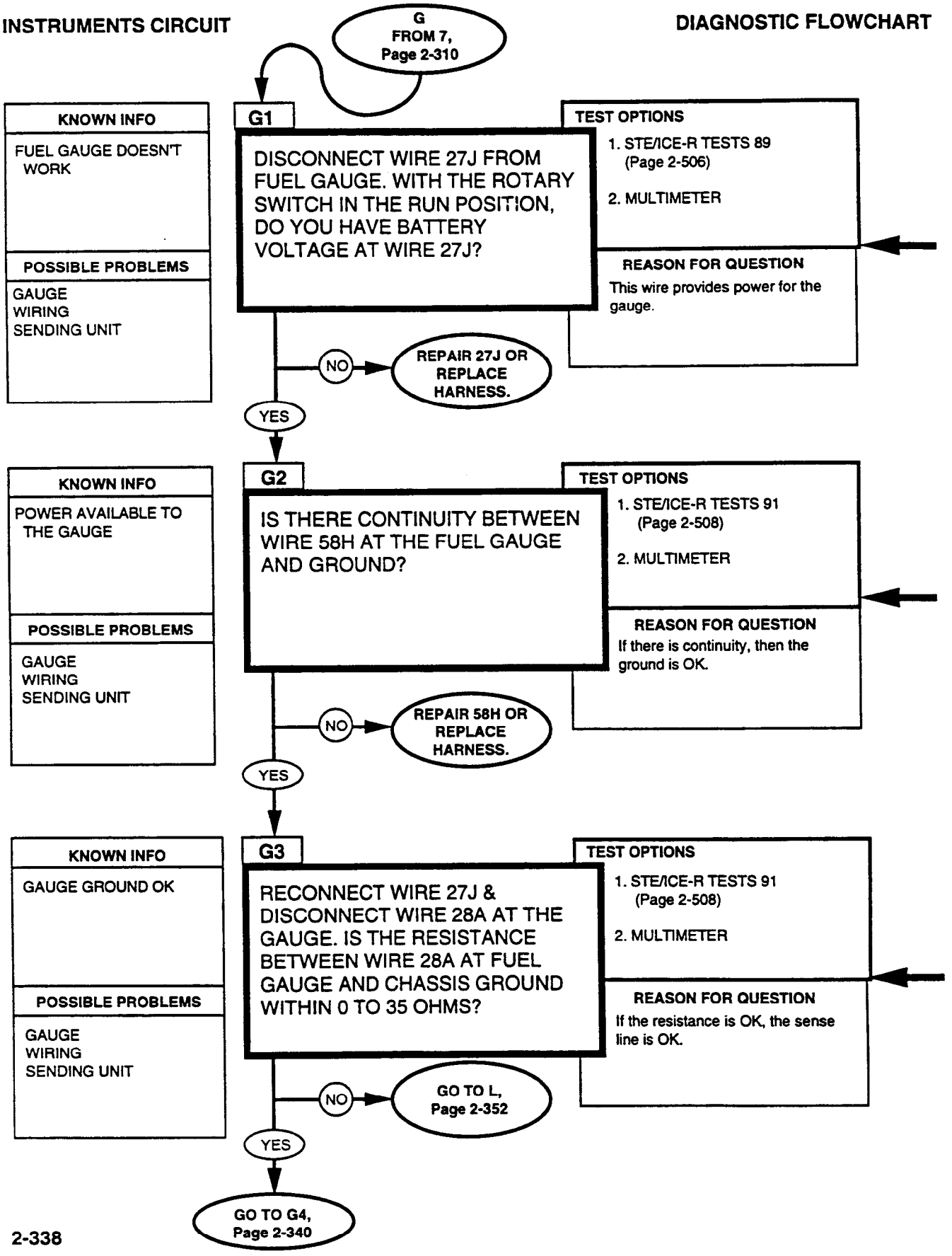

REFERENCE INFORMATION

INSTRUMENTS CIRCUIT

Replace harness or repair wiring (para. 4-80).

DC VOLTAGE 0-45 VOLTS
STE/ICE-R TEST 89

1. Connect RED clip to the indicated test point, BLACK clip to negative or ground.
2. Start Test 89, DC Volts.
3. Displayed reading is in volts.

BATTERY VOLTAGE
MULTIMETER

1. Set the voltmeter to a DC volts scale of at least 40 volts.
2. Connect the RED lead to positive and the BLACK lead to negative.
3. Be sure to read the correct scale.

Replace harness or repair wiring (para. 4-80).

RESISTANCE AND CONTINUITY
0-4,500 OHMS
STE/ICE-R TEST 91

1. Connect RED clip and BLACK clip to the indicated terminals in the question. RED to the first, BLACK to the second.
2. Start Test 91, 0-4,500 Ohms.
3. Displayed reading is in ohms. Less than 5 ohms is continuity. If the resistance is over 4,500 ohms, STE/ICE-R displays .9.9.9.9.

CONTINUITY (RESISTANCE)
MULTIMETER

1. Set the voltmeter to an ohms scale of about 1,000 ohms.
2. Connect the RED and BLACK leads to the connections stated in the question.
3. Be sure to read the correct scale. Less than 5 ohms indicates continuity. For an open circuit, the meter should peg full scale (needle all the way to the left).

INSTRUMENTS CIRCUIT **DIAGNOSTIC FLOWCHART**

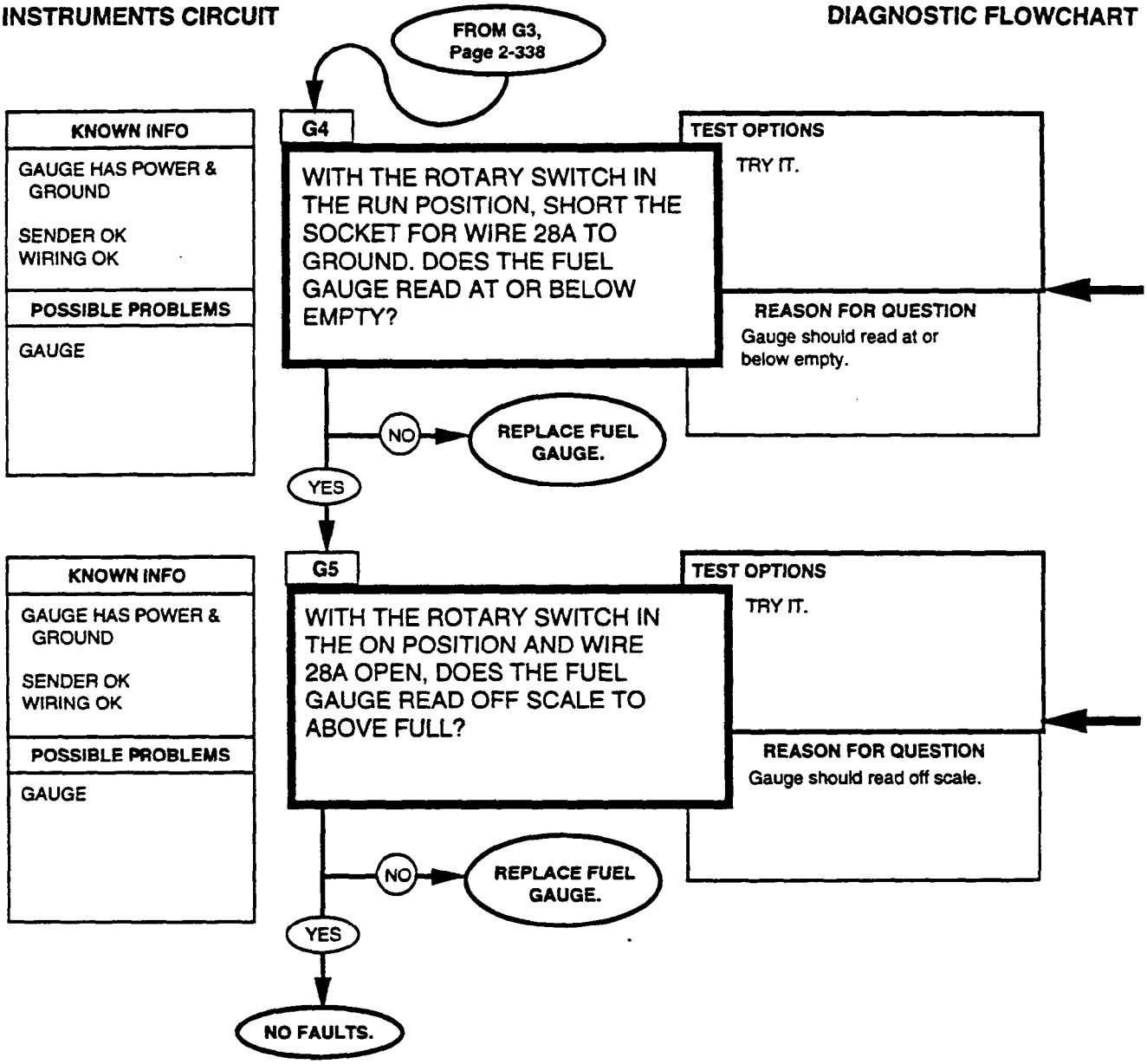

Replace fuel gauge (para. 4-16).

Replace fuel gauge (para. 4-16).

INSTRUMENTS CIRCUIT

DIAGNOSTIC FLOWCHART

H
FROM 8,
Page 2-310

H1

KNOWN INFO

POWER AVAILABLE TO THE GAUGES
OIL PRESSURE GAUGE DOESN'T WORK

POSSIBLE PROBLEMS

GAUGE
SENDING UNIT
WIRING

DISCONNECT WIRE 27H AT THE OIL PRESSURE GAUGE. WITH THE ROTARY SWITCH IN THE RUN POSITION, DO YOU HAVE BATTERY VOLTAGE AT WIRE 27H?

TEST OPTIONS

1. STE/ICE-R TEST 89 (Page 2-506)
2. MULTIMETER

REASON FOR QUESTION

This is the power wire for the gauge.

NO → REPAIR 27H OR REPLACE HARNESS.

YES ↓

H2

KNOWN INFO

OIL PRESSURE GAUGE HAS POWER

POSSIBLE PROBLEMS

GAUGE
SENDING UNIT
WIRING

WITH THE ROTARY SWITCH IN THE OFF POSITION, DO YOU HAVE CONTINUITY BETWEEN WIRE 58G AT THE GAUGE AND ENGINE (OR BODY) GROUND?

TEST OPTIONS

1. STE/ICE-R TEST 91 (PAGE 2-508)
2. MULTIMETER

REASON FOR QUESTION

This is the ground wire for the gauge.

NO → REPAIR 58G OR REPLACE HARNESS.

YES ↓

H3

KNOWN INFO

GAUGE GROUND OK

POSSIBLE PROBLEMS

OIL PRESSURE GAUGE
SENDING UNIT
WIRING

DISCONNECT WIRE 36A AT THE GAUGE AND AT THE OIL PRESSURE SENDING UNIT. DO YOU HAVE CONTINUITY THROUGH WIRE 36A? RECONNECT WIRE 36A AFTER MAKING THE MEASUREMENT.

TEST OPTIONS

1. STE/ICE-R TEST 91 (Page 2-508)
2. MULTIMETER

REASON FOR QUESTION

If this wire is open, the gauge will always read offscale to the left.

NO → REPAIR 36A OR REPLACE HARNESS.

YES ↓

GO TO H4,
Page 2-344

REFERENCE INFORMATION

INSTRUMENTS CIRCUIT

DC VOLTAGE 0-45 VOLTS
STE/ICE-R TEST 89

1. Connect RED clip to the indicated test point, BLACK clip to negative or ground.
2. Start Test 89, DC Volts.
3. Displayed reading is in volts.

Replace harness or repair wiring (para. 4-80).

BATTERY VOLTAGE
MULTIMETER

1. Set the voltmeter to a DC volts scale of at least 40 volts.
2. Connect the RED lead to positive and the BLACK lead to negative.
3. Be sure to read the correct scale.

RESISTANCE AND CONTINUITY
0-4,500 OHMS
STE/ICE-R TEST 91

1. Connect RED clip and BLACK clip to the indicated terminals in the question. RED to the first, BLACK to the second.
2. Start Test 91, 0-4,500 Ohms.
3. Displayed reading is in ohms. Less than 5 ohms is continuity. If the resistance is over 4,500 ohms, STE/ICE-R displays .9.9.9.9.

Replace harness or repair wiring (para. 4-80).

CONTINUITY (RESISTANCE)
MULTIMETER

1. Set the voltmeter to an ohms scale of about 1,000 ohms.
2. Connect the RED and BLACK leads to the connections stated in the question.
3. Be sure to read the correct scale. Less than 5 ohms indicates continuity. For an open circuit, the meter should peg full scale (needle all the way to the left).

Replace harness or repair wiring (para. 4-80).

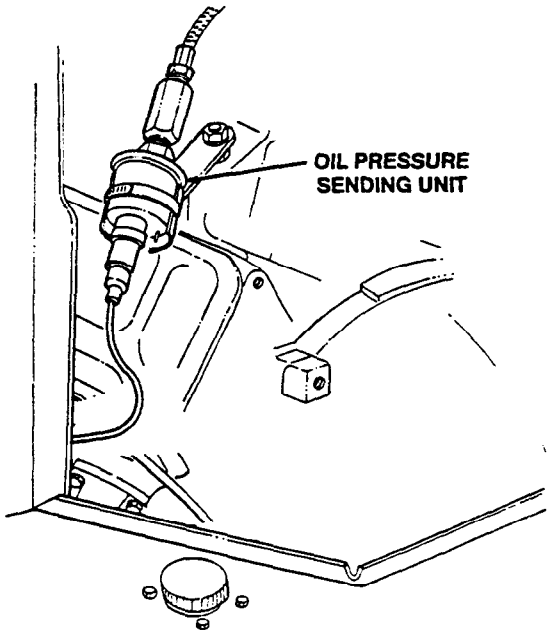

INSTRUMENTS CIRCUIT

DIAGNOSTIC FLOWCHART

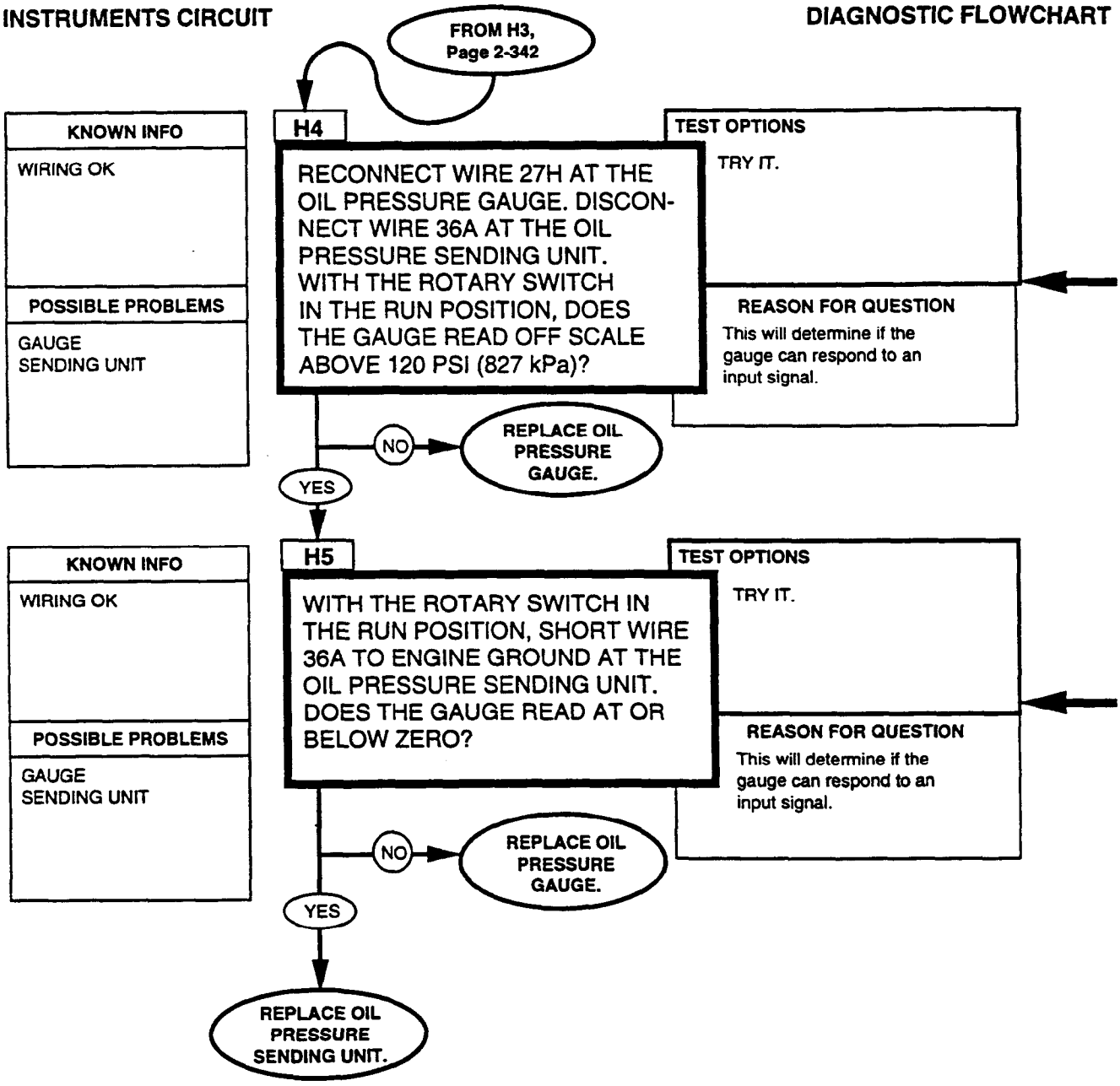

Make sure wire 36A is not connected to the sending unit and is not touching anything metal that could cause the wire to be grounded.

Replace oil pressure gauge (para. 4-16).

Wire 36A must be connected at the gauge. Short the wire at the sending unit to ground.

Replace oil pressure gauge (para. 4-16).

Replace oil pressure sending unit (para. 4-29).

INSTRUMENTS CIRCUIT

DIAGNOSTIC FLOWCHART

I
FROM 9,
Page 2-310

I1

KNOWN INFO

POWER AVAILABLE TO THE GAUGES
TEMPERATURE GAUGE DOESN'T WORK

POSSIBLE PROBLEMS

GAUGE
SENDING UNIT
WIRING

DISCONNECT WIRE 27G AT THE TEMPERATURE GAUGE. WITH THE ROTARY SWITCH IN THE RUN POSITION, DO YOU HAVE BATTERY VOLTAGE AT WIRE 27G?

TEST OPTIONS

1. STE/ICE-R TEST 89 (Page 2-506)
2. MULTIMETER

REASON FOR QUESTION

This is the power wire for the gauge.

NO → REPAIR 27G OR REPLACE HARNESS.

YES ↓

I2

KNOWN INFO

TEMPERATURE GAUGE HAS POWER

POSSIBLE PROBLEMS

GAUGE
SENDING UNIT
WIRING

WITH THE ROTARY SWITCH IN THE OFF POSITION, DO YOU HAVE CONTINUITY BETWEEN WIRE 58E AT THE GAUGE AND ENGINE (OR BODY) GROUND?

TEST OPTIONS

1. STE/ICE-R TEST 91 (Page 2-508)
2. MULTIMETER

REASON FOR QUESTION

This is the ground wire for the gauge.

NO → REPAIR 58E OR REPLACE HARNESS.

YES ↓

I3

KNOWN INFO

GAUGE GROUND OK

POSSIBLE PROBLEMS

TEMPERATURE GAUGE
SENDING UNIT
WIRING

DISCONNECT WIRE 33A AT THE GAUGE AND AT THE WIRE 33B AT THE TEMPERATURE SENDING UNIT. DO YOU HAVE CONTINUITY FROM WIRE 33A TO WIRE 33B?

TEST OPTIONS

1. STE/ICE-R TEST 91 (Page 2-508)
2. MULTIMETER

REASON FOR QUESTION

If either of these wires are open, the gauge will always read off scale to the left.

NO → REPAIR 33A, 33B OR REPLACE HARNESS.

YES ↓

GO TO I4, Page 2-348

REFERENCE INFORMATION

INSTRUMENTS CIRCUIT

Replace harness or repair wiring (para. 4-80).

DC VOLTAGE 0-45 VOLTS
STE/ICE-R TEST 89

1. Connect RED clip to the indicated test point, BLACK clip to negative or ground.
2. Start Test 89, DC Volts.
3. Displayed reading is in volts.

Replace harness or repair wiring (para. 4-80).

CONTINUITY (RESISTANCE)
MULTIMETER

1. Set the voltmeter to an ohms scale of about 1,000 ohms.
2. Connect the RED and BLACK leads to the connections stated in the question.
3. Be sure to read the correct scale. Less than 5 ohms indicates continuity. For an open circuit, the meter should peg full scale (needle all the way to the left).

Replace harness or repair wiring (para. 4-80).

RESISTANCE AND CONTINUITY
0-4,500 OHMS
STE/ICE-R TEST 91

1. Connect RED clip and BLACK clip to the indicated terminals in the question. RED to the first, BLACK to the second.
2. Start Test 91, 0-4,500 Ohms.
3. Displayed reading is in ohms. Less than 5 ohms is continuity. If the resistance is over 4,500 ohms, STE/ICE-R displays .9.9.9.9.

Replace harness or repair wiring (para. 4-80).

BATTERY VOLTAGE
MULTIMETER

1. Set the voltmeter to a DC volts scale of at least 40 volts.
2. Connect the RED lead to positive and the BLACK lead to negative.
3. Be sure to read the correct scale.

INSTRUMENTS CIRCUIT **DIAGNOSTIC FLOWCHART**

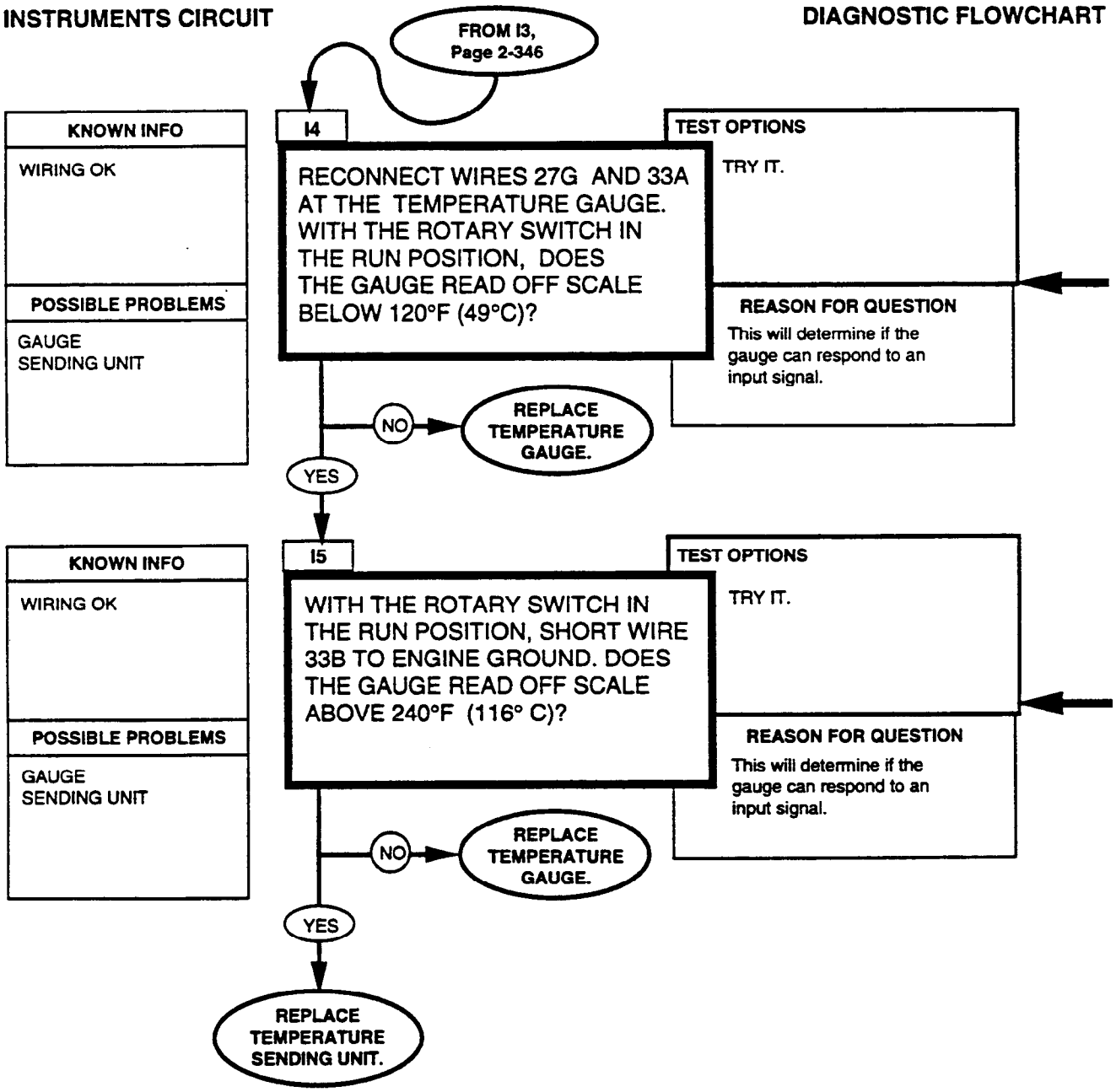

Make sure wire 33B is not connected to the sending unit and is not touching anything metal that could cause the wire to be grounded.

Replace temperature gauge (para. 4-16).

Replace temperature gauge (para. 4-16).

Replace temperature sending unit (para. 4-28).

INSTRUMENTS CIRCUIT **DIAGNOSTIC FLOWCHART**

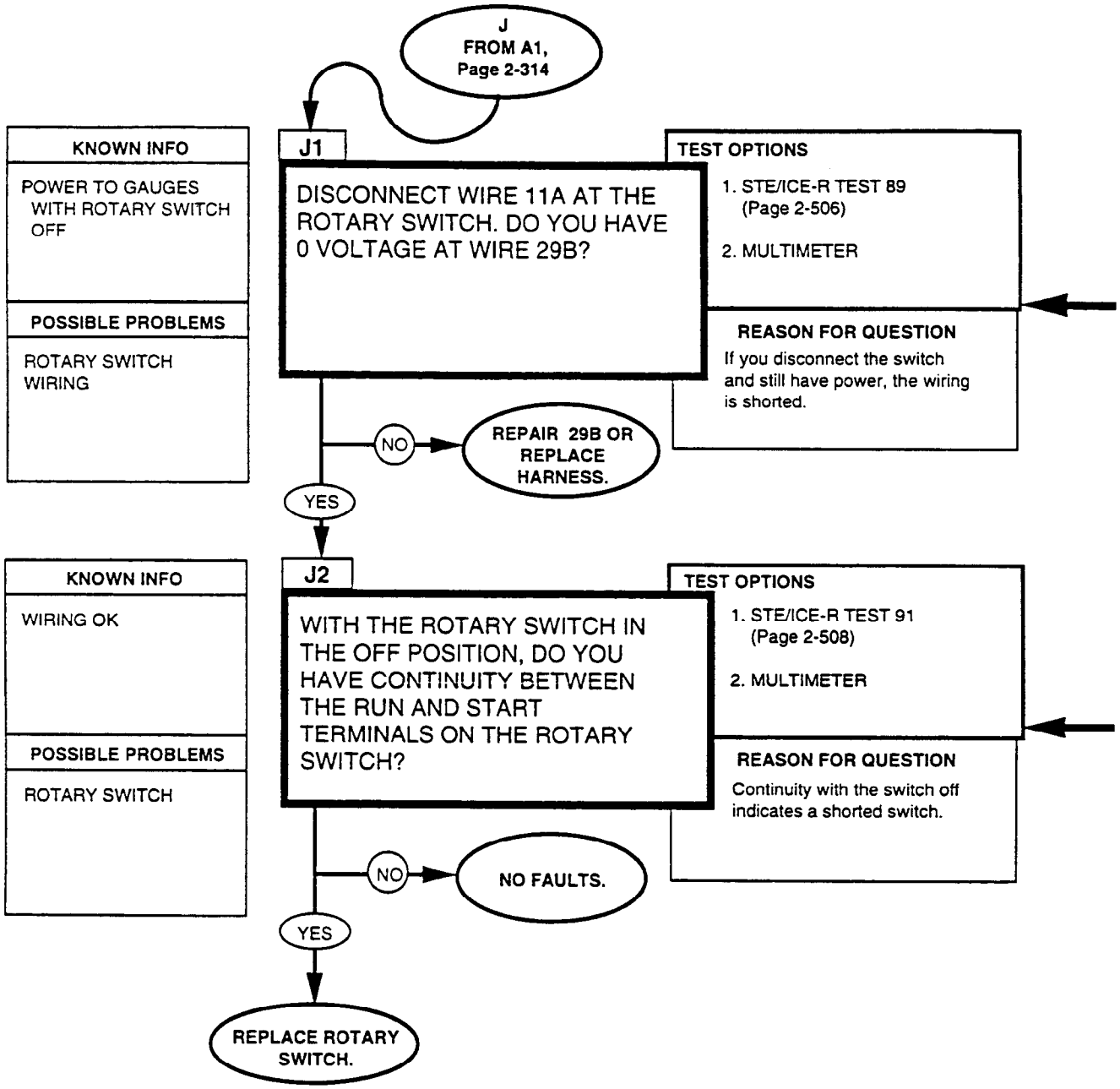

REFERENCE INFORMATION

INSTRUMENTS CIRCUIT

Replace harness or repair wiring (para. 4-80).

Replace rotary switch (para. 4-10).

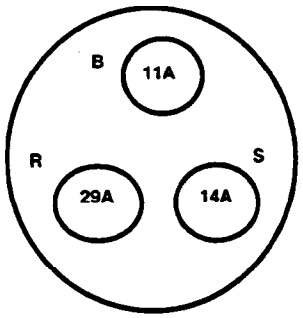

REAR OF ROTARY SWITCH

DC VOLTAGE 0-45 VOLTS
STE/ICE-R TEST 89

1. Connect RED clip to the indicated test point, BLACK clip to negative or ground.
2. Start Test 89, DC Volts.
3. Displayed reading is in volts.

BATTERY VOLTAGE
MULTIMETER

1. Set the voltmeter to a DC volts scale of at least 40 volts.
2. Connect the RED lead to positive and the BLACK lead to negative.
3. Be sure to read the correct scale.

RESISTANCE AND CONTINUITY
0-4,500 OHMS
STE/ICE-R TEST 91

1. Connect RED clip and BLACK clip to the indicated terminals in the question. RED to the first, BLACK to the second.
2. Start Test 91, 0-4500 Ohms.
3. Displayed reading is in ohms. Less than 5 ohms is continuity. If the resistance is over 4,500 ohms, STE/ICE-R displays .9.9.9.9.

CONTINUITY (RESISTANCE)
MULTIMETER

1. Set the voltmeter to an ohms scale of about 1,000 ohms.
2. Connect the RED and BLACK leads to the connections stated in the question.
3. Be sure to read the correct scale. Less than 5 ohms indicates continuity. For an open circuit, the meter should peg full scale (needle all the way to the left).

INSTRUMENTS CIRCUIT

DIAGNOSTIC FLOWCHART

L
FROM G3,
Page 2-338

L1

KNOWN INFO

WINDSHIELD WIPERS OK

POSSIBLE PROBLEMS

FUEL GAUGE
OIL PRESSURE GAUGE
TEMPERATURE GAUGE

DISCONNECT WIRE 28A AT THE FUEL SENDING UNIT HARNESS. IS THERE CONTINUITY BETWEEN THE ENDS OF WIRE 28A AT THE FUEL GAUGE AND AT THE FUEL SENDING UNIT HARNESS?

TEST OPTIONS

1. STE/ICE-R TEST 91 (Page 2-508)
2. MULTIMETER

REASON FOR QUESTION

If the wire is OK, the sense line from the sending unit to the gauge is OK.

NO → REPAIR WIRE 28A.

YES

L2

KNOWN INFO

WINDSHIELD WIPERS OK

POSSIBLE PROBLEMS

FUEL GAUGE
OIL PRESSURE GAUGE
TEMPERATURE GAUGE

IS THERE CONTINUITY BETWEEN WIRE 58C AT THE FUEL SENDING UNIT HARNESS AND BODY (OR ENGINE) GROUND?

TEST OPTIONS

1. STE/ICE-R TEST 91 (Page 2-508)
2. MULTIMETER

REASON FOR QUESTION

If the wire is OK, the sending unit ground is OK.

NO → REPAIR WIRE 58C.

YES

L3

KNOWN INFO

WINDSHIELD WIPERS OK

POSSIBLE PROBLEMS

FUEL GAUGE
OIL PRESSURE GAUGE
TEMPERATURE GAUGE

CHECK RESISTANCE ACROSS WIRE 28B & WIRE 58J AT THE FUEL SENDING UNIT HARNESS. IS THE RESISTANCE LESS THAN 50 OHMS?

TEST OPTIONS

1. STE/ICE-R TEST 91 (Page 2-508)
2. MULTIMETER

REASON FOR QUESTION

If the fuel sending unit is OK, it could have been bad connections.

NO → GO TO L4, Page 2-354

YES → NO FAULTS.

REFERENCE INFORMATION

INSTRUMENTS CIRCUIT

The connector is located above the driveshaft toward the rear of the vehicle.

Repair wiring (para. 4-80).

RESISTANCE AND CONTINUITY
0-4,500 OHMS
STE/ICE-R TEST 91

1. Connect RED clip and BLACK clip to the indicated terminals in the question. RED to the first, BLACK to the second.
2. Start Test 91, 0-4,500 Ohms.
3. Displayed reading is in ohms. Less than 5 ohms is continuity. If the resistance is over 4,500 ohms, STE/ICE-R displays .9.9.9.9.

Repair wiring (para. 4-80).

CONTINUITY (RESISTANCE)
MULTIMETER

1. Set the voltmeter to an ohms scale of about 1,000 ohms.
2. Connect the RED and BLACK leads to the connections stated in the question.
3. Be sure to read the correct scale. Less than 5 ohms indicates continuity. For an open circuit, the meter should peg full scale (needle all the way to the left).

GAUGE READING	OHMS
FULL	35
HALF	16
EMPTY	0

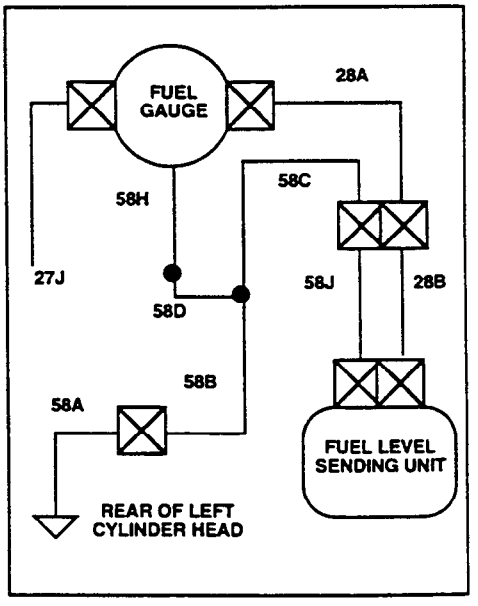

INSTRUMENTS CIRCUIT

DIAGNOSTIC FLOWCHART

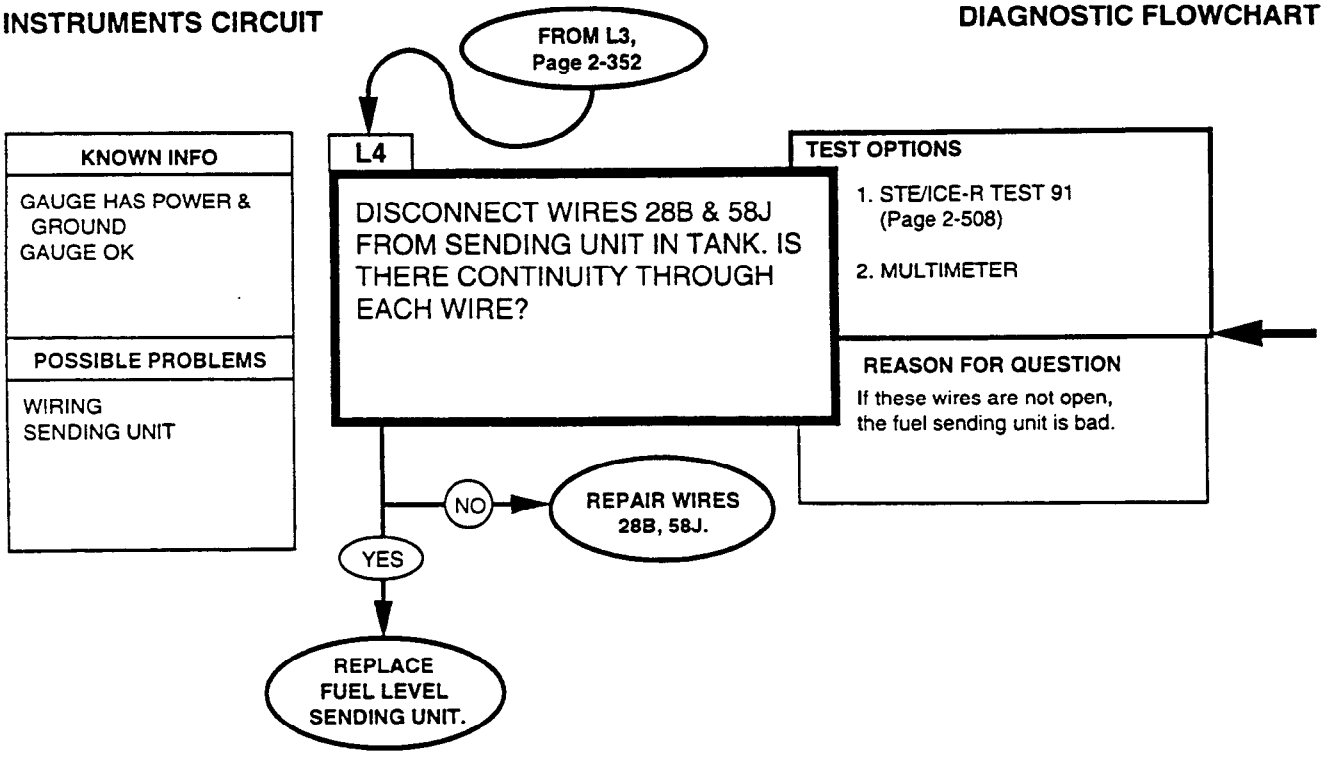

REFERENCE INFORMATION

INSTRUMENTS CIRCUIT

In order to reach these wires and the sending unit, you have to remove the fuel tank (para. 3-25). You may want to recheck the previous steps to be sure you didn't miss anything before you proceed with this step.

Replace fuel level sending unit and repair wiring (paras. 4-32 and 4-80).

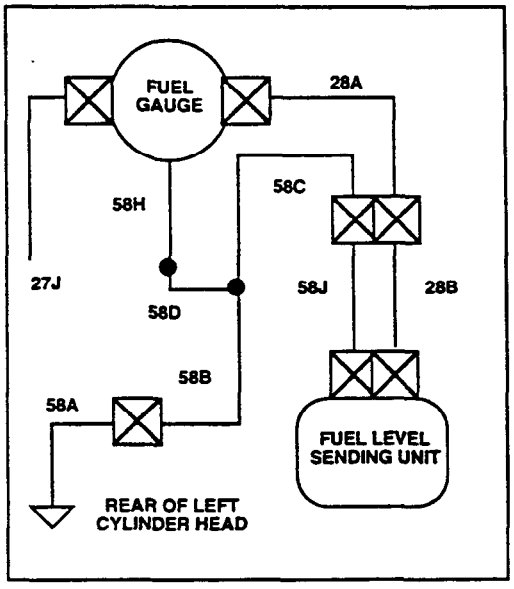

RESISTANCE AND CONTINUITY
0-4,500 OHMS
STE/ICE-R TEST 91

1. Connect RED clip and BLACK clip to the I indicated terminals in the question. RED to the first, BLACK to the second.
2. Start Test 91, 0-4,500 Ohms.
3. Displayed reading is in ohms. Less than 5 ohms is continuity. If the resistance is over 4,500 ohms, STE/ICE-R displays .9.9.9.9.

CONTINUITY (RESISTANCE)
MULTIMETER

1. Set the voltmeter to an ohms scale of about 1,000 ohms.
2. Connect the RED and BLACK leads to the connections stated in the question.
3. Be sure to read the correct scale. Less than 5 ohms indicates continuity. For an open circuit, the meter should peg full scale (needle all the way to the left).

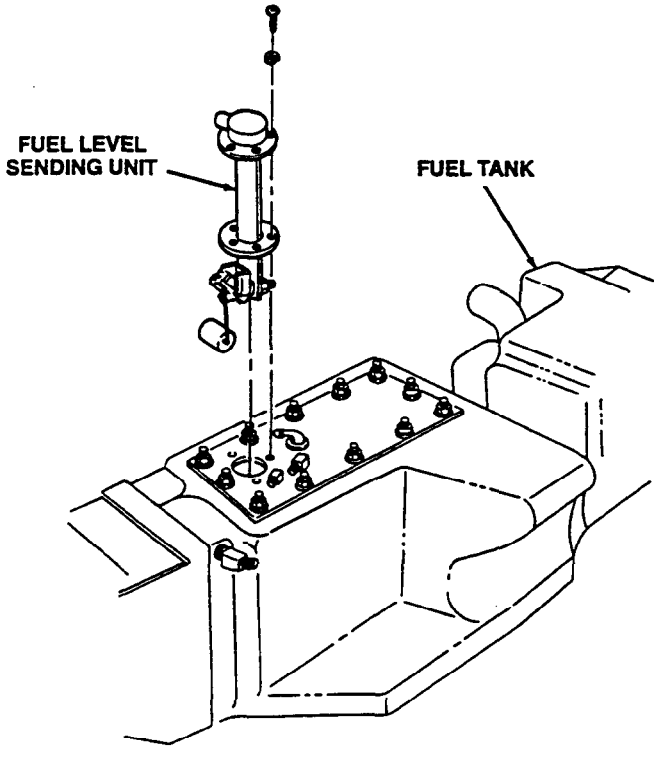

INSTRUMENTS CIRCUIT **DIAGNOSTIC FLOWCHART**

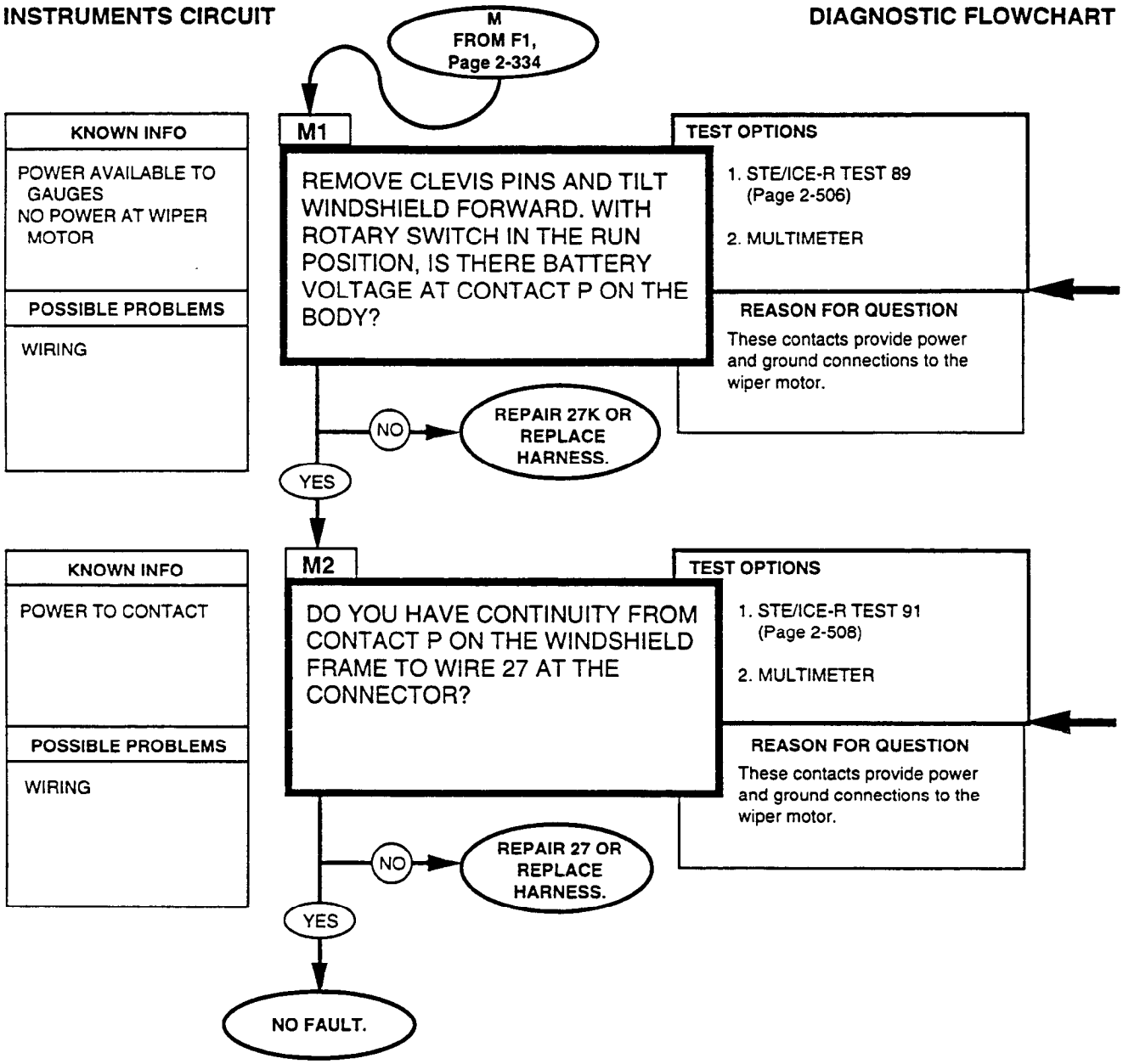

REFERENCE INFORMATION

INSTRUMENTS CIRCUIT

Make sure these contacts are clean. Otherwise, the wiper motor may not have power or ground.

Replace harness or repair wiring (para. 4-80).

DC VOLTAGE 0-45 VOLTS
STE/ICE-R TEST 89

1. Connect RED clip to the indicated test point, BLACK clip to negative or ground.
2. Start Test 89, DC Volts.
3. Displayed reading is in volts.

BATTERY VOLTAGE
MULTIMETER

1. Set the voltmeter to a DC volts scale of at least 40 volts.
2. Connect the RED lead to positive and the BLACK lead to negative.
3. Be sure to read the correct scale.

Replace harness or repair wiring (para. 4-80).

RESISTANCE AND CONTINUITY
0-4,500 OHMS
STE/ICE-R TEST 91

1. Connect RED clip and BLACK clip to the indicated terminals in the question. RED to the first, BLACK to the second.
2. Start Test 91, 0-4,500 Ohms.
3. Displayed reading is in ohms. Less than 5 ohms is continuity. If the resistance is over 4,500 ohms, STE/ICE-R displays .9.9.9.9.

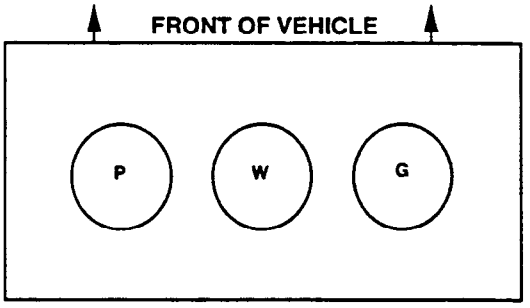

WINDSHIELD CONNECTOR
AS VIEWED FROM ABOVE

CONTINUITY (RESISTANCE)
MULTIMETER

1. Set the voltmeter to an ohms scale of about 1,000 ohms.
2. Connect the RED and BLACK leads to the connections stated in the question.
3. Be sure to read the correct scale. Less than 5 ohms indicates continuity. For an open circuit, the meter should peg full scale (needle all the way to the left).

INSTRUMENTS CIRCUIT

DIAGNOSTIC FLOWCHART

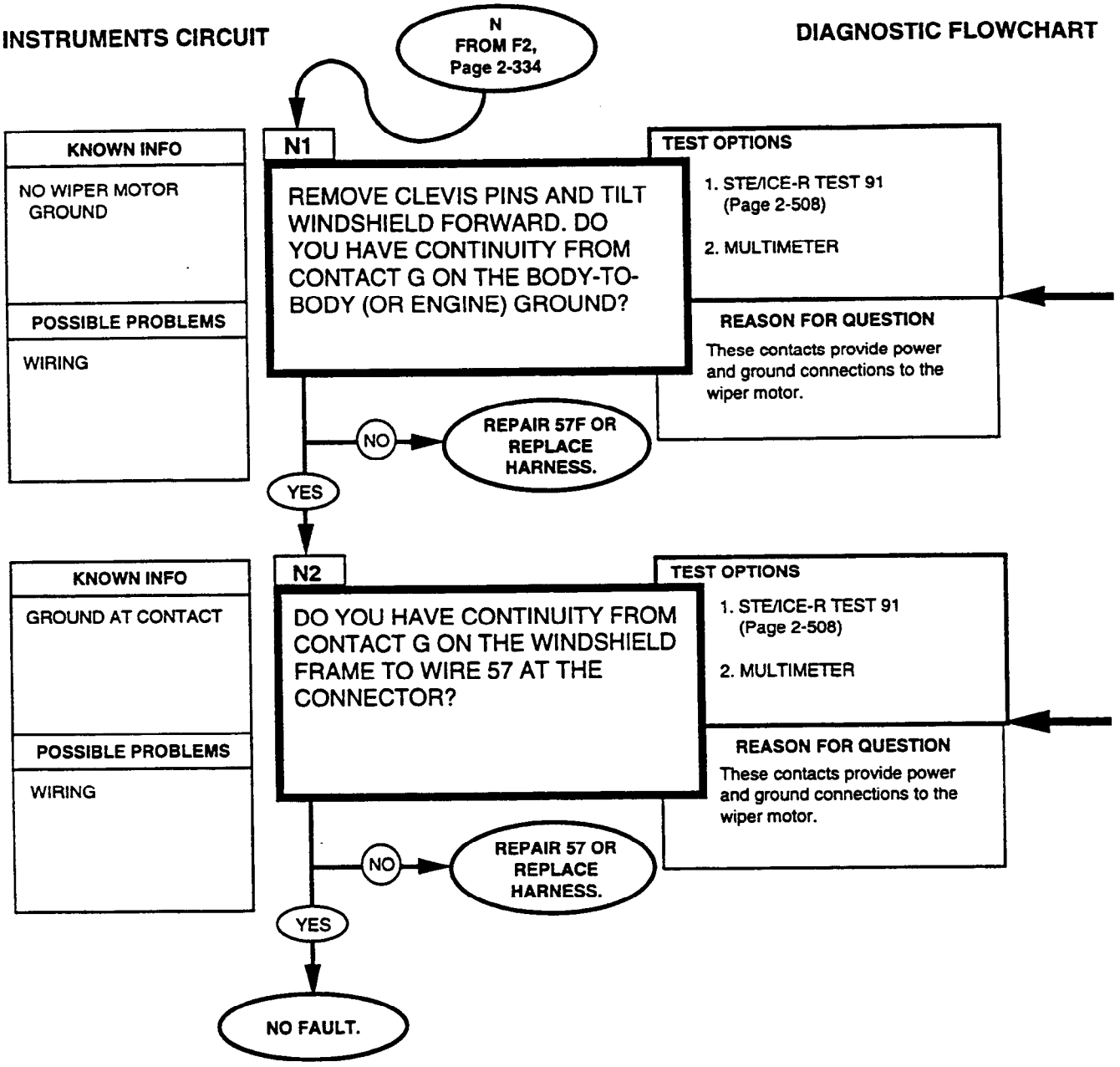

REFERENCE INFORMATION

INSTRUMENTS CIRCUIT

Make sure these contacts are clean. Otherwise, the wiper motor may not have power or ground.

Replace harness or repair wiring (para. 4-80).

RESISTANCE AND CONTINUITY
0-4,500 OHMS
STE/ICE-R TEST 91

1. Connect RED clip and BLACK clip to the indicated terminals in the question. RED to the first, BLACK to the second.
2. Start Test 91, 0-4,500 Ohms.
3. Displayed reading is in ohms. Less than 5 ohms is continuity. If the resistance is over 4,500 ohms, STE/ICE-R displays .9.9.9.9.

Replace harness or repair wiring (para 4-80).

CONTINUITY (RESISTANCE)
MULTIMETER

1. Set the voltmeter to an ohms scale of about 1,000 ohms.
2. Connect the RED and BLACK leads to the connections stated in the question.
3. Be sure to read the correct scale. Less than 5 ohms indicates continuity. For an open circuit, the meter should peg full scale (needle all the way to the left).

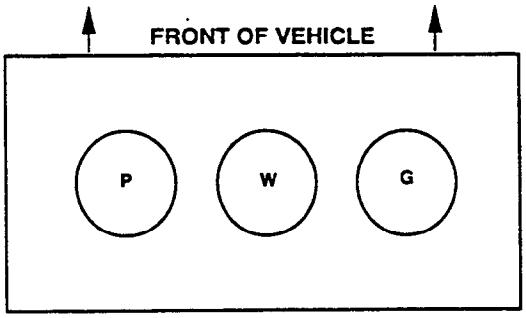

WINDSHIELD CONNECTOR
AS VIEWED FROM ABOVE

INSTRUMENTS CIRCUIT **DIAGNOSTIC FLOWCHART**

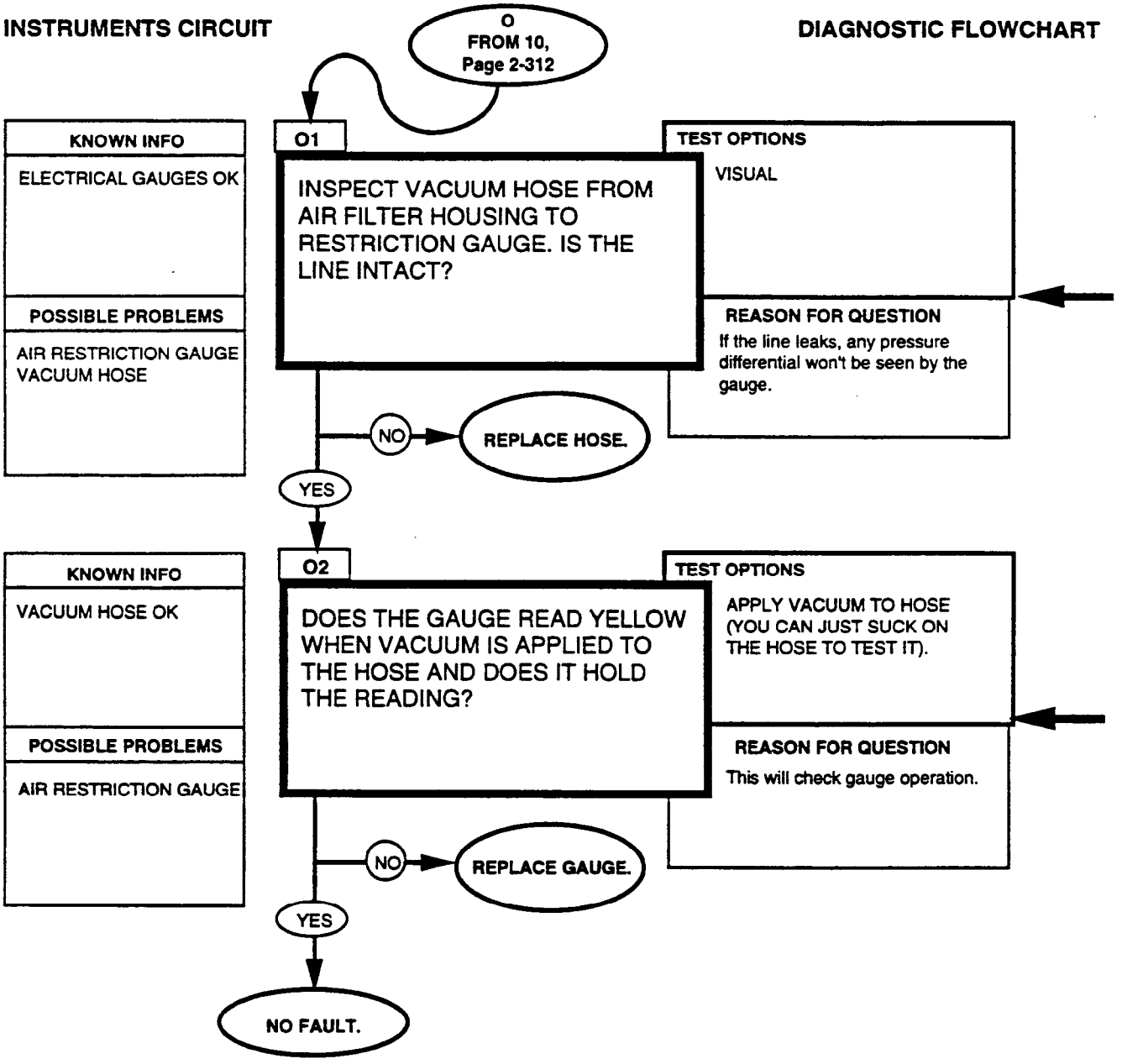

REFERENCE INFORMATION

INSTRUMENTS CIRCUIT

You can provide enough vacuum to operate the gauge by sucking on the hose.

Replace vacuum hose (para. 3-20).

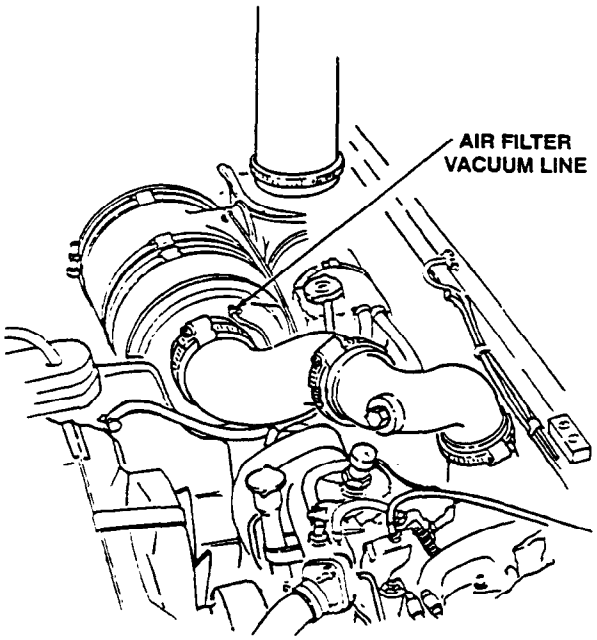

Replace air restriction gauge (para. 3-17).

INSTRUMENTS CIRCUIT

DIAGNOSTIC FLOWCHART

P
FROM 11,
Page 2-312

P1

KNOWN INFO

AIR FILTER RESTRICTION GAUGE OK
VACUUM TUBE OK

POSSIBLE PROBLEMS

WIRING
SWITCH
MOTOR
CIRCUIT BREAKER 1
PCB

REMOVE WIRE 27C FROM CIRCUIT BREAKER 1. WITH THE ROTARY SWITCH IN THE RUN POSITION, IS THERE BATTERY VOLTAGE AT WIRE 27C AT CIRCUIT BREAKER 1?

TEST OPTIONS

1. STE/ICE-R TEST 89 (Page 2-506)
2. MULTIMETER

REASON FOR QUESTION

Voltage here indicates that wiring to the circuit breaker is OK.

NO → GO TO Q, Page 2-366

YES ↓

P2

KNOWN INFO

WIRE 27C OK

POSSIBLE PROBLEMS

WIRING
SWITCH
MOTOR
CIRCUIT BREAKER 1
PCB

RECONNECT WIRE 27C. REMOVE WIRE 27D FROM THE HEATER FAN SWITCH. WITH THE ROTARY SWITCH IN THE RUN POSITION, IS THERE BATTERY VOLTAGE AT WIRE 27D?

TEST OPTIONS

1. STE/ICE-R TEST 89 (Page 2-506)
2. MULTIMETER

REASON FOR QUESTION

If you have voltage here, the circuit breaker and wiring to the switch is OK.

NO → GO TO R, Page 2-368

YES ↓

P3

KNOWN INFO

WIRE 27C OK
WIRE 27D OK
CIRCUIT BREAKER 1 OK

POSSIBLE PROBLEMS

WIRING
SWITCH
MOTOR
PCB

RECONNECT WIRE 27D. REMOVE WIRE 400D FROM THE HEATER FAN MOTOR. WITH THE ROTARY SWITCH IN THE RUN POSITION AND THE HEATER FAN SWITCH ON HIGH, IS THERE BATTERY VOLTAGE AT WIRE 400D?

TEST OPTIONS

1. STE/ICE-R TEST 89 (Page 2-506)
2. MULTIMETER

REASON FOR QUESTION

Voltage here indicates that wiring to the heater fan motor is OK.

NO → GO TO S, Page 2-370

YES ↓

GO TO P4, Page 2-364

REFERENCE INFORMATION

INSTRUMENTS CIRCUIT

The easiest way to reach the circuit breaker is to remove the gauge panel screws and pull the panel out far enough to work with the wiring.

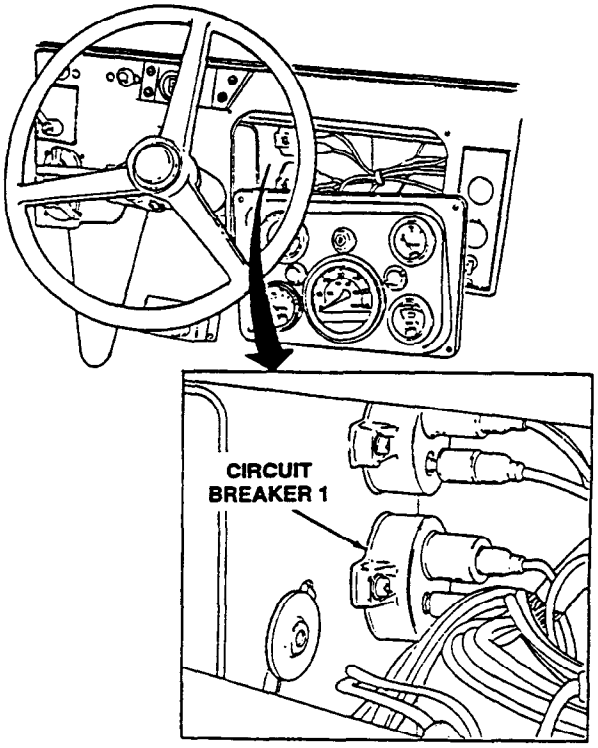

DC VOLTAGE 0-45 VOLTS STE/ICE-R TEST 89
1. Connect RED clip to the indicated test point, BLACK clip to negative or ground. 2. Start Test 89, DC Volts. 3. Displayed reading is in volts.

BATTERY VOLTAGE MULTIMETER
1. Set the voltmeter to a DC volts scale of at least 40 volts. 2. Connect the RED lead to positive and the BLACK lead to negative. 3. Be sure to read the correct scale.

The heater motor is located directly in front of the passenger seat under the instrument panel, connected to the heating ducts.

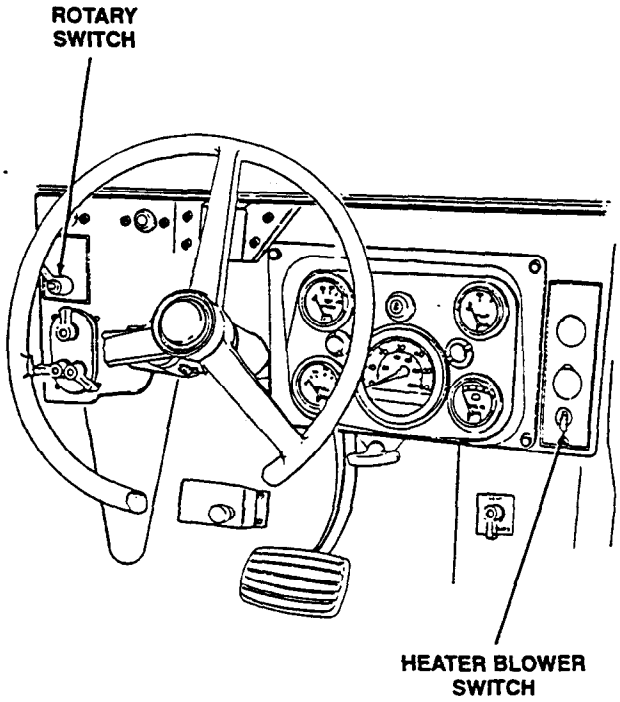

INSTRUMENTS CIRCUIT

DIAGNOSTIC FLOWCHART

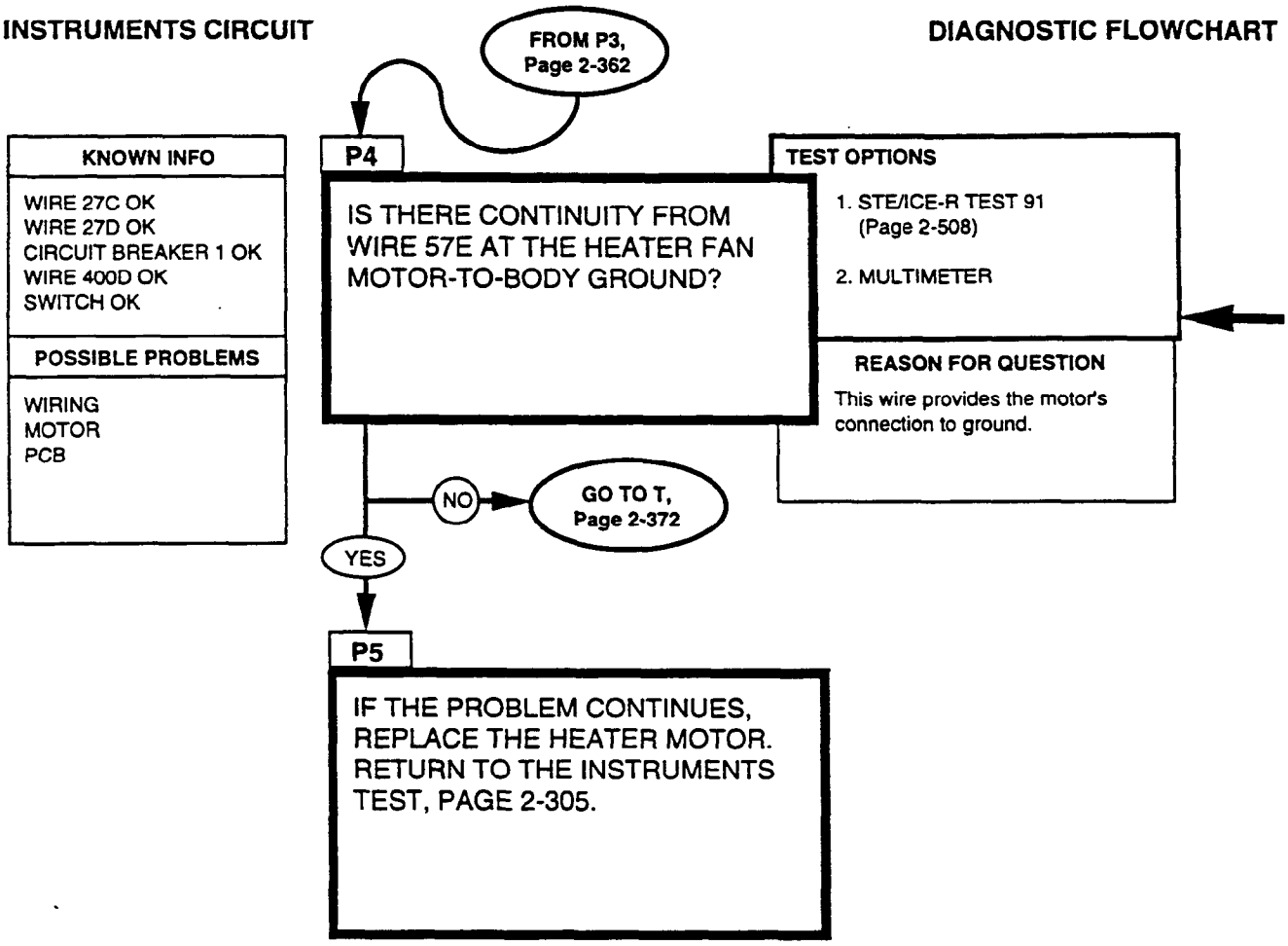

REFERENCE INFORMATION

INSTRUMENTS CIRCUIT

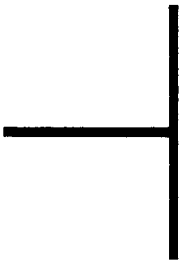

RESISTANCE AND CONTINUITY
0-4,500 OHMS
STE/ICE-R TEST 91

1. Connect RED clip and BLACK clip to the indicated terminals in the question. RED to the first, BLACK to the second.
2. Start Test 91, 0-4,500 Ohms.
3. Displayed reading is in ohms. Less than 5 ohms is continuity. If the resistance is over 4,500 ohms, STE/ICE-R displays .9.9.9.9.

CONTINUITY (RESISTANCE)
MULTIMETER

1. Set the voltmeter to an ohms scale of about 1,000 ohms.
2. Connect the RED and BLACK leads to the connections stated in the question.
3. Be sure to read the correct scale. Less than 5 ohms indicates continuity. For an open circuit, the meter should peg full scale (needle all the way to the left).

INSTRUMENTS CIRCUIT **DIAGNOSTIC FLOWCHART**

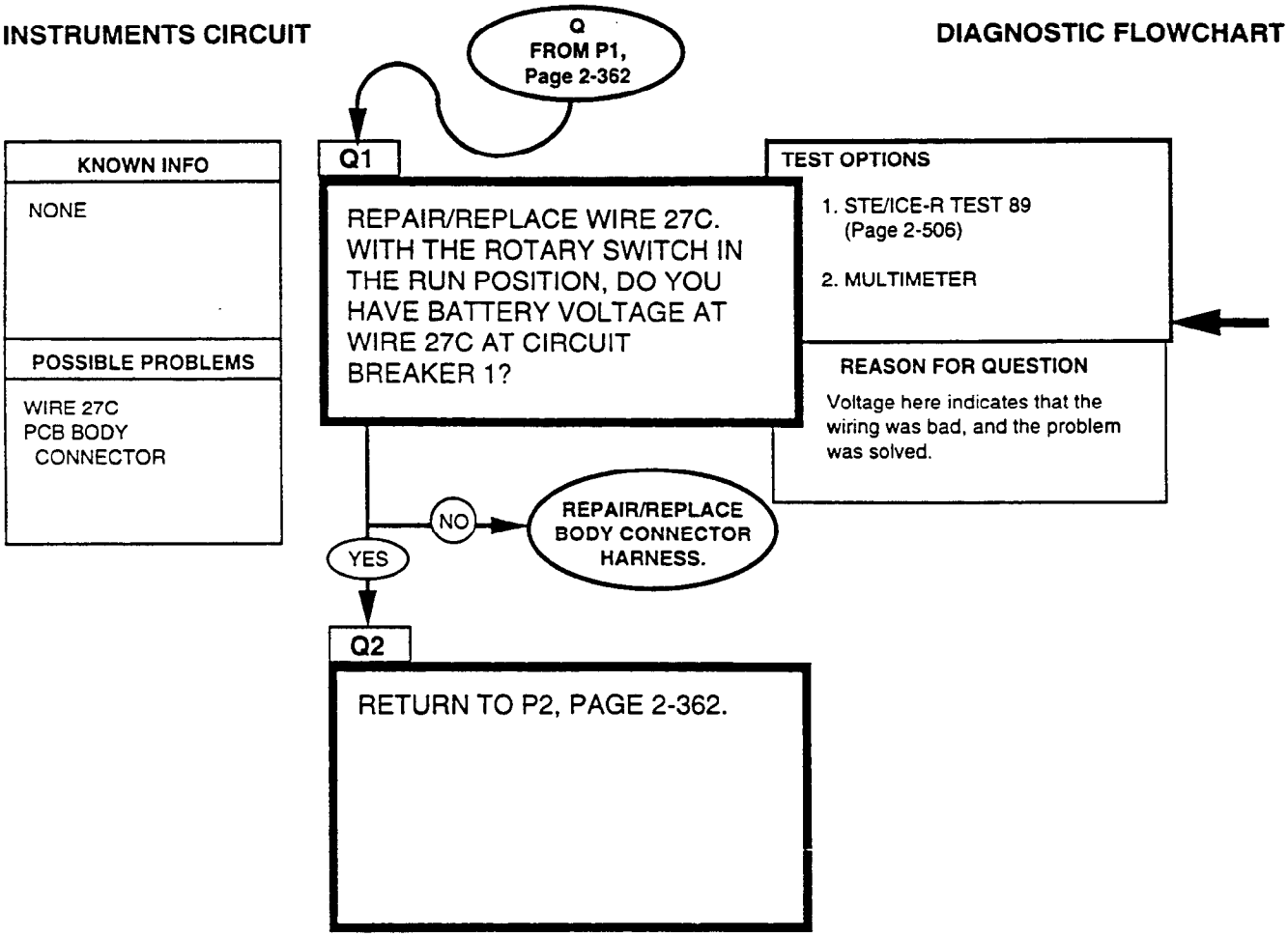

REFERENCE INFORMATION

Replace harness or repair wiring (para. 4-80).

INSTRUMENTS CIRCUIT

DC VOLTAGE 0-45 VOLTS
STE/ICE-R TEST 89

1. Connect RED clip to the indicated test point, BLACK clip to negative or ground.
2. Start Test 89, DC Volts.
3. Displayed reading is in volts.

BATTERY VOLTAGE
MULTIMETER

1. Set the voltmeter to a DC volts scale of at least 40 volts.
2. Connect the RED lead to positive and the BLACK lead to negative.
3. Be sure to read the correct scale.

INSTRUMENTS CIRCUIT

DIAGNOSTIC FLOWCHART

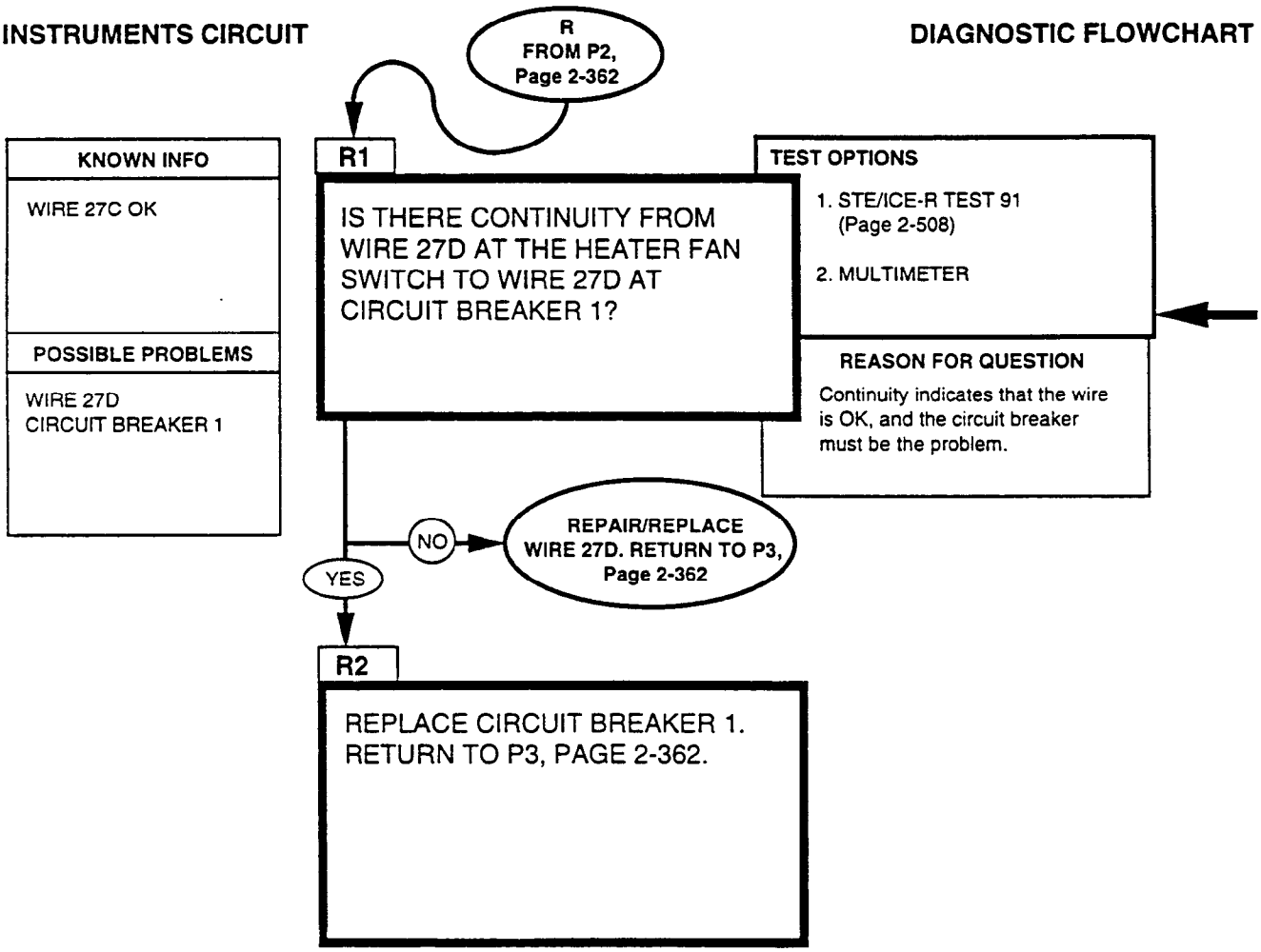

REFERENCE INFORMATION

Replace harness or repair wiring (para. 4-80).

INSTRUMENTS CIRCUIT

RESISTANCE AND CONTINUITY
0-4,500 OHMS
STE/ICE-R TEST 91

1. Connect RED clip and BLACK clip to the indicated test points in the question. RED to the first, BLACK to the second.
2. Start Test 91, 0-4,500 Ohms.
3. Displayed reading is in ohms. Less than 5 ohms is continuity. If the resistance is over 4,500 ohms, STE/ICE-R displays .9.9.9.9.

CONTINUITY (RESISTANCE)
MULTIMETER

1. Set the voltmeter to an ohms scale of about 1,000 ohms.
2. Connect the RED and BLACK leads to the connections stated in the question.
3. Be sure to read the correct scale. Less than 5 ohms indicates continuity. For an open circuit, the meter should peg full scale (needle all the way to the left).

INSTRUMENTS CIRCUIT

DIAGNOSTIC FLOWCHART

KNOWN INFO

WIRE 27C OK
WIRE 27D OK
CIRCUIT BREAKER 1 OK

POSSIBLE PROBLEMS

WIRE 400D
SWITCH

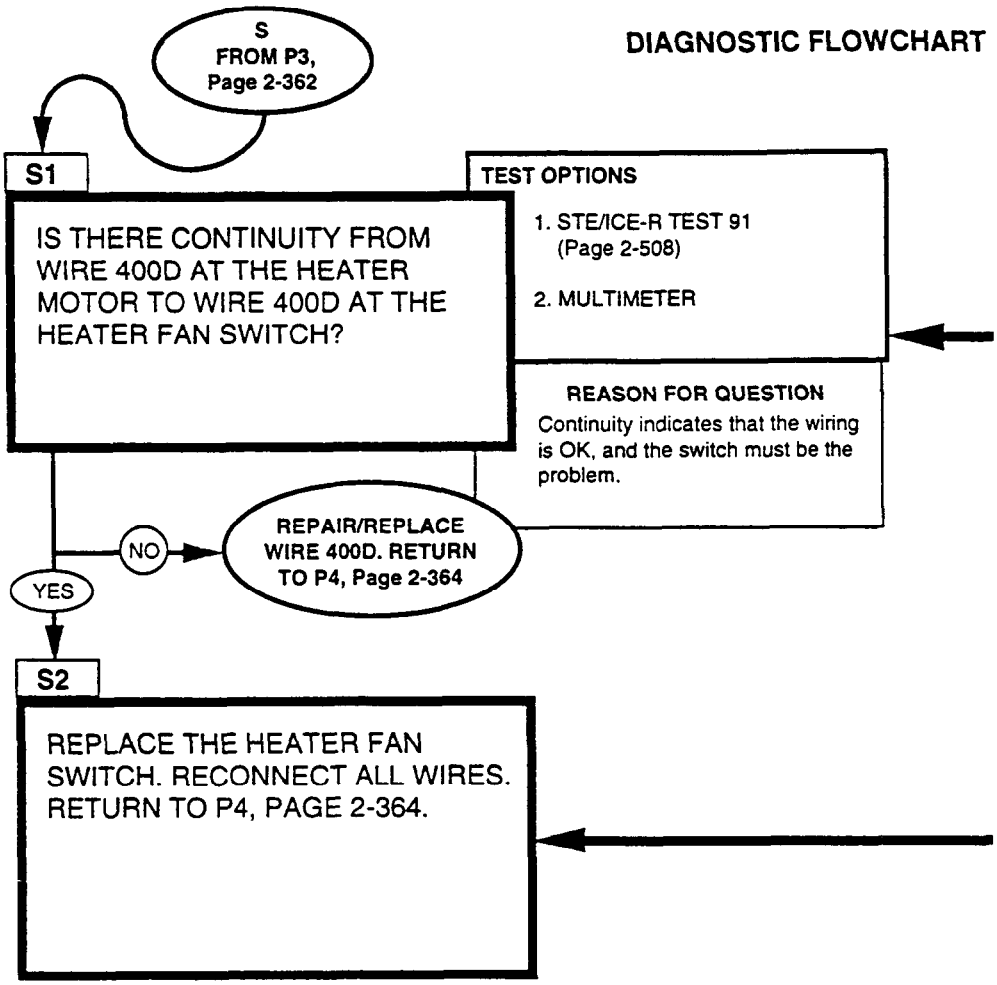

REFERENCE INFORMATION

Repair wire or replace harness (para. 4-80).

Replace heater fan switch (para. 10-73).

INSTRUMENTS CIRCUIT

RESISTANCE AND CONTINUITY
0-4,500 OHMS
STE/ICE-R TEST 91

1. Connect RED clip and BLACK clip to the indicated test points in the question. RED to the first, BLACK to the second.
2. Start Test 91, 0-4,500 Ohms.
3. Displayed reading is in ohms. Less than 5 ohms is continuity. If the resistance is over 4,500 ohms, STE/ICE-R displays .9.9.9.9.

CONTINUITY (RESISTANCE)
MULTIMETER

1. Set the voltmeter to an ohms scale of about 1,000 ohms.
2. Connect the RED and BLACK leads to the connections stated in the question.
3. Be sure to read the correct scale. Less than 5 ohms indicates continuity. For an open circuit, the meter should peg full scale (needle all the way to the left).

INSTRUMENTS CIRCUIT

DIAGNOSTIC FLOWCHART

KNOWN INFO

WIRE 27C OK
WIRE 27D OK
CIRCUIT BREAKER 1 OK
WIRE 400D OK
SWITCH OK

POSSIBLE PROBLEMS

WIRE 57E
PCB BODY
CONNECTOR

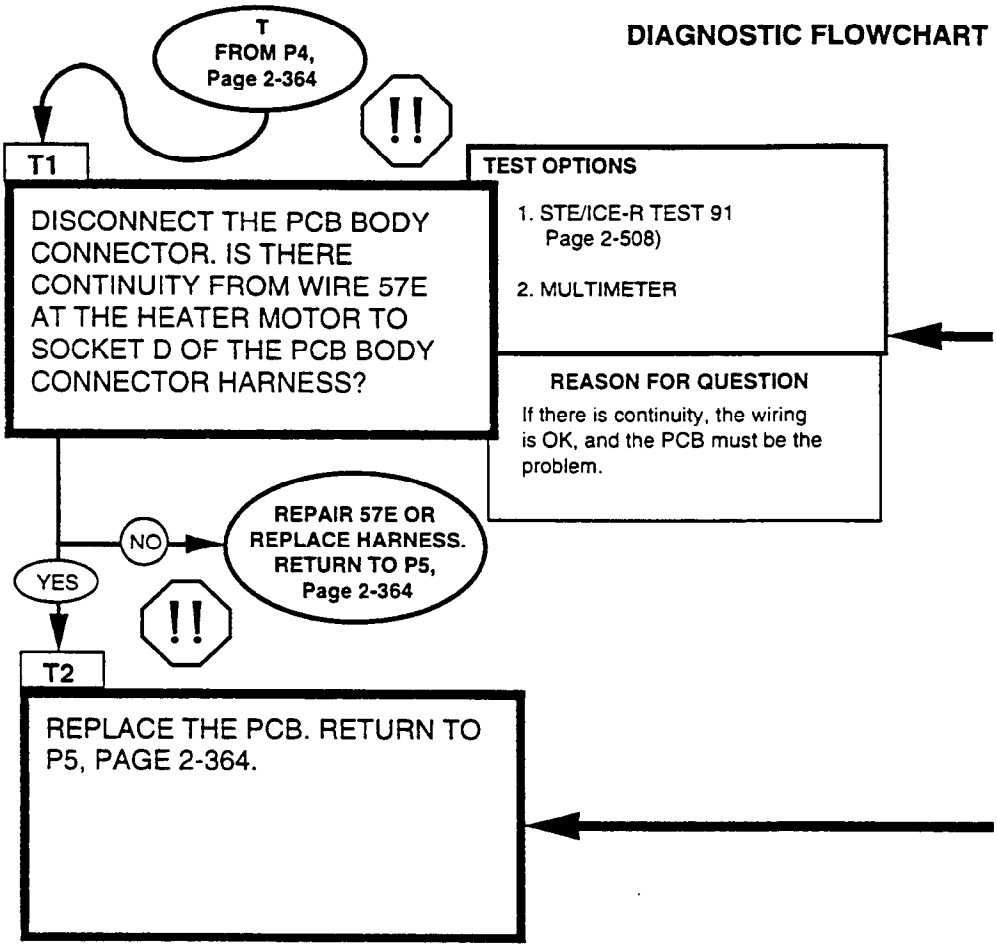

WARNING

Disconnect negative battery cable before disconnecting and reconnecting PCB harness.

WARNING

There is battery voltage at the PCB at all times. Failure to disconnect battery cable will result in damage to equipment or injury to personnel.

Replace harness or repair wiring (para. 4-80).

RESISTANCE AND CONTINUITY
0-4,500 OHMS
STE/ICE-R TEST 91

1. Connect RED clip and BLACK clip to the indicated terminals in the question. RED to the first, BLACK to the second.
2. Start Test 91, 0-4,500 Ohms.
3. Displayed reading is in ohms. Less than 5 ohms is continuity. If the resistance is over 4,500 ohms, STE/ICE-R displays .9.9.9.9.

WARNING

Disconnect negative battery cable before disconnecting and reconnecting PCB harness.

WARNING

There is battery voltage at the PCB at all times. Failure to disconnect battery cable will result in damage to equipment or injury to personnel.

Replace the PCB (para. 4-4).

CONTINUITY (RESISTANCE)
MULTIMETER

1. Set the voltmeter to an ohms scale of about 1,000 ohms.
2. Connect the RED and BLACK leads to the connections stated in the question.
3. Be sure to read the correct scale. Less than 5 ohms indicates continuity. For an open circuit, the meter should peg full scale (needle all the way to the left).

2-39. LIGHTS TESTS

The lights tests have almost no flow chart to guide you through a problem.This is because there aren't very many problems that can occur. The most common problems are burned-out bulbs and loose or corroded connections. Aside from bulbs and wiring, the only components are the Protective Control Box and the lights switch. If either of these is found to be faulty, you just replace the bad unit. On the following pages you will find diagrams of the major portions of the lights circuit. These are designed to help you isolate a problem without wasting too much time.

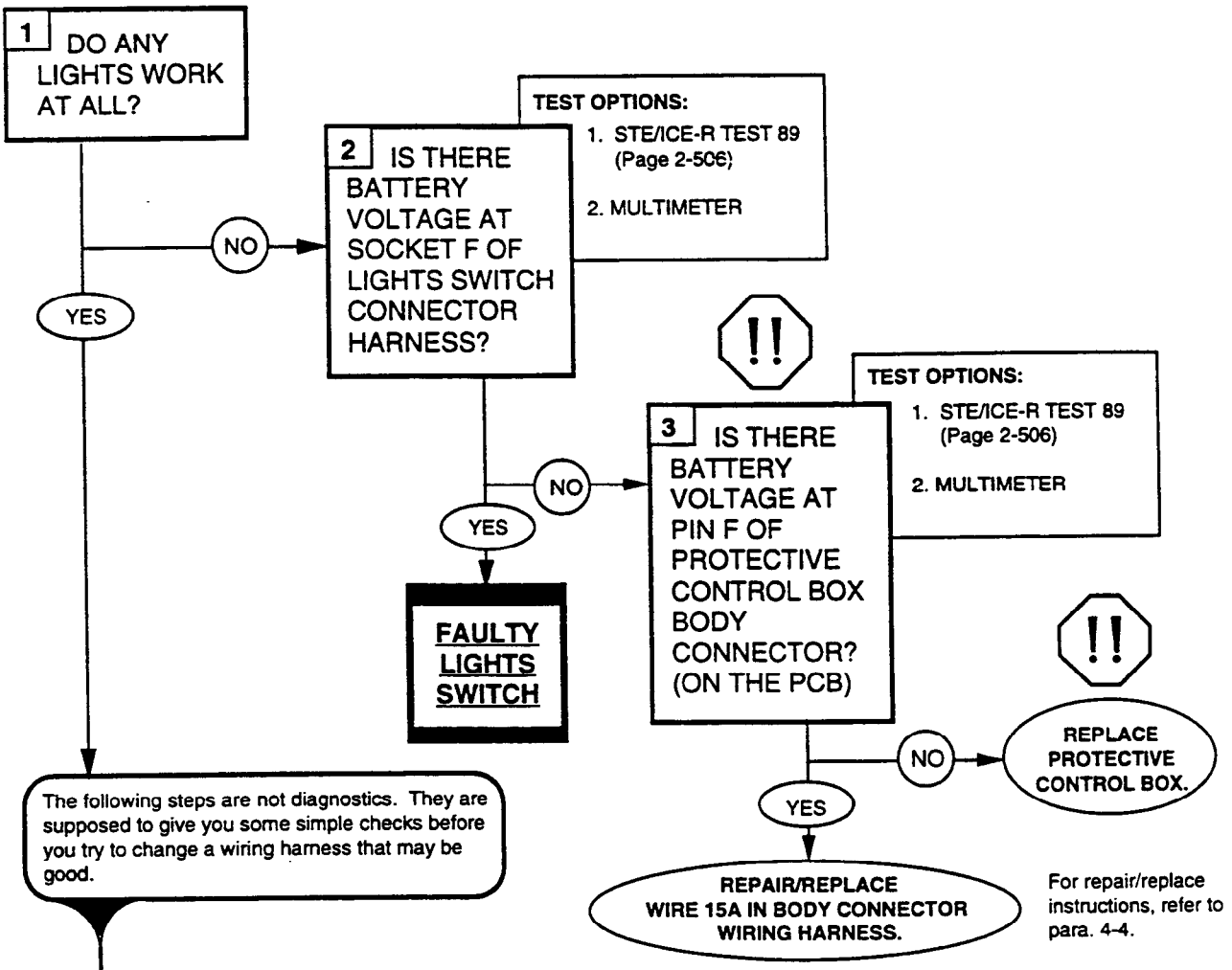

The following steps are not diagnostics. They are supposed to give you some simple checks before you try to change a wiring harness that may be good.

1. Make sure that what you want to be on is supposed to be on. Check the switches (lights, high-low beam, etc.).
2. Check the socket and connection(s) for corrosion, cracks, or loose parts. Repair or replace any damaged components.
3. Try replacing the bulb that doesn't work with a bulb that you know works.
4. If the connections look good and a known good bulb doesn't work, you have to start checking voltage and continuity.
   a) Check for battery voltage (STE/ICE-R TEST 89, Page 2-506) at the light socket; there may be a fault in the wiring harness.
   b) Check for continuity to ground (STE/ICE-R TEST 91, Page 2-508) from the light socket; there may be a missing connection to ground.
   c) Go to the wiring diagram(s) for more help.

WARNING

Disconnect nefative battery cable before disconnecting and reconnecting PCB harness.

WARNING

There is battery voltage at the PCB at all times. Failure to disconnect battery cable will result in damage to equipment or injury to personnel.

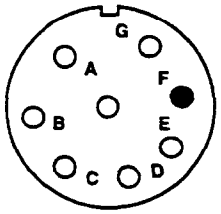

PCB BODY CONNECTOR

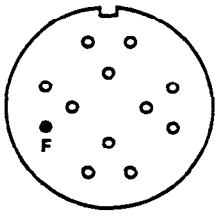

LIGHT SWITCH CONNECTOR HARNESS

RESISTANCE AND CONTINUITY
0-4,500 OHMS
STE/ICE-R TEST 91

1. Connect RED clip and BLACK clip to the indicated terminals in the question.
2. Start Test 91, 0-4,500 Ohms.
3. Displayed reading is in ohms. Less than 5 ohms is continuity. If the resistance is over 4,500 ohms, STE/ICE-R displays .9.9.9.9.

DC VOLTAGE 0-45 VOLTS
STE/ICE-R TEST 89

1. Connect RED clip to positive, BLACK clip to negative or ground.
2. Start Test 89, DC Volts.
3. Displayed reading is in volts.

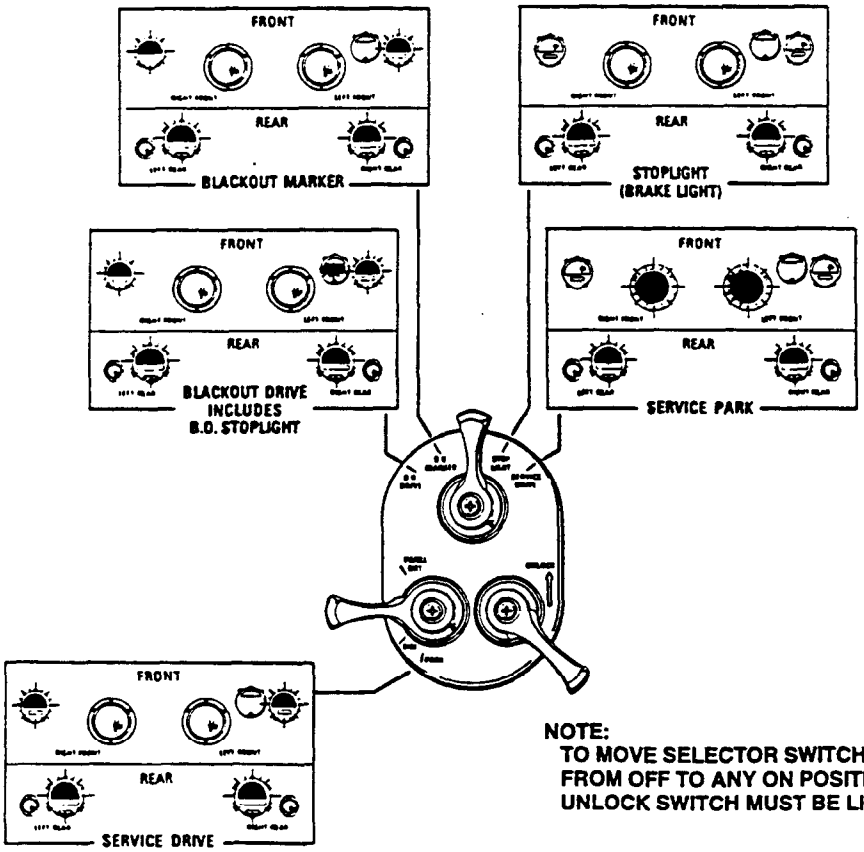

NOTE:
TO MOVE SELECTOR SWITCH LEVER FROM OFF TO ANY ON POSITION EXCEPT B.O. MARKER, UNLOCK SWITCH MUST BE LIFTED TO UNLOCK.

LIGHTS

REAR LIGHTS

(NOT INCLUDING BACKUP LAMPS AND SIDE MARKERS)

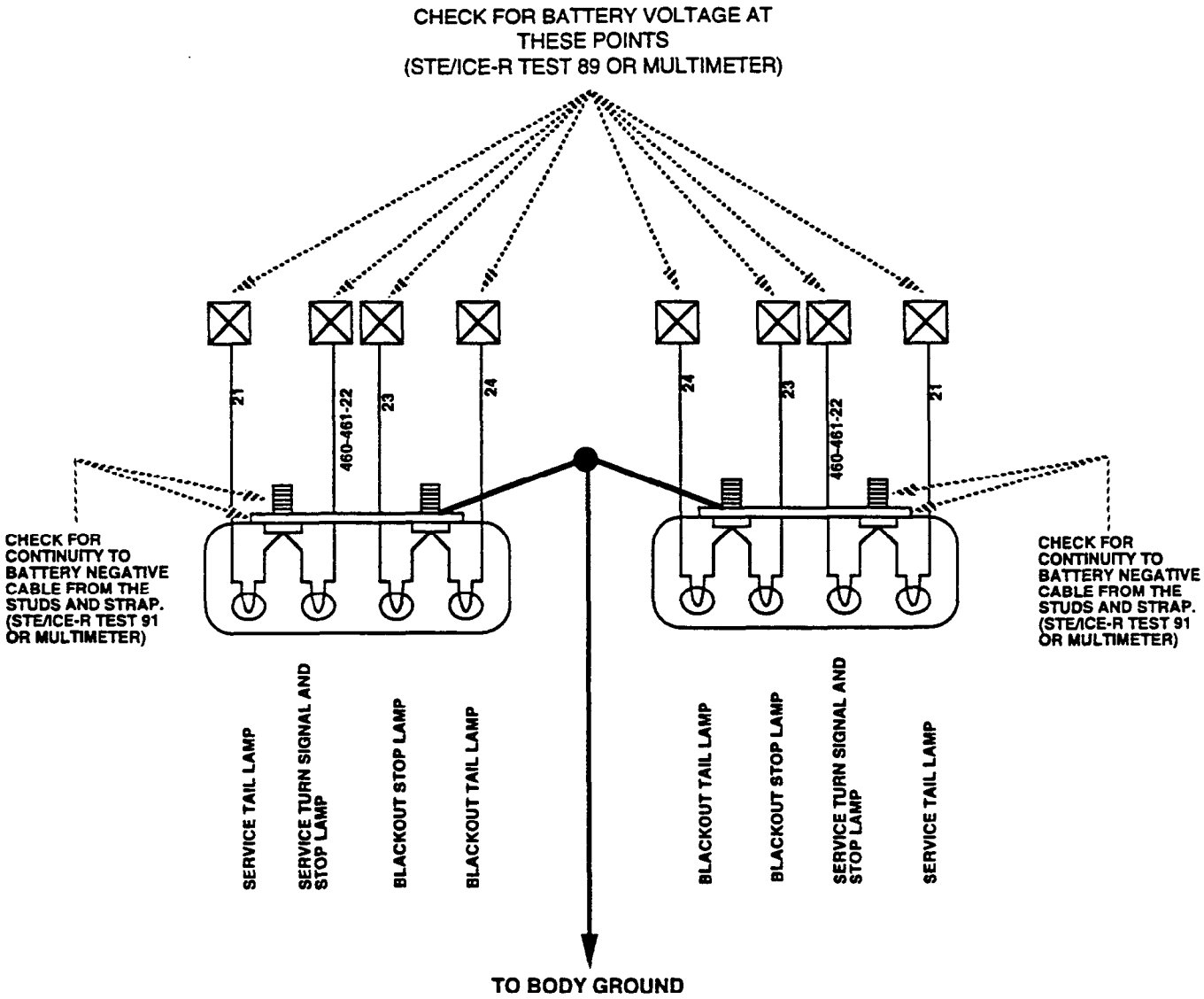

1. WHEN CHECKING FOR VOLTAGE, MAKE SURE THAT THE LAMP YOU ARE CHECKING IS SUPPOSED TO BE ON (CHECK THE LIGHTS SWITCH, TURN SIGNAL SWITCH, TRANSMISSION, ETC.).

CAUTION

Disconnect negative battery cable prior to making continuity measurements.

2. CHECK CONTINUITY TO BODY GROUND.

BACKUP LAMPS AND REAR SIDE MARKERS

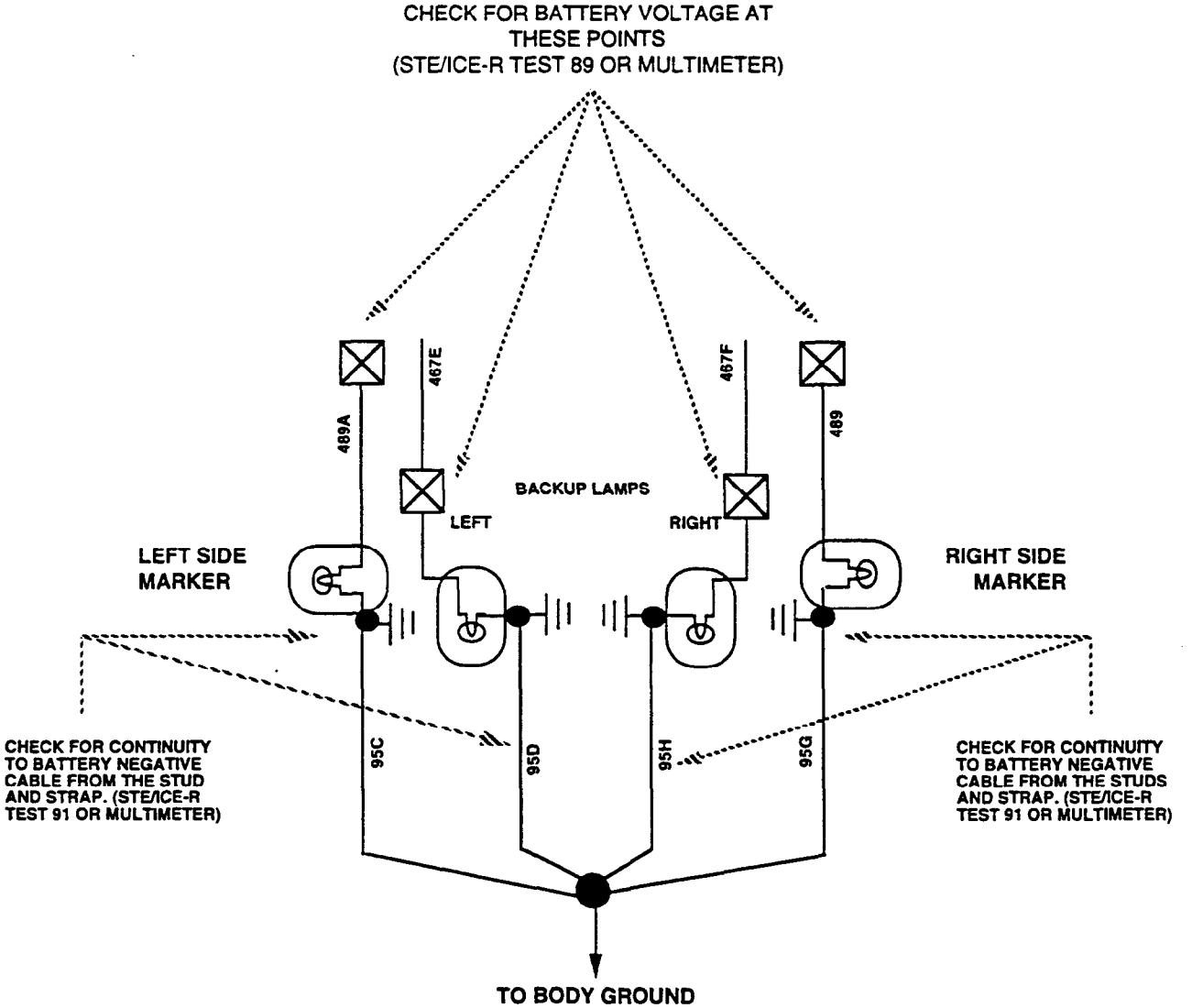

1. WHEN CHECKING FOR VOLTAGE, MAKE SURE THAT THE LAMP YOU ARE CHECKING IS SUPPOSED TO BE ON (CHECK THE LIGHTS SWITCH, TURN SIGNAL SWITCH, TRANSMISSION, ETC.).

CAUTION

Disconnect negative battery cable prior to making continuity measurements.

2. CHECK CONTINUITY TO BODY GROUND.

LIGHTS

FRONT LIGHTS

(PARK LIGHTS, TURN SIGNAL LAMPS, BLACKOUT MARKERS)

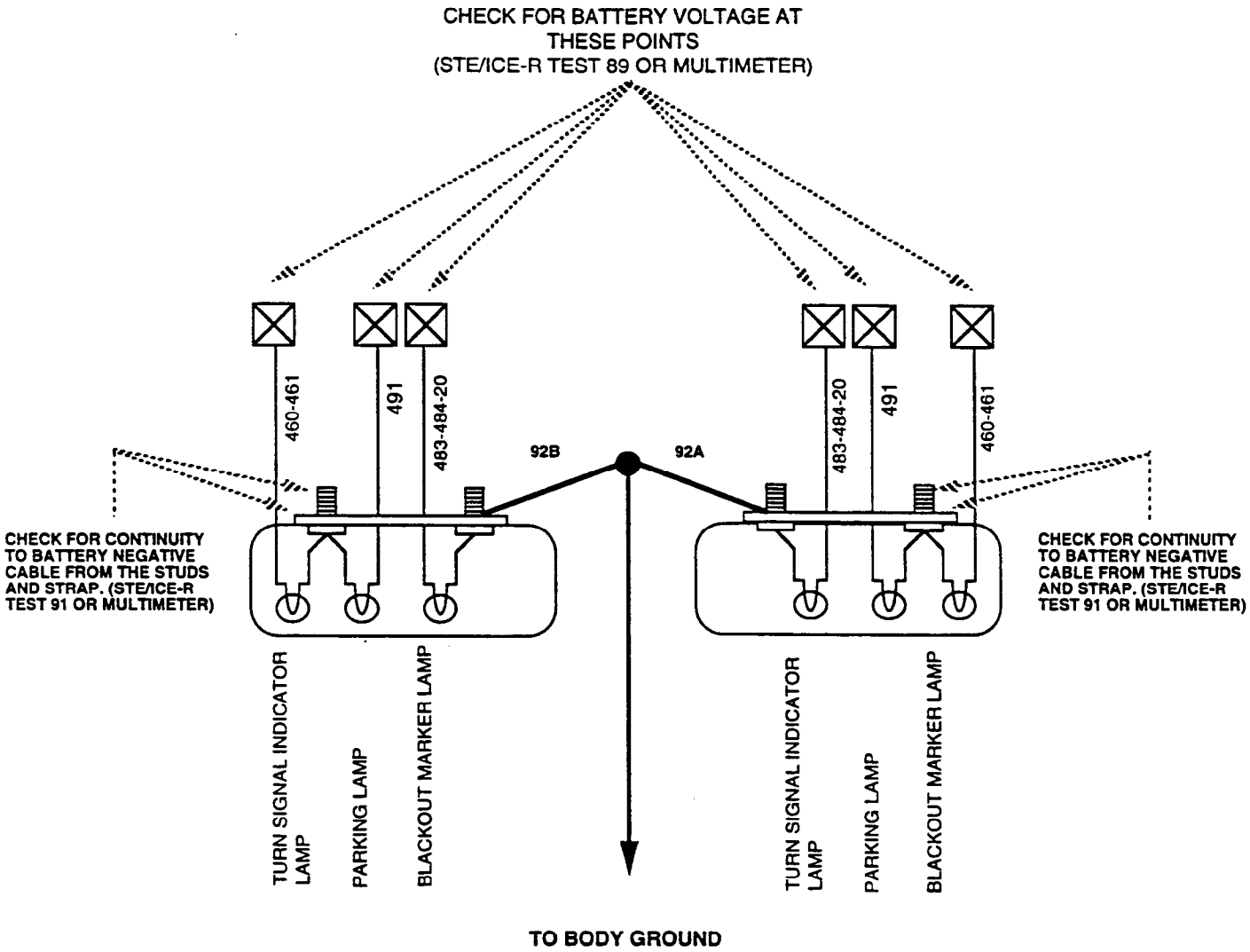

1. WHEN CHECKING FOR VOLTAGE, MAKE SURE THAT THE LAMP YOU ARE CHECKING IS SUPPOSED TO BE ON (CHECK THE LIGHTS SWITCH, TURN SIGNAL SWITCH, TRANSMISSION, ETC.).

CAUTION

Disconnect negative battery cable prior to making continuity measurements.

2. CHECK CONTINUITY TO BODY GROUND.

HEADLAMPS, BLACKOUT DRIVING LAMP, SIDE MARKERS

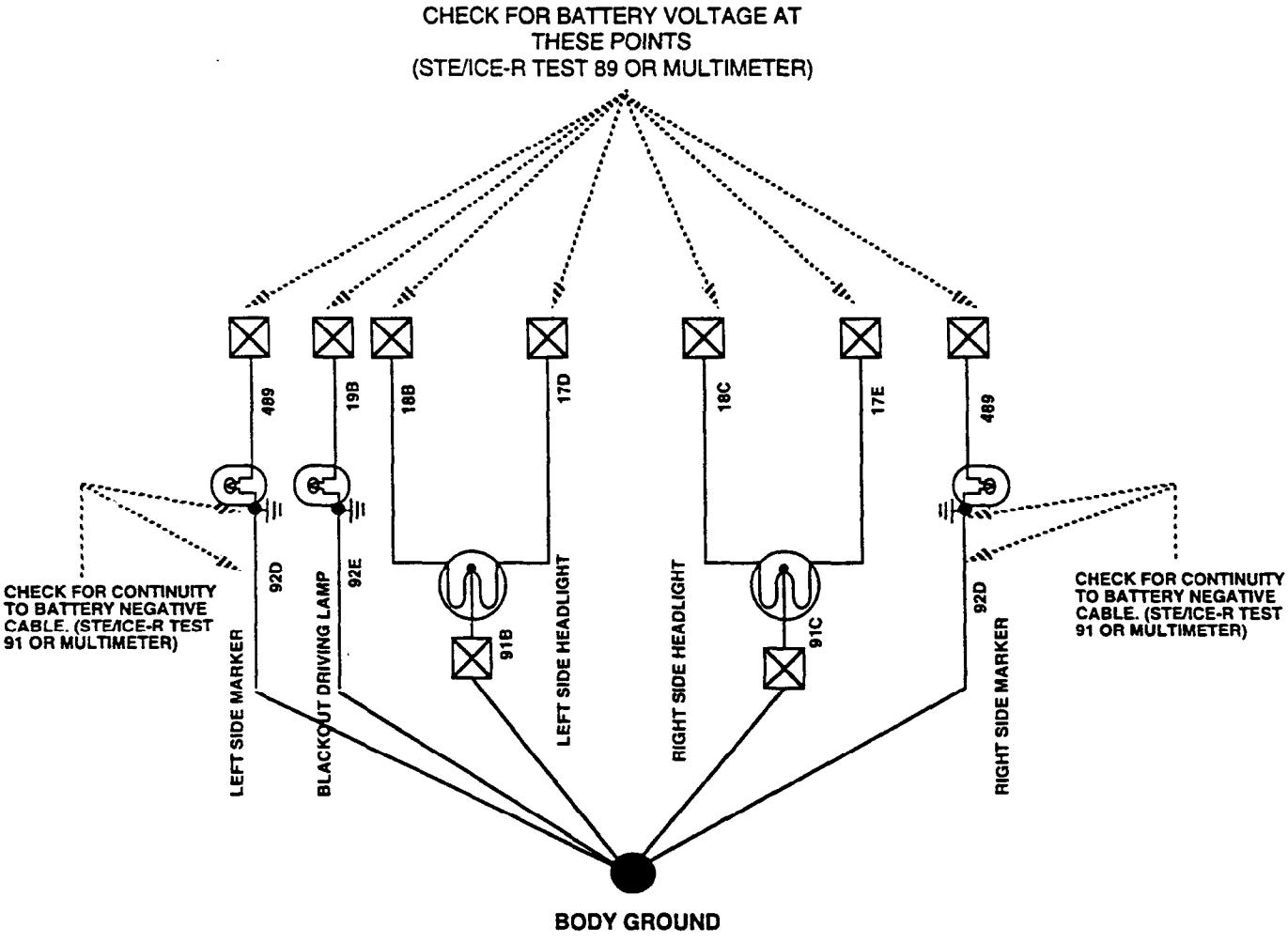

1. WHEN CHECKING FOR VOLTAGE, MAKE SURE THAT THE LAMP YOU ARE CHECKING IS SUPPOSED TO BE ON (CHECK THE LIGHTS SWITCH, TURN SIGNAL SWITCH, TRANSMISSION, ETC.).

CAUTION

Disconnect negative battery cable prior to making continuity measurements.

2. CHECK CONTINUITY TO BODY GROUND.

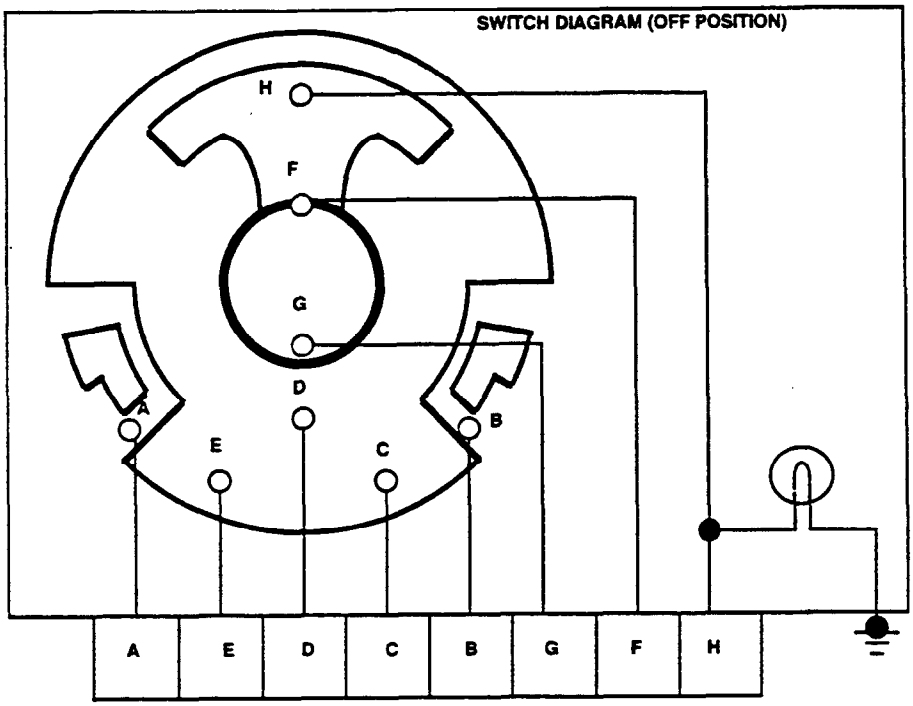

SUMMARY OF CONNECTIONS:

TERMINAL	CONNECTION	WIRE NUMBER
A	RIGHT FRONT TURN SIGNAL	460A
B	LEFT FRONT TURN SIGNAL	461A
C	LEFT REAR TURN SIGNAL/STOP LAMP	22-461A
D	LIGHT SWITCH TERMINAL C	22A
E	RIGHT REAR TURN SIGNAL	22-460A
F	HAZARD/TURN SIGNAL FLASHER TERM. B	325B
G	LIGHT SWITCH TERMINAL J (24 VOLTS)	467B
H	HAZARD/TURN SIGNAL FLASHER TERM. A	325A

CAUTION

Disconnect negative battery cable prior to making continuity measurements.

TURN SIGNAL SWITCH

1. WITH THE SWITCH IN THE LEFT POSITION, YOU SHOULD HAVE CONTINUITY FROM PIN H TO PINS B AND C, PIN D TO E, AND PIN F TO G.
2. WITH THE SWITCH IN THE RIGHT POSITION, YOU SHOULD HAVE CONTINUITY FROM PIN H TO PINS A AND E, PIN C TO D, AND PIN F TO G.

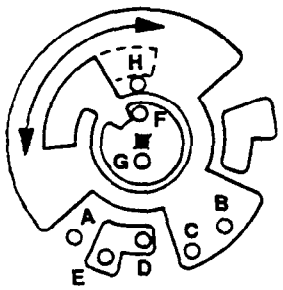

LEFT TURN

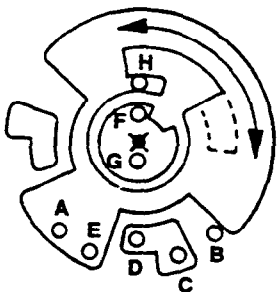

RIGHT TURN

NOTE

- **IF VEHICLE IS EQUIPPED WITH BRAKE LIGHT OVERRIDE DIRECTIONAL SIGNAL CONTROL ASSEMBLY (P/N12339312-1), REFER TO STEP 3.**
- **IF VEHICLE IS EQUIPPED WITH DIRECTIONAL SIGNAL CONTROL ASSEMBLY (P/N 12339312), REFER TO STEP 4.**

3. WITH SWITCH IN HAZARD POSITION, YOU SHOULD HAVE CONTINUITY FROM PIN H TO PINS A, B, C, D, AND E, AND PIN F TO G.
4. WITH SWITCH IN HAZARD POSITION, YOU SHOULD HAVE CONTINUITY FROM PIN H TO PINS A, B, C, AND E, AND PIN F TO G.

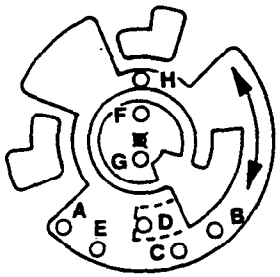

HAZARD

2-40. TRANSMISSION SYSTEM TESTS

NOTE

When checking fault codes, note that low battery voltage can cause false fault codes to be set in TCM.

The transmission system is equipped with a computer called the Transmission Control Module (TCM) (located left rear seat compartment) which interprets, analyzes and records electronic signals from sensors and switches located on the engine, brake pedal, and transmission. The recorded codes stored in the TCM are known as TROUBLE CODES which are retrieved using the diagnostic switch cable on the J2 connector of the TCM. The TCM can protect the transmission from damage by locking it in second gear, with maximum fluid pressure, until the problem has been corrected. The following procedures will detail diagnostic testing, troubleshooting, and corrective action for any existing faults. These transmission system tests may be run any time you think there is a transmission problem or if you were sent here by another test chain. This paragraph has a different kind of flow chart to guide you through testing because of the many problems that can occur. The most common problems are loose or corroded wiring connections. To troubleshoot the transmission, you will need a diagnostic switch cable (appendix B, item 81), digital multimeter (appendix B, item 155) and a throttle position (TP) sensor test cable (appendix B, item 80).

CAUTION

Do not disconnect battery without recording trouble codes. Failure to do so will result in loss of diagnostic test codes.

The Diagnostic Test Codes (DTC) are transmitted from the TCM to transmission lamp located next to the shift lever. When diagnostic switch cable is connected to the J2 connector, the system is placed in the diagnostic mode, which causes the transmission lamp to flash. The transmission lamp will flash once, pause, flash twice (meaning code 12), pause, flash once, pause, flash twice (code 12 again), and do this one more time for a total of three times, which means the system is operational.

NOTE

Diagnostic test code 63 will be set at all times.

For example, if the TCM is sending the trouble code 74, the lamp will flash 12 three times, flash 63 three times, which is set all the time and is to be disregarded, flash code 7 and 4, 7 and 4, 7 and 4 for code 74, and then 12, 12, 12, which ends the diagnostic check. These codes will repeat again if not taken out of diagnostic mode.

The TCM J1 connector will be used to diagnose and troubleshoot wiring, sensor connectors, pins, solenoids, and brake switch to ensure all external problems are checked and corrected prior to TCM and transmission faults.

On the following pages you will find diagrams and charts of the major portions of the transmission circuits. These are designed to help you isolate a problem and correct it.

TRANSMISSION SYSTEM

DIAGNOSTIC FLOWCHART

START

1

KNOWN INFO

NOTHING

POSSIBLE PROBLEMS

FLUID
SHIFTER
TP SENSOR
COOLING SYSTEM
TRANSMISSION

CHECK THE TRANSMISSION FLUID. IS IT OK ?

TEST OPTIONS

VISUAL - SEE NOTE AT RIGHT.

REASON FOR QUESTION

Transmission fluid level and appearance give a good indication of the system's condition.

NO → SEE NOTE AT RIGHT.

YES ↓

2

KNOWN INFO

FLUID OK

POSSIBLE PROBLEMS

SHIFTER
TP SENSOR
COOLING SYSTEM
TRANSMISSION

PERFORM THE ROAD TEST PROCEDURE AT RIGHT. DID THE VEHICLE PASS THE ROAD TEST?

TEST OPTIONS

SEE PROCEDURE AT RIGHT.

REASON FOR QUESTION

Road testing the transmission is the easiest way to check the system.

NO → GO TO A, Page 2-390

YES ↓

3

KNOWN INFO

FLUID OK
BANDS AND CLUTCHES OK
SHIFTER OK

POSSIBLE PROBLEMS

COOLING SYSTEM
TP SENSOR
TRANSMISSION

WITH THE VEHICLE COASTING IN 4TH GEAR, FLOOR THE ACCELERATOR. DOES THE TRANSMISSION DOWNSHIFT?

TEST OPTIONS

TRY IT (BE SURE NOT TO EXCEED ANY POSTED SPEED LIMITS).

REASON FOR QUESTION

You want to check out the TP sensor.

NO → GO TO B, Page 2-392

YES ↓

GO TO 4, Page 2-388

REFERENCE INFORMATION

TRANSMISSION SYSTEM

Procedure for checking transmission fluid

1. Start engine.
2. Hold down brake pedal and move transmission shift lever through all ranges including reverse. Leave the lever in each range for 2 seconds.
3. Engage parking brake and place shift lever in neutral. Check fluid level on dipstick.
4. Proper level is between FULL and ADD marks on dipstick.

NOTE

Check fluid for a burnt smell, grit, discoloration, air bubbles, or a milky appearance.

- Burnt smell, discoloration, or grit indicates worn or damaged internal components. Notify DS maintenance (chapter 14).
- Bubbles indicate an overfilled system or air leaks in the system. Drain the fluid and refill to proper level (para. 5-2).
- Milky appearance is due to water in the system. Change the fluid and filter (para. 5-2).
- Check fill tube for indications of fluid being blown out. If fluid is being blown out, check vent line for obstructions, and refill transmission to proper level (para. 5-2).

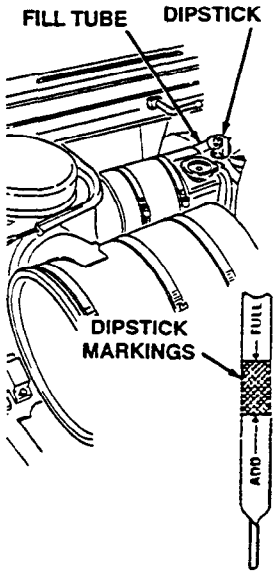

Road Test Procedure

1. Position shift lever in Ⓓ (overdrive) and accelerate vehicle from 0 mph. A 1-2, 2-3, and 3-4 shift should occur at all throttle openings. Allow vehicle to coast down to about 0 mph; 4-3, 3-2, and 2-1 shifts should occur.
2. Position transmission shift lever in D (drive) and accelerate vehicle from 0 mph. A 1-2 and 2-3 shift should occur at all throttle openings. Allow vehicle to coast down to about 0 mph; 3-2 and 2-1 shifts should occur.
3. Position transmission shift lever in 2 (low two) and accelerate vehicle from 0 mph. A 1-2 shift should occur at all throttle openings. No 2-3 shift can be obtained in this range. A 1-2 shift in 2 is somewhat firmer than in D. This is normal.
4. Position shift lever in 1 and accelerate the vehicle from 0 mph. No upshifts should occur in this range.
5. Position shift lever in Ⓓ, and with the vehicle speed at approximately 45 mph, close throttle and move lever to 3. Transmission should downshift to 3rd gear. An increase in engine rpm and engine braking effect should be noticed.
6. Position shift lever in Ⓓ, and with the vehicle speed at approximately 35 mph, close throttle and move lever to 2. Transmission should downshift to 2nd gear. An increase in engine rpm and engine braking effect should be noticed.
7. Position shift lever 2 and, with the vehicle speed at approximately 25 mph, close the throttle and move lever to 1. Transmission should downshift to 1st gear. An increase in engine rpm and engine braking effect should be noticed.
8. Position shift lever in R and check for reverse operation.
9. Hard shifting may be indicative of an underfilled or clogged system.

The TP sensor is used to shift the transmission to a lower gear under heavy acceleration.

TRANSMISSION SYSTEM

DIAGNOSTIC FLOWCHART

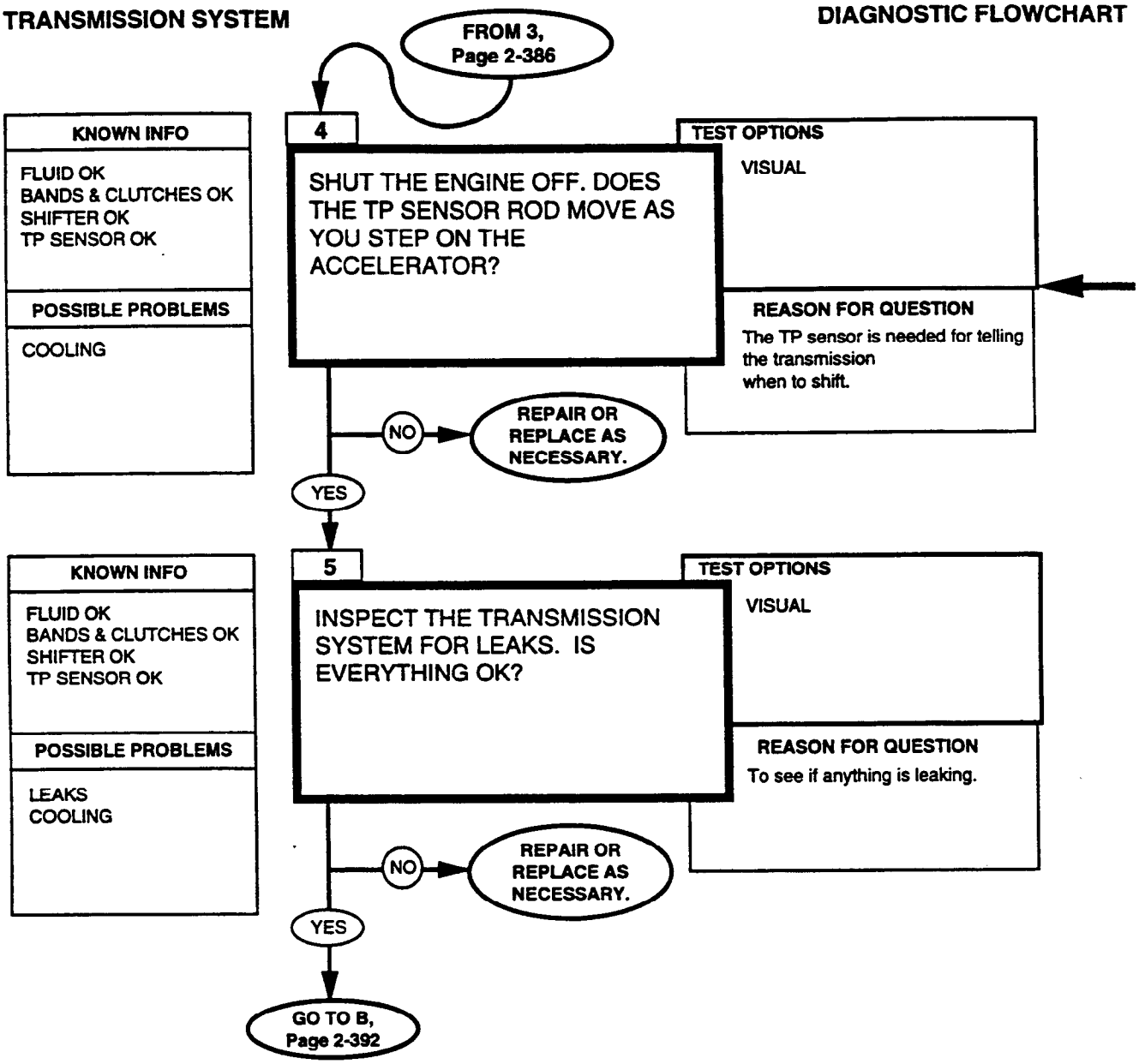

Repair or replace TP sensor (para. 4-46).

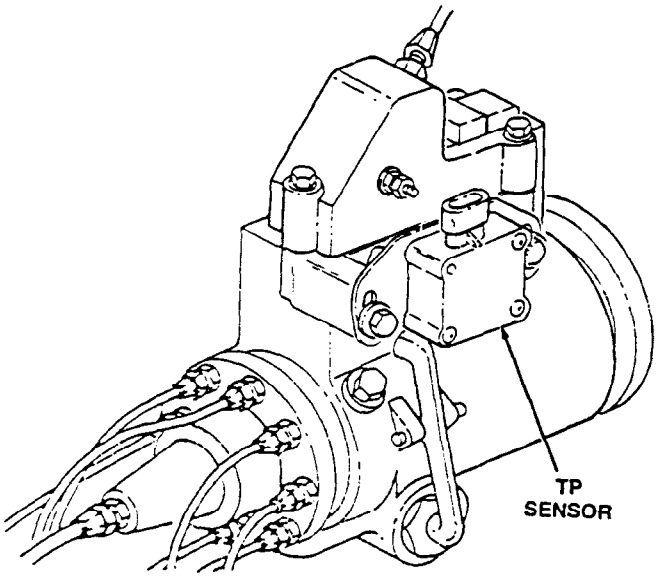

TRANSMISSION SYSTEM

DIAGNOSTIC FLOWCHART

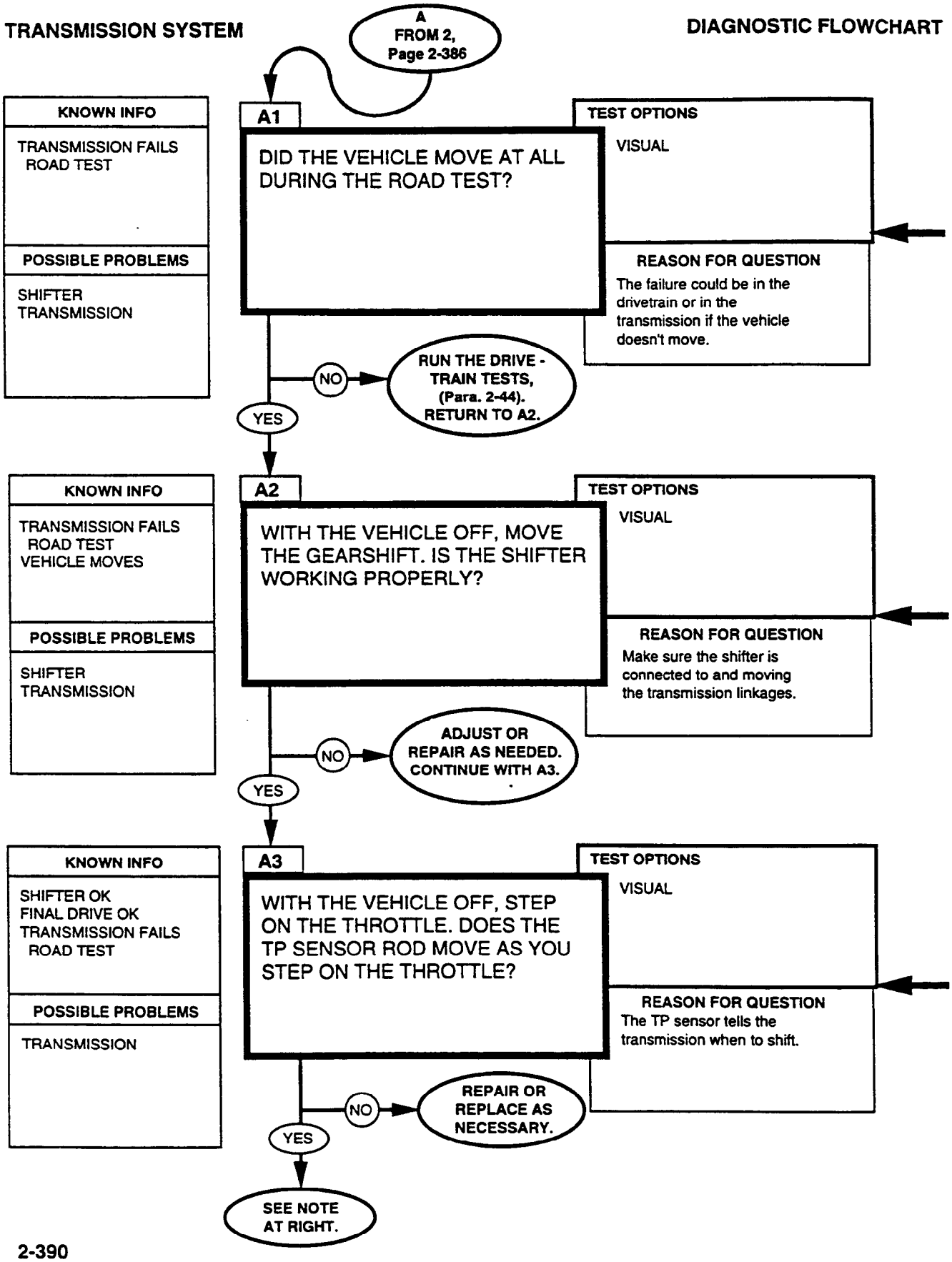

If the drivetrain system checks out OK, the problem is either the transmission itself, the shifter, or the modulator. The DRIVETRAIN tests are located in para. 2-43 of this manual.

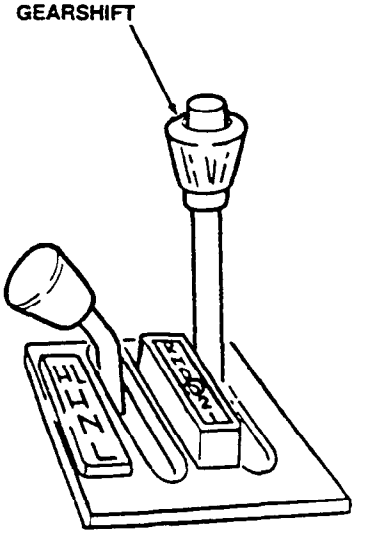

Make sure that the detents in the shifter correspond to the shift positions shown on the plate. Have an assistant move the shifter and look to see that the linkage is moving at the transmission.

Linkage repair and adjustment procedures are located in para. 5-9.

Look for a TP sensor problem if the vehicle was not shifting, or was not shifting as well as it should be.

Run the BRAKES and DRIVETRAIN tests in this manual. If you don't find any faults, notify DS maintenance (chapter 14).

TRANSMISSION SYSTEM

DIAGNOSTIC FLOWCHART

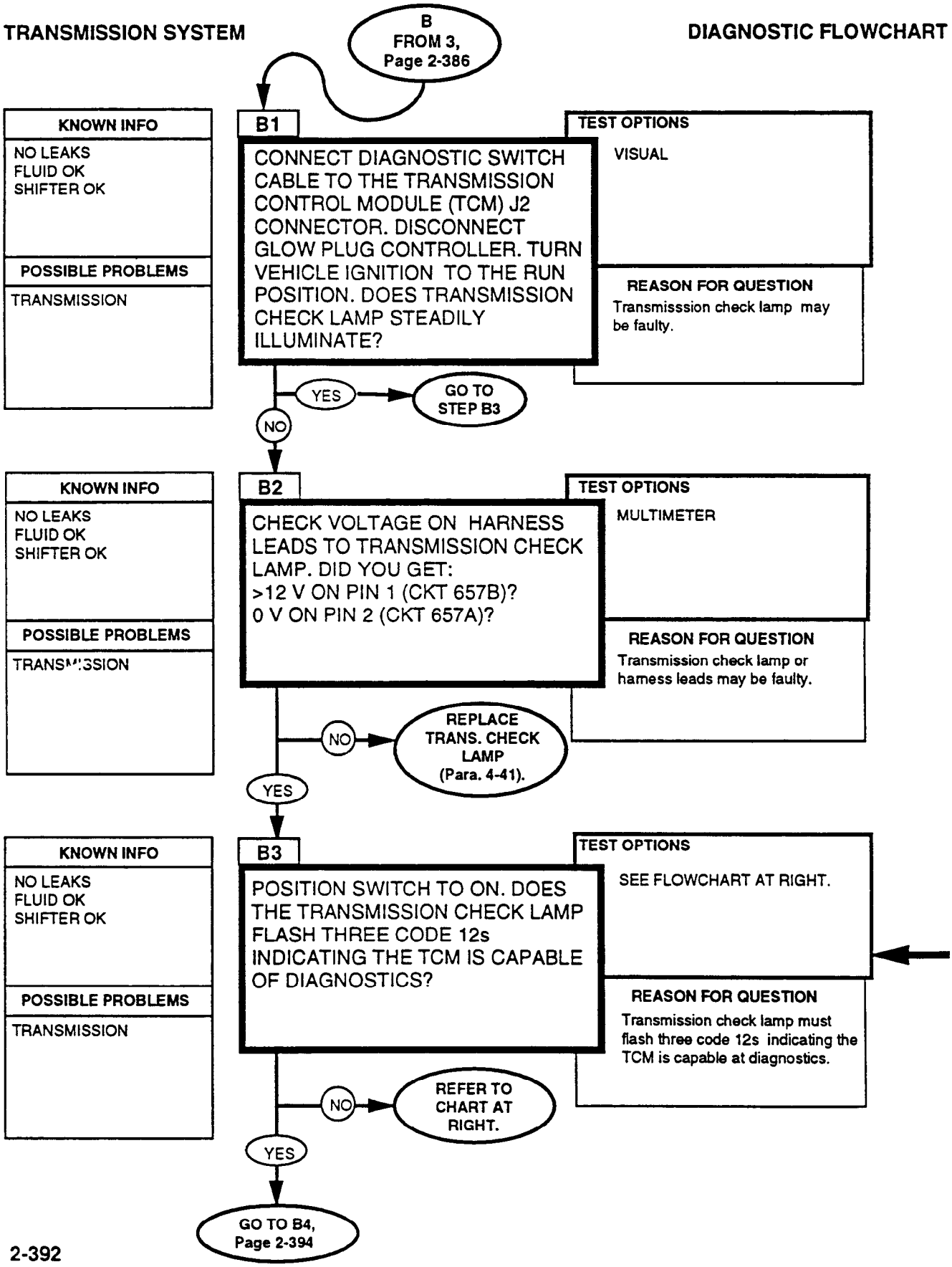

Will Not Display DTC Code 12, or Check Transmission ON Steady

(NOTE: TRANSMISSION CHECK LAMP IS THE LAMP NEXT TO THE SHIFT LEVER MARKED "TRANS-ONLY".)

IGNITION ON, ENGINE OFF, AND GLOW PLUG CONTROLLER DISCONNECTED (PARA. 4-33).

REMOVE DIAGNOSTIC SWITCH CABLE. INSTALL JUMPER CABLE BETWEEN PINS A AND E of J2 ON TCM ASS'Y.

NO DTC 12

DTC 12 FLASHES

CHECK DIAGNOSTIC CABLE FOR OPEN AND REPAIR.

READ CODES AND REMOVE JUMPER.

- IGNITION OFF.
- DISCONNECT TCM CONNECTOR.
- IGNITION ON.

TRANS CHECK LAMP OFF

TRANS CHECK LAMP ON

REPAIR SHORT TO GROUND IN CKT 657A (PARA. 4-80).

- IGNITION OFF.
- DIAGNOSTIC TERMINAL NOT GROUNDED.
- RECONNECT TCM CONNECTOR.
- IGNITION ON AND ENGINE OFF.
- CONNECT PROBE PIN E ON J2 TO GROUND.

NO DTC 12

DTC 12 FLASHES

REPLACE DEFECTIVE TCM (PARA 4-45).

OPEN CKT PIN A J2. REPLACE TCM (PARA 4-45).

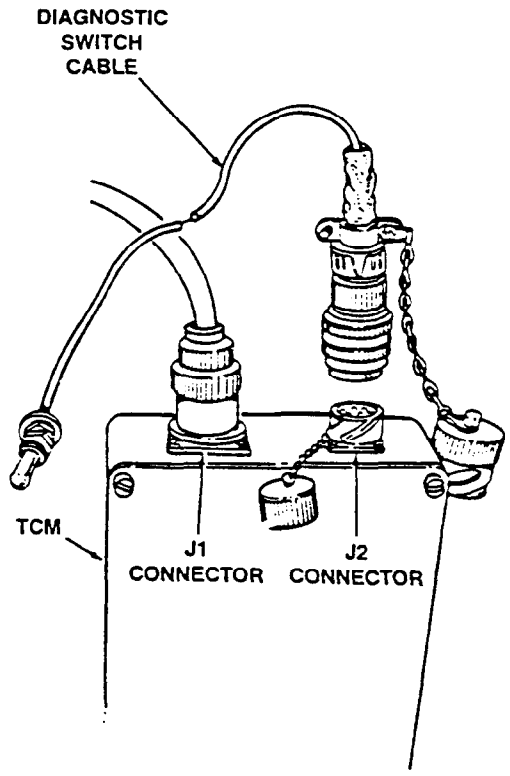

NOTE: AFTER TROUBLESHOOTING, RECONNECT GLOW PLUG CONTROLLER. VEHICLE WILL HAVE TO BE OPERATED IN ORDER FOR TCM TO RECEIVE TROUBLE CODES. AFTER REPAIRS, CHECK TRANS LAMP OPERATION.

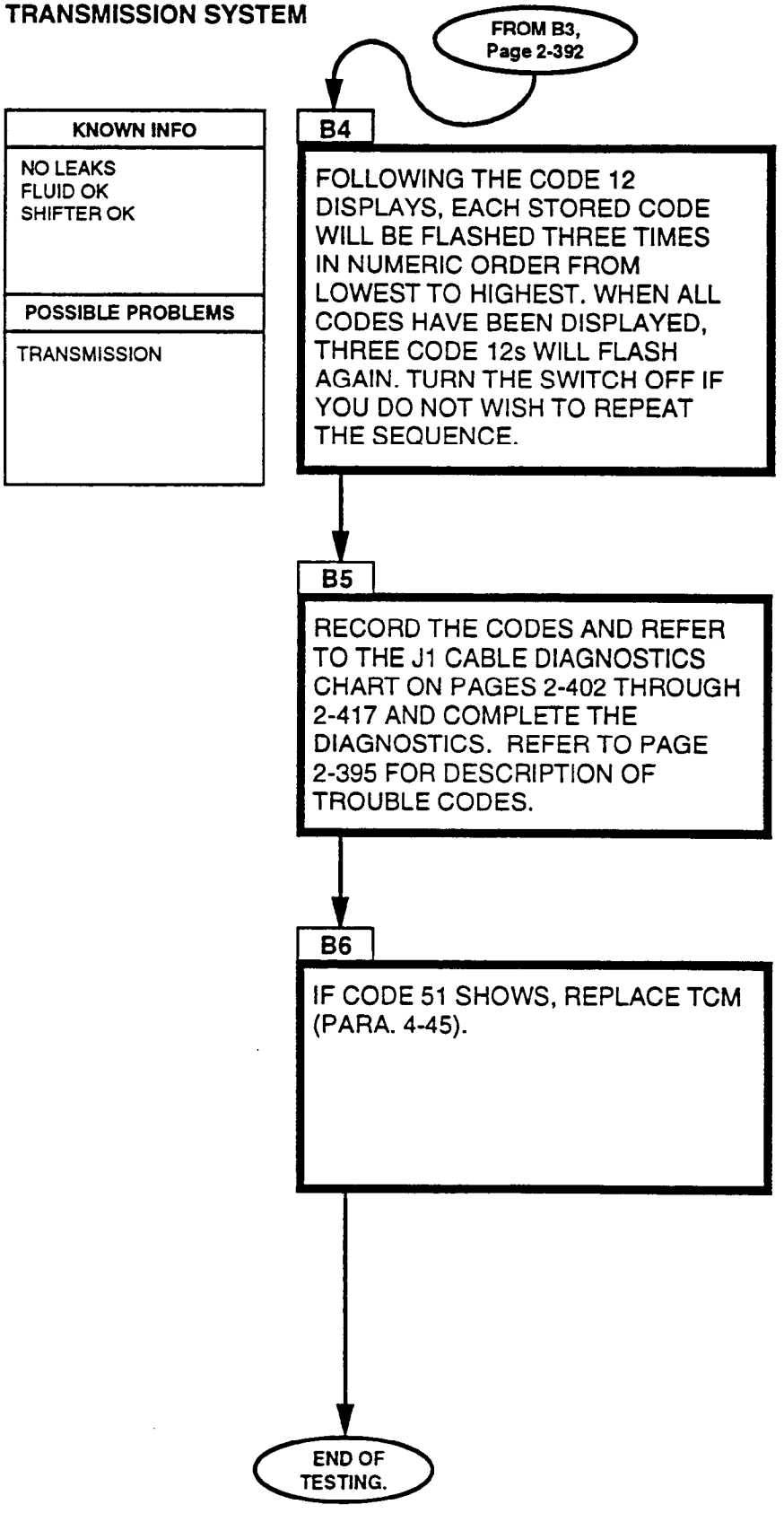
FROM B3, Page 2-392
KNOWN INFO
NO LEAKS
FLUID OK
SHIFTER OK
POSSIBLE PROBLEMS
TRANSMISSION
B4
FOLLOWING THE CODE 12 DISPLAYS, EACH STORED CODE WILL BE FLASHED THREE TIMES IN NUMERIC ORDER FROM LOWEST TO HIGHEST. WHEN ALL CODES HAVE BEEN DISPLAYED, THREE CODE 12s WILL FLASH AGAIN. TURN THE SWITCH OFF IF YOU DO NOT WISH TO REPEAT THE SEQUENCE.
B5
RECORD THE CODES AND REFER TO THE J1 CABLE DIAGNOSTICS CHART ON PAGES 2-402 THROUGH 2-417 AND COMPLETE THE DIAGNOSTICS. REFER TO PAGE 2-395 FOR DESCRIPTION OF TROUBLE CODES.
B6
IF CODE 51 SHOWS, REPLACE TCM (PARA. 4-45).
END OF TESTING.

The following chart will help you find the code you need. The J1 cable diagnostics checks (page 2-402) must be performed. Always correct the lower code number first. If code 51 shows up, replace TCM (para. 4-45), operate vehicle, and recheck for trouble codes.

TROUBLE CODE	CIRCUIT	PAGE NO.
21	Throttle Position (TP) High	2-396
22	Throttle Position (TP) Low	2-396
24	Transmission Output Speed Sensor (TOSS)	2-396
28	Transmission Range Pressure (TR) Switch	2-396
37	Torque Converter Clutch (TCC) Brake Switch Stuck ON	2-396
38	TCC Brake Switch Stuck OFF	2-396
39	TCC Stuck OFF	2-397
51	Transmission Control Module (TCM)	2-397
52	System Voltage High Long	2-397
53	System Voltage High	2-397
58	Transmission Temperature High	2-397
59	Transmission Temperature Low	2-398
68	Transmission Component Slipping	2-398
69	Torque Converter Clutch (TCC) Stuck ON	2-398
71	Engine Speed Sensor Circuit Low	2-398
73	Pressure Control Solenoid (PCS) Current	2-399
74	Transmission Input Speed Sensor (TISS) Circuit	2-399
75	System Voltage Low	2-399
79	Transmission Fluid Overtemp	2-399
81	2-3 Shift Solenoid Circuit Fault	2-400
82	1-2 Shift Solenoid Circuit Fault	2-400
83	TCC Solenoid (PWM) Circuit Fault	2-400
85	Undefined Ratio Error	2-401
86	Low Ratio Error	2-401
87	High Ratio Error	2-401

DTC 21/22
Throttle Position (TP) Sensor Circuit High/ Throttle Position Sensor Circuit Low

Circuit Description:

The TP sensor contains a resistor strip with one end connected to a 5-volt supply and the other to ground. The signal is connected to a movable contact within the TP sensor. As the accelerator pedal is applied and the throttle shaft rotates, the voltage signal will increase from approximately 0.5 to 4.5 volts.

DTC 21 Will Set When:

- Engine is operating.
- TP sensor signal voltage is greater than 4.9 volts.
- Conditions are met for 1 second.

DTC 22 Will Set When:

- Engine is operating.
- TP sensor signal voltage is less than 0.2 volt.
- Conditions are met for 1 second.

DTC 24
Output Speed Sensor Signal

Circuit Description:

The output speed sensor is a magnetic induction-type sensor. Gear teeth pressed onto the output shaft induce an alternating voltage into the sensor.

DTC 24 Will Set When:

- Not in P/N.
- Circuit voltage is constant.
- Engine speed is greater than 3,000 rpm.
- Output speed is less than 200 rpm.
- TP is between 10% and 100%.
- All conditions are met for 3 seconds.

DTC 28
Transmission Range (TR) Pressure Switch Assembly (PSA) Fault

Circuit Description:

The Transmission Range (TR) Pressure Switch Assembly consists of five normally open pressure switches mounted on the valve body. The TCM supplies battery voltage to each range signal. By grounding one or more of these circuits through various combinations of the pressure switches, the TCM assembly detects what transmission range has been selected by the vehicle operator. When the transmission electrical connector is disconnected, the ground potential for the three range signals to the TCM will be removed and D2 gear will be indicated.

DTC 28 Will Set When:

- Range signals A and C are both zero volt.
- Condition is met for 2 seconds.

DTC 37/38
Torque Converter Clutch (TCC) Brake Switch Stuck ON/ TCC Brake Switch Stuck OFF

Circuit Description:

The normally closed brake switch supplies a B+ signal volt when the TCC brake switch is closed (brake pedal not applied).

DTC 37 Will Set When:

Circuit 810B is open.

- Then vehicle speed is between 5 mph (8 kph) and 20 mph (32 kph) for greater than 6 seconds.
- Then vehicle speed is greater than 20 mph (32 kph) for greater than 6 seconds.
- For a complete total of 7 times.

DTC 38 Will Set When:

TCC brake switch feed CKT 810B has constant voltage.

- Vehicle speed is greater than 20 mph (32 kph) for greater than 6 seconds.
- Then vehicle speed is between 5 mph (8 kph) and 20 mph (32 kph) for greater than 6 seconds.
- For a complete total of 7 times.

DTC 39
TCC Stuck OFF

Circuit Description:

The TCM commands the TCC PWM solenoid ON by modulating TCC signal fluid acting on the converter clutch shift valve. Then TCC fluid applies the torque converter clutch.

DTC 39 Will Set When:

- TCC is commanded ON.
- TCC slip speed greater than 65 rpm.
- Trans range in D3 or D4.
- 2nd or 3rd gear.
- All conditions are met for 2 seconds.

DTC 51
Transmission Control Module (TCM) Faulty or Incorrect

Circuit description:

The Transmission Control Module (TCM), an on-board computer, receives and processes input signals from sensors on the vehicle and delivers output signals to the solenoids located on the control valve assembly. These solenoids control the transmission operating pressures, upshift and downshift patterns and Torque Converter Clutch (TCC) operation.

DTC 51 Will Set When:

- There is an uncorrectable computational error, or an input is in error intermittently.

DTC 52/53
System Voltage High Long/ System Voltage High

Circuit Description:

Ignition voltage is supplied to the control module to indicate the status of the ignition switch. Battery voltage is supplied to the control module to, in part, maintain memory of learned functions and parameters.

DTC 52 Will Set When:

- The ignition is ON and the system voltage is greater than 16 volts.
- Condition is met for 109 minutes.

DTC 53 Will Set When:

- The ignition is ON and the system voltage is greater than 19.5 volts.
- Condition is met for 2 minutes.

DTC 58
Transmission Fluid Temperature (TFT) Sensor Circuit Low (High Temperature Indicated)

Circuit Description:

The TFT sensor is a thermistor that controls the signal voltage to the TCM. The TCM supplies a 5-volt reference signal to the sensor on TWC pin L. When the transmission fluid is cold, the sensor resistance is high and the TCM will sense high signal voltage.

As the transmission fluid temperature warms to normal transmission operating temperature 212°F (100°C), the sensor resistance becomes less and the voltage decreases to approximately 1.5 to 2.0 volts. With DTC 79 also set, check the transmission cooling system.

DTC 58 Will Set When:

- Signal voltage indicates TFT greater than 304°F (151°C).
- Condition is met for 1 second.

DTC 59
Transmission Fluid Temperature (TFT) Sensor Circuit High (Low Temperature Indicated)

Circuit Description:

The TFT sensor is a thermistor that controls the signal voltage to the TCM. The TCM supplies a 5-volt reference signal to the sensor on TWC pin L. When the transmission fluid is cold, the sensor resistance is high and the TCM will sense high signal voltage.

As the transmission fluid temperature warms to normal transmission operating temperature 212°F (100°C), the sensor resistance becomes less and the voltage decreases to approximately 1.5 to 2.0 volts.

DTC 59 Will Set When:

- Signal voltage indicates TFT less than -34°F (-37°C).
- Condition is met for 1 second.

DTC 68
Transmission Component Slipping

Circuit Description:

The TCM monitors the difference in engine speed and input speed.

DTC 68 Will Set When:

- TCC slip speed is greater than 200 rpm.
- Fourth gear is indicated.
- TCC is locked.
- Not in park/neutral.
- All conditions are met for 2 seconds.
- Transmission range switch indicates D3 or D4.
- Commanded gear indicates 2nd or 3rd gear.
- All conditions are met for 2 seconds.

DTC 69
Torque Converter Clutch (TCC) Stuck ON

Circuit Description:

The TCM commands the TCC PWM solenoid ON by modulating TCC signal fluid acting on the converter clutch shift valve. Then TCC fluid applies the torque converter clutch.

DTC 69 Will Set When:

- TCC slip speed rpm indicates between -5 and +10 rpm.
- TCC solenoid is commanded OFF.
- TP sensor signal is greater than 25%.

DTC 71
Engine Speed Sensor Circuit Low

Circuit Description:

The Camshaft Position Sensor (CPS) detects the rotational speed of the camshaft. As the camshaft rotates, an AC signal is generated in the circuit. This signal provides the input to determine engine speed for use in various calculations including TCC slip speed and overdrive ratio.

DTC 71 Will Set When:

- Engine speed is less than 50 rpm.
- Transmission range indicates R, D4, D3, or D1.
- Conditions are met for 2 seconds.

DTC 73
Pressure Control Solenoid (PCS) Circuit Current Error (Force Motor Circuit)

Circuit Description:

The Pressure Control Solenoid (PCS) is a TCM-controlled device used to regulate transmission line pressure. The TCM compares TP voltage, engine rpm, and other inputs to determine the appropriate line pressure of a given load. The TCM will regulate the pressure by applying a varying amperage to the PCS. The applied amperage can vary from 0.1 to 1.1 amp. The TCM then monitors the amperage at the return line.

DTC 73 Will Set When:

- The return amperage varies greater than 0.16 amp from the commanded amperage.
- All conditions are met for 1 second.

DTC 74
Transmission Input Speed Sensor (TISS) Circuit

Circuit Description:

The Transmission Input Speed Sensor (TISS) consists of a permanent magnet surrounded by a coil of wire. As the forward clutch housing rotates, an AC voltage is induced in the circuit. The signal voltage and frequency vary directly with the forward clutch rotational speed.

DTC 74 Will Set When:

- Transmission range is not in park or neutral.
- Engine speed is greater than 300 rpm.
- Transmission output speed is greater than 200 rpm.
- Transmission input speed less than 50 rpm.
- All conditions are met for 2 seconds.

DTC 75
System Voltage Low

Circuit Description:

Ignition voltage is supplied to the control module to indicate the status of the ignition switch. Battery voltage is supplied to the control module to, in part, maintain memory of learned functions and parameters.

DTC 75 Will Set When:

- The ignition is ON.
- Ignition feed voltage to the control module is less than the graduated scale of:
  - -40°F (-40°C) = 7.3 volts.
  - 194°F (-90°C) = 10.3 volts.
  - 302°F (-150°C) = 11.7 volts.
- Engine speed is greater than 1,000 rpm.
- All conditions are met for 4 seconds.

DTC 79
Transmission Fluid Overtemp

Circuit Description:

The Transmission Fluid Temperature (TFT) sensor is a thermistor that controls the signal voltage to the TCM. The TCM supplies a 5-volt reference signal to the sensor on Circuit 923A. When the transmission fluid is cold, the sensor resistance is high and the TCM will sense high signal voltage.

As the transmission fluid temperature warms to normal transmission operating temperature 212°F (100°C), the sensor resistance becomes less and the voltage decreases to approximately 1.5 to 2.0 volts.

DTC 79 Will Set When:

- Transmission fluid temperature is greater than 295°F (146°C).
- All conditions are met for 30 minutes.

DTC 81
2-3 Shift Solenoid Circuit Fault

Circuit Description:

Ignition voltage is supplied directly to the 2-3 shift solenoid. The TCM controls the solenoid by providing the ground path through Circuit 315A to TCM.

DTC 81 Will Set When:

- The TCM commands the solenoid ON and voltage remains high.
- The TCM commands the solenoid OFF and voltage remains low.
- All conditions are met for 2 seconds.

DTC 82
1-2 Shift Solenoid Circuit Fault

Circuit Description:

Ignition voltage is supplied directly to the 1-2 shift solenoid. The TCM controls the solenoid by providing the ground path through Circuit 237A to TCM.

DTC 82 Will Set When:

- The TCM commands the solenoid ON and voltage remains high.
- The TCM commands the solenoid OFF and voltage remains low.
- All conditions are met for 2 seconds.

DTC 83
TCC Solenoid (PWM) Circuit Fault

Circuit Description:

The control module supplies a ground through an internal Quad-Driver Module (QDM), allowing current to flow through the solenoid coil according to the duty cycle (percentage of ON and OFF time). This current flow through the solenoid coil creates a magnetic field that magnetizes the solenoid core. The magnetized core attracts the checkball to seat against spring pressure. This blocks the exhaust for the TCC signal fluid and allows 2-3 drive fluid to feed the TCC signal circuit. The TCC signal fluid pressure acts on the TCC regulator valve to regulate line pressure and to apply fluid pressure to the TCC shift valve. When the TCC shift valve is in the apply position, regulated applied fluid pressure is directed through the TCC valve to apply the torque converter clutch.

DTC 83 Will Set When:

- The TCM commands the solenoid ON and voltage remains high.
- The TCM commands the solenoid OFF and voltage remains low.
- All conditions are met for 2 seconds.

DTC 85
Undefined Ratio Error

Circuit Description:

The control module calculates ratio based on the transmission input speed and output speed sensor reading. The control module compares the known transmission ratio to the calculated ratio for the particular gear range selected.

DTC 85 Will Set When:

- Throttle position is greater than 25%.
- Not in park, neutral, or 4th gear.
- Engine speed is greater than 300 rpm.
- Vehicle speed is greater than 7 mph (11 kph).

COMMANDED GEAR	IF CALCULATED RATIO IS:	
	LESS THAN	MORE THAN
1st	2.38	2.63
2nd	1.43	1.58
3rd	0.95	1.05
REV	1.97	2.17

- All conditions are met for 2 seconds.

DTC 86
Low Ratio Error

Circuit Description:

The control module calculates ratio based on the TISS and TOSS readings. The control module compares the known transmission ratio to the calculated ratio for the particular gear range selected.

DTC 86 Will Set When:

- Not in park, reverse, or neutral.
- Engine speed is greater than 300 rpm.
- Throttle position is greater than 25%.
- Vehicle speed is greater than 7 mph (11 kph).
- Transmission gear ratio is less than 1.06 in 1st or 2nd gear.
- All conditions are met for 2 seconds.

DTC 87
High Ratio Error

Circuit Description:

The control module calculates ratio based on the TISS and TOSS readings. The control module compares the known transmission ratio to the calculated ratio for the particular gear range selected.

DTC 87 Will Set When:

- Throttle position is greater than 25%.
- Not in park, reverse, or neutral.
- Engine speed greater than 300 rpm.
- Vehicle speed is greater than 7 mph (11 kph).
- Transmission temperature is greater than 68°F (20°C).
- All conditions are met for 2 seconds.

NOTE

- The following diagnostics will help isolate and repair problem circuits, wires, pins, connectors, sensors, circuit breakers, and solenoids.
- For repair of all wiring, refer to para. 4-80.
- Check connector pins before inserting probes.

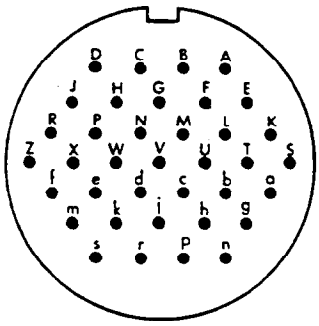

J1

J1 CABLE DIAGNOSTICS CHART

J1 Voltage Measurements With Ignition ON, Engine OFF, and Glow Plug Controller Disconnected. Refer to Para. 4-33.

CKT NOM.	CKT #	PIN	TO	PIN	EXP READ	
IGN PWR	291D	j		a or b	12VDC	No — Go to pg 2-404
Battery Pos	537D	Z		a or b	12VDC	No — Go to pg 2-405
Trans Lp	657A	U*		a or b	LED Lights	No — Go to pg 2-406
Brake Sw	810B	W		a or b	12V (Brake OFF)	No — Go to pg 2-407
Brake Sw	810B	W		a or b	O (Brake ON)	No — Go to pg 2-407

* Jumper wire from U to a or b.

Reconnect Glow Plug Controller. Refer to Para. 4-33. J1 Voltage Measurement With Ignition ON, Engine ON, Transmission in PARK.

CKT NOM.	CKT #	PIN	TO	PIN	EXP READ	
Engine rpm	349A	h		c or p	0.3 volt min @ idle	Go to pg 2-408
Press SW A	765A	A		a or b	Open wire	No — Go to pg 2-416
Press SW B	763A	B		a or b	0 TO 1 ohm	No — Go to pg 2-416
Press SW C	764A	C		a or b	Open wire	No — Go to pg 2-416

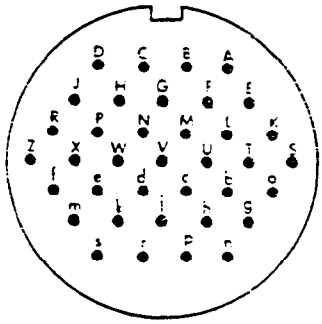

NOTE

Check connector pins before inserting probes.

J1 CABLE DIAGNOSTICS CHART (Cont'd)

J1 Resistance Measurements With Ignition OFF

CKT NOM.	CKT #	PIN	TO PIN	EXP READ	
Battery Neg	599A	a	Shunt	O ohm	No — Go to pg 2-405
Battery Neg	599B	b	Shunt	O ohm	No — Go to pg 2-405
TPS	355A	s	c or p	~ 1 to 2 Kohms	No — Go to pg 2-409
TPS	350A	d	c or p	4 to 6 Kohms	No — Go to pg 2-409
TISS	495A 496A	m	n	1 to 2 Kohms	No — Go to pg 2-410
TOSS	497A 498A	S	R	1 to 2 Kohms	No — Go to pg 2-411
TCC SOL	924A	X	j	~ 8-12 ohms	No — Go to pg 2-412
SHIFT SOL A	237A	E	j	~18 to 24 ohms	No — Go to pg 2-413
SHIFT SOL B	375A	D	j	~18 to 24 ohms	No — Go to pg 2-414
FORCE MTR	264A 265A	g	k	3.5 to 5.2 ohms	No — Go to pg 2-415
Trans Temp Sensor	923A	e	c or p	40 ohm to 5 Kohm (High Temp. → Low Resist.)	No — Go to pg 2-417

Upon completion of J1 cable diagnostics, operate the vehicle and recheck for codes to ensure codes have cleared. If codes have not cleared, refer to DS maintenance (chapter 14).

TRANSMISSION SYSTEM **DIAGNOSTIC FLOWCHART**

IGNITION POWER

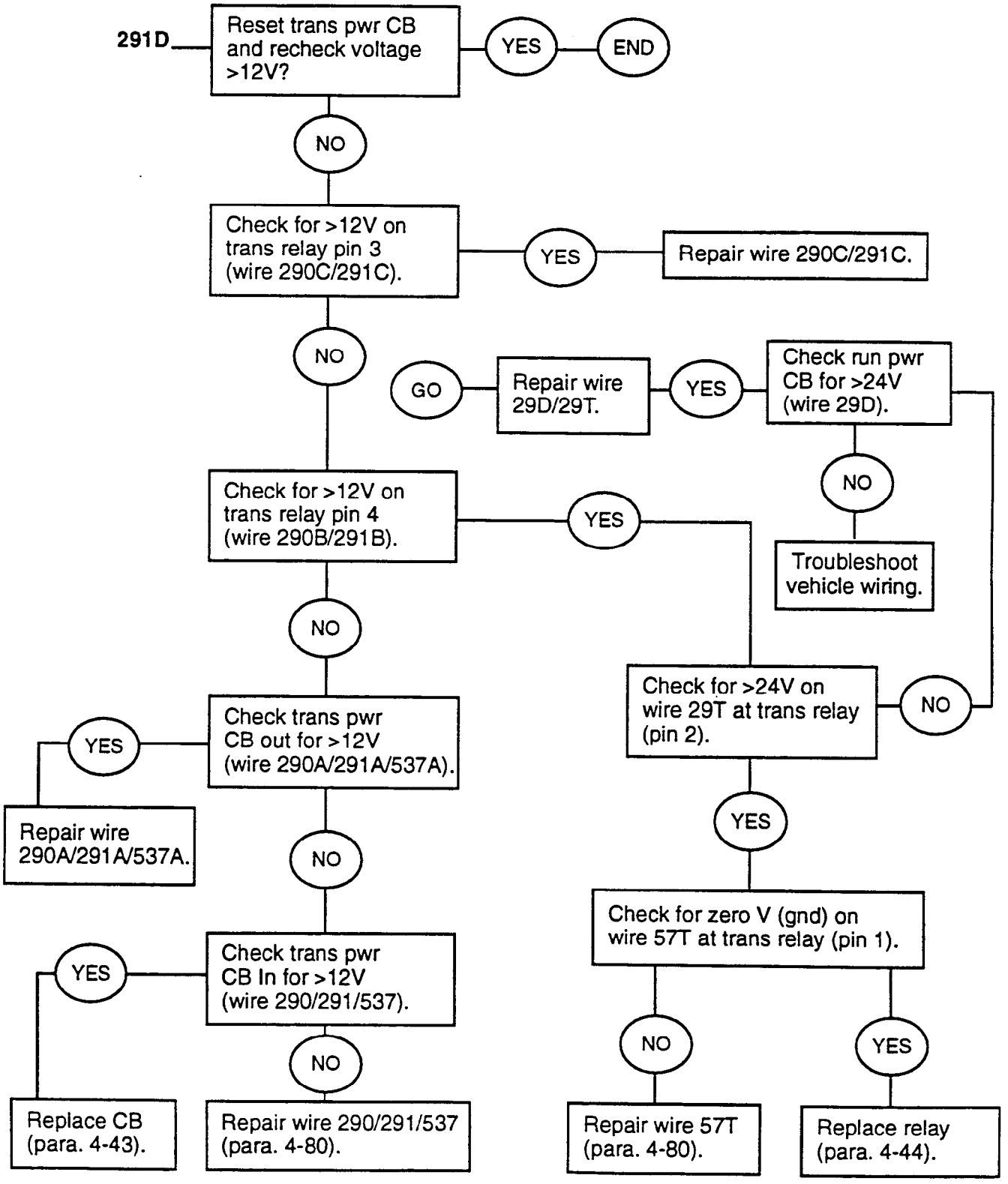

DIAGNOSTIC FLOWCHART **TRANSMISSION SYSTEM**

BATTERY CIRCUIT

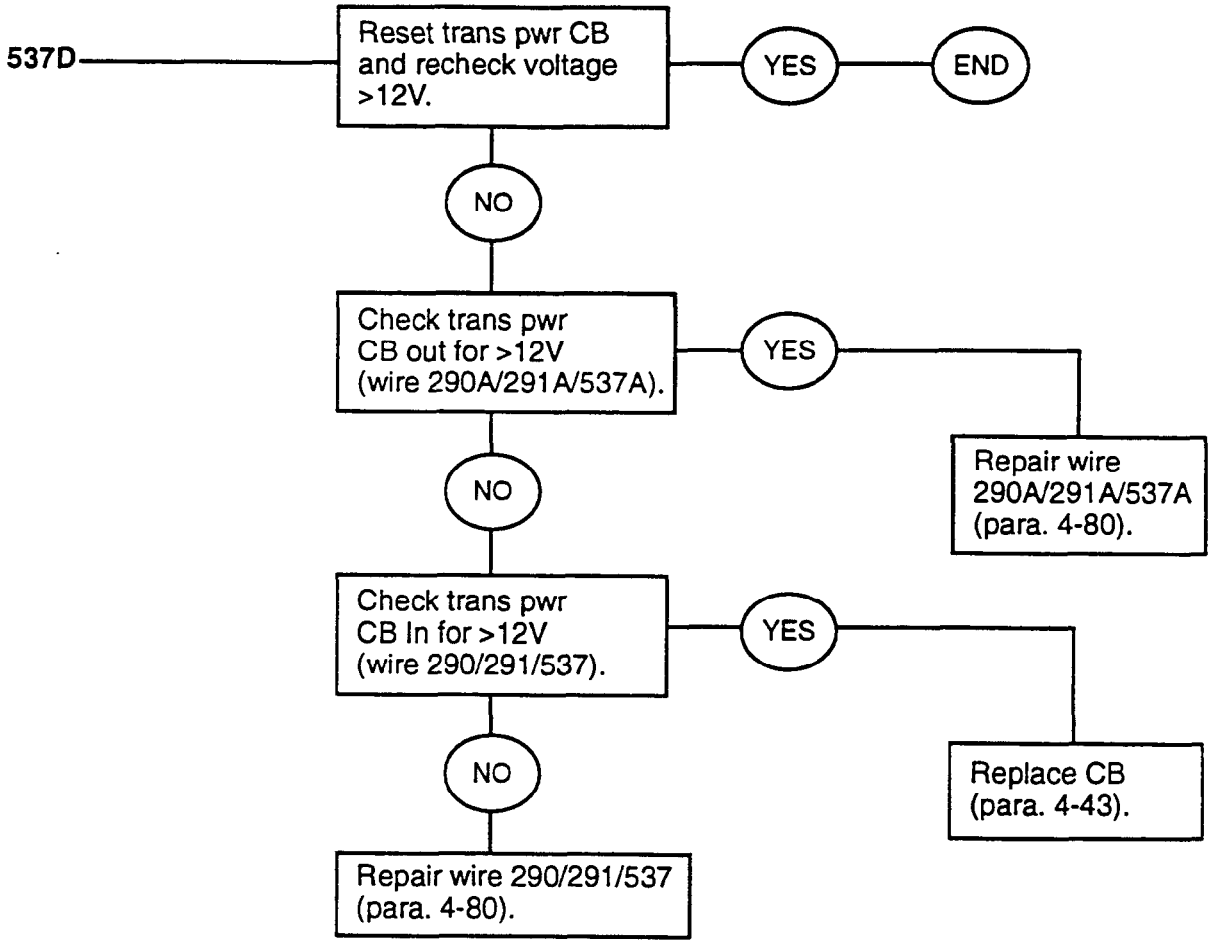

VEHICLE GROUND CIRCUIT

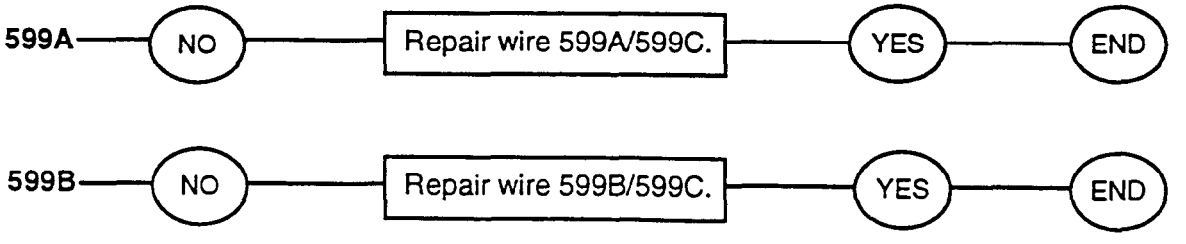

TRANSMISSION SYSTEM **DIAGNOSTIC FLOWCHART**

TRANSMISSION LIGHT CIRCUIT

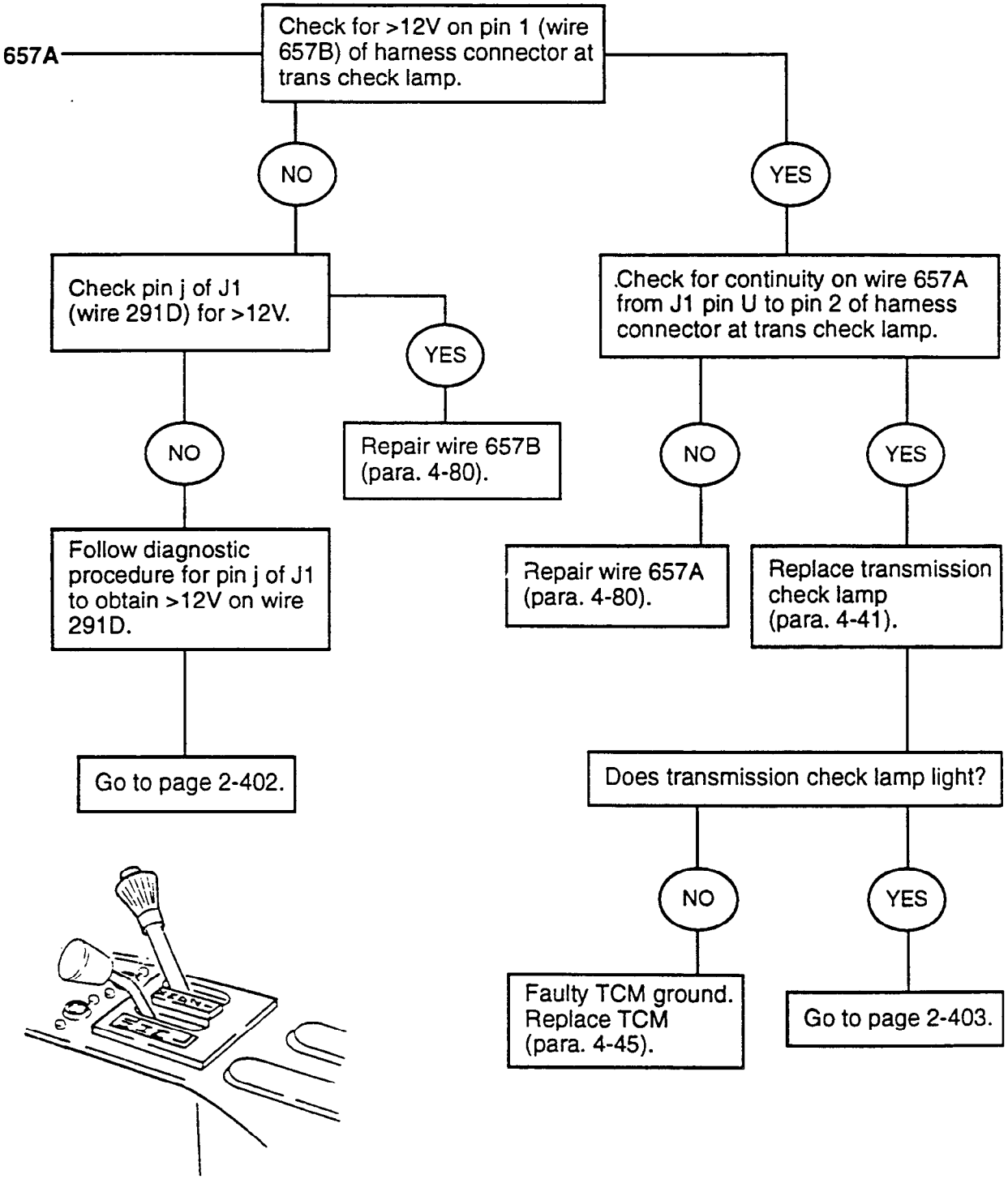

DIAGNOSTIC FLOWCHART **TRANSMISSION SYSTEM**

BRAKE SWITCH CIRCUIT

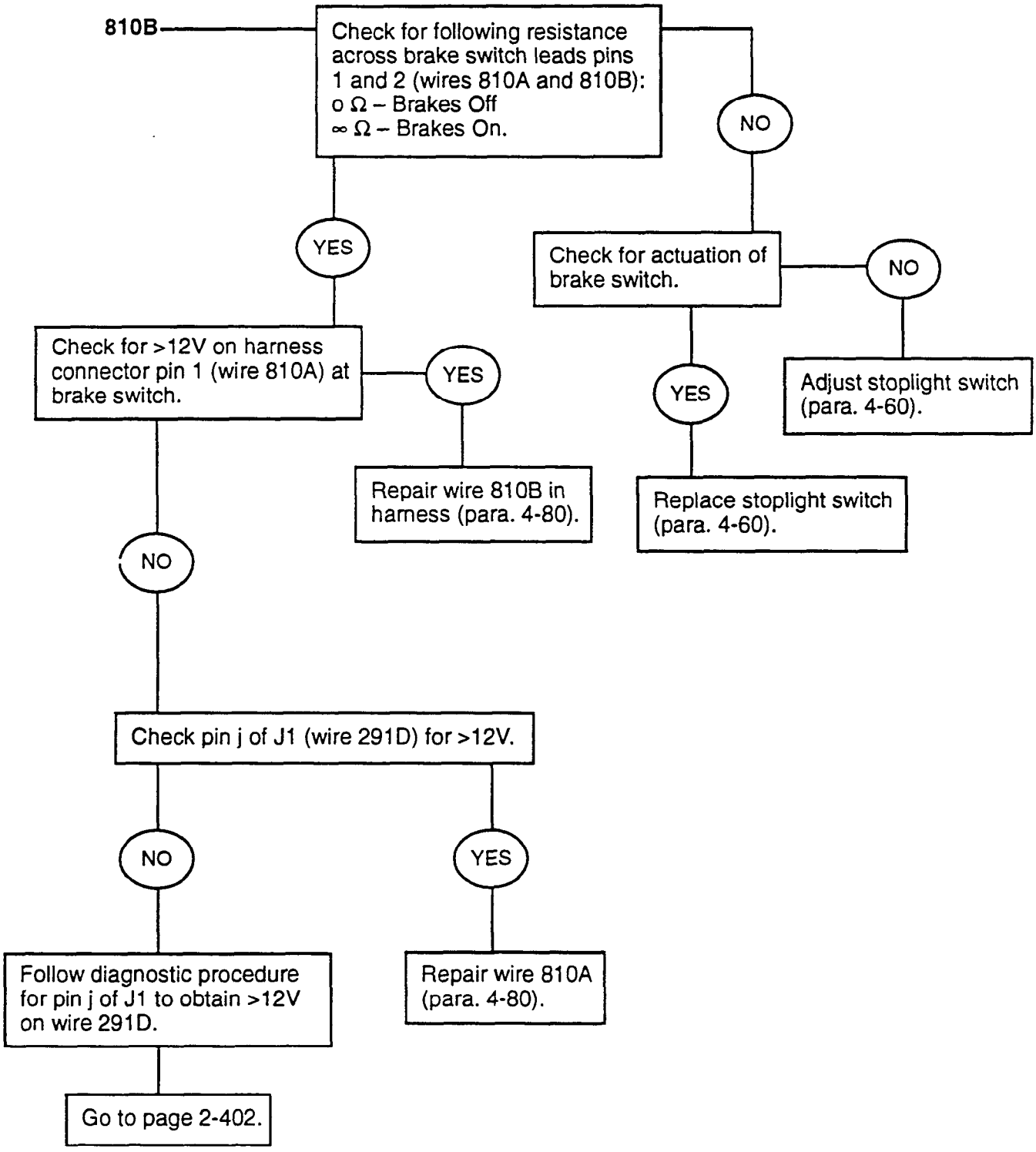

ENGINE RPM SENSOR

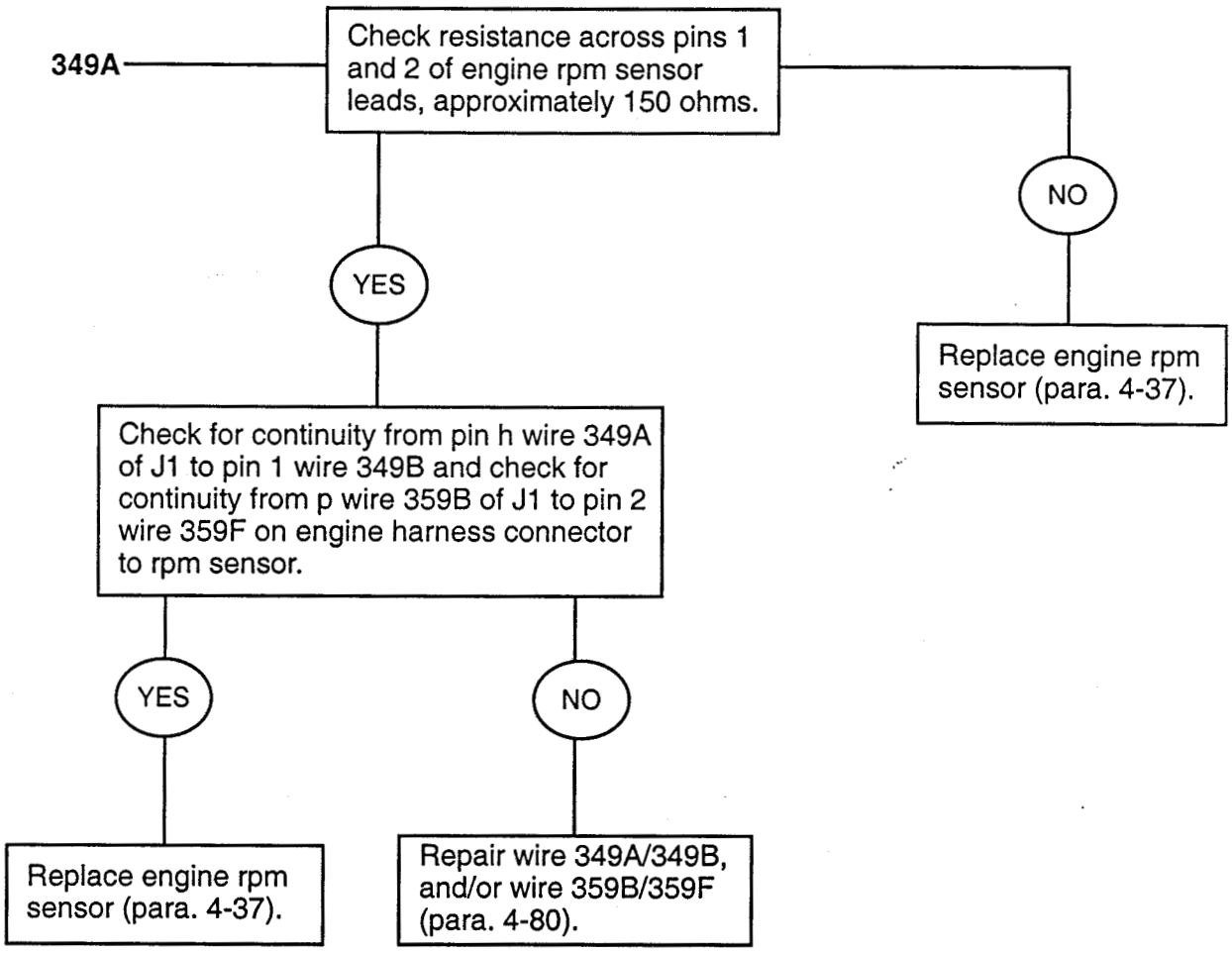

DIAGNOSTIC FLOWCHART **TRANSMISSION SYSTEM**

THROTTLE POSITION SENSOR CIRCUIT

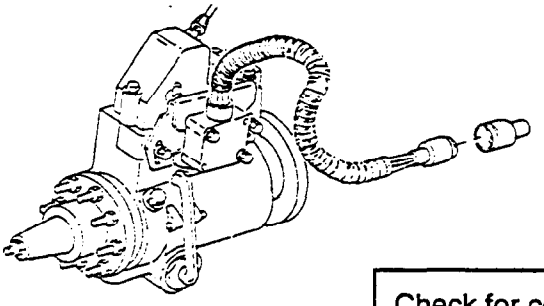

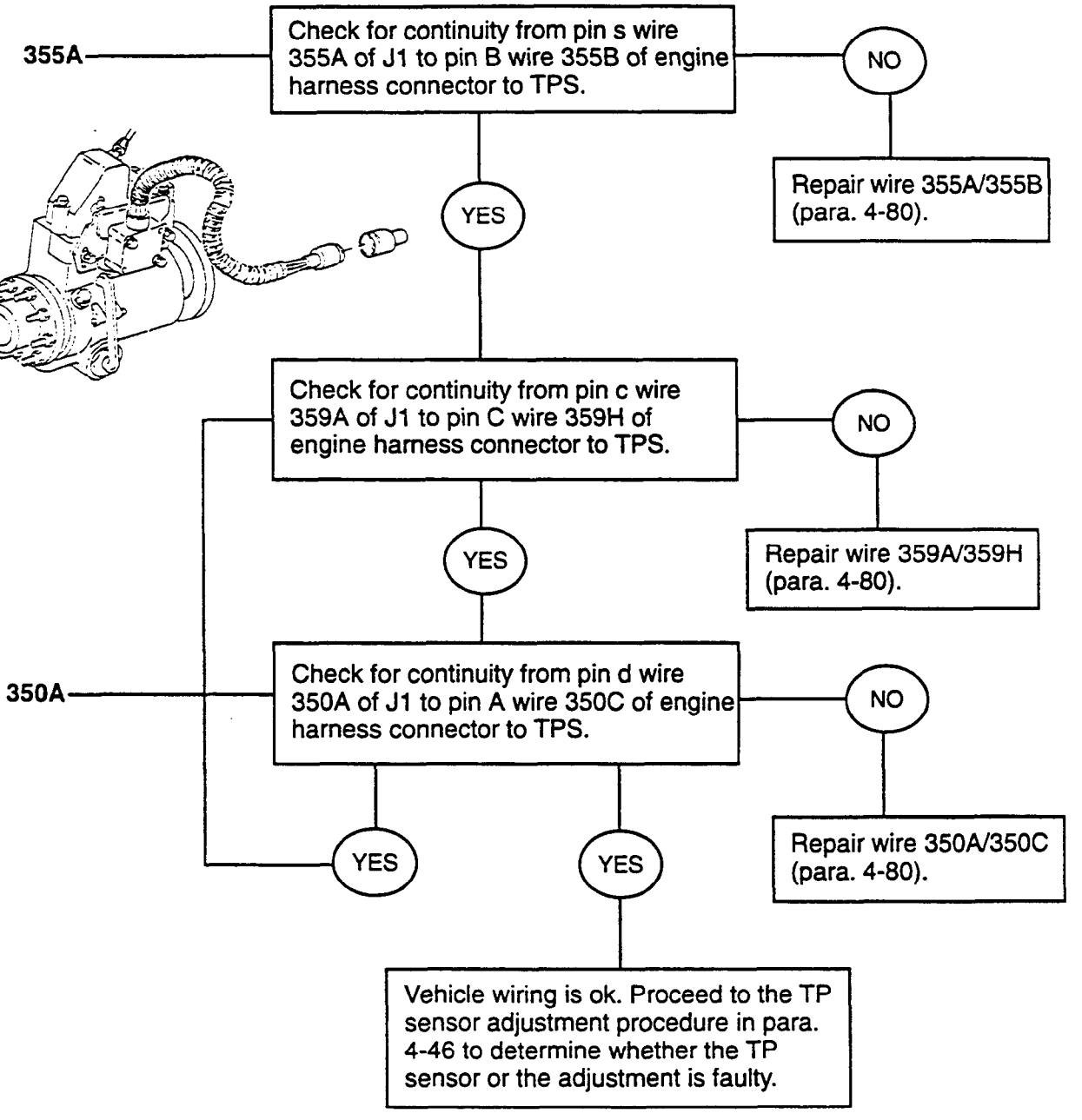

TRANSMISSION INPUT SPEED
SENSOR (TISS) CIRCUIT

NOTE

If reading from J1 diagnostics chart is above limit, perform high resistance - below limit, perform low resistance.

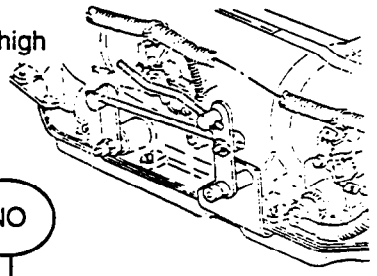

HIGH RESISTANCE

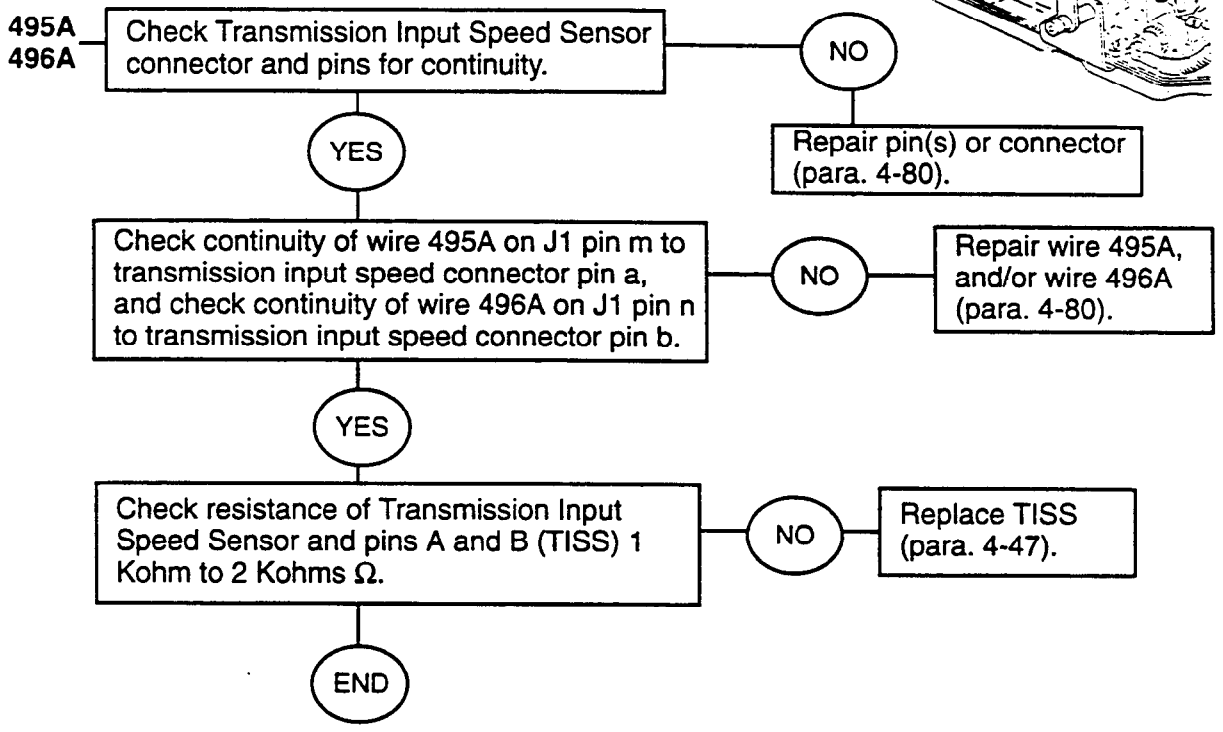

LOW RESISTANCE

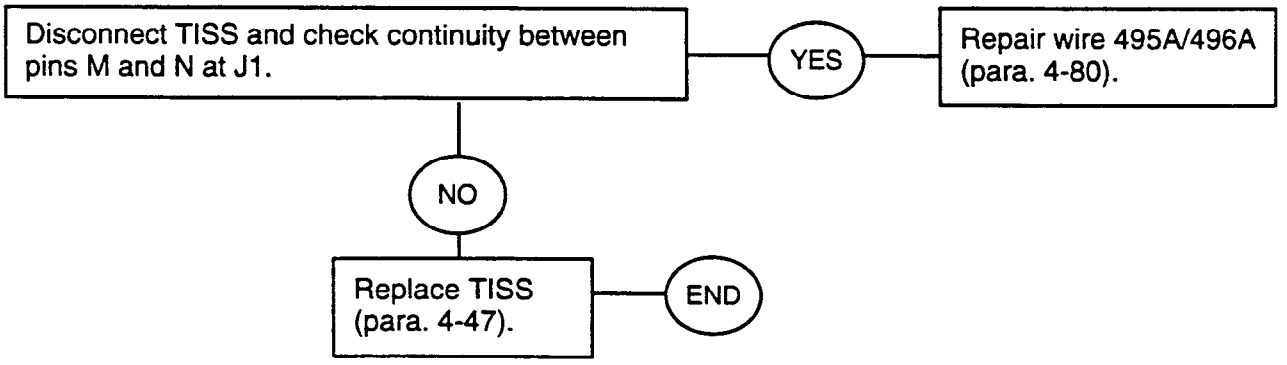

TRANSMISSION OUTPUT SPEED SENSOR (TOSS) CIRCUIT

NOTE

If reading from J1 diagnostics chart is above limit, perform high resistance - below limit, perform low resistance.

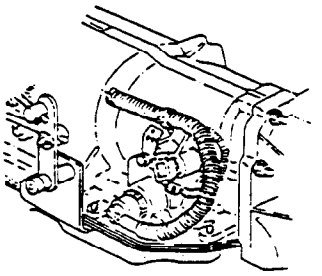

HIGH RESISTANCE

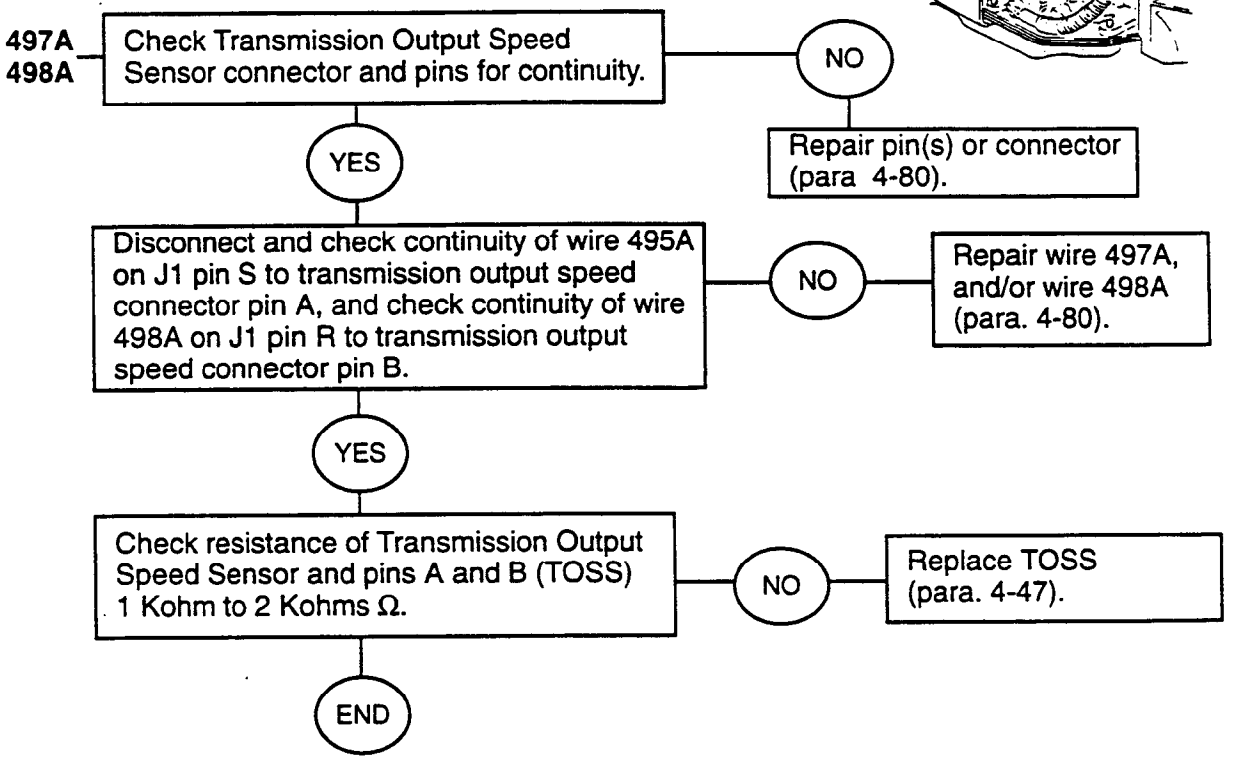

LOW RESISTANCE

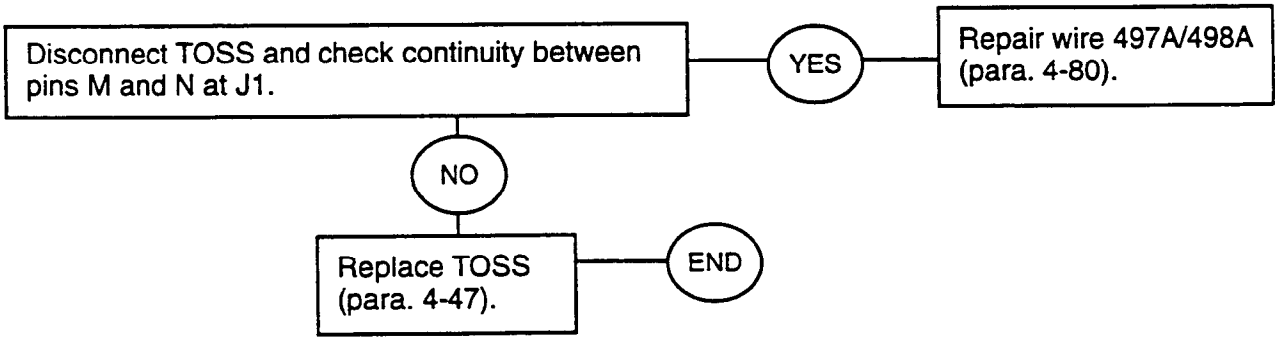

TORQUE CONVERTER CLUTCH
SOLENOID CIRCUIT

HIGH RESISTANCE

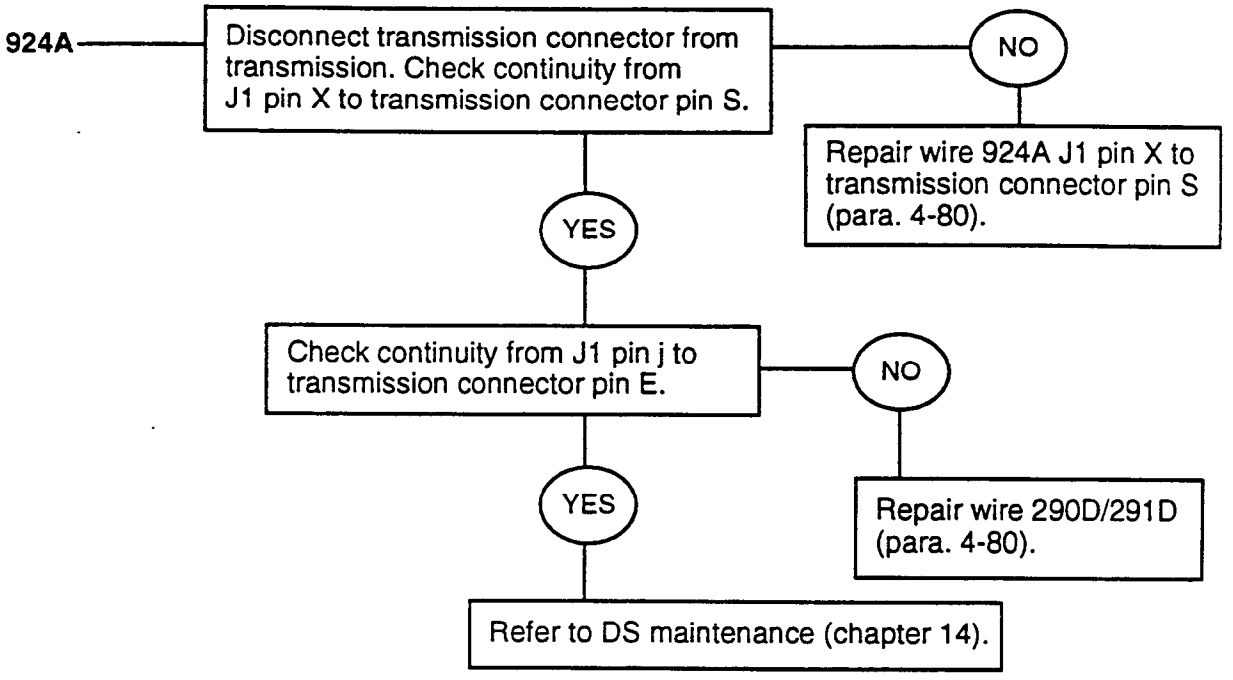

LOW RESISTANCE

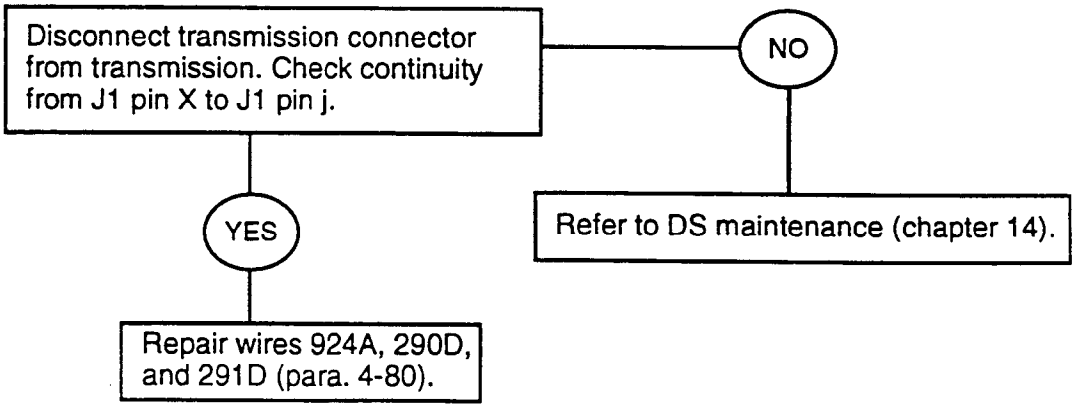

1-2 SHIFT SOLENOID CIRCUIT SHIFT SOLENOID A

HIGH RESISTANCE

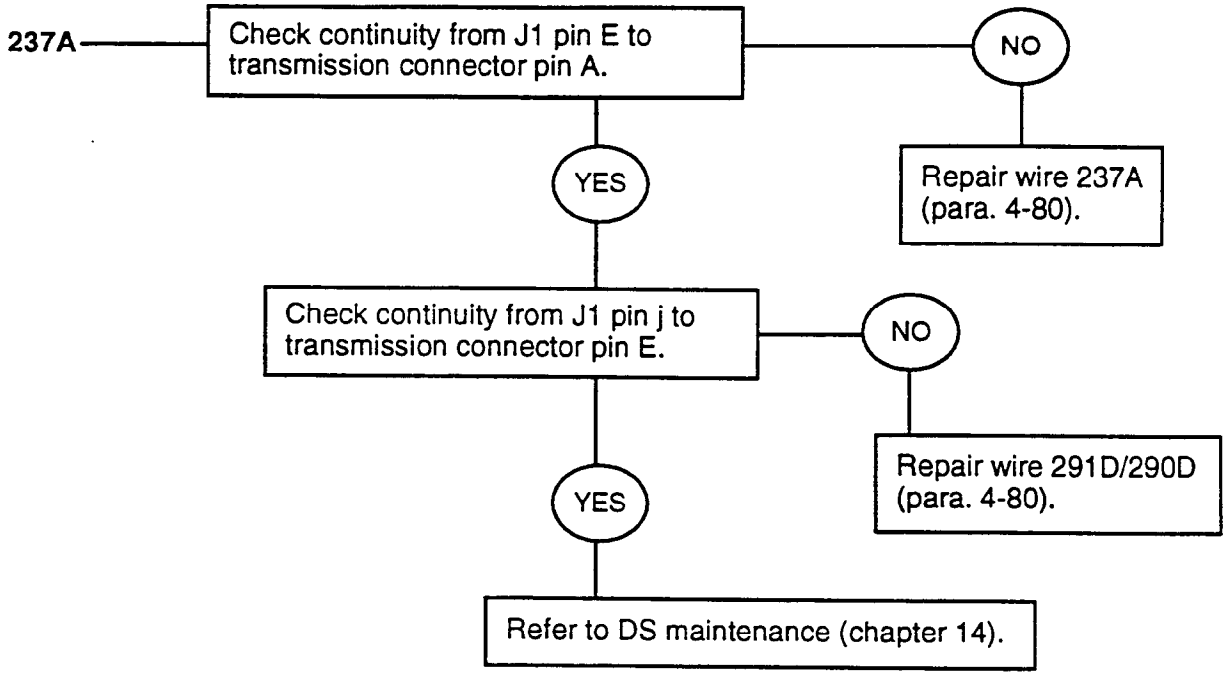

LOW RESISTANCE

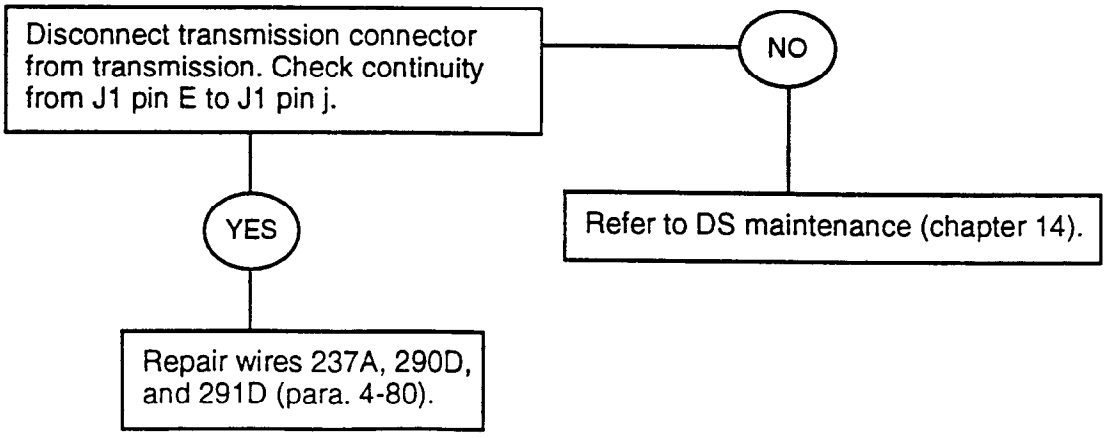

2-3 SHIFT SOLENOID CIRCUIT SHIFT SOLENOID B

HIGH RESISTANCE

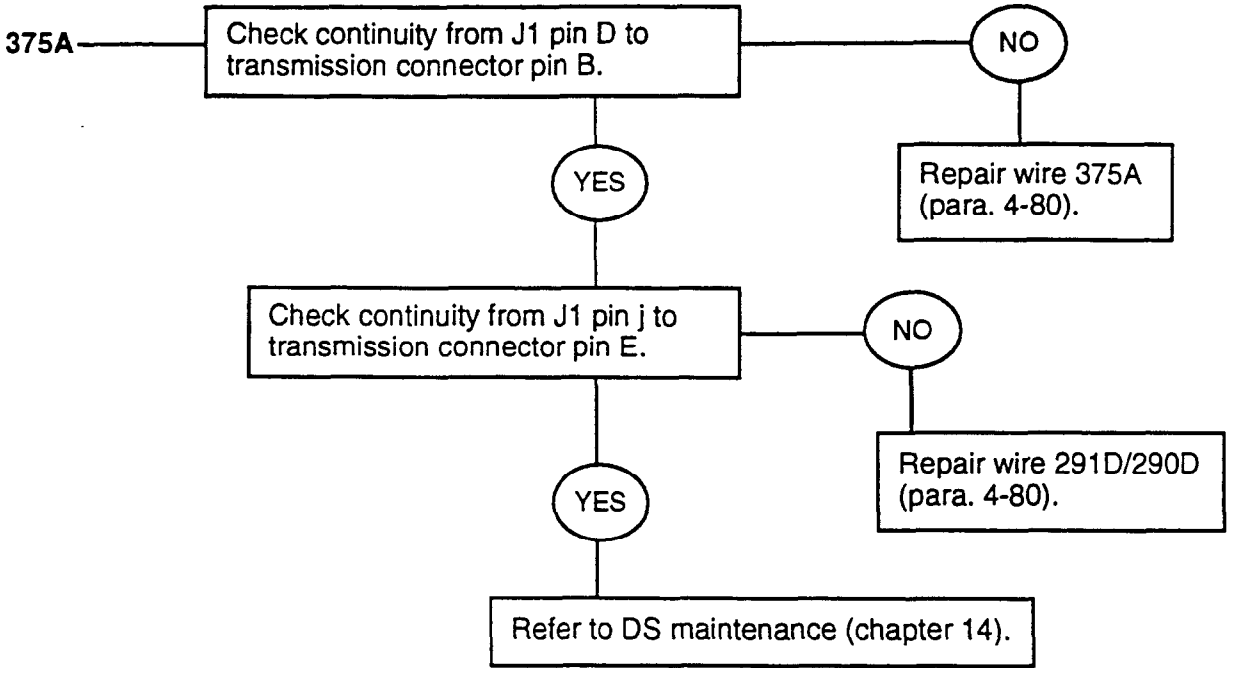

LOW RESISTANCE

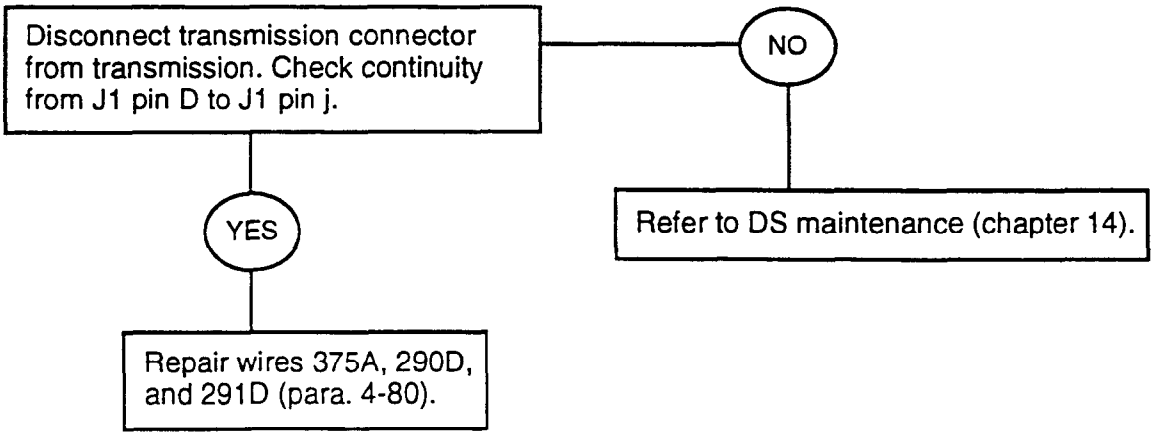

PRESSURE CONTROL SOLENOID CIRCUIT
FORCE MOTOR HIGH

HIGH RESISTANCE

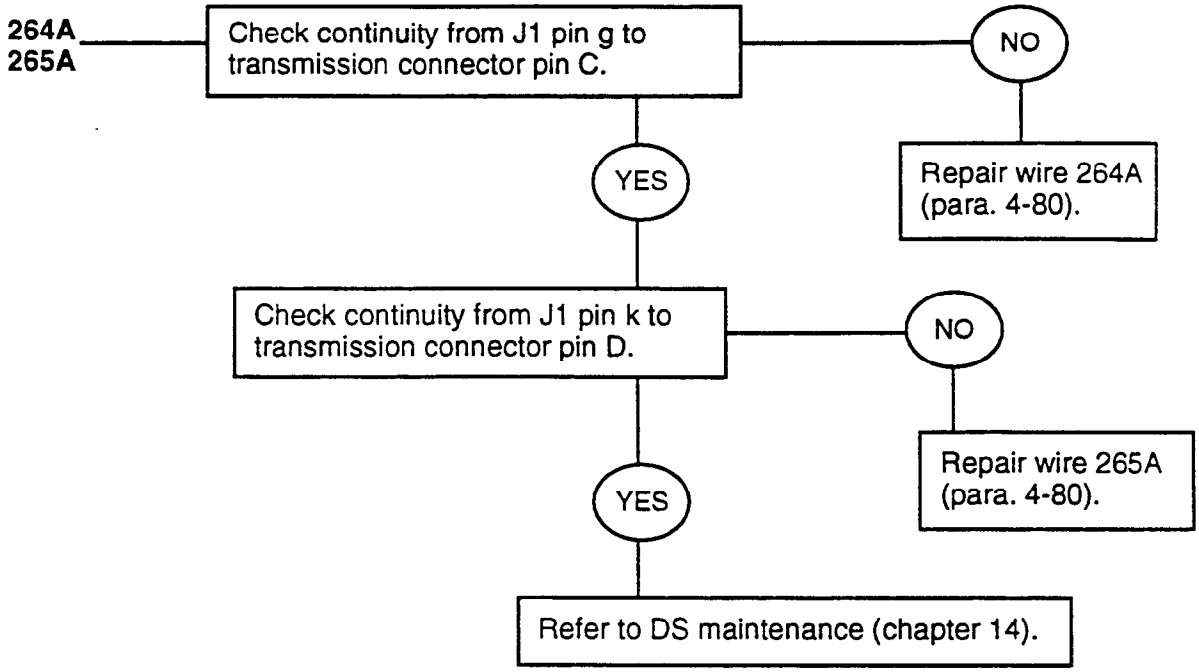

LOW RESISTANCE

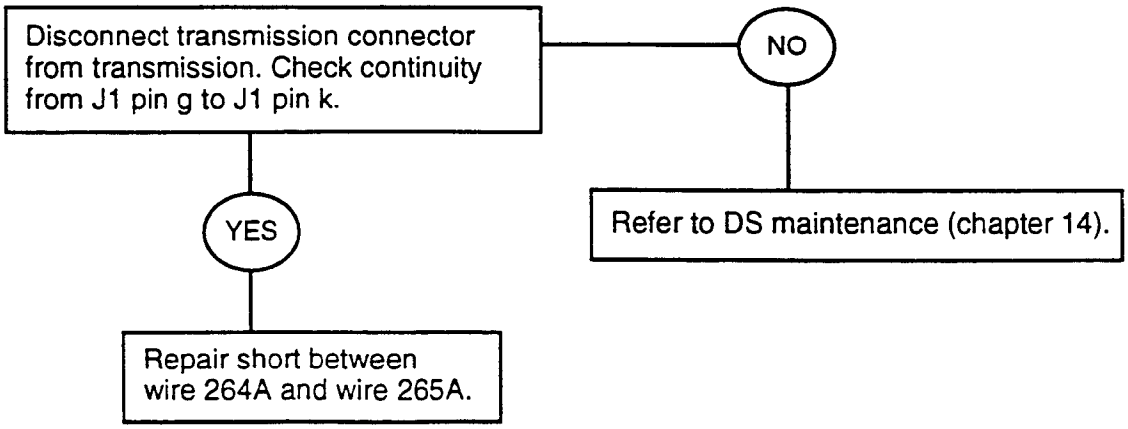

TRANSMISSION RANGE PRESSURE
SWITCH, CIRCUIT PRESSURE SWITCH A

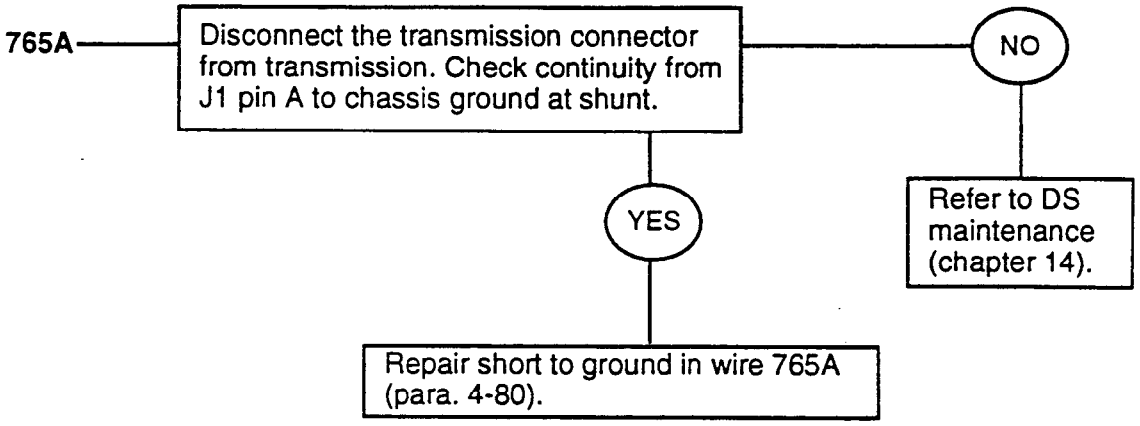

TRANSMISSION RANGE PRESSURE
SWITCH, CIRCUIT PRESSURE SWITCH B

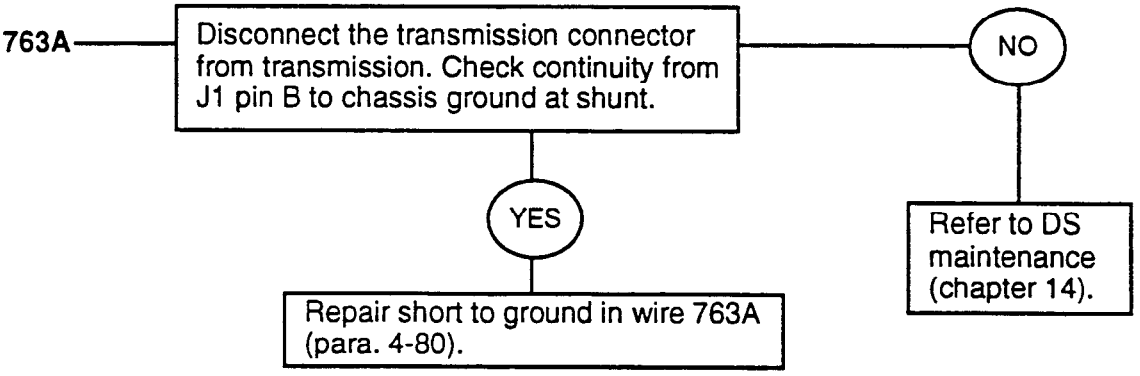

TRANSMISSION RANGE PRESSURE
SWITCH, CIRCUIT PRESSURE SWITCH C

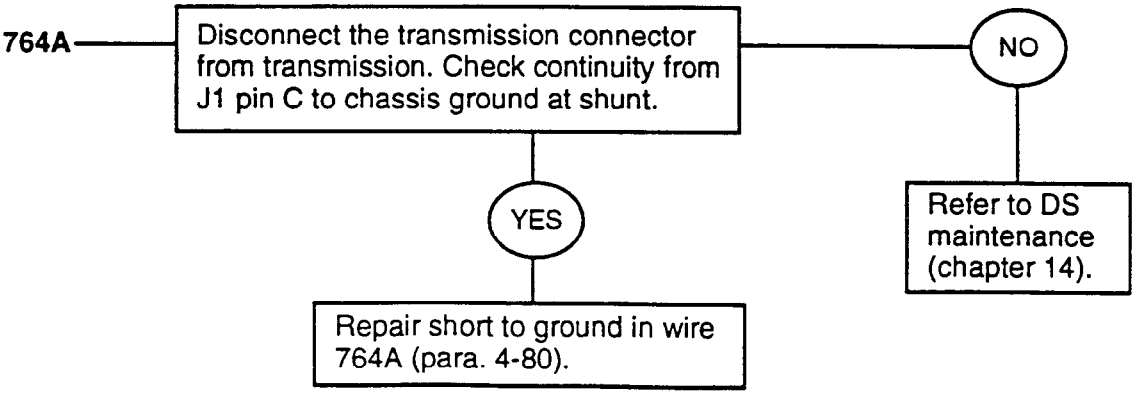

TRANSMISSION TEMPERATURE SENSOR

The Transmission Temperature Sensor (TTS) is a thermistor. The resistance decreases as the temperature increases. At 68°F (20°C), the resistance should be from 2,980 to 4,020 ohms. At 248°F (120°C), the resistance should be 90 to 111 ohms.

RESISTANCE TOO LOW

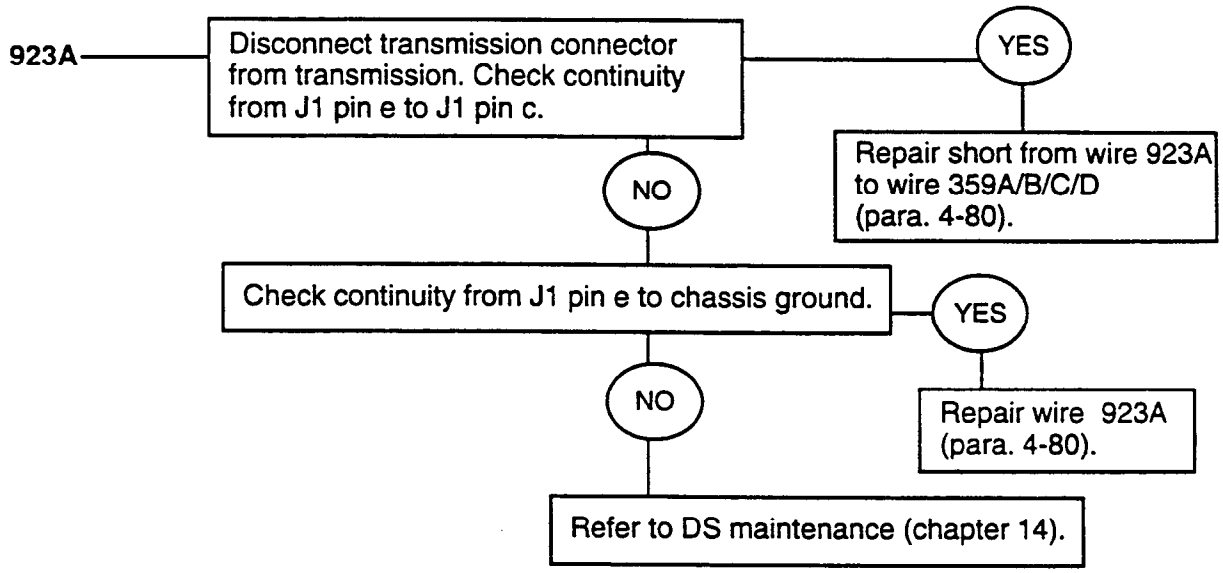

RESISTANCE TOO HIGH

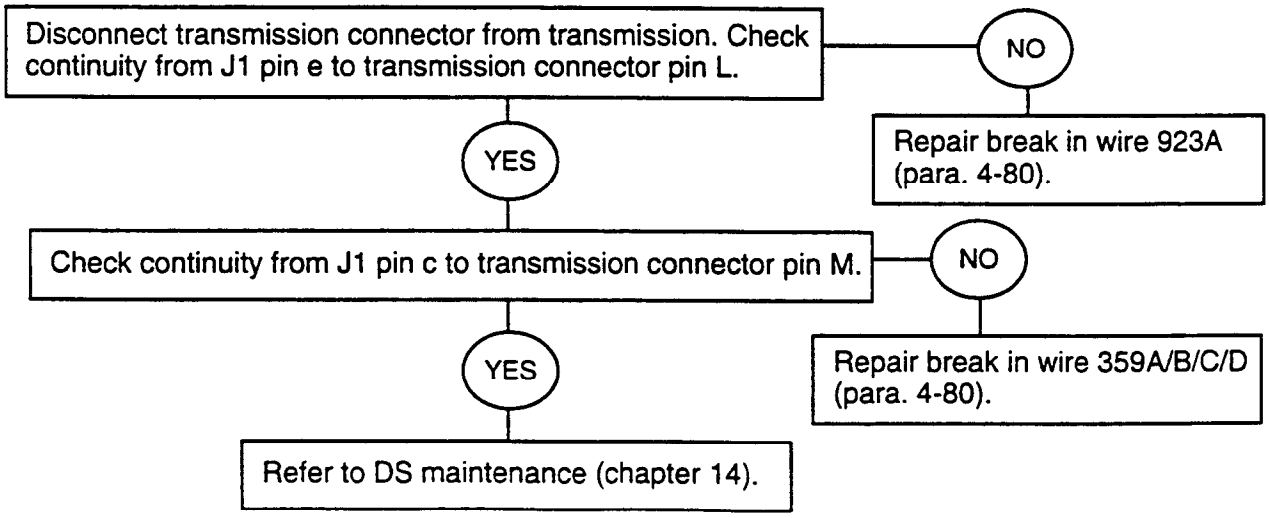

2-41. BRAKE SYSTEM TESTS

These brake system tests may be run any time you think you have a braking problem or if you were sent here by another test chain. Just follow the path, answering the questions. Additional information and notes are given on the facing page when necessary.

Fold-out page FP-23 may be left open for reference while testing.

NOTE

- The brake lights and the parking brake warning lamp are not diagnosed here. If you are having trouble with these parts and you are sure the brakes are OK, go to Instruments, page 2-314, for the warning lamp or lights; page 2-376 for the brake lights.

- When parking brake handle is pulled, the parking brake is applied to the left and right rear brake service rotors.

BRAKE SYSTEM **DIAGNOSTIC FLOWCHART**

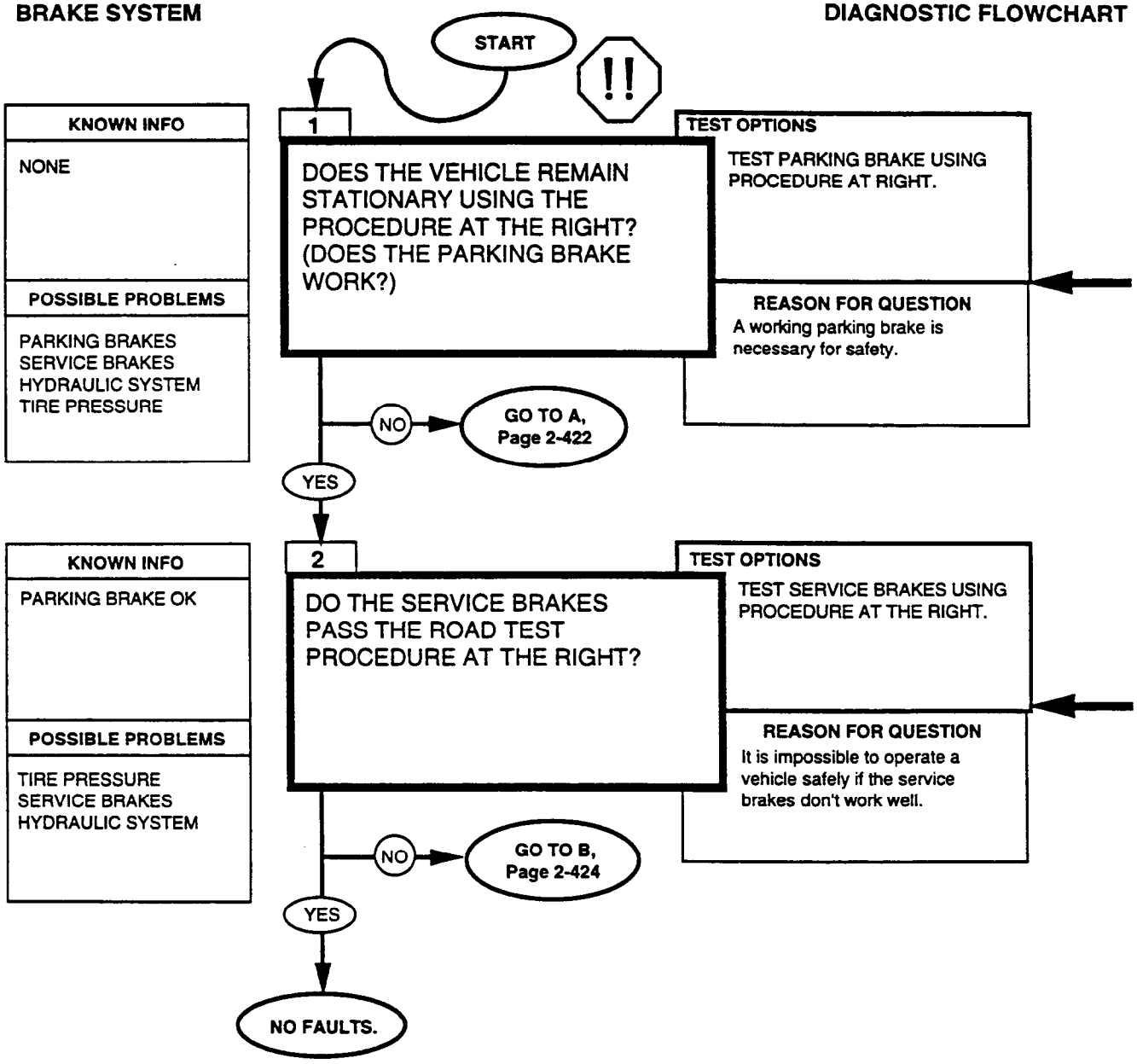

WARNING

Make sure the area is clear of personnel and obstacles prior to performing this test. Failure to do so may result in serious injury.

PARKING BRAKE TEST PROCEDURE:

1. Depress service brake pedal and start engine.
2. Place transmission shift lever in D (drive) and transfer case shift lever in H (high).
3. Apply parking brake. Slowly let up on service brake pedal. Vehicle should remain stationary.

SERVICE BRAKE ROAD TEST PROCEDURE:

1. On an open, smooth, flat surface, accelerate to a steady, reasonable, safe speed (below posted limits).
2. Apply pressure on the brake pedal and bring the vehicle to a stop.
3. Repeat this procedure several times, applying a different brake pedal pressure each time. Look for the following symptoms, which may indicate a problem with the service brakes:
   1) Spongy or pulsating brake pedal.
   2) Incomplete brake pedal return.
   3) Excessive pull to one side.
   4) Unusually long braking distance.
   5) Front wheels lock up before rear wheels.
   6) Brake warning light comes on while braking.
   7) A squealing, grinding, or chattering noise while braking.

BRAKE SYSTEM **DIAGNOSTIC FLOWCHART**

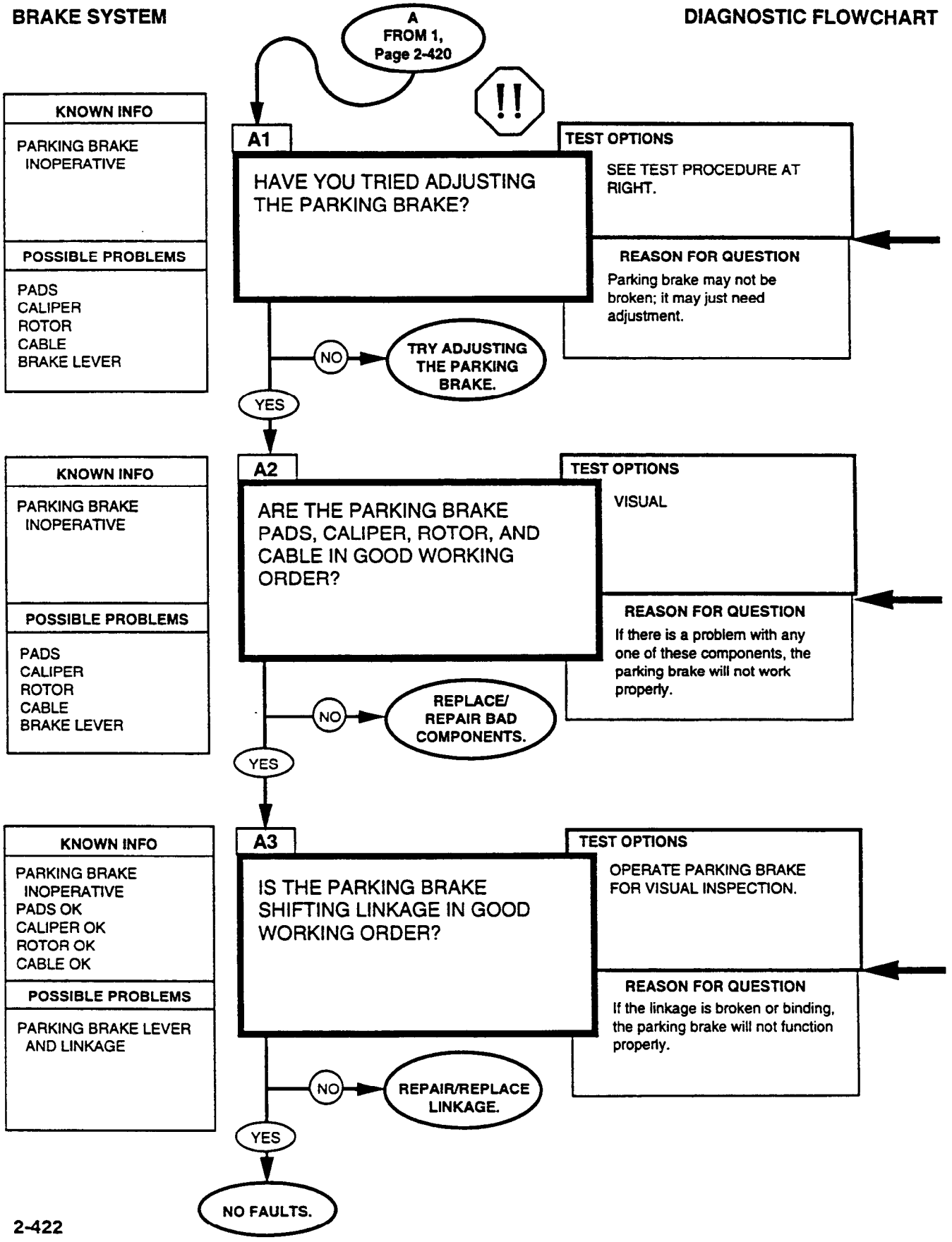

PARKING BRAKE ADJUSTMENT:

A. Chock wheels and release parking brake handle.

B. Turn adjusting knob at the tip of the brake handle clockwise as tight as possible by hand.

C. Apply parking brake handle.

D. If parking brake cannot be applied, turn adjusting knob counterclockwise until parking brake can be applied.

E. Test parking brake.

WARNING

Make sure the area is clear of personnel and obstacles prior to performing this test. Failure to do so may result in serious injury.

(1) Remove chocks.
(2) Depress service brake pedal and start engine.
(3) Place transmission shift lever in D (drive) and transfer case shift lever in H (high).
(4) Apply parking brake and slowly let up on service brake pedal. Vehicle should remain stationary.

Replace or repair parts (para. 7-1).

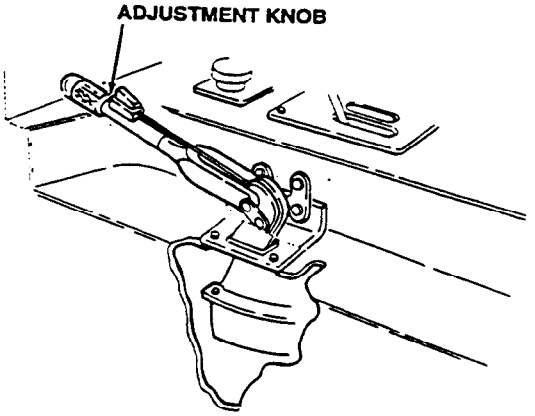

Repair or replace linkage (para. 7-19).

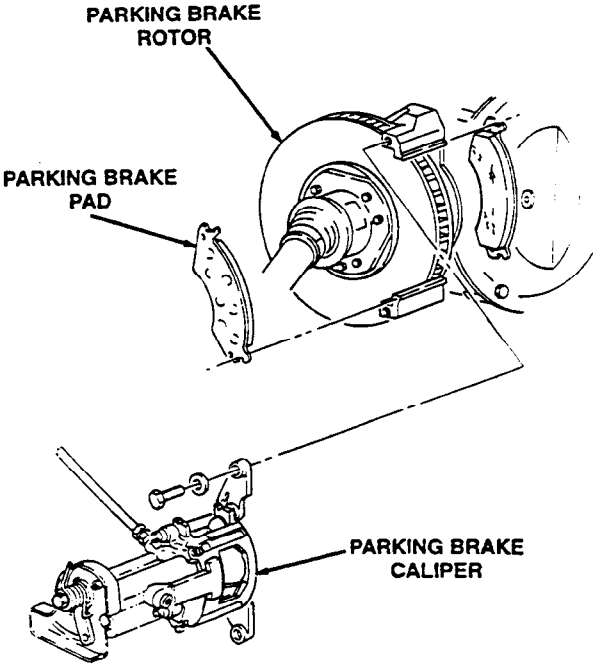

BRAKE SYSTEM **DIAGNOSTIC FLOWCHART**

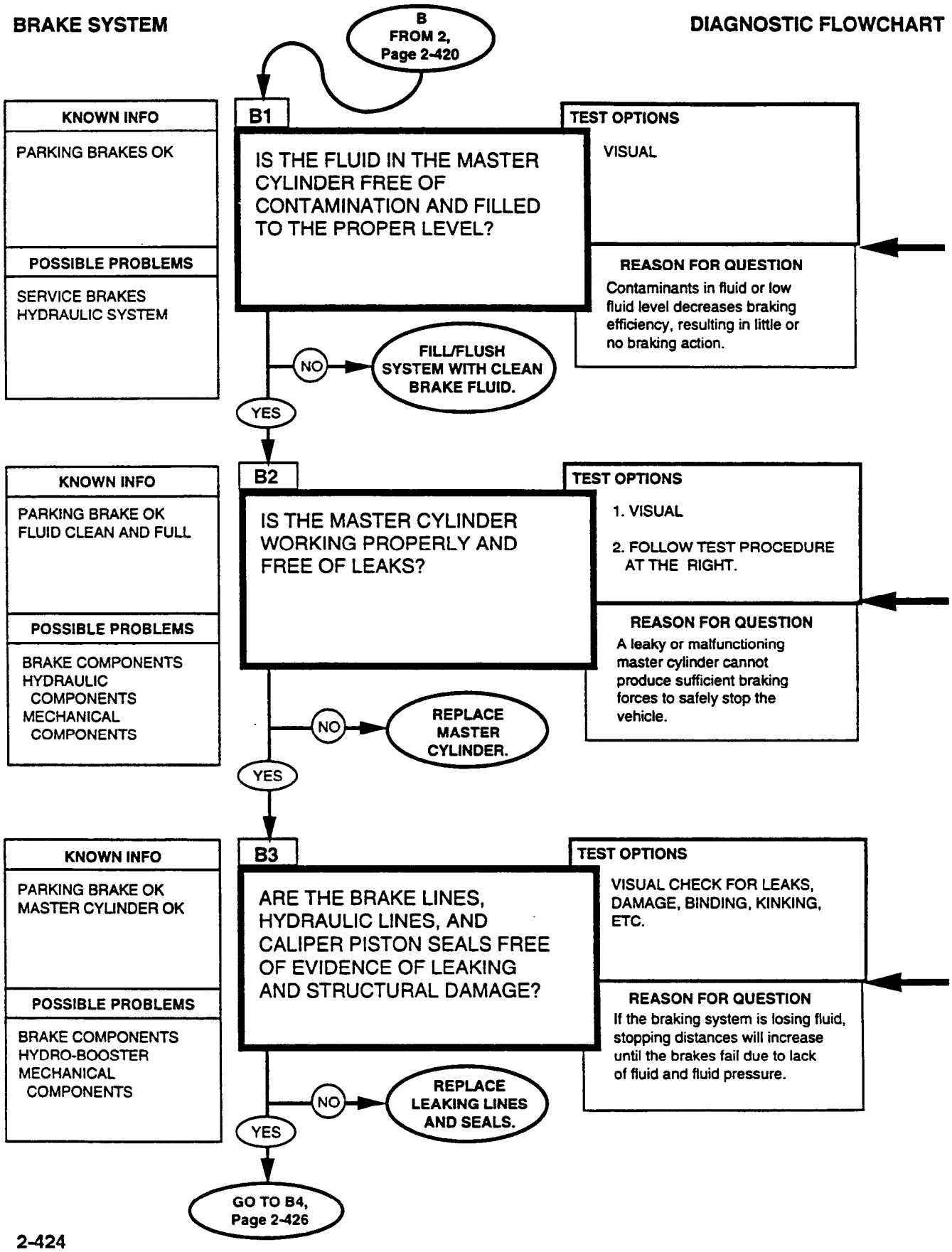

Flush and bleed the brake system (para. 7-2).

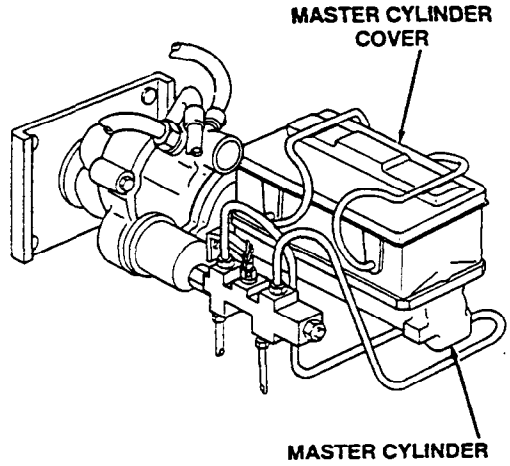

Master cylinder test procedure:

1. With the engine off, pump the brake pedal six or seven times, or until the pedal becomes noticeably stiffer and harder to depress.
2. Press hard on the brake pedal. If the pedal keeps going down to the floor, either the master cylinder is bad or there is a leak in the hydraulic system.

Replace master cylinder (para. 7-5).

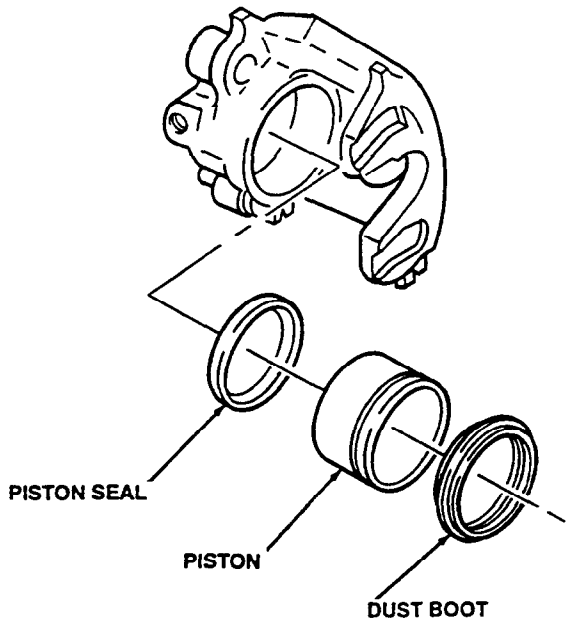

Check the individual lines going to each brake. Check the supply and return lines to the hydro-booster unit. Replace brake line (para. 7-7).

NOTE

Brake hydraulic system must be bled of air whenever hydraulic lines are broken.

Bleed service brake (para. 7-2).

FROM B3, Page 2-424

B4

KNOWN INFO

PARKING BRAKE OK
MASTER CYLINDER OK
NO VISIBLE LEAKS

POSSIBLE PROBLEMS

BRAKE PADS
CALIPERS
ROTORS
PROPORTIONING VALVE
HYDRO-BOOSTER
MECHANICAL COMPONENTS

ARE THE BRAKE PADS FREE FROM CONTAMINATION, DIRT, DISTORTION, AND EXCESSIVE WEAR?

TEST OPTIONS

VISUAL

REASON FOR QUESTION

Dirty, bent, or thin brake pads could cause problems such as noisy brakes, erratic braking, or excessive pedal pressure.

NO → REPLACE PADS IN PAIRS (FRONT OR REAR).

YES ↓

B5

KNOWN INFO

PARKING BRAKE OK
MASTER CYLINDER OK
BRAKE PADS OK

POSSIBLE PROBLEMS

ROTORS
CALIPERS
PROPORTIONING VALVE
HYDRO-BOOSTER
MECHANICAL COMPONENTS

ARE THE FOUR SERVICE BRAKE ROTORS FREE FROM HEAVY SCORING, EXCESSIVE WEAR, WARPING, HEAT-SPOTTING, GLAZING, AND CHIPPING?

TEST OPTIONS

VISUAL

REASON FOR QUESTION

Damaged rotors reduce braking ability and speed up brake failure due to excessive heat buildup.

NO → REPLACE BAD ROTORS.

YES ↓

B6

KNOWN INFO

PARKING BRAKE OK
MASTER CYLINDER OK
BRAKE PADS OK

POSSIBLE PROBLEMS

ROTORS BINDING
CALIPERS BINDING
PROPORTIONING VALVE
HYDRO-BOOSTER
MECHANICAL COMPONENTS

DO THE FOUR SERVICE BRAKE ROTORS ROTATE FREELY?

TEST OPTIONS

TRY TO ROTATE ROTORS WHILE WHEELS ARE RAISED.

REASON FOR QUESTION

Sticky rotors can cause erratic braking behavior.

NO → SEE NOTE AT RIGHT.

YES ↓

GO TO B7, Page 2-428

Replace brake pad (para. 7-3).

The minimum brake pad thickness is 1/8 in. (3.2 mm).

Replace service brake rotor(s) (para. 7-12).

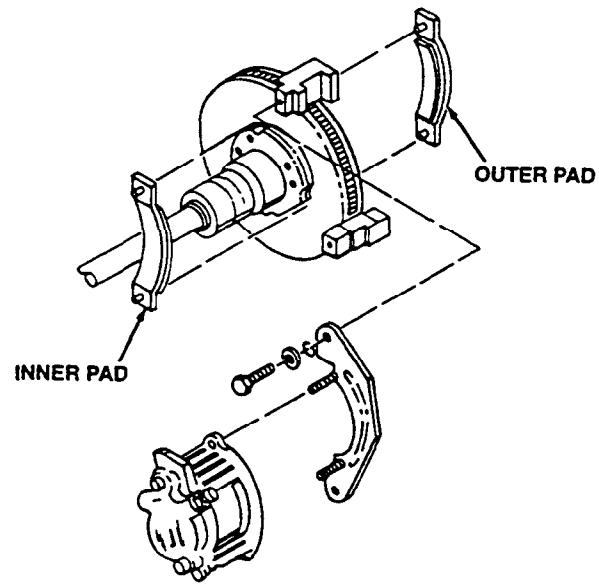

The only way the rotors can be sticking is if the calipers are not releasing fully.

Remove calipers. Clean and lubricate guide pins with grease.

Replace and clean brake caliper (para. 7-4).

FROM B6, Page 2-426

B7

KNOWN INFO

PARKING BRAKE OK
MASTER CYLINDER OK
BRAKE PADS OK
ROTORS OK
CALIPERS OK

POSSIBLE PROBLEMS

PROPORTIONING VALVE
HYDRO-BOOSTER
MECHANICAL COMPONENTS

DOES THE PROPORTIONING VALVE WORK PROPERLY?

TEST OPTIONS

SEE TEST EXPLANATION AT RIGHT.

REASON FOR QUESTION

This valve regulates the flow of hydraulic fluid. If it's broken, the brakes may behave erratically.

NO → REPLACE PROPORTIONING VALVE.

YES ↓

B8

KNOWN INFO

PARKING BRAKE OK
MASTER CYLINDER OK
BRAKE PADS OK
ROTORS OK
CALIPERS OK
PROPORTIONING VALVE OK

POSSIBLE PROBLEMS

HYDRO-BOOSTER
MECHANICAL COMPONENTS

IS THE HYDRO-BOOSTER WORKING PROPERLY?

TEST OPTIONS

SEE INSTRUCTIONS AT RIGHT.

REASON FOR QUESTION

The hydro-booster is an integral part of the braking system.

NO → GO TO C, Page 2-430

YES ↓

B9

KNOWN INFO

PARKING BRAKE OK
MOST BRAKE SYSTEM COMPONENTS OK

POSSIBLE PROBLEMS

PEDAL RETURN SPRING
PEDAL BUSHING
FRONT TOE-IN
REAR TOE-OUT

LOOK AT THE BRAKE PEDAL. DOES IT MOVE THROUGH ITS FULL OPERATING RANGE?

TEST OPTIONS

VISUAL INSPECTION - SPECIFICALLY CHECK PEDAL RETURN SPRING AND BUSHING.

REASON FOR QUESTION

A brake pedal that doesn't return to its normal position could cause the brakes to drag.

NO → REPAIR/REPLACE WORN PARTS.

YES ↓

GO TO STEERING, Page 2-433

Test for faulty proportioning valve:

Drive the vehicle and have an assistant observe during the performance of this test.

With vehicle at curb weight, decelerate vehicle from 45 to 40 mph (72 to 69 kph) on dry concrete road and apply sufficient pressure to lock up front brakes. If rear brakes lock up before front brakes, the proportioning valve should be replaced.

Replace proportioning valve (para. 7-10).

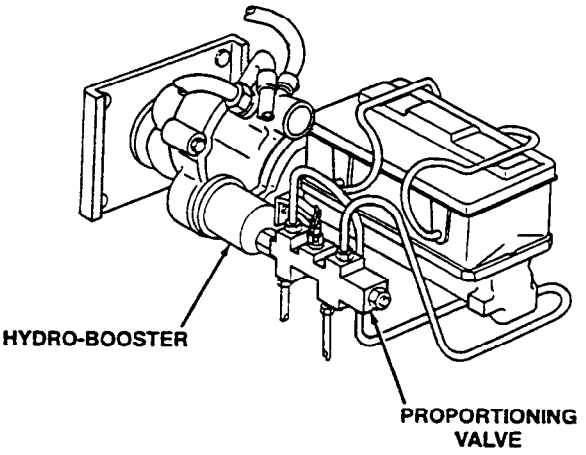

Method for checking hydro-booster:

Depress brake pedal several times to exhaust accumulator pedal. Depress brake pedal and start engine. Brake pedal should fall, then push back against operator's foot.

Replace hydro-booster (para. 7-6).

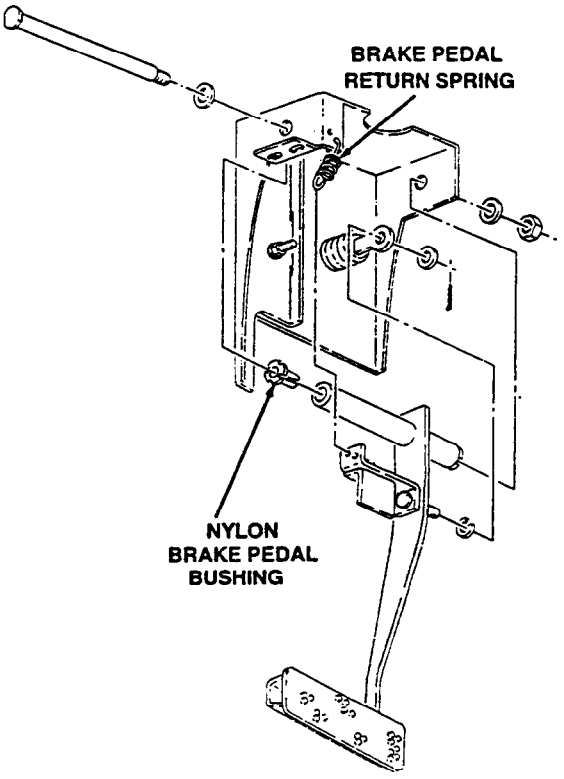

Replace service brake pedal (para. 7-9).

The steering tests will check for suspension problems that will affect braking.

BRAKE SYSTEM **DIAGNOSTIC FLOWCHART**

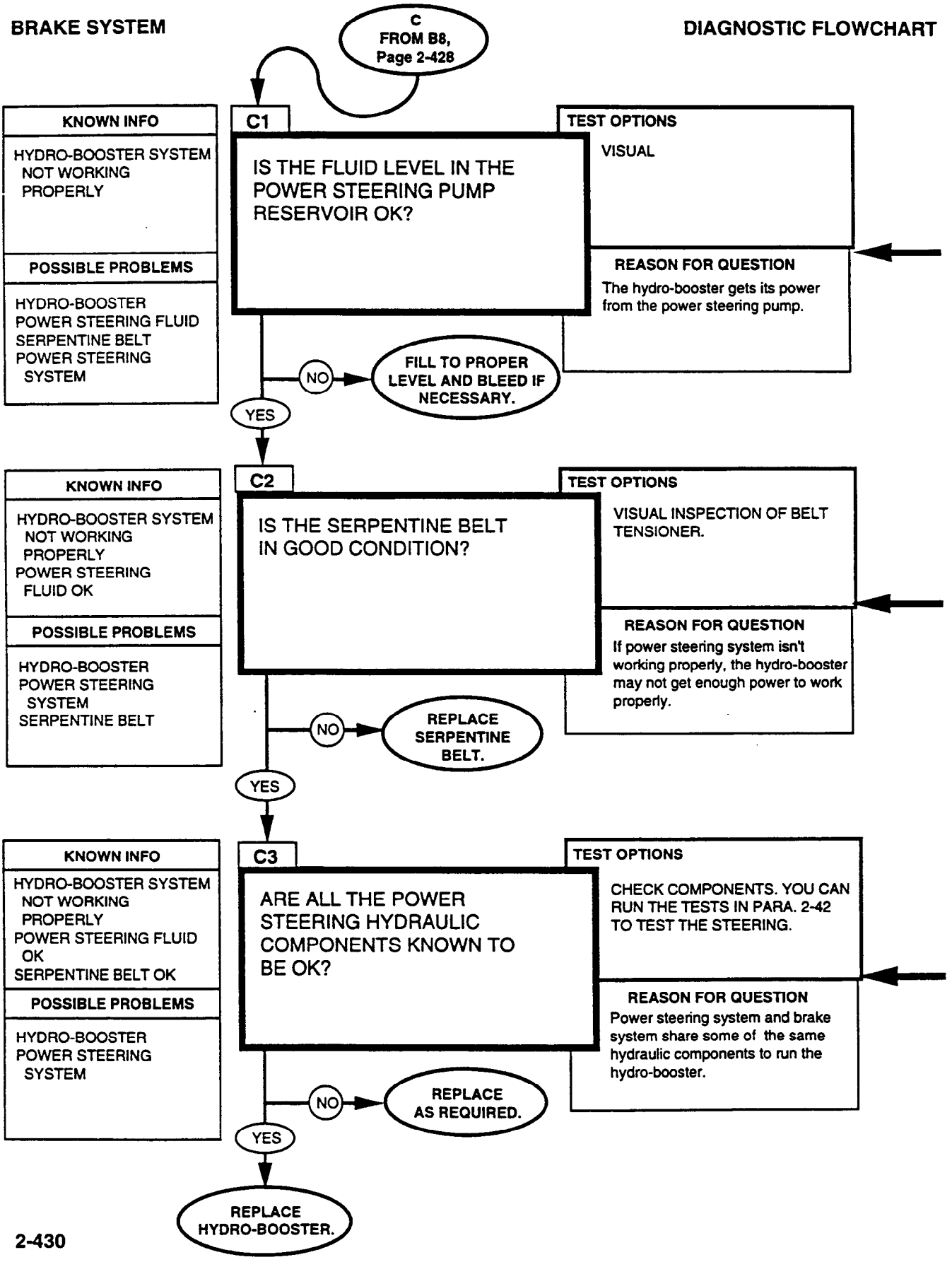

Bleed power steering system (para. 8-27).

Replace serpentine belt (para. 3-81).

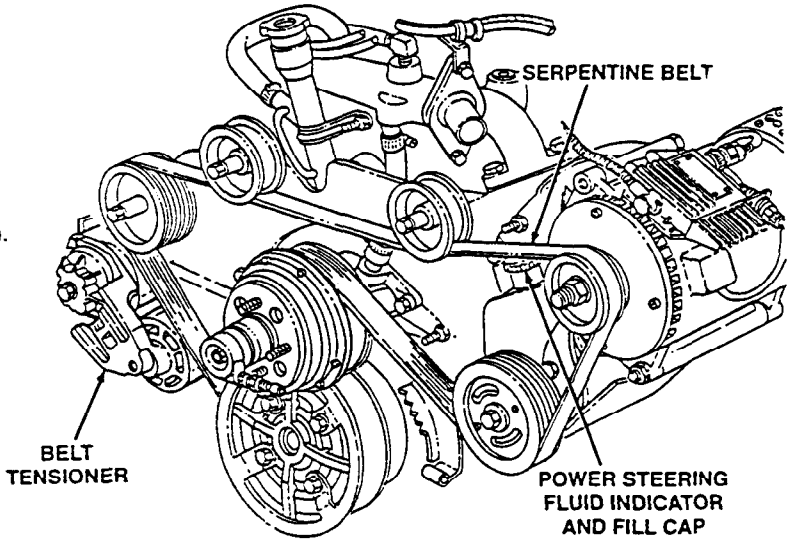

A defective power steering pump, gear, hoses, or control valve could affect hydro-booster operation.

2-42. STEERING SYSTEM TESTS

These steering system tests may be run any time you have a steering problem or if you were sent here by another test chain. Just follow the path, answering the questions. Additional information and notes are given on the facing page when necessary.

The fold-out page shows the location of the major components of the steering in case you are not familiar with them. These parts are shown in a schematic manner. Illustrations of the actual components are given wherever applicable on the reference pages of the diagnostics.

Fold-out page FP-25 may be left open for reference while testing. The functional flow diagram shows the mechanical and hydraulic parts of the system and how they interact. Even if the hydraulic system fails, you will still be able to steer the vehicle, although it will require more effort.

STEERING SYSTEM

DIAGNOSTIC FLOWCHART

START

!!

1

KNOWN INFO

NOTHING

POSSIBLE PROBLEMS

POWER STEERING PUMP
POWER STEERING COMPONENTS
STEERING LINKAGES
SUSPENSION
BRAKES

DOES THE VEHICLE STEER STRAIGHT WHILE BRAKING (WHILE GOING FORWARDS AND BACKWARDS)?

TEST OPTIONS

DRIVE VEHICLE AND MAKE SEVERAL STOPS AT MODERATE SPEEDS FROM FORWARD AND REVERSE DIRECTIONS.

REASON FOR QUESTION

If vehicle pulls to one side or other while braking, the problem is likely to be in the brake system.

NO → **GO TO BRAKES, Page 2-419. RETURN IF NO FAULTS FOUND.**

YES

2

KNOWN INFO

BRAKING SYSTEM OK

POSSIBLE PROBLEMS

POWER STEERING PUMP
POWER STEERING COMPONENTS
STEERING LINKAGES
SUSPENSION
BRAKES GRABBING

DOES THE VEHICLE STEER STRAIGHT WHILE DRIVING ON A LEVEL ROAD AT A MODERATE SPEED?

TEST OPTIONS

TRY IT. THE VEHICLE SHOULD NOT WANDER, BUT TRACK STRAIGHT WITH A MINIMUM OF STEERING EFFORT.

REASON FOR QUESTION

The vehicle should travel in a straight line with a minimum of steering correction.

NO → **GO TO A, Page 2-438**

YES

3

KNOWN INFO

BRAKES OK
STRAIGHT LINE BEHAVIOR OK

POSSIBLE PROBLEMS

POWER STEERING PUMP
POWER STEERING COMPONENTS
STEERING LINKAGES
SUSPENSION

DOES THE VEHICLE STEER NORMALLY DURING TURNS (WITHOUT UNDUE EFFORT)?

TEST OPTIONS

DRIVE VEHICLE AND MAKE TURNS.

REASON FOR QUESTION

Hard or noisy steering is usually due to power steering system failures.

NO → **GO TO B, Page 2-440**

YES

GO TO 4, Page 2-436

WARNING

Make sure that the area where you conduct these tests is free of natural and man-made obstructions. Failure to do so may result in serious injury.

PRIOR TO PERFORMING THESE TESTS:

Visually inspect steering components:

1. Check all four tires and rims for wear, inflation, damage, or warping.
   a. Adjust tire pressure (TM 9-2320-387-10).
   b. Replace any unserviceable rims (para. 8-4).
2. Check steering linkage for damage.
   a. Replace any damaged steering linkage components (para. 8-11).
   b. Lubricate steering linkage (TM 9-2320-387-10).
3. Check power steering fluid for contamination and level (TM 9-2320-387-10).
   a. Drain and replace any fluid that appears black and smells burnt.
   b. Bleed air from system where fluid appears milky white (para. 8-27).
4. Check serpertine drivebelt for fraying, cracks, or damage. Replace damaged serpentine drivebelt (para. 3-81).

While travelling at a moderate speed (20 mph (32 kph)), apply the brakes while applying minimal pressure to the steering wheel. If pull to one side or the other occurs, make a note of the speed and on what side of the vehicle it occurs. Repeat this procedure for different speeds and braking forces. If the vehicle seems to steer straight while braking, there probably isn't a problem with the brakes (at least not one that affects the steering). If the braking action feels strange in any way, the brake diagnostics should be run to assure vehicle safety. This test will usually reveal problems with frozen brake calipers.

If the wheels are out of alignment or if the tires are worn unevenly, vehicle may wander.

Symptoms of bad steering characteristics include hard steering, excesssive play in steering, a momentary increase in steering effort when turning wheel quickly, and jerking of the steering wheel when turning.

STEERING SYSTEM

DIAGNOSTIC FLOWCHART

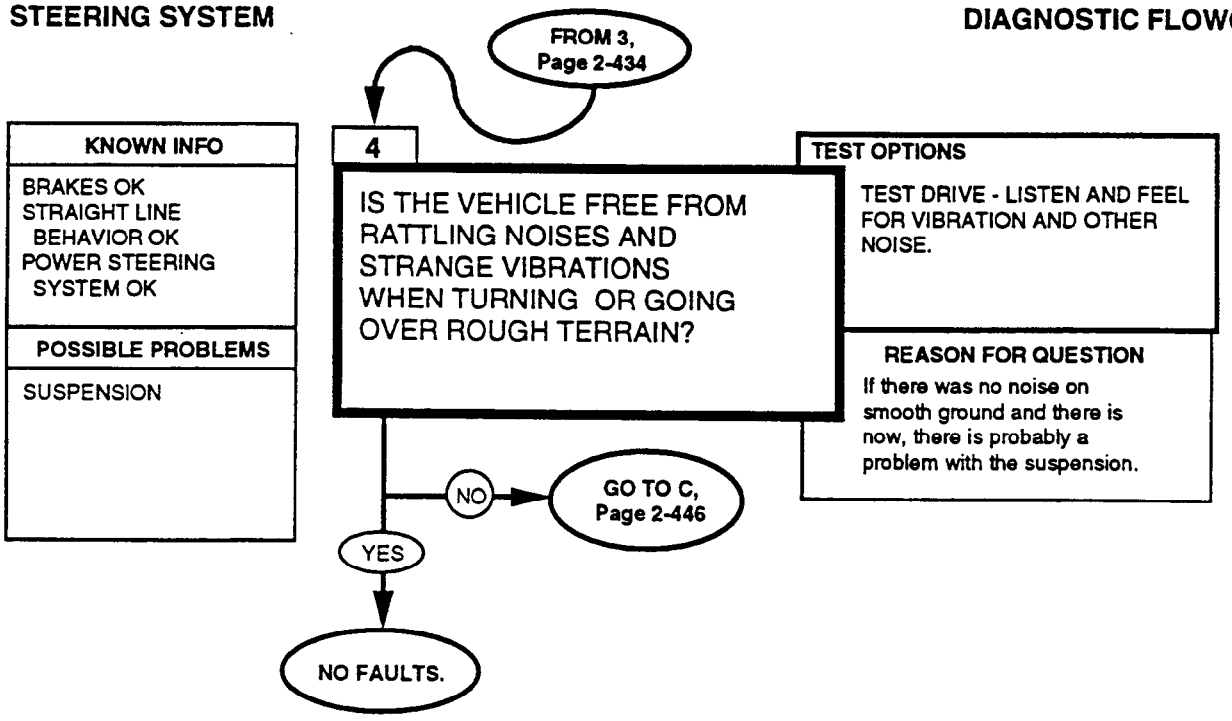

Drive the vehicle until the tires warm up. If the condition goes away, it was probably caused by a burst lube pack or a flat spot on a tire. Both of these conditions are OK since the vehicle will operate normally after the tires warm up.

STEERING SYSTEM

DIAGNOSTIC FLOWCHART

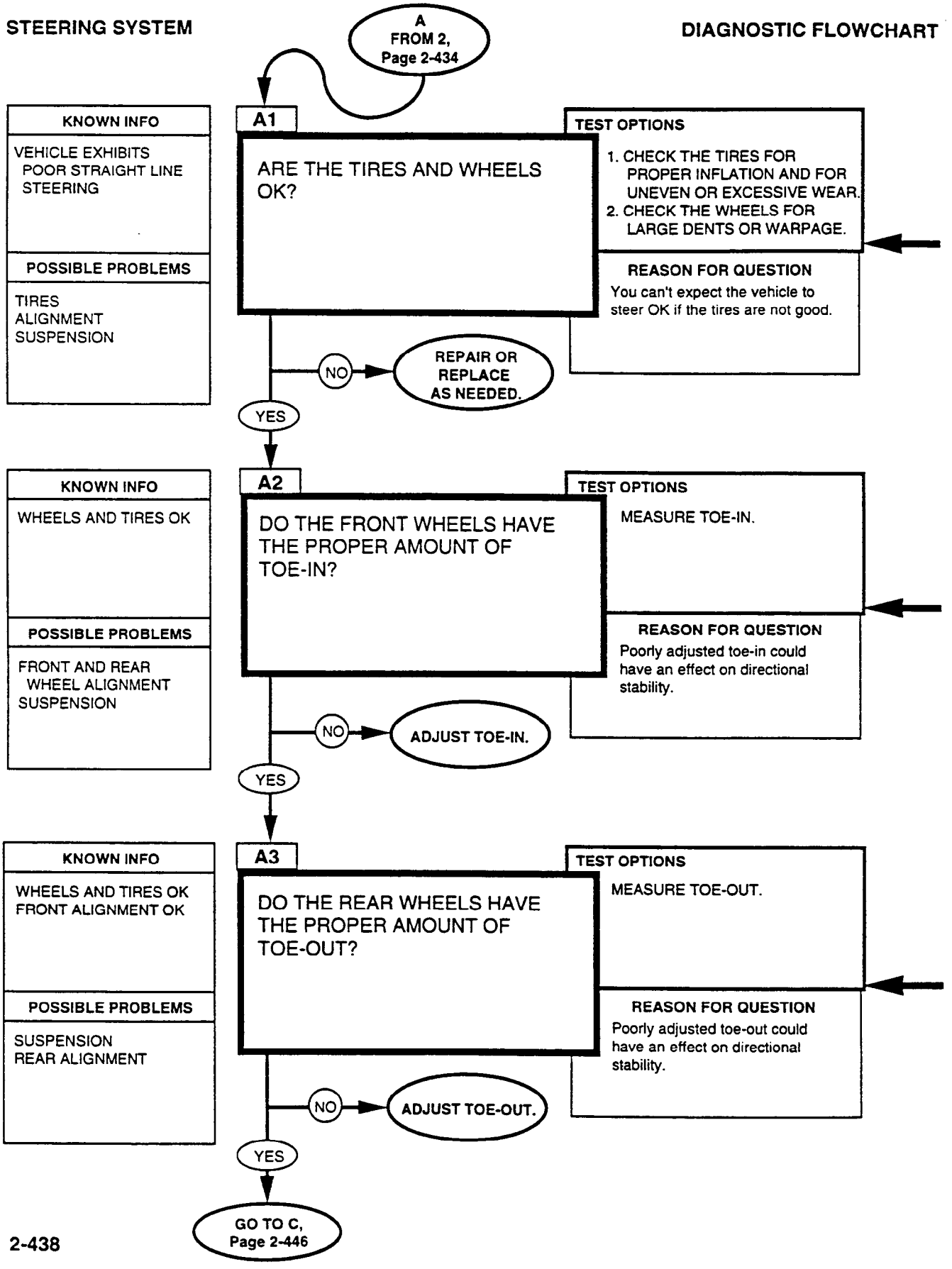

Uneven tire wear can be caused by improper inflation, suspension misalignment or damage, hard service, or wheel imbalance. For wheel and tire replacement and maintenance procedures, refer to para. 8-3.

For instructions on adjusting front wheel toe-in, refer to para. 8-9.

For instructions on adjusting rear wheel toe-out, refer to para. 8-10. Part C will test out the suspension parts to see if they are OK.

B
FROM 3,
Page 2-434

B1

KNOWN INFO

STRAIGHT LINE BEHAVIOR OK
BRAKES OK
HARD STEERING

POSSIBLE PROBLEMS

POWER STEERING PUMP
POWER STEERING COMPONENTS
SUSPENSION

IS THE SERPENTINE BELT IN GOOD CONDITION?

TEST OPTIONS

LOOK AT BELT TENSIONER POSITION.

REASON FOR QUESTION

If belt tensioner has fully retracted, the power steering unit will not work properly.

NO → ADJUST OR REPLACE BELTS.

YES

B2

KNOWN INFO

WHEELS AND TIRES OK
BRAKES OK
HARD STEERING
SERPENTINE BELT OK

POSSIBLE PROBLEMS

POWER STEERING PUMP
POWER STEERING COMPONENTS
SUSPENSION

IS THE FLUID LEVEL NORMAL IN THE POWER STEERING PUMP?

TEST OPTIONS

CHECK THE CAP/DIPSTICK FOR PROPER FLUID LEVEL.

REASON FOR QUESTION

Low fluid level may cause power steering pump to work improperly.

NO → ADD FLUID AND BLEED SYSTEM.

YES

B3

KNOWN INFO

WHEELS AND TIRES OK
BRAKES OK
HARD STEERING
SERPENTINE BELT OK
FLUID LEVEL OK

POSSIBLE PROBLEMS

POWER STEERING PUMP
POWER STEERING COMPONENTS
SUSPENSION

ARE THE POWER STEERING PUMP, PULLEY, AND BRACKET FIRMLY ATTACHED AND IN GOOD WORKING ORDER?

TEST OPTIONS

CHECK THEM.

REASON FOR QUESTION

Loose or broken power steering components could cause power steering assist to work improperly.

NO → REPAIR/REPLACE POWER STEERING COMPONENTS.

YES

GO TO B4,
Page 2-442

Check serpentine belt tensioner position.

CAUTION

Do not overfill hydraulic fluid.

See TM 9-2320-387-10 for fluid replacement procedure. For bleeding procedure, refer to para. 8-27.

Low fluid level could indicate a problem elsewhere in the system; either leaking hydraulic lines or a leaking or damaged power steering pump. If adding fluid seems to cure the problem, you should probably run the rest of the tests to make sure there aren't any other problems.

CAUTION

Serpentine belt failure (abnormal wear or belt dislodgement) can be caused by misalignment of pulleys, improper installation, or foreign objects introduced into belt path. Inspect water pump pulley for proper installation and ease of rotation. Any wobble or misalignment will cause belt failure. Refer to para. 3-81 for pulley alignment procedures.
A loose pump, pulley, or bracket could cause excess noise, slipping belt, or other malfunctions. For appropriate repair or replacement procedures, refer to para. 8-23.

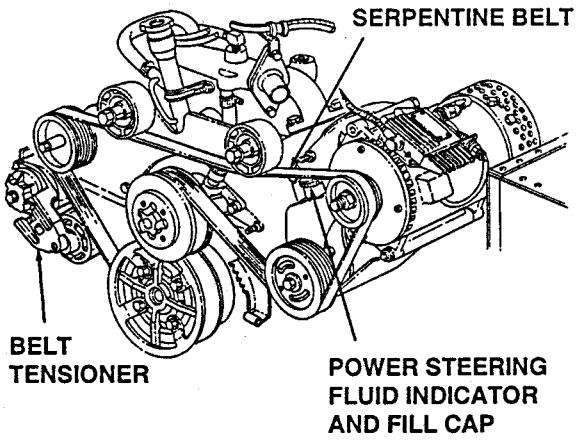

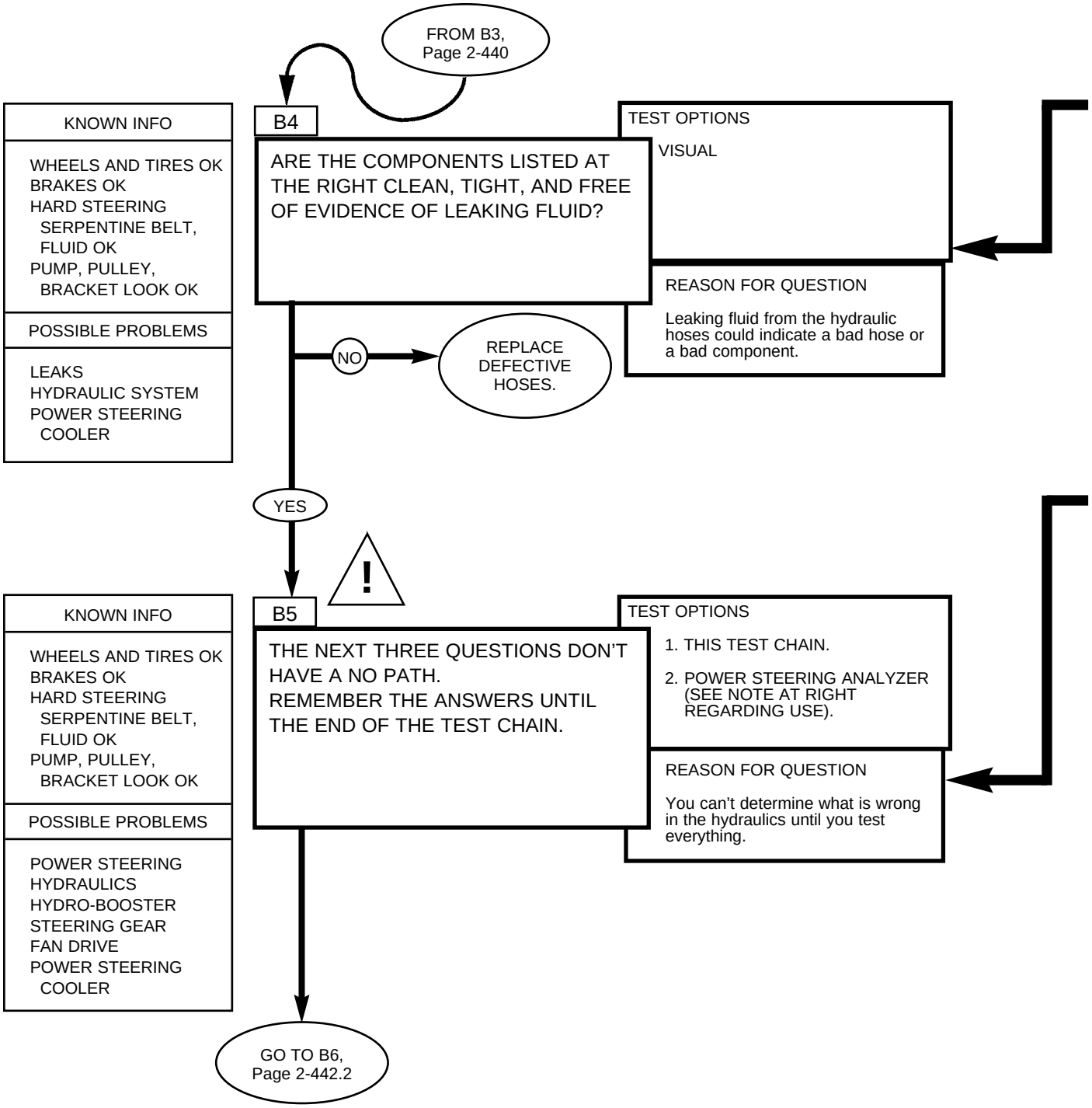
FROM B3,
Page 2-440
B4
ARE THE COMPONENTS LISTED AT THE RIGHT CLEAN, TIGHT, AND FREE OF EVIDENCE OF LEAKING FLUID?
KNOWN INFO
WHEELS AND TIRES OK
BRAKES OK
HARD STEERING
SERPENTINE BELT, FLUID OK
PUMP, PULLEY, BRACKET LOOK OK
POSSIBLE PROBLEMS
LEAKS
HYDRAULIC SYSTEM
POWER STEERING COOLER
TEST OPTIONS
VISUAL
REASON FOR QUESTION
Leaking fluid from the hydraulic hoses could indicate a bad hose or a bad component.
NO
REPLACE DEFECTIVE HOSES.
YES
!
B5
THE NEXT THREE QUESTIONS DON'T HAVE A NO PATH.
REMEMBER THE ANSWERS UNTIL THE END OF THE TEST CHAIN.
KNOWN INFO
WHEELS AND TIRES OK
BRAKES OK
HARD STEERING
SERPENTINE BELT, FLUID OK
PUMP, PULLEY, BRACKET LOOK OK
POSSIBLE PROBLEMS
POWER STEERING
HYDRAULICS
HYDRO-BOOSTER
STEERING GEAR
FAN DRIVE
POWER STEERING COOLER
TEST OPTIONS
1. THIS TEST CHAIN.
2. POWER STEERING ANALYZER (SEE NOTE AT RIGHT REGARDING USE).
REASON FOR QUESTION
You can't determine what is wrong in the hydraulics until you test everything.
GO TO B6,
Page 2-442.2

Check hydraulic hoses, power steering pump, power steering cooler, hydraulic control valve, hydro-booster unit, steering gear, fan shroud, and fan clutch. See hose replacement procedures (refer to para 8-24). Check power steering cooler for bent fins or any other airflow restrictions. Straighten fins or replace power steering cooler (para. 3-8) if damaged beyond repair.

1. With engine off, disconnect pressure hose from hydro-boost and connect tube and quick-disconnect to hydro-boost.

NOTE

Have drainage container ready to catch fluid.

2. Connect adapter and quick-disconnect to pressure hose.
3. Connect hose from valve on power steering analyzer to tube and quick-disconnect on hydro-boost.
4. Connect hose from gauge side of power steering analyzer to adapter and quick-disconnect on pressure hose.
5. Loosen hose clamp and remove cooler hose from return tube on steering gearbox.
6. Plug hose with plug or bolt (3/8 in. or 10 mm dia.) and secure with hose clamp.
7. Connect bypass hose to tube on steering gearbox and secure with hose clamp.

(continued on page 2-443)

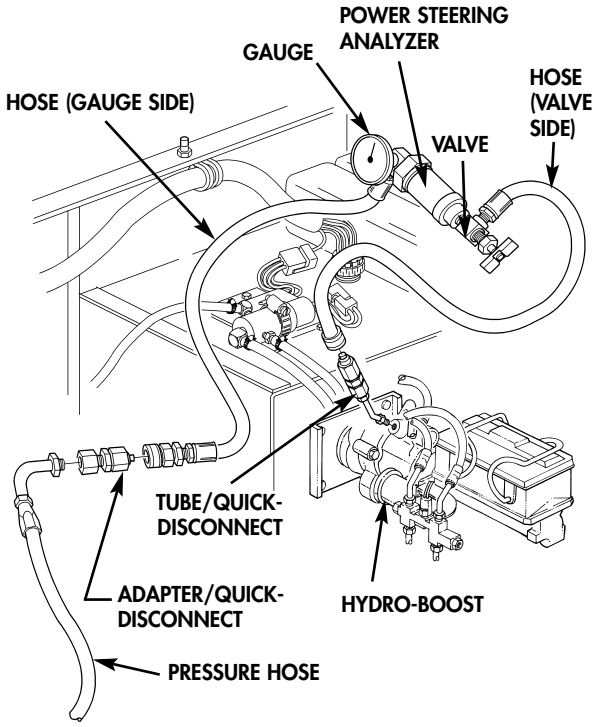

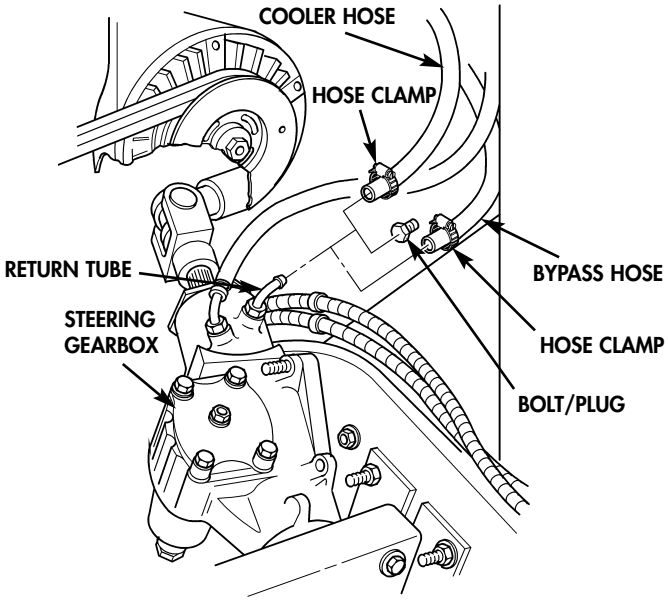

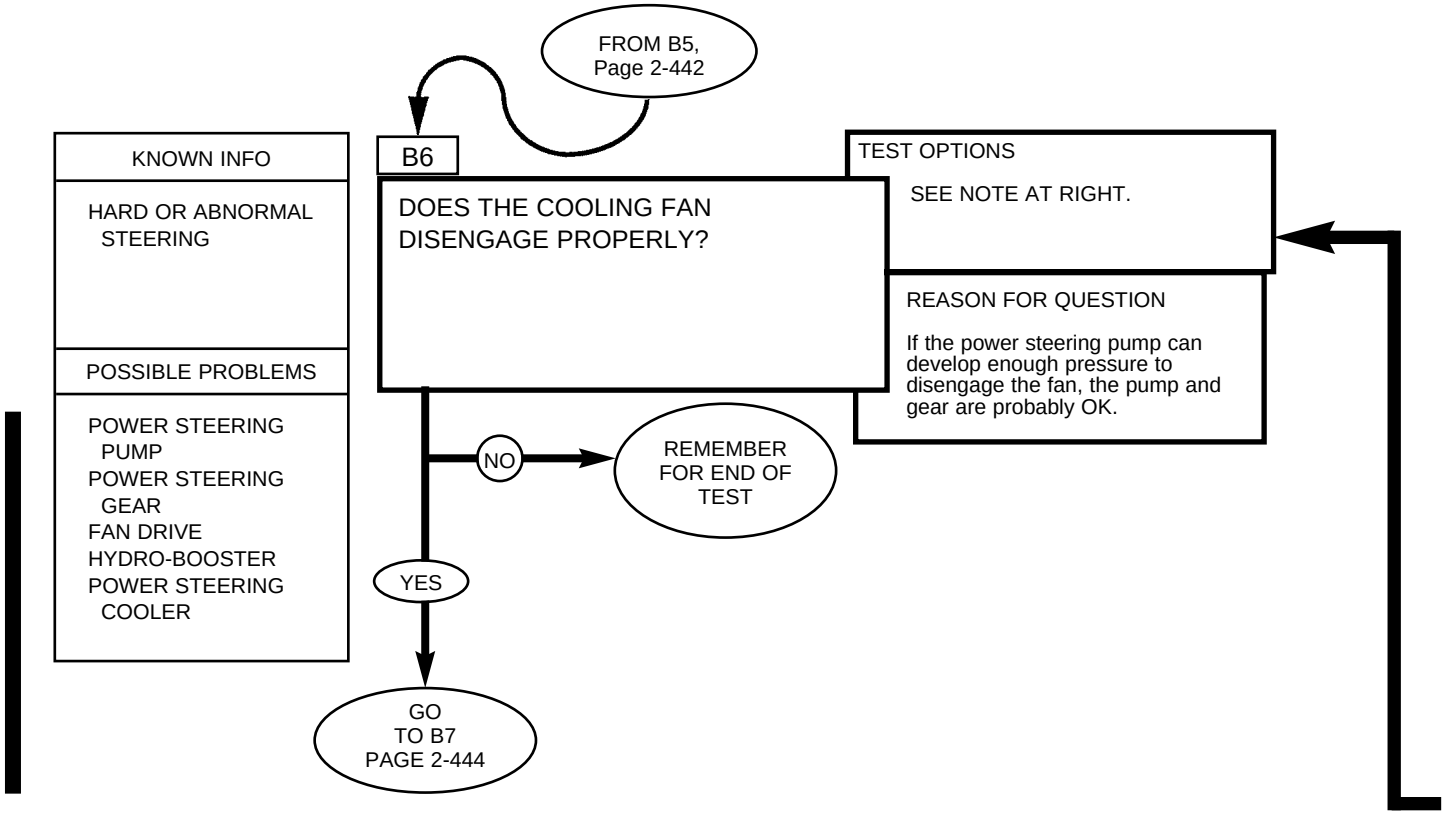
FROM B5,
Page 2-442
KNOWN INFO
HARD OR ABNORMAL STEERING
POSSIBLE PROBLEMS
POWER STEERING PUMP
POWER STEERING GEAR
FAN DRIVE
HYDRO-BOOSTER
POWER STEERING COOLER
B6
DOES THE COOLING FAN DISENGAGE PROPERLY?
TEST OPTIONS
SEE NOTE AT RIGHT.
REASON FOR QUESTION
If the power steering pump can develop enough pressure to disengage the fan, the pump and gear are probably OK.
NO
REMEMBER FOR END OF TEST
YES
GO TO B7 PAGE 2-444

8. Loosen hose clamp and remove control valve return hose from tube on power steering pump.
9. Plug return hose with plug or bolt (3/8 in. or 10 mm dia.) and secure with hose clamp.
10. Connect other end of bypass hose to tube on power steering pump and secure with hose clamp.
11. Connect STE/ICE-R to vehicle diagnostic connector and set for measuring RPM (para. 2-46).
12. Open analyzer valve to full open position.
13. Start engine (Refer to TM 9-2320-387-10).
14. Remove power steering reservoir cap and turn steering wheel all the way left, hold in place for 5 seconds, then repeat process with steering wheel all the way right. This releases air from the system.
15. Return steering wheel to center position and shut engine off (para. 3-45).
16. Check and add power steering fluid to reach FULL COLD level in reservoir (Refer to TM 9-2320-387-10).
17. Start engine (Refer to TM 9-2320-387-10) and allow engine to idle and reach operating temperature of 190° F to 230° F.
18. Check for proper engine idle speeds and adjust if necessary (para. 3-45).

6.5L engine	700±25 RPM
6.5L detuned engine	700±25 RPM

19. Ensure analyzer valve is in full open position and engine is at proper idle speed.

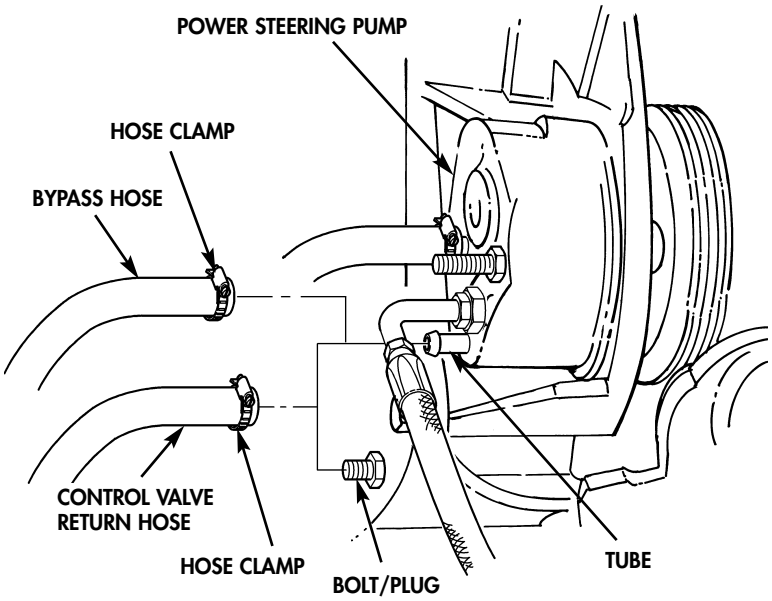

20. Initial pressure should be 150-250 psi and a flow of 2.50-3.50 gpm. If these specifications aren't present, check installation of analyzer and check power steering system (Refer to TM 9-2320-387-10).
21. With power steering system working properly, partially close analyzer valve until pressure reaches 700 psi. If flow rate varies more than 1 gpm from the initial reading, replace power steering pump (para. 8-23).

CAUTION

Do not leave analyzer valve fully closed for more than 5 seconds. Severe damage may occur to power steering pump.

22. With engine at idle, close and open analyzer valve three times, recording pressure each time. All readings should be 1300 psi or higher, if pressure is lower, replace power steering pump (para. 8-23).
23. With analyzer valve in the open position, increase engine rpm to 1500 and record fluid flow. If fluid flow varies more than 1 gpm from initial reading, replace power steering pump (para. 8-23).
24. With engine at idle, turn steering wheel all the way left, hold in place for 5 seconds, then repeat process with steering wheel all the way right and record flow rates. If flow rate does not drop to 1 gpm or less, replace steering gearbox (para. 8-20).
25. With engine at idle, turn wheels slightly left and right and release quickly. If pressure does not increase and snap back within 2 seconds, check steering shaft and column for binding and repeat step 15. If pressure still does not increase and snap back, replace steering gearbox (para. 8-20).
26. With engine at idle, push brake pedal down and hold. Record pressure. If pressure varies more than 50 psi from step 22, replace hydro-boost (para. 7-6).
27. With engine at idle, push brake pedal down and release quickly. If pressure does not increase and snap back within 2 seconds, replace hydro-boost (para. 7-6).
28. Shut off engine. Remove power steering analyzer and restore power steering system to original configuration.
29. Bleed power steering system (para. 8-27).

NOTE

You must be certain that the engine cooling system is working ok, or this test won't tell you anything. If the engine is cold, and everything is working ok, the fan should be disengaged. You can tell by gently revving the engine in neutral with the hood open. If the fan is engaged you will feel a breeze outside the driver's door. If it's disengaged, you won't feel it. If you aren't sure if it's working ok, run the tests in Paragraph 2-31.

STEERING SYSTEM

DIAGNOSTIC FLOWCHART

FROM B6, Page 2-442.2

KNOWN INFO

HARD OR ABNORMAL STEERING

POSSIBLE PROBLEMS

POWER STEERING PUMP
POWER STEERING GEAR
FAN DRIVE
HYDRO-BOOSTER

B7

IS THE HYDRO-BOOSTER WORKING PROPERLY?

TEST OPTIONS

SEE PROCEDURES AT RIGHT.

REASON FOR QUESTION

The hydro-booster will affect the operation of the steering system.

NO → REMEMBER FOR END OF TEST.

YES

KNOWN INFO

HARD OR ABNORMAL STEERING

POSSIBLE PROBLEMS

POWER STEERING PUMP
POWER STEERING GEAR
FAN DRIVE
HYDRO-BOOSTER

B8

TURN STEERING WHEEL SLIGHTLY TO LEFT OR RIGHT AND RELEASE WHEEL QUICKLY. THE STEERING WHEEL SHOULD CENTER ITSELF. DOES THIS HAPPEN?

TEST OPTIONS

TRY IT.

REASON FOR QUESTION

The steering gear is working properly if this happens.

NO → REMEMBER FOR END OF TEST.

YES

KNOWN INFO

HARD OR ABNORMAL STEERING

POSSIBLE PROBLEMS

POWER STEERING PUMP
POWER STEERING GEAR
FAN DRIVE
HYDRO-BOOSTER

B9

LOOK AT THE CHART TO THE RIGHT TO DETERMINE WHAT IS WRONG AND REPAIR IT AS DIRECTED.

Method for checking hydro-booster: Depress brake pedal several times to exhaust accumulator. Depress brake pedal and start engine. Brake pedal should fall and then push back against operator's foot.

ANSWERS TO QUESTION: B6	B7	B8	COMPONENT TO REPLACE
NO	NO	NO	POWER STEERING PUMP
NO	NO	YES	SEE NOTE BELOW
NO	YES	NO	SEE NOTE BELOW
NO	YES	YES	RUN ENGINE COOLING TEST (PARA. 2-25)
YES	NO	NO	POWER STEERING PUMP
YES	NO	YES	HYDRO-BOOSTER
YES	YES	NO	DS LEVEL (CHAPTER 14) STEERING GEAR
YES	YES	YES	NO FAULTS

NOTE

To diagnose the second and third cases to one item, it is necessary to have a power steering analyzer. Additionally, for all cases, check the hoses for the particular part to make sure they are OK.

STEERING SYSTEM

DIAGNOSTIC FLOWCHART

C
FROM 4, Page 2-436
OR A3, Page 2-438

C1

KNOWN INFO

WHEELS AND TIRES OK
BRAKES OK
ALIGNMENT OK

POSSIBLE PROBLEMS

STEERING COMPONENTS
SUSPENSION COMPONENTS

CHECK THE TIE ROD ENDS, CENTER LINK PITMAN ARM AND IDLER ARM, AND ALL OF THE MOUNTING HARDWARE FOR THESE PARTS. ARE THEY ALL OK?

TEST OPTIONS

VISUAL INSPECTION - LOOK FOR BENT PARTS, LOOSE MOUNTINGS AND BAD BUSHINGS.

REASON FOR QUESTION

These are the parts that turn the front wheels in response to the steering wheel movements.

NO → REPLACE AS NEEDED.

YES ↓

C2

KNOWN INFO

WHEELS AND TIRES OK
BRAKES OK
STEERING LINKAGES OK

POSSIBLE PROBLEMS

SERPENTINE BELT & PULLEY
CAPSCREWS
SUSPENSION COMPONENTS

CHECK POWER STEERING DRIVEBELT PULLEY FOR GROOVES AND SCORING, AND MAKE SURE BELT TENSIONER POSITION INDICATES SERPENTINE BELT IS OK. ARE THESE OK?

TEST OPTIONS

VISUAL INSPECTION OF PULLEY AND BELT TENSIONER.

REASON FOR QUESTION

A damaged pulley will ruin the serpentine belt. A damaged serpentine belt will slip, causing the power steering to loose power or fail.

NO → REPLACE DAMAGED/WORN BELT OR PULLEY.

YES ↓

C3

KNOWN INFO

WHEELS AND TIRES OK
BRAKES OK
SERPENTINE BELT OK
STEERING LINKAGES OK

POSSIBLE PROBLEMS

BALL JOINTS
OTHER SUSPENSION COMPONENTS
OTHER STEERING COMPONENTS

ARE THE BALL JOINTS OK (NOT WORN)?

TEST OPTIONS

SEE PROCEDURE AT RIGHT.

REASON FOR QUESTION

Worn ball joints can result in difficult or noisy steering.

NO → REPLACE BALL JOINTS.

YES ↓

GO TO C4,
Page 2-448

REFERENCE INFORMATION

STEERING SYSTEM

Check for looseness in idler arm and pitman arm (paras. 8-17 and 8-13). For replacing center link, refer to para. 8-14. For replacing tie rods, refer to para. 8-16.

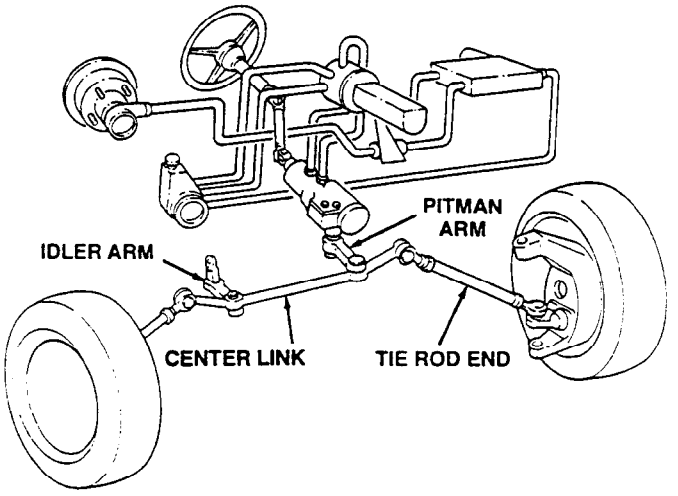

For replacing the pulley, refer to para. 8-23.

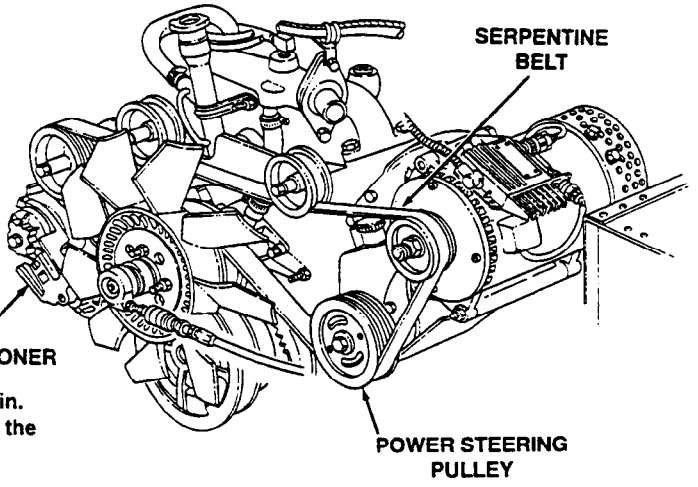

CAUTION

Do not loosen slotted nut to install cotter pin. Loosening the nut may result in damage to the equipment.

To check for proper operation of ball joints:

(1) Chock rear wheels front and back.
(2) Raise front wheels about 2 in. off the ground and support on a jack stand.
  a. For Lower Ball Joints
(3) Mark a line across the head of the top bolt holding the steering arm cover. Make sure the mark is parallel to the lower control arm.
(4) Put a prybar between the cover control arm and geared hub.
(5) Set a 6-in. ruler upright between the lower control arm and the marked screw.
(6) Push down the prybar to try to move the hub.
(7) Measure movement in the hub assembly. If movement is more than 1/8 in. (3 mm), replace lower ball joint (para. 6-24).
  b. For Upper Ball Joints
(8) Grasp top of tire and attempt to move it IN and OUT.
(9) Grasp upper control arm and attempt to move it up and down.
(10) If there is any noticeable movement between geared hub and upper control arm, replace upper ball joint (para. 6-23).

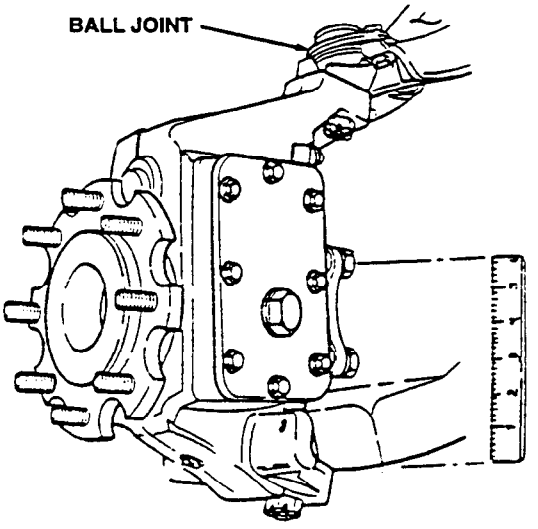

FROM C3, Page 2-446

C4

KNOWN INFO

WHEELS AND TIRES OK
BRAKES OK
POWER STEERING SYSTEM OK
BALL JOINTS OK

POSSIBLE PROBLEMS

OTHER SUSPENSION COMPONENTS
OTHER STEERING COMPONENTS

ARE THE CONTROL ARMS AND THEIR BUSHINGS OK?

TEST OPTIONS

VISUAL INSPECTION - LOOK FOR BROKEN OR WORN BUSHINGS AND BENT CONTROL ARMS. ALSO CHECK MOUNTING HARDWARE.

REASON FOR QUESTION

Worn control arms reduce steerability of the vehicle and reduce tire life.

NO → REPLACE CONTROL ARMS/BUSHINGS.

YES ↓

C5

KNOWN INFO

WHEELS AND TIRES OK
BRAKES OK
POWER STEERING SYSTEM OK
BALL JOINTS OK
CONTROL ARMS OK

POSSIBLE PROBLEMS

OTHER SUSPENSION COMPONENTS
OTHER STEERING COMPONENTS

ARE THE SHOCK ABSORBERS AND COIL SPRINGS OPERATING EFFECTIVELY?

TEST OPTIONS

SEE PROCEDURE AT RIGHT.

REASON FOR QUESTION

Broken or fatigued shock absorbers and coils can lead to loss of steering control on rough surfaces.

NO → REPLACE SHOCKS/ COIL SPRINGS.

YES ↓

C6

KNOWN INFO

WHEELS, TIRES, BRAKES OK
POWER STEERING SYSTEM OK
BALL JOINTS, CONTROL ARMS, SHOCKS/SPRINGS OK

POSSIBLE PROBLEMS

OTHER SUSPENSION COMPONENTS
OTHER STEERING COMPONENTS

ARE THE RADIUS RODS OK (NOT WORN OUT)?

TEST OPTIONS

VISUAL INSPECTION - CHECK FOR EXCESSIVE WEAR, UNSERVICEABLE BUSHINGS.

REASON FOR QUESTION

The radius rods serve to keep the rear wheels pointed in the proper direction.

NO → REPLACE RADIUS ROD.

YES ↓

GO TO C7, Page 2-450

For upper and lower control arm and bushing replacement instructions, refer to paras. 6-25 and 6-26.

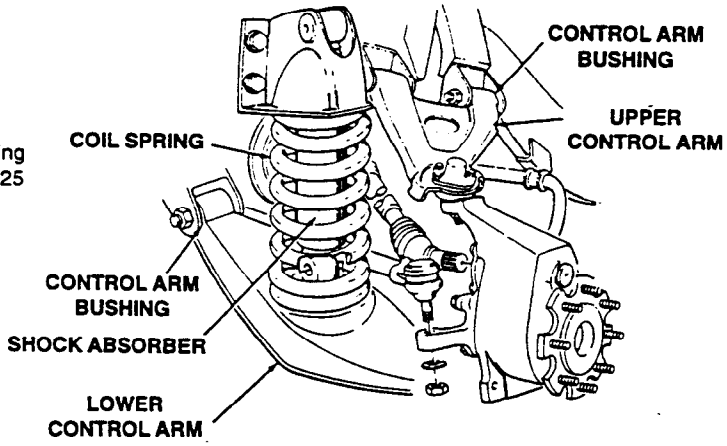

To test the shocks and springs, drive the vehicle over a variety of terrain. If the vehicle continues to bounce after hitting a bump, the shocks may be worn. If the vehicle bottoms out on the suspension, the shocks may be worn. If the vehicle sags when loaded, the springs may be worn. If the shock absorber bodies are not warm after driving the vehicle, the shocks are no good.

For coil spring and shock absorber replacement instructions, refer to paras. 6-27 and 6-28.

For instructions on replacing the radius rod, refer to para. 6-22.

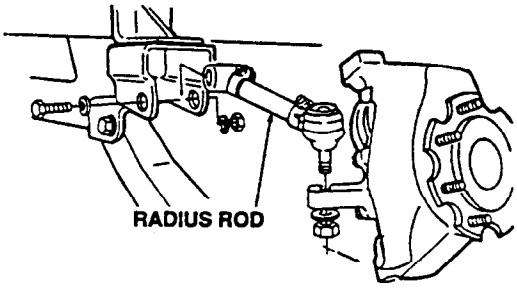

STEERING SYSTEM

DIAGNOSTIC FLOWCHART

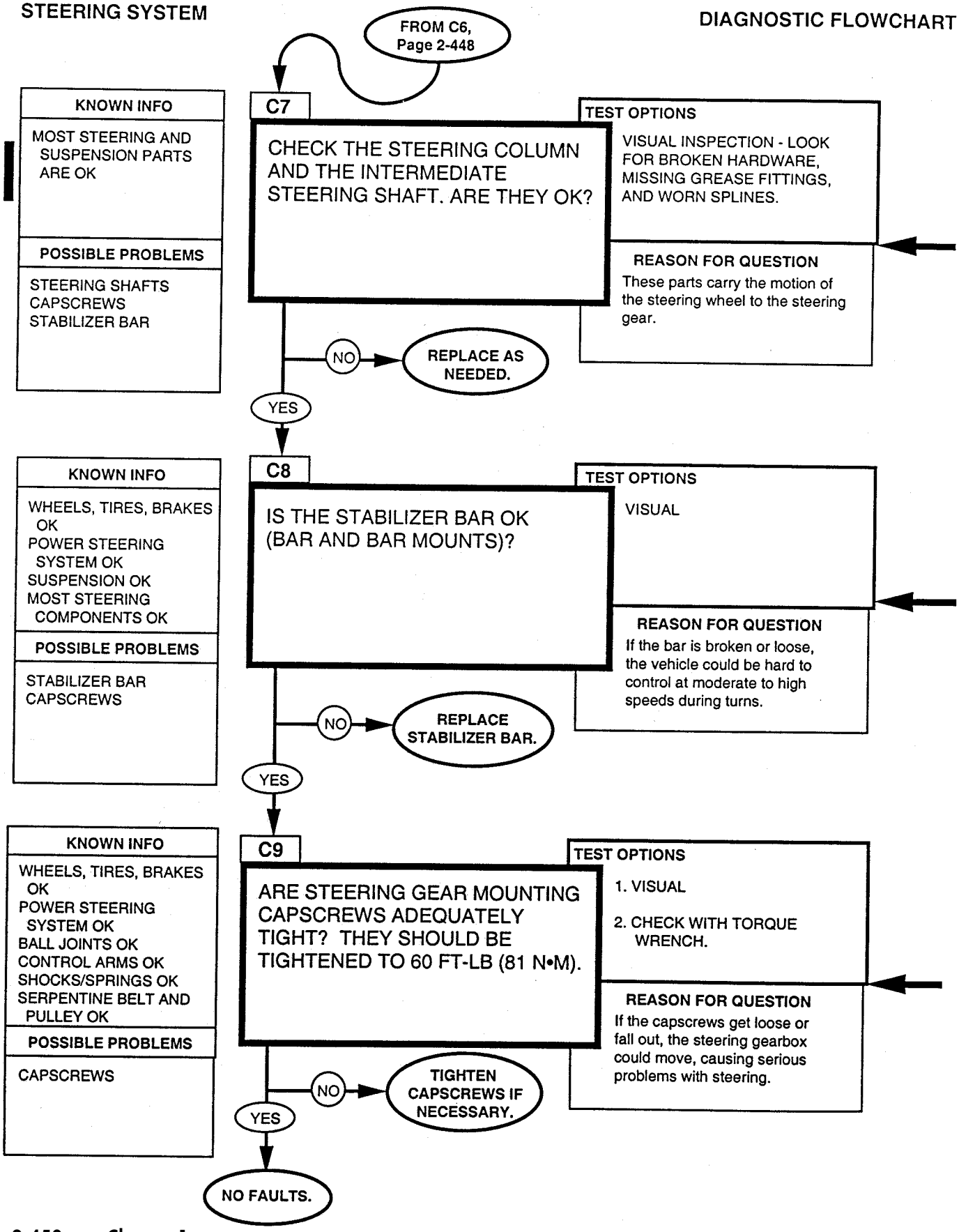

NOTE

Inspect intermediate shaft U-joints for wear, binding, or missing/damaged grease fittings. Replace or lubricate as necessary. Refer to (para. 8-21) for replacement and TM 9-2320-387-10, Appendix G, for lubrication instructions.

Replace the steering column and intermediate shaft (paras. 8-18 and 8-19).

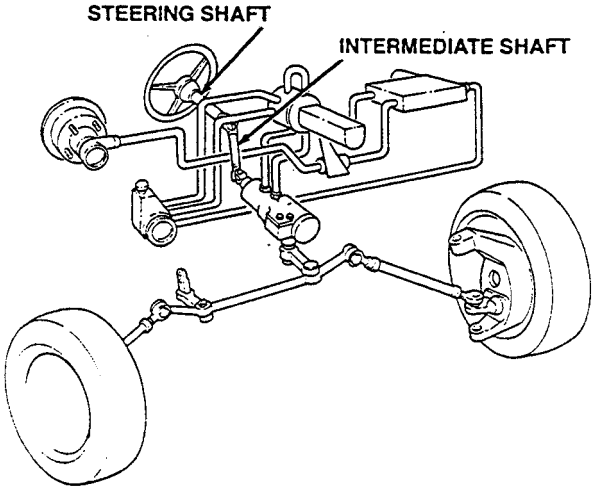

Replace the stabilizer bar (para. 6-20).

If you still have a problem, rerun the test chain to make sure you didn't miss anything. If you didn't go down the A chain, you may want to run those tests in order to check out the hydraulic parts of the steering system.

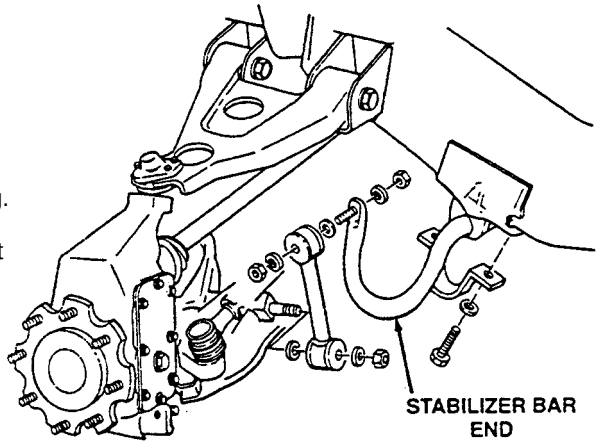

2-43. DRIVETRAIN TESTS

These drivetrain tests may be run any time you think you have a drivetrain problem or if you were sent here by another test chain. Just follow the path, answering the questions. Additional information and notes are given on the facing page when necessary.

The fold-out page shows the location of the major components of the drivetrain system in case you are not familiar with them.

Fold-out page FP-27 may be left open for reference while testing. Also, due to the design of the functional flow diagram, it is not necessary to have a location of parts diagram so it has been omitted.

NOTE

Problems with the transmission and drivetrain cooling system are dealt with in para. 2-40.

START

1

KNOWN INFO

NOTHING

POSSIBLE PROBLEMS

TRANSFER CASE
DIFFERENTIALS
HALF AND PROPELLER SHAFTS
CV AND U-JOINTS
GEARED HUBS

IS THE TRANSMISSION FLUID OK?

TEST OPTIONS

VISUAL - SEE NOTE AT RIGHT.

REASON FOR QUESTION

The transfer case shares its fluid with the transmission system.

NO → SEE NOTE AT RIGHT.

YES ↓

2

KNOWN INFO

FLUID OK

POSSIBLE PROBLEMS

TRANSFER CASE
DIFFERENTIALS
HALF AND PROPELLER SHAFTS
CV AND U-JOINTS
GEARED HUBS

ROAD-TEST THE VEHICLE. DOES IT PASS?

TEST OPTIONS

TRY ALL TRANSFER CASE OPTIONS AND NOTE UNUSUAL BEHAVIOR.

REASON FOR QUESTION

A road test is the best way to test the drivetrain.

NO → GO TO A, Page 2-460

YES ↓

3

KNOWN INFO

SHIFTER OK
FLUID OK
VEHICLE PASSES ROAD TEST

POSSIBLE PROBLEMS

TRANSFER CASE
DIFFERENTIALS
HALF AND PROPELLER SHAFTS
CV AND U-JOINTS
GEARED HUBS

DOES THE SPEEDOMETER WORK?

TEST OPTIONS

VISUAL

REASON FOR QUESTION

The speedometer is driven by the rear output shaft of the transfer case.

NO → GO TO C, Page 2-468

YES ↓

GO TO 4, Page 2-456

Procedure for checking transmission fluid

1. Start engine.
2. Hold down brake pedal and move transmission shift lever through all ranges including reverse.
3. Engage parking brake and place shift lever in neutral. Check fluid level on dipstick.
4. Proper level is between FULL and ADD marks on dipstick.

Check fluid for a burnt smell, grit, discoloration, air bubbles, or a milky appearance.

- Burnt smell, discoloration, or grit indicates worn or damaged internal components. Notify DS maintenance (chapter 14).
- Bubbles indicate of an overfilled system or air leaks in the system. Drain the fluid and refill to proper level (para. 5-2).
- Milky appearance is due to water in the system. Replace fluid and filter.

If the speedometer works but the vehicle doesn't move, the transmission is OK and the problem is in the final drive. Most likely the fault is in the splined output shafts of the transfer case. Listen for unusual noise.

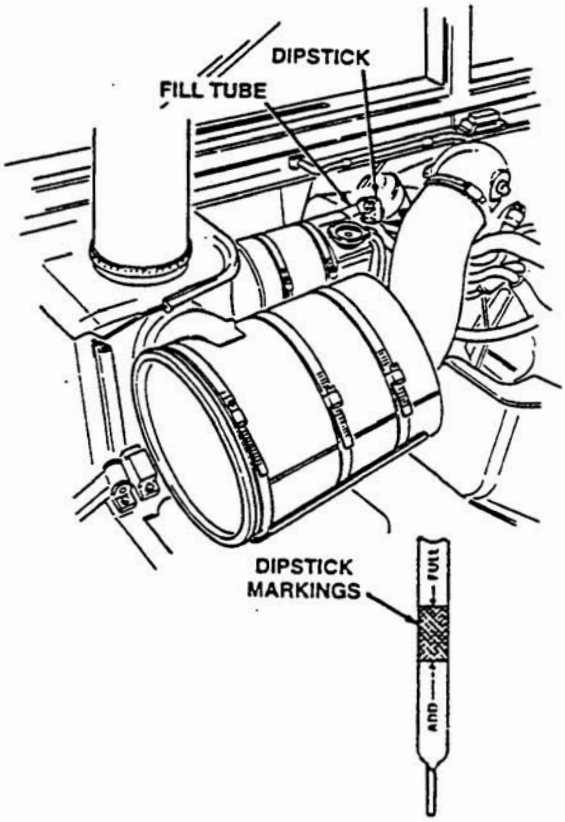

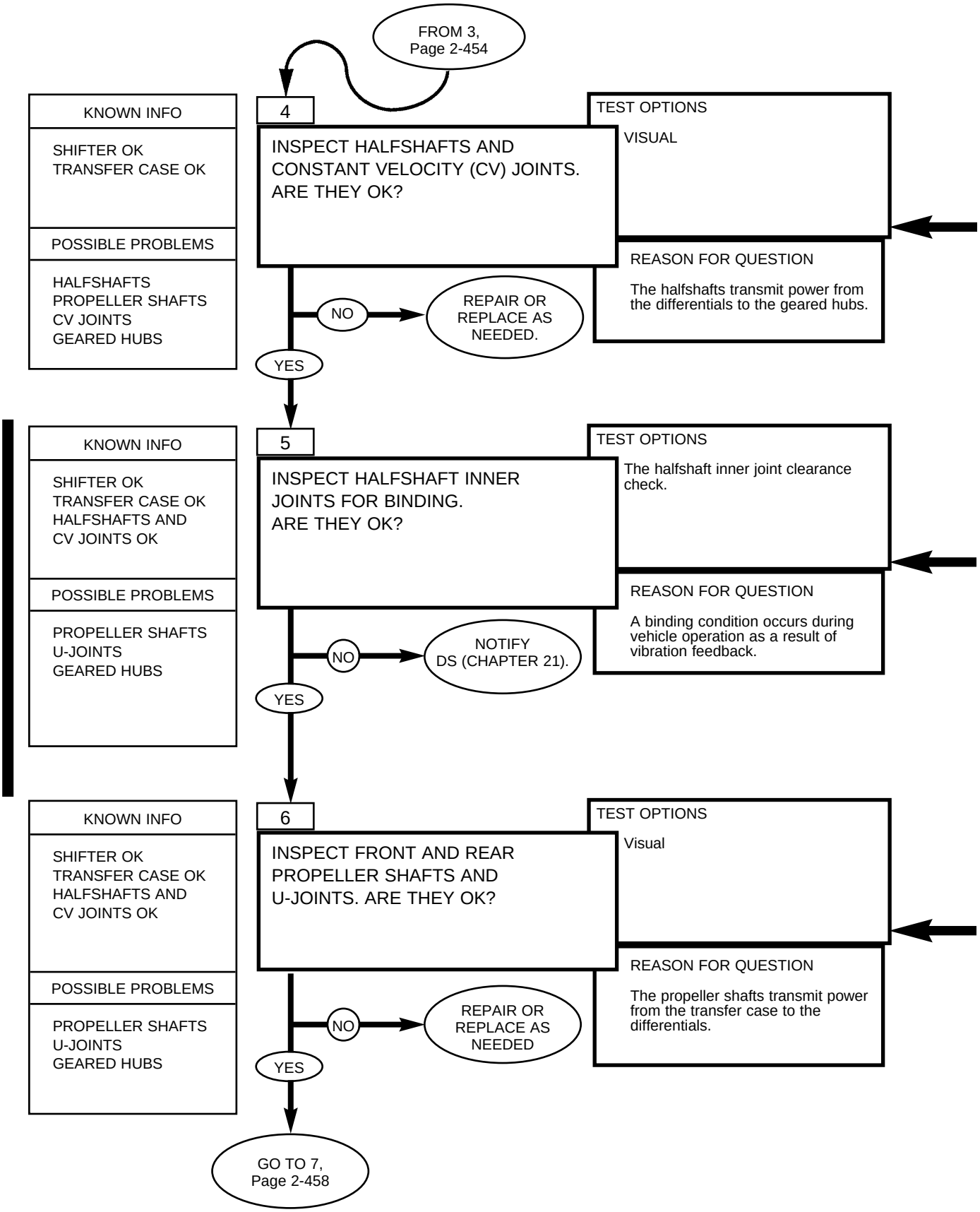
FROM 3, Page 2-454
KNOWN INFO
SHIFTER OK
TRANSFER CASE OK
POSSIBLE PROBLEMS
HALFSHAFTS
PROPELLER SHAFTS
CV JOINTS
GEARED HUBS
4
INSPECT HALFSHAFTS AND CONSTANT VELOCITY (CV) JOINTS. ARE THEY OK?
TEST OPTIONS
VISUAL
REASON FOR QUESTION
The halfshafts transmit power from the differentials to the geared hubs.
NO
REPAIR OR REPLACE AS NEEDED.
YES
KNOWN INFO
SHIFTER OK
TRANSFER CASE OK
HALFSHAFTS AND CV JOINTS OK
POSSIBLE PROBLEMS
PROPELLER SHAFTS
U-JOINTS
GEARED HUBS
5
INSPECT HALFSHAFT INNER JOINTS FOR BINDING. ARE THEY OK?
TEST OPTIONS
The halfshaft inner joint clearance check.
REASON FOR QUESTION
A binding condition occurs during vehicle operation as a result of vibration feedback.
NO
NOTIFY DS (CHAPTER 21).
YES
KNOWN INFO
SHIFTER OK
TRANSFER CASE OK
HALFSHAFTS AND CV JOINTS OK
POSSIBLE PROBLEMS
PROPELLER SHAFTS
U-JOINTS
GEARED HUBS
6
INSPECT FRONT AND REAR PROPELLER SHAFTS AND U-JOINTS. ARE THEY OK?
TEST OPTIONS
Visual
REASON FOR QUESTION
The propeller shafts transmit power from the transfer case to the differentials.
NO
REPAIR OR REPLACE AS NEEDED
YES
GO TO 7, Page 2-458

Check for torn boots on the CV joints, stripped splines, smooth joint operation, and proper mounting torques.

Replace halfshafts and CV joints (para. 6-7).

Lubricate in accordance with TM 9-2320-387-10.

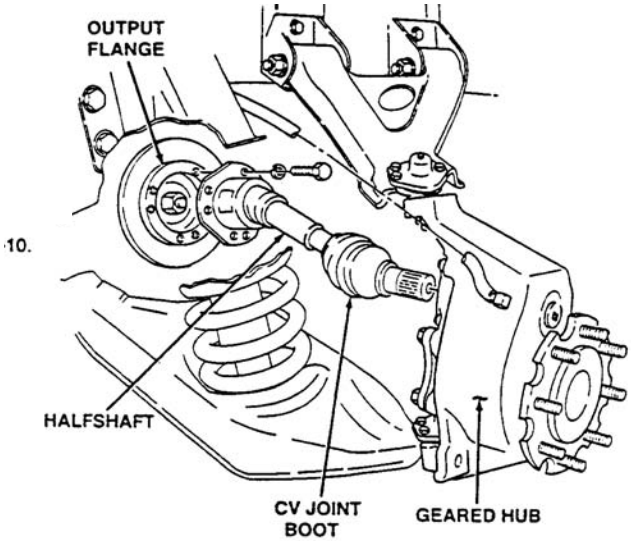

1. Perform front wheel toe-in alignment preliminary inspection (para. 8-9, task a.)
2. Raise and support front of vehicle (para. 8-2).
3. Rotate wheel by hand.

NOTE

If intermittent binding or resistance is felt during wheel rotation (six times per wheel revolution), differential alignment is required.

4. If no resistance is felt during rotation of wheel halfshaft axle and inner joint, rotate opposite wheel. If no resistance is present at either wheel, proceed to step 7.

NOTE

- **Record position at which resistance is felt.**
- **If an intermittent binding or resistance is felt during rotation of wheel, halfshaft axle shaft is contacting inner joint.**

5. Repeat steps 3 and 4 to determine serviceability for opposite wheel.
6. Notify DS maintenance (chapter 21) for front differential alignment.
7. Lower front of vehicle (page 8-2).

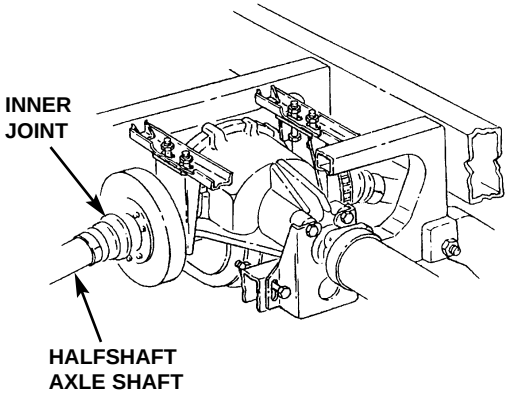

Check for smooth operation of U-joints, stripped splines, bent yokes, or other problems. Also check to see if the shaft itself is bent. Replace propeller shafts or U-joints (paras. 6-2 through 6-5).

Lubricate in accordance with TM 9-2320-387-10.

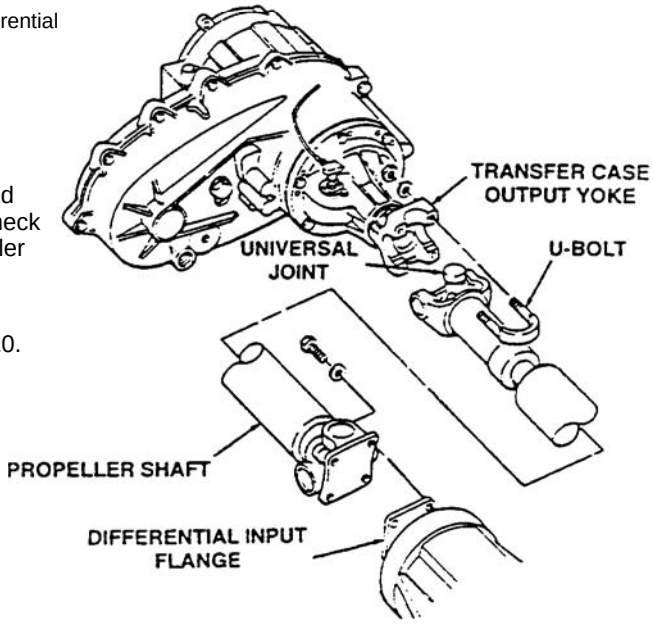

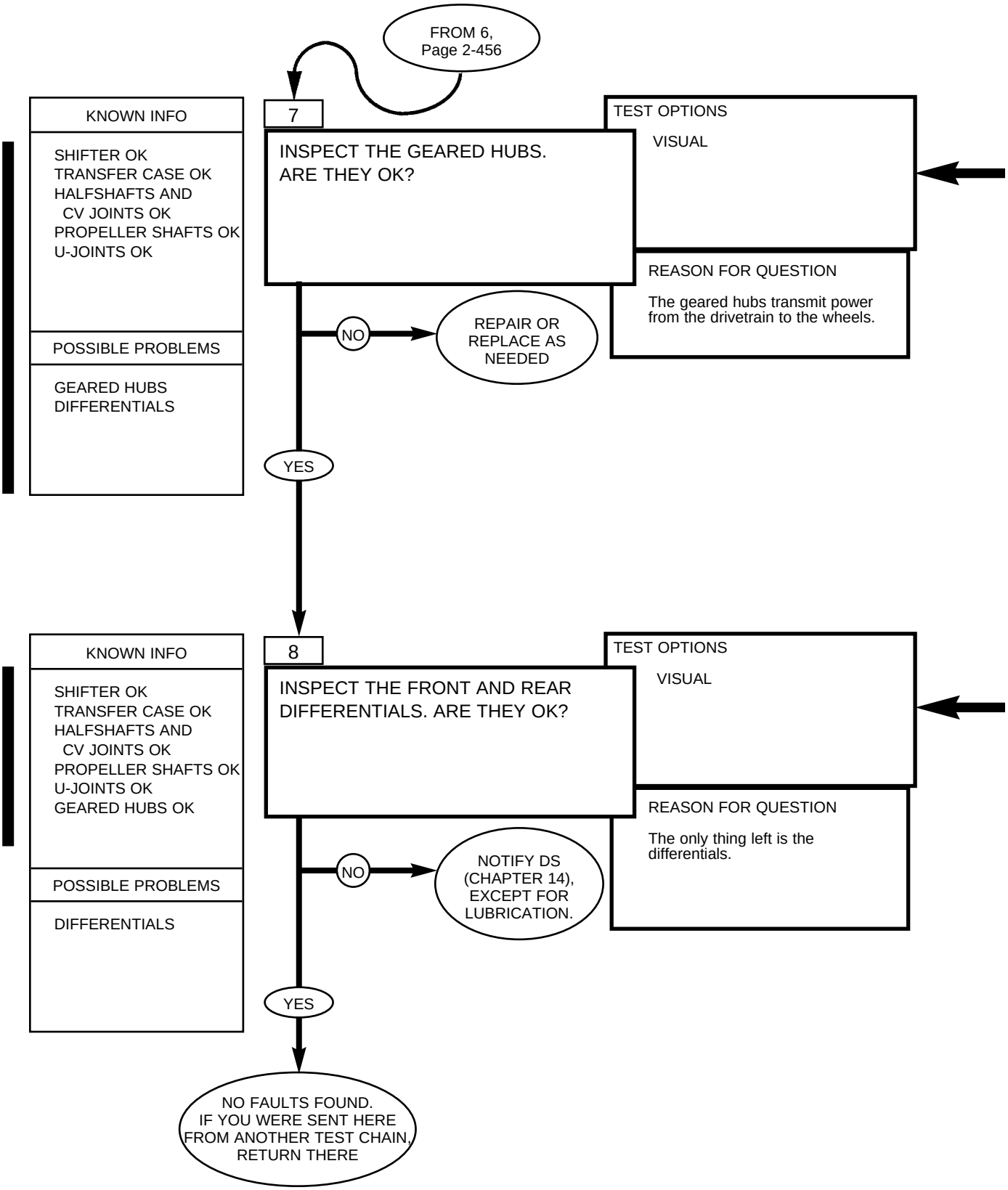
FROM 6,
Page 2-456
7
KNOWN INFO
SHIFTER OK
TRANSFER CASE OK
HALFSHAFTS AND
CV JOINTS OK
PROPELLER SHAFTS OK
U-JOINTS OK
POSSIBLE PROBLEMS
GEARED HUBS
DIFFERENTIALS
INSPECT THE GEARED HUBS.
ARE THEY OK?
TEST OPTIONS
VISUAL
REASON FOR QUESTION
The geared hubs transmit power from the drivetrain to the wheels.
NO
REPAIR OR REPLACE AS NEEDED
YES
8
KNOWN INFO
SHIFTER OK
TRANSFER CASE OK
HALFSHAFTS AND
CV JOINTS OK
PROPELLER SHAFTS OK
U-JOINTS OK
GEARED HUBS OK
POSSIBLE PROBLEMS
DIFFERENTIALS
INSPECT THE FRONT AND REAR DIFFERENTIALS. ARE THEY OK?
TEST OPTIONS
VISUAL
REASON FOR QUESTION
The only thing left is the differentials.
NO
NOTIFY DS (CHAPTER 14), EXCEPT FOR LUBRICATION.
YES
NO FAULTS FOUND.
IF YOU WERE SENT HERE FROM ANOTHER TEST CHAIN, RETURN THERE

Make sure the geared hubs turn freely.
Check mounting hardware for proper installation.

Lubricate in accordance with TM 9-2320-387-10.

Replace geared hubs (para. 6-9).

Check for loose mounting and broken parts.

Check fluid in accordance with
TM 9-2320-387-10.

Notify DS maintenance (chapter 14) for other faults.

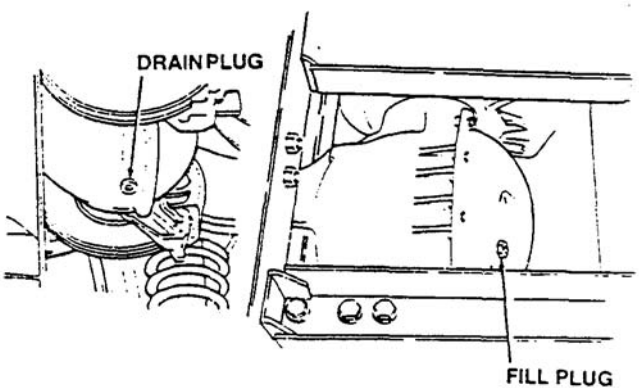

DRIVETRAIN **DIAGNOSTIC FLOWCHART**

A
FROM 2, Page 2-454

A1

KNOWN INFO

VEHICLE FAILS ROAD TEST
FLUID OK

POSSIBLE PROBLEMS

SHIFTER
PROPELLER SHAFTS
HALFSHAFTS
GEARED HUBS
TRANSMISSION
TRANSFER CASE

WITH THE VEHICLE OFF, HAVE AN ASSISTANT MOVE THE SELECTOR LEVER. DOES THE LINKAGE AT THE TRANSFER CASE WORK PROPERLY?

TEST OPTIONS

VISUAL

REASON FOR QUESTION

To make sure the shifter works.

NO → REPAIR SHIFTER AS NEEDED.

YES

A2

KNOWN INFO

VEHICLE FAILS ROAD TEST
FLUID OK
SHIFTER OK

POSSIBLE PROBLEMS

SHAFTS
GEARED HUBS
TRANSFER CASE
TRANSMISSION

DOES THE VEHICLE MOVE AT ALL?

TEST OPTIONS

VISUAL

REASON FOR QUESTION

If the vehicle doesn't move, it means the transmission or transfer case is probably at fault.

NO → GO TO B, Page 2-464

YES

A3

KNOWN INFO

VEHICLE FAILS ROAD TEST
FLUID OK
SHIFTER OK
VEHICLE MOVES

POSSIBLE PROBLEMS

SHAFTS
GEARED HUBS
TRANSFER CASE
TRANSMISSION

DOES THE TRANSMISSION WORK PROPERLY?

TEST OPTIONS

TRY TO FEEL IF THE TRANSMISSION IS SHIFTING PROPERLY, OR GO TO TRANSMISSION, PAGE 2-385.

REASON FOR QUESTION

A road-test failure could be due to the transmission.

NO → GO TO TRANSMISSION, Page 2-385

YES → GO TO A4, Page 2-462

REFERENCE INFORMATION

DRIVETRAIN

Lubricate in accordance with table 2-1.

Adjust and repair linkage (para. 5-8 or 5-9). Make sure the detents in the shifter correspond with the positions on the name plate.

If difficulty occurs when shifting transfer range with engine running, perform Engine Idle Speed Adjustment prior to troubleshooting drivetrain.

If engine was turned OFF in order to shift transfer to desired range, notify DS maintenance (chapter 14).

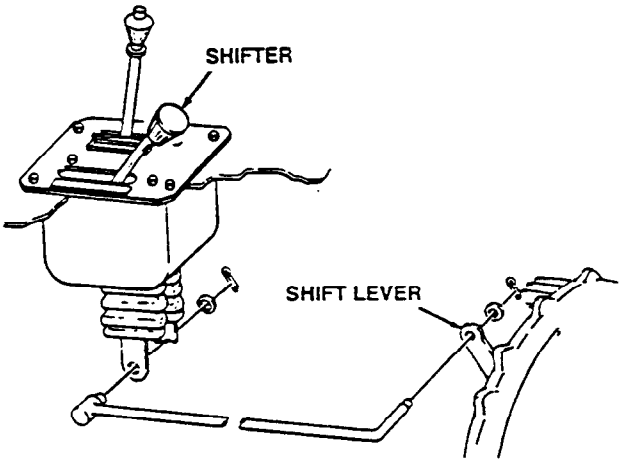

For the vehicle not to move, there must be a major problem in the drivetrain.

If you've already run the transmission tests and you still can't find the problem, continue down this test chain.

FROM A3, Page 2-460

A4

ARE BOTH PROPELLER SHAFTS AND U-JOINTS OK?

KNOWN INFO

VEHICLE FAILS ROAD TEST
FLUID OK
SHIFTER OK
VEHICLE MOVES

POSSIBLE PROBLEMS

DIFFERENTIALS
SHAFTS
GEARED HUBS
TRANSFER CASE

TEST OPTIONS

VISUAL

REASON FOR QUESTION

The propeller shafts transmit power to the differentials.

NO → REPLACE AS NEEDED.

YES

A5

ARE ALL 4 HALFSHAFTS AND CONSTANT VELOCITY JOINTS OK?

KNOWN INFO

VEHICLE FAILS ROAD TEST
FLUID OK
SHIFTER OK
VEHICLE MOVES
PROPELLER SHAFTS OK

POSSIBLE PROBLEMS

DIFFERENTIALS
HALFSHAFTS
GEARED HUBS
TRANSFER CASE

TEST OPTIONS

VISUAL

REASON FOR QUESTION

Halfshafts transmit power from the differentials to the geared hubs.

NO → REPLACE AS NEEDED.

YES

A6

INSPECT THE GEARED HUBS. ARE THEY OK?

KNOWN INFO

VEHICLE FAILS ROAD TEST
FLUID OK
SHIFTER OK
VEHICLE MOVES
PROPELLER SHAFTS OK
HALFSHAFTS OK

POSSIBLE PROBLEMS

DIFFERENTIALS
GEARED HUBS
TRANSFER CASE

TEST OPTIONS

VISUAL

REASON FOR QUESTION

The geared hubs transmit power from the drivetrain to the wheels.

NO → REPLACE AS NEEDED.

YES → SEE NOTE AT RIGHT.

REFERENCE INFORMATION

Lubricate in accordance with TM 9-2320-387-10.

Check for smooth operation of U-Joints, stripped splines, bent yokes, or other problems. Also check to see if the shaft itself is bent.

Repair and replace propeller shafts and U-joints (para. 6-2 through 6-4).

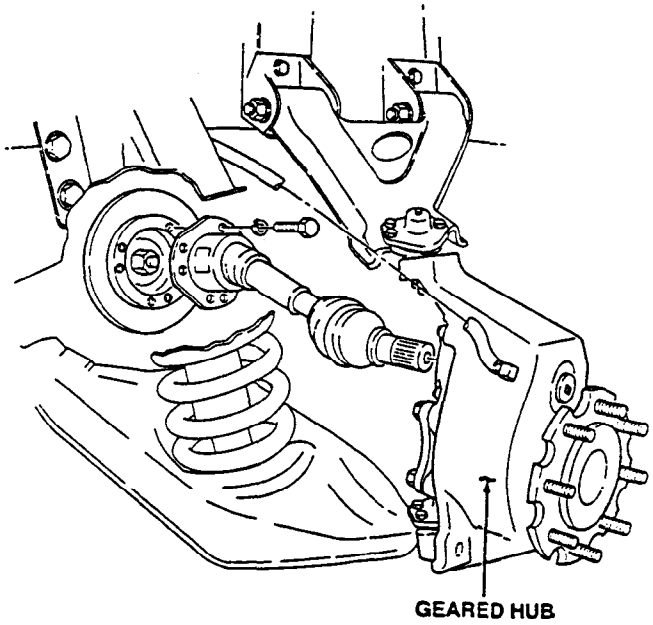

Check for torn boots on the CV joints, stripped splines, smooth joint operation, and proper mounting torques.

For halfshaft maintenance procedures, refer to para. 6-7.

Lubricate in accordance with TM 9-2320-387-10.

Make sure the geared hubs turn freely. Check mounting hardware for proper installation.

Lubricate in accordance with TM 9-2320-387-10.

If you haven't found any faults, check the differential fluid in accordance with TM 9-2320-387-10. Otherwise, notify DS maintenance (chapter 14).

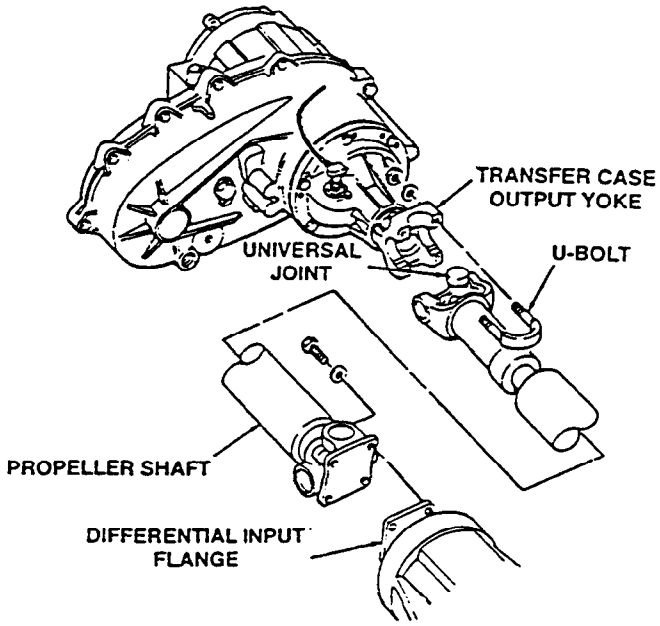

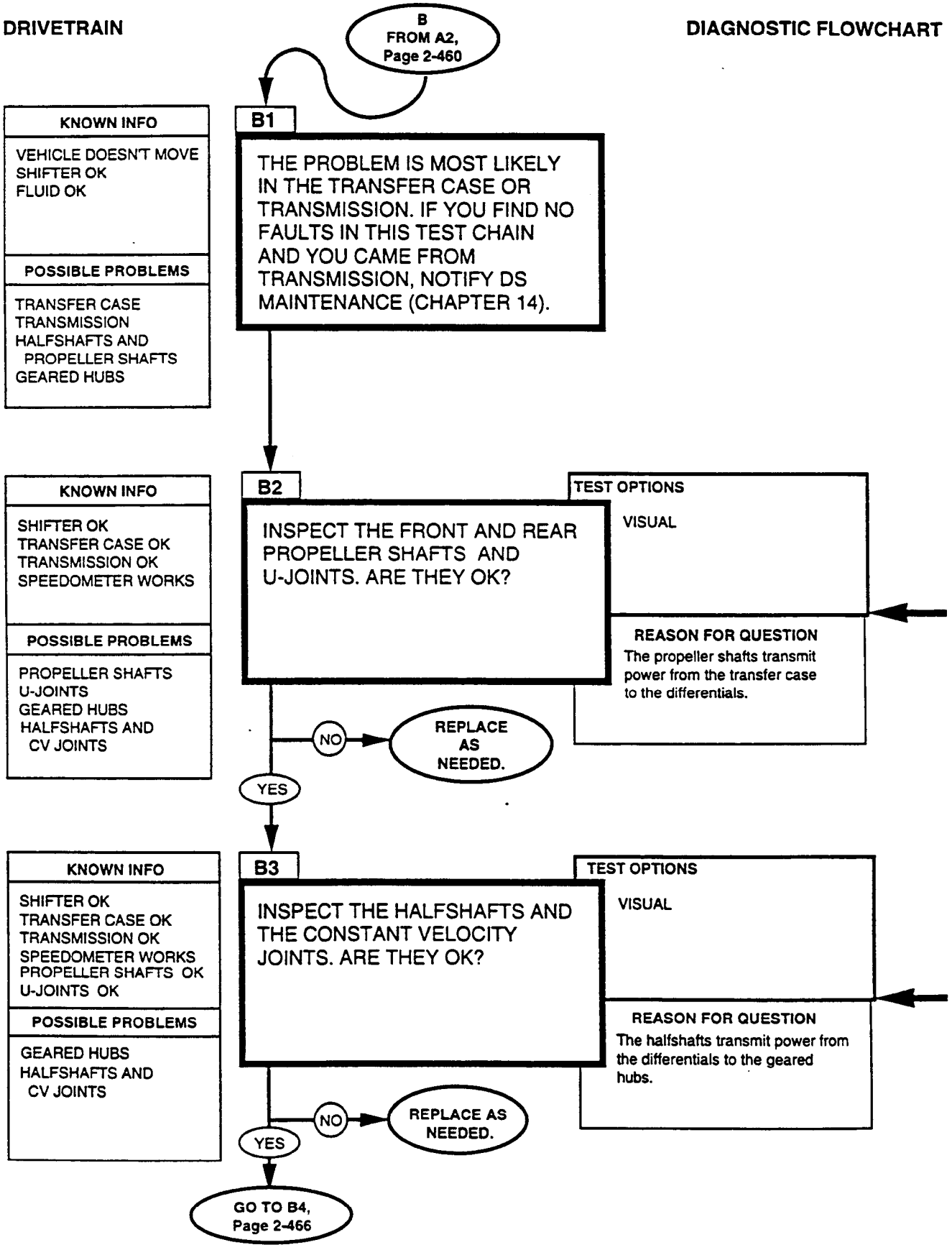
B
FROM A2,
Page 2-460
KNOWN INFO
VEHICLE DOESN'T MOVE
SHIFTER OK
FLUID OK
POSSIBLE PROBLEMS
TRANSFER CASE
TRANSMISSION
HALFSHAFTS AND
PROPELLER SHAFTS
GEARED HUBS
B1
THE PROBLEM IS MOST LIKELY IN THE TRANSFER CASE OR TRANSMISSION. IF YOU FIND NO FAULTS IN THIS TEST CHAIN AND YOU CAME FROM TRANSMISSION, NOTIFY DS MAINTENANCE (CHAPTER 14).
KNOWN INFO
SHIFTER OK
TRANSFER CASE OK
TRANSMISSION OK
SPEEDOMETER WORKS
POSSIBLE PROBLEMS
PROPELLER SHAFTS
U-JOINTS
GEARED HUBS
HALFSHAFTS AND
CV JOINTS
B2
INSPECT THE FRONT AND REAR PROPELLER SHAFTS AND U-JOINTS. ARE THEY OK?
TEST OPTIONS
VISUAL
REASON FOR QUESTION
The propeller shafts transmit power from the transfer case to the differentials.
NO
REPLACE AS NEEDED.
YES
KNOWN INFO
SHIFTER OK
TRANSFER CASE OK
TRANSMISSION OK
SPEEDOMETER WORKS
PROPELLER SHAFTS OK
U-JOINTS OK
POSSIBLE PROBLEMS
GEARED HUBS
HALFSHAFTS AND
CV JOINTS
B3
INSPECT THE HALFSHAFTS AND THE CONSTANT VELOCITY JOINTS. ARE THEY OK?
TEST OPTIONS
VISUAL
REASON FOR QUESTION
The halfshafts transmit power from the differentials to the geared hubs.
NO
REPLACE AS NEEDED.
YES
GO TO B4,
Page 2-466

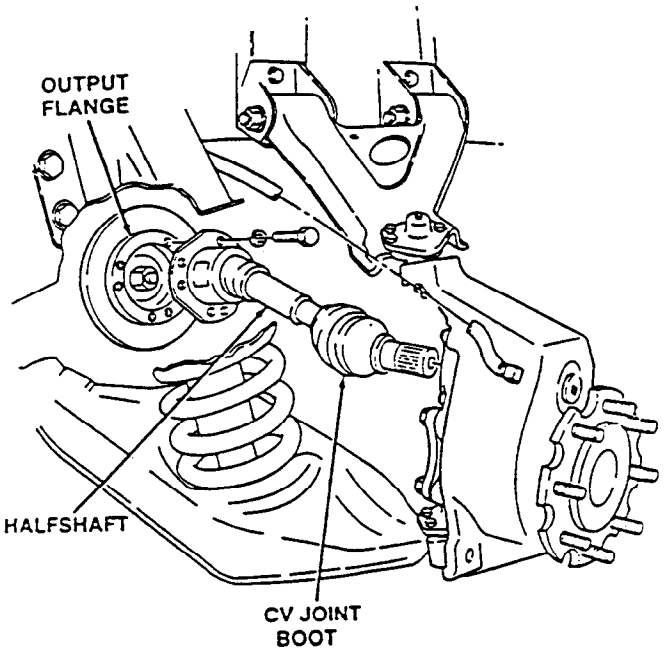

If the vehicle doesn't work, both shafts would have to be broken.

Check for smooth operation of U-joints, stripped splines, bent yokes, or other problems.

Also check to see if the shaft itself is bent.

Replace propeller shafts (paras. 6-2 through 6-4).

Lubricate in accordance with TM 9-2320-387-10.

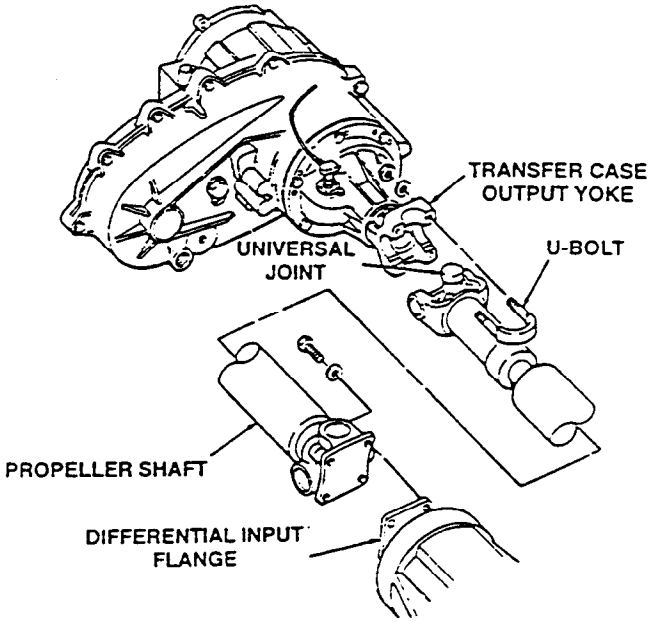

If the vehicle doesn't move, all four shafts may be broken. Check for torn boots on the CV joints, stripped splines, smooth joint operation, and proper mounting torques.

For halfshaft maintenance procedures, refer to para. 6-7.

Lubricate in accordance with TM 9-2320-387-10.

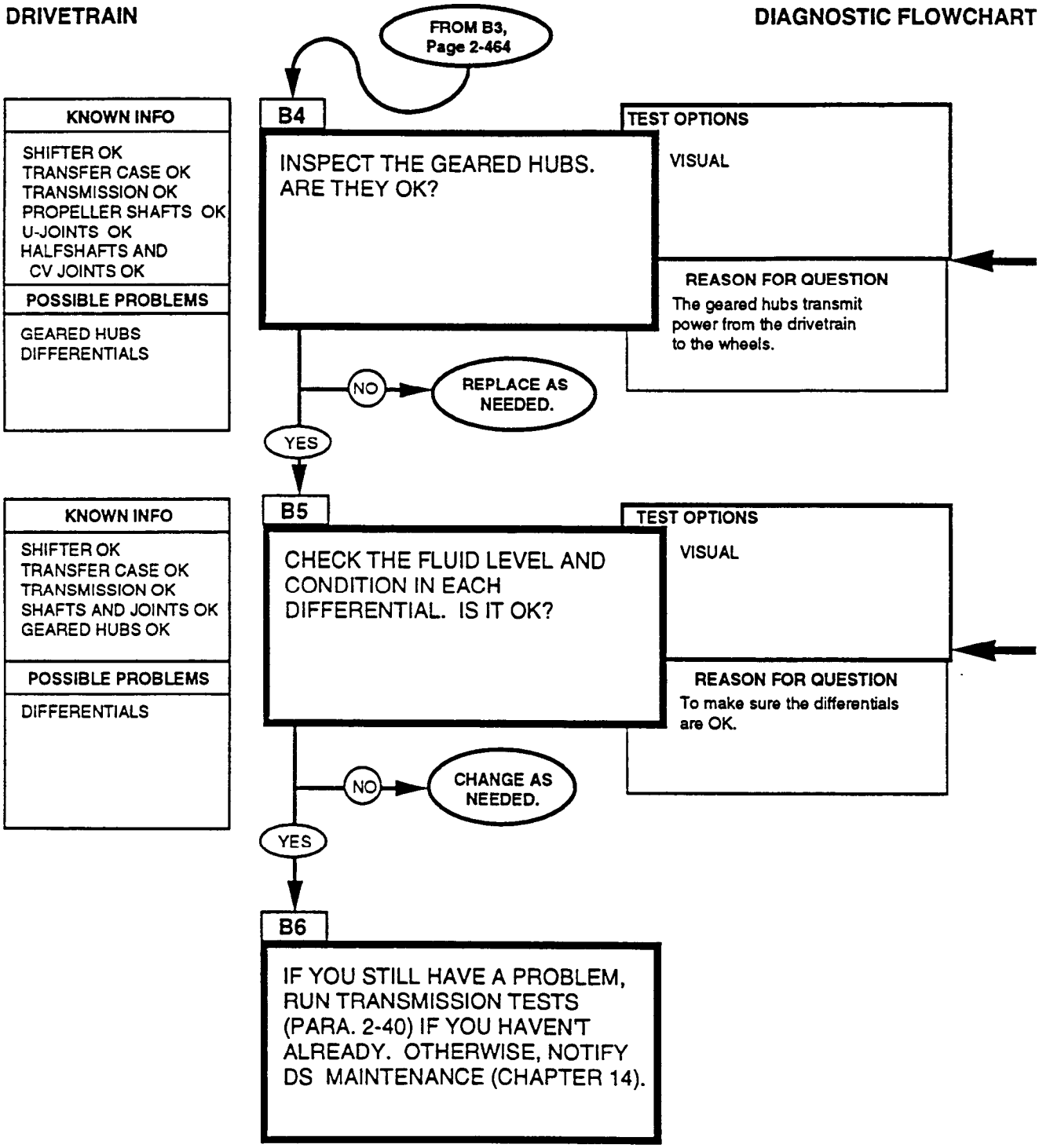
FROM B3, Page 2-464
B4
KNOWN INFO
SHIFTER OK
TRANSFER CASE OK
TRANSMISSION OK
PROPELLER SHAFTS OK
U-JOINTS OK
HALFSHAFTS AND CV JOINTS OK
POSSIBLE PROBLEMS
GEARED HUBS
DIFFERENTIALS
INSPECT THE GEARED HUBS. ARE THEY OK?
TEST OPTIONS
VISUAL
REASON FOR QUESTION
The geared hubs transmit power from the drivetrain to the wheels.
NO
REPLACE AS NEEDED.
YES
B5
KNOWN INFO
SHIFTER OK
TRANSFER CASE OK
TRANSMISSION OK
SHAFTS AND JOINTS OK
GEARED HUBS OK
POSSIBLE PROBLEMS
DIFFERENTIALS
CHECK THE FLUID LEVEL AND CONDITION IN EACH DIFFERENTIAL. IS IT OK?
TEST OPTIONS
VISUAL
REASON FOR QUESTION
To make sure the differentials are OK.
NO
CHANGE AS NEEDED.
YES
B6
IF YOU STILL HAVE A PROBLEM, RUN TRANSMISSION TESTS (PARA. 2-40) IF YOU HAVEN'T ALREADY. OTHERWISE, NOTIFY DS MAINTENANCE (CHAPTER 14).

REFERENCE INFORMATION

DRIVETRAIN

Make sure the geared hubs turn freely. For geared hub replacement procedure, refer to para. 6-9. Check mounting hardware for proper installation.

Lubricate in accordance with TM 9-2320-387-10.

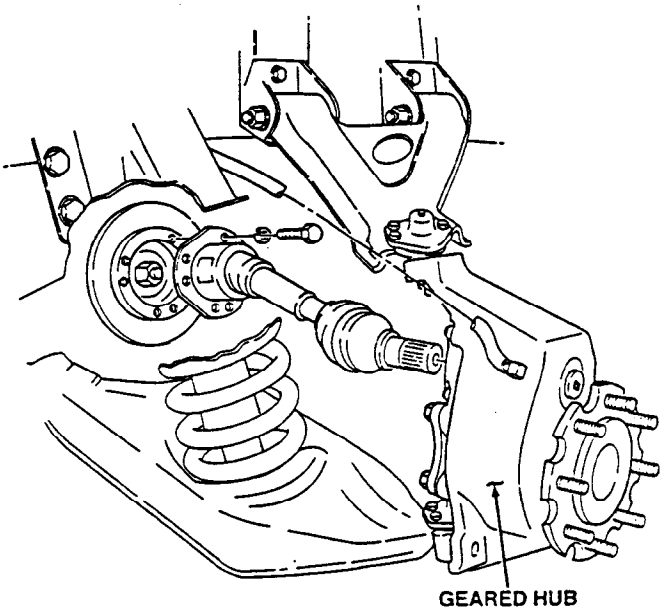

Check for loose mounting and broken parts. Notify GS maintenance (chapter 30).

Check fluid level in accordance with TM 9-2320-387-10.

Notify DS maintenance (chapter 14) for other faults.

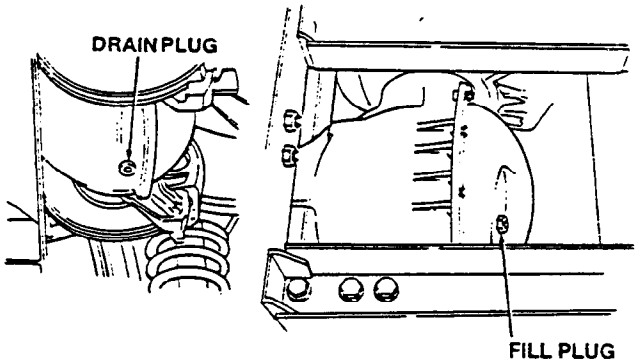

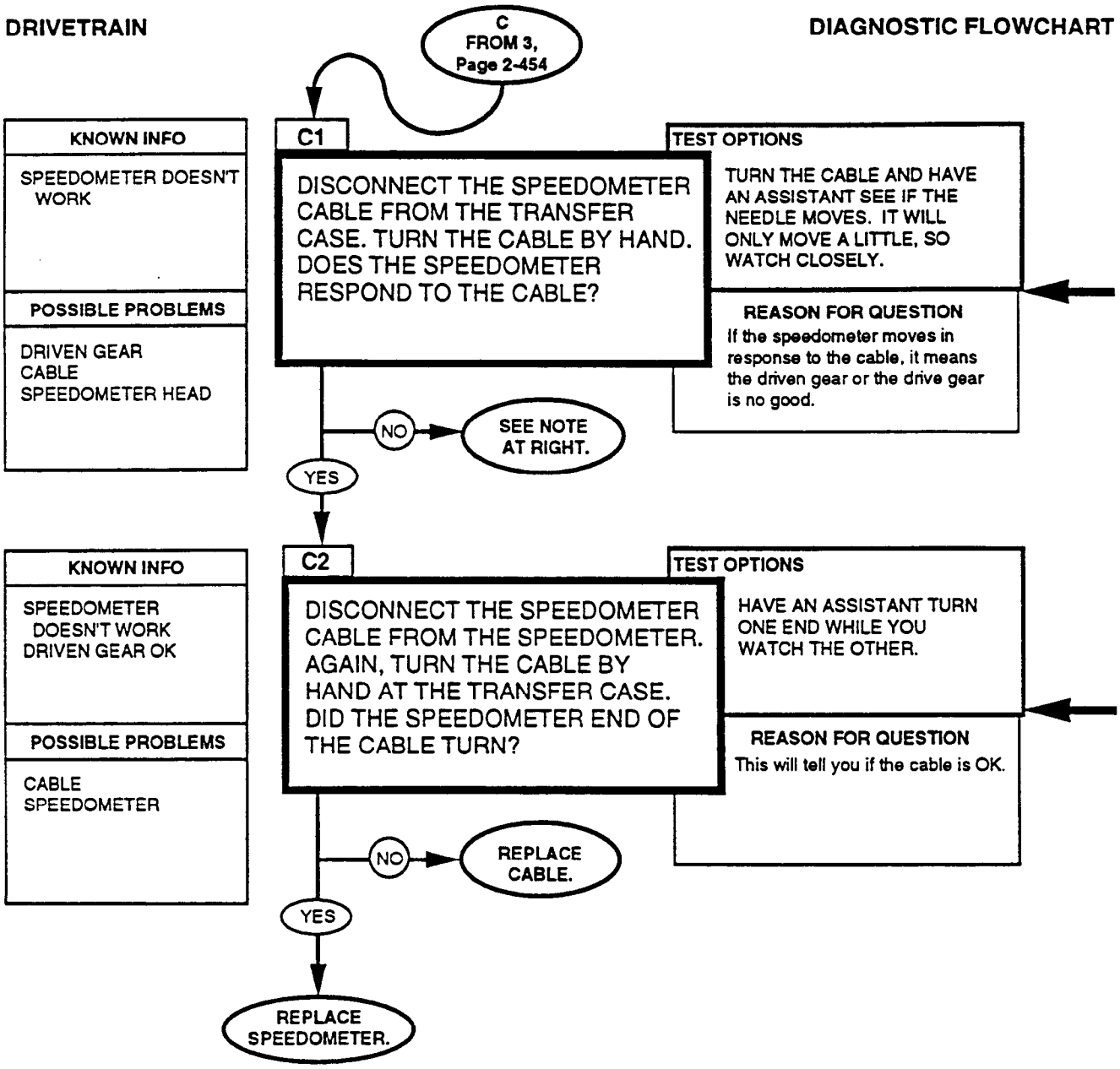
C
FROM 3,
Page 2-454
KNOWN INFO
SPEEDOMETER DOESN'T WORK
POSSIBLE PROBLEMS
DRIVEN GEAR
CABLE
SPEEDOMETER HEAD
C1
DISCONNECT THE SPEEDOMETER CABLE FROM THE TRANSFER CASE. TURN THE CABLE BY HAND. DOES THE SPEEDOMETER RESPOND TO THE CABLE?
TEST OPTIONS
TURN THE CABLE AND HAVE AN ASSISTANT SEE IF THE NEEDLE MOVES. IT WILL ONLY MOVE A LITTLE, SO WATCH CLOSELY.
REASON FOR QUESTION
If the speedometer moves in response to the cable, it means the driven gear or the drive gear is no good.
NO
SEE NOTE AT RIGHT.
YES
KNOWN INFO
SPEEDOMETER DOESN'T WORK
DRIVEN GEAR OK
POSSIBLE PROBLEMS
CABLE
SPEEDOMETER
C2
DISCONNECT THE SPEEDOMETER CABLE FROM THE SPEEDOMETER. AGAIN, TURN THE CABLE BY HAND AT THE TRANSFER CASE. DID THE SPEEDOMETER END OF THE CABLE TURN?
TEST OPTIONS
HAVE AN ASSISTANT TURN ONE END WHILE YOU WATCH THE OTHER.
REASON FOR QUESTION
This will tell you if the cable is OK.
NO
REPLACE CABLE.
YES
REPLACE SPEEDOMETER.

A NO answer means the speedometer did move.

NOTE

If you answer NO, check the driven gear in the transfer case. If it's OK, the problem is the drive gear. Notify DS maintenance (chapter 14).

Replace the driven gear (para. 5-17).

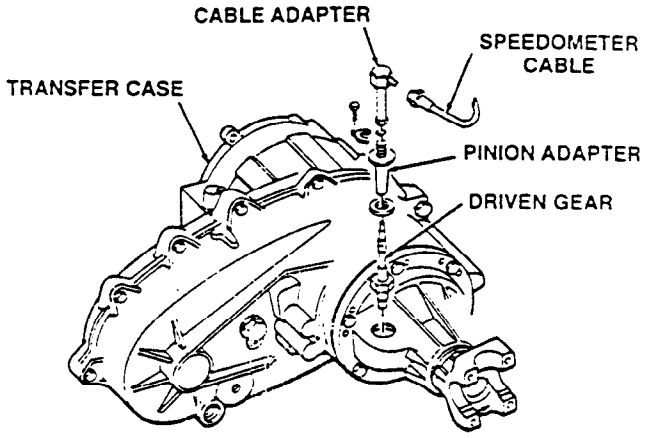

Replace the cable (para. 4-18).

Replace speedometer (para. 4-17).

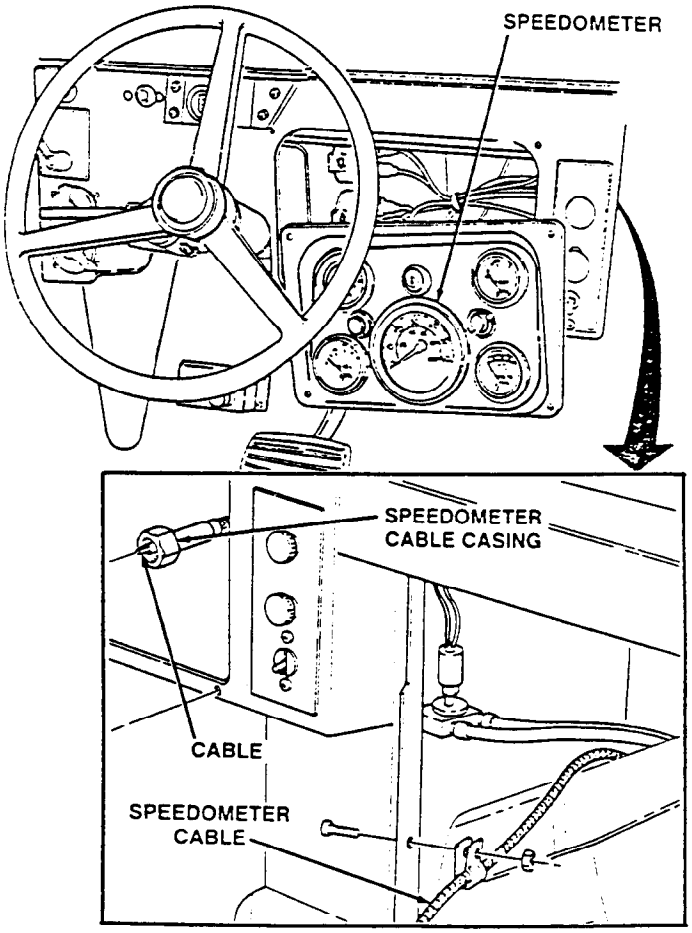

2-44. WINCH SYSTEM TESTS

These winch system tests may be run any time you think you have a winch problem or if you were sent here by another test chain. Just follow the path and answer the questions. Additional information and notes are given on the facing page when necessary.

WINCH SYSTEM — DIAGNOSTIC FLOWCHART

KNOWN INFO

NOTHING

POSSIBLE PROBLEMS

GROUND STRAP
WINCH CABLE
WINCH CONTROL CABLE CONNECTOR
WINCH POWER CABLES
WINCH
WINCH CONTROL

1

IS THE ELECTRIC WINCH GROUND STRAP COVERED IN DIRT OR MUD?

TEST OPTIONS

VISUAL

REASON FOR QUESTION

A dirty ground strap may cause the winch not to operate properly.

YES → CLEAN GROUND STRAP.

NO ↓

KNOWN INFO

GROUND STRAP OK

POSSIBLE PROBLEMS

WINCH CABLE
WINCH CONTROL CABLE CONNECTOR
WINCH POWER CABLES
WINCH
WINCH CONTROL

2

IS WINCH CABLE BOUND?

TEST OPTIONS

Visual

REASON FOR QUESTION

A loose winch cable may cause the winch not to operate properly.

NO → SECURE WINCH CABLE FIRMLY.

YES ↓

KNOWN INFO

GROUND STRAP OK
WINCH CABLE OK

POSSIBLE PROBLEMS

WINCH CONTROL CABLE CONNECTOR
WINCH POWER CABLES
WINCH
WINCH CONTROL

3

IS WINCH CONTROL CABLE CONNECTOR FREE FROM LOOSENESS OR CORROSION?

TEST OPTIONS

Visual

REASON FOR QUESTION

Looseness and corrosion at winch cables and connectors will interfere with the proper operation of the winch.

NO → CLEAN CORRODED CONNECTOR OR SECURE LOOSE CONNECTION.

YES ↓

GO TO 4, Page 2-474

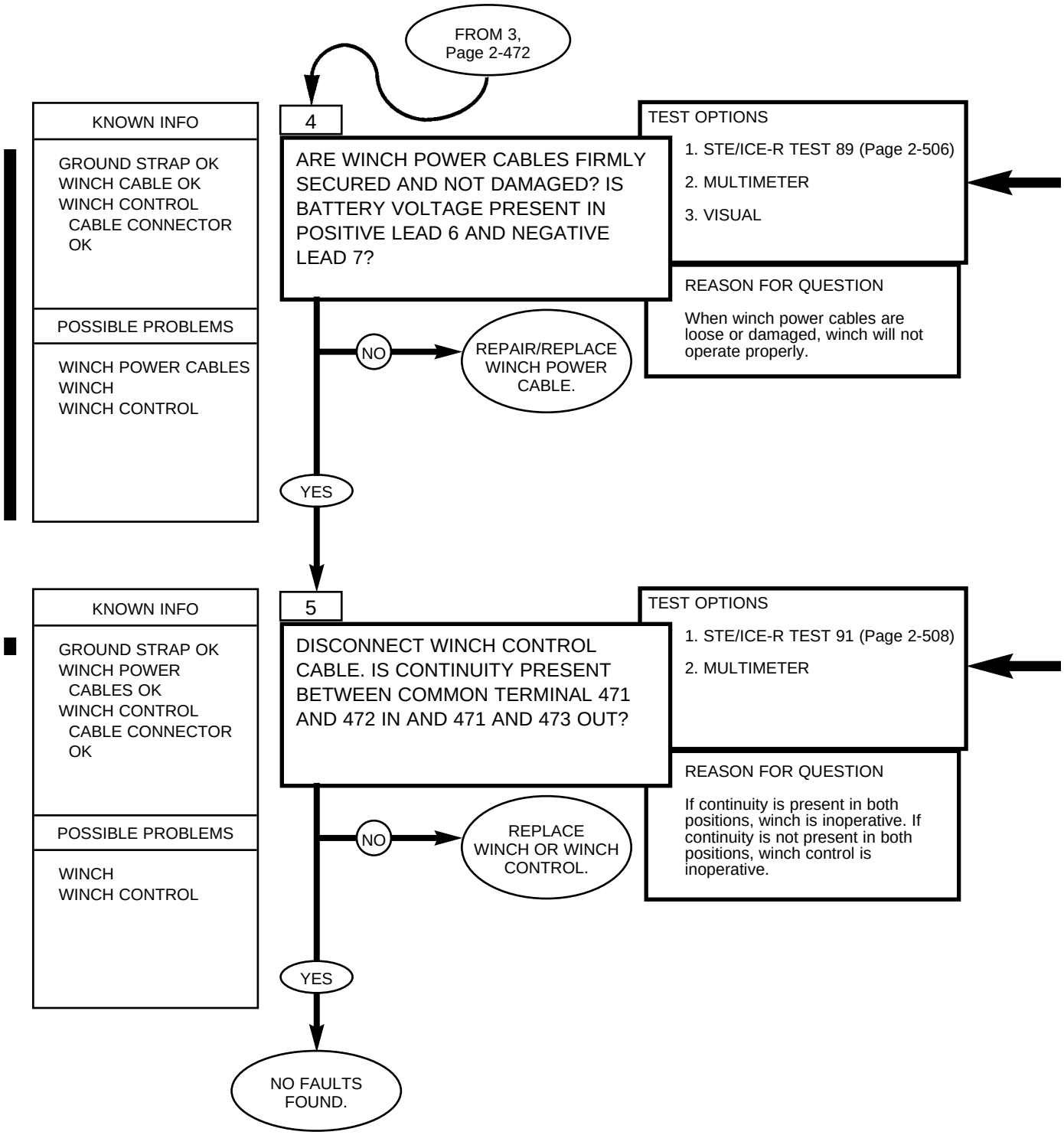
FROM 3, Page 2-472
KNOWN INFO
GROUND STRAP OK
WINCH CABLE OK
WINCH CONTROL CABLE CONNECTOR OK
POSSIBLE PROBLEMS
WINCH POWER CABLES
WINCH
WINCH CONTROL
4
ARE WINCH POWER CABLES FIRMLY SECURED AND NOT DAMAGED? IS BATTERY VOLTAGE PRESENT IN POSITIVE LEAD 6 AND NEGATIVE LEAD 7?
TEST OPTIONS
1. STE/ICE-R TEST 89 (Page 2-506)
2. MULTIMETER
3. VISUAL
REASON FOR QUESTION
When winch power cables are loose or damaged, winch will not operate properly.
NO
REPAIR/REPLACE WINCH POWER CABLE.
YES
KNOWN INFO
GROUND STRAP OK
WINCH POWER CABLES OK
WINCH CONTROL CABLE CONNECTOR OK
POSSIBLE PROBLEMS
WINCH
WINCH CONTROL
5
DISCONNECT WINCH CONTROL CABLE. IS CONTINUITY PRESENT BETWEEN COMMON TERMINAL 471 AND 472 IN AND 471 AND 473 OUT?
TEST OPTIONS
1. STE/ICE-R TEST 91 (Page 2-508)
2. MULTIMETER
REASON FOR QUESTION
If continuity is present in both positions, winch is inoperative. If continuity is not present in both positions, winch control is inoperative.
NO
REPLACE WINCH OR WINCH CONTROL.
YES
NO FAULTS FOUND.

Repair/replace winch power cables (para. 12-28).

DC VOLTAGE 0-45 VOLTS
STE/ICE-R TEST 89

1. Connect RED clip to the indicated test point, BLACK clip to negative or ground.
2. Start Test 89, DC Volts.
3. Displayed reading is in volts.

BATTERY VOLTAGE
MULTIMETER

1. Set the voltmeter to a DC volts scale of at least 40 volts.
2. Connect the RED lead to positive and the BLACK lead to negative.
3. Be sure to read the correct scale.

Replace winch or winch control (para. 12-27).

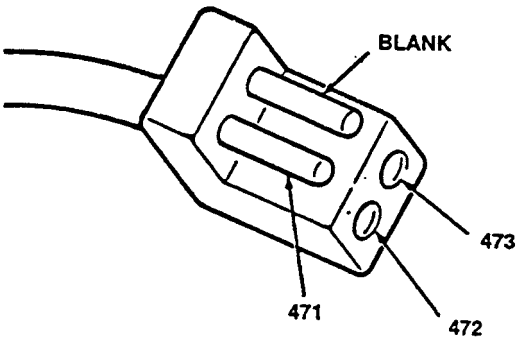

RESISTANCE AND CONTINUITY
0-4,500 OHMS
STE/ICE-R TEST 91

1. Connect RED clip and BLACK clip to the indicated terminals in question; RED to the first, BLACK to the second.
2. Start Test 91, 0-4,500 Ohms.
3. Displayed reading is in ohms. Less than 5 ohms is continuity. If the resistance is over 4,500 ohms, STE/ICE-R displays .9.9.9.9.

CONTINUITY (RESISTANCE)
MULTIMETER

1. Set the voltmeter to an ohms scale of about 1,000 ohms.
2. Connect the RED and BLACK leads to the connections stated in the question.
3. Be sure to read the correct scale. Less than 5 ohms indicates continuity. For an open circuit, the meter should peg full scale (needle all the way to the left).

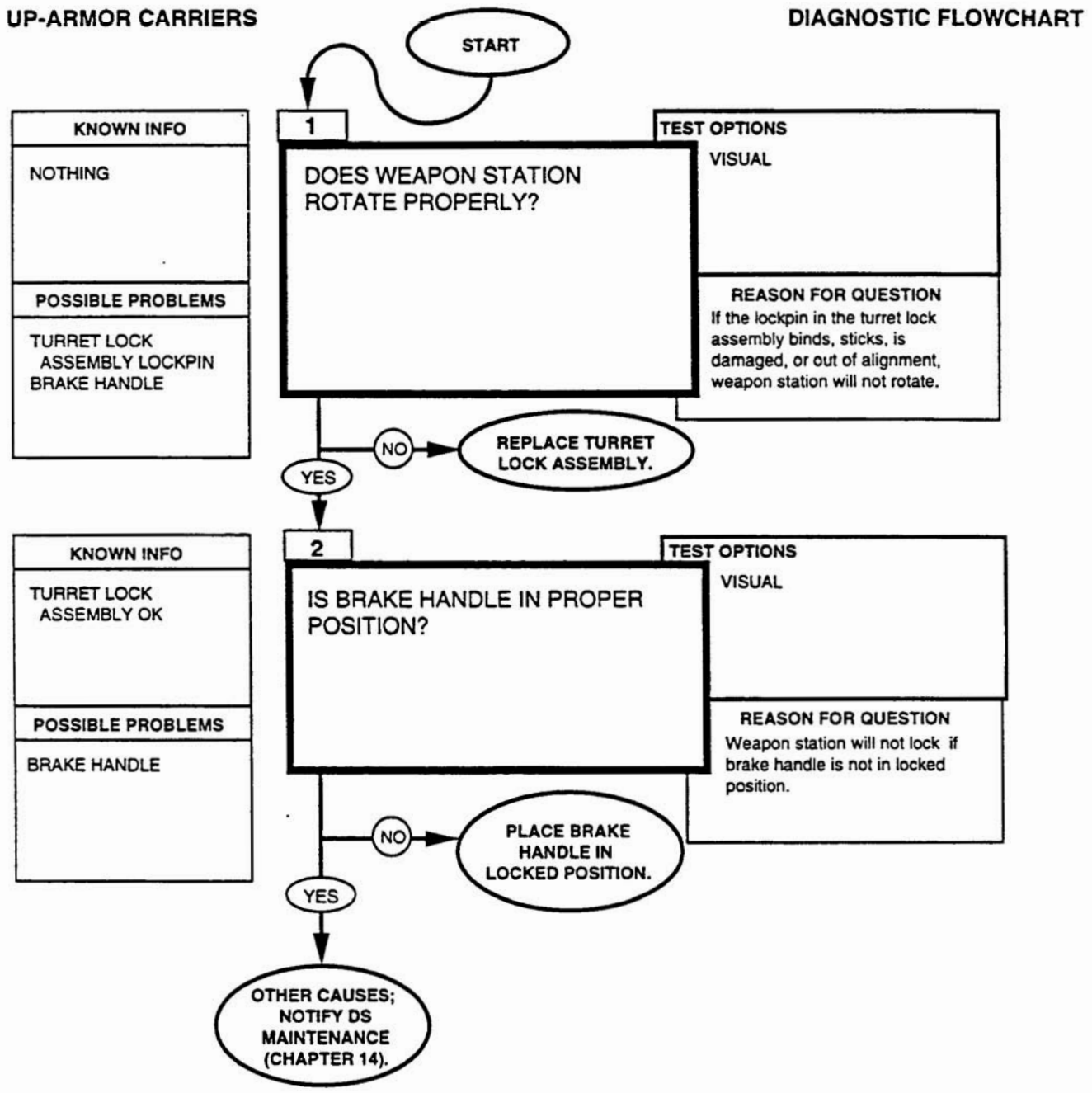
UP-ARMOR CARRIERS
DIAGNOSTIC FLOWCHART
START
KNOWN INFO
NOTHING
POSSIBLE PROBLEMS
TURRET LOCK ASSEMBLY LOCKPIN
BRAKE HANDLE
1
DOES WEAPON STATION ROTATE PROPERLY?
TEST OPTIONS
VISUAL
REASON FOR QUESTION
If the lockpin in the turret lock assembly binds, sticks, is damaged, or out of alignment, weapon station will not rotate.
NO
REPLACE TURRET LOCK ASSEMBLY.
YES
KNOWN INFO
TURRET LOCK ASSEMBLY OK
POSSIBLE PROBLEMS
BRAKE HANDLE
2
IS BRAKE HANDLE IN PROPER POSITION?
TEST OPTIONS
VISUAL
REASON FOR QUESTION
Weapon station will not lock if brake handle is not in locked position.
NO
PLACE BRAKE HANDLE IN LOCKED POSITION.
YES
OTHER CAUSES; NOTIFY DS MAINTENANCE (CHAPTER 14).

Replace turret lock assembly (para. 11-56).

Place brake handle in locked position (TM 9-2320-387-10).

2-44.1. HYDRAULIC WINCH SYSTEMS TESTS

These winch system tests may be run any time you think you have a winch problem or if you were sent here by another test chain, just follow the path and answer the questions. Additional information and notes are given on the facing page when necessary.

HYDRAULIC WINCH SYSTEM — DIAGNOSTIC FLOWCHART

KNOWN INFO

WINCH INOPERABLE

POSSIBLE PROBLEMS

FLUID LEVEL
WINCH HYDRAULIC LINE CONNECTORS
WINCH CABLE

1

IS POWER STEERING FLUID RESERVOIR FULL?

TEST OPTIONS

VISUAL

REASON FOR QUESTION

Low power steering fluid will cause winch not to operate properly.

NO → TOP-OFF POWER STEERING RESERVOIR

YES ↓

KNOWN INFO

FLUID LEVEL OK

POSSIBLE PROBLEMS

WINCH HYDRAULIC LINE CONNECTORS
WINCH CABLE

2

ARE HYDRAULIC WINCH LINE CONNECTORS TIGHT AND LEAK FREE?

TEST OPTIONS

VISUAL

REASON FOR QUESTION

Loose hydraulic line connectors will leak and cause winch not to operate properly.

NO → TIGHTEN WINCH LINE CONNECTORS

YES ↓

KNOWN INFO

WINCH HYDRAULIC LINE CONNECTORS OK
FLUID LEVEL OK

POSSIBLE PROBLEMS

WINCH CABLE
WINCH POWER CABLES
WINCH ELECTRICAL CIRCUIT BREAKER

3

IS WINCH CABLE STACKED OR BOUND?

TEST OPTIONS

VISUAL

REASON FOR QUESTION

If winch cable is stacked or bound, this will cause winch not to operate properly.

NO → UNSTACK OR UNBIND WINCH CABLE

YES ↓

GO TO 4, Page 2-475.4

Fill power steering fluid reservoir. (Refer to TM 9-2320-387-10.)

Check all hydraulic line connectors and winch control valves. Tighten any loose connections. Fill and bleed power steering system as necessary. (Refer to para. 8-27 or 8-27.1.)

WARNING

Wear leather gloves when handling winch cable. Do not handle cable with bare hands. When fully extending winch cable, ensure that five wraps of winch cable remain on drum at all times. Direct all personnel to stand clear of winch cable during operation. Failure to do so may cause damage to vehicle and injury or death to personnel.

Ensure winch cable is not stacked or binding with tiebars on winch housing. If winch cable is stacked or binding, shut down vehicle and carefully remove tiebars from winch housing. Move winch control levers to FREESPOOL and attempt to pay out winch cable by hand. (Refer to TM 9-2320-387-10.)

HYDRAULIC WINCH SYSTEM — DIAGNOSTIC FLOWCHART

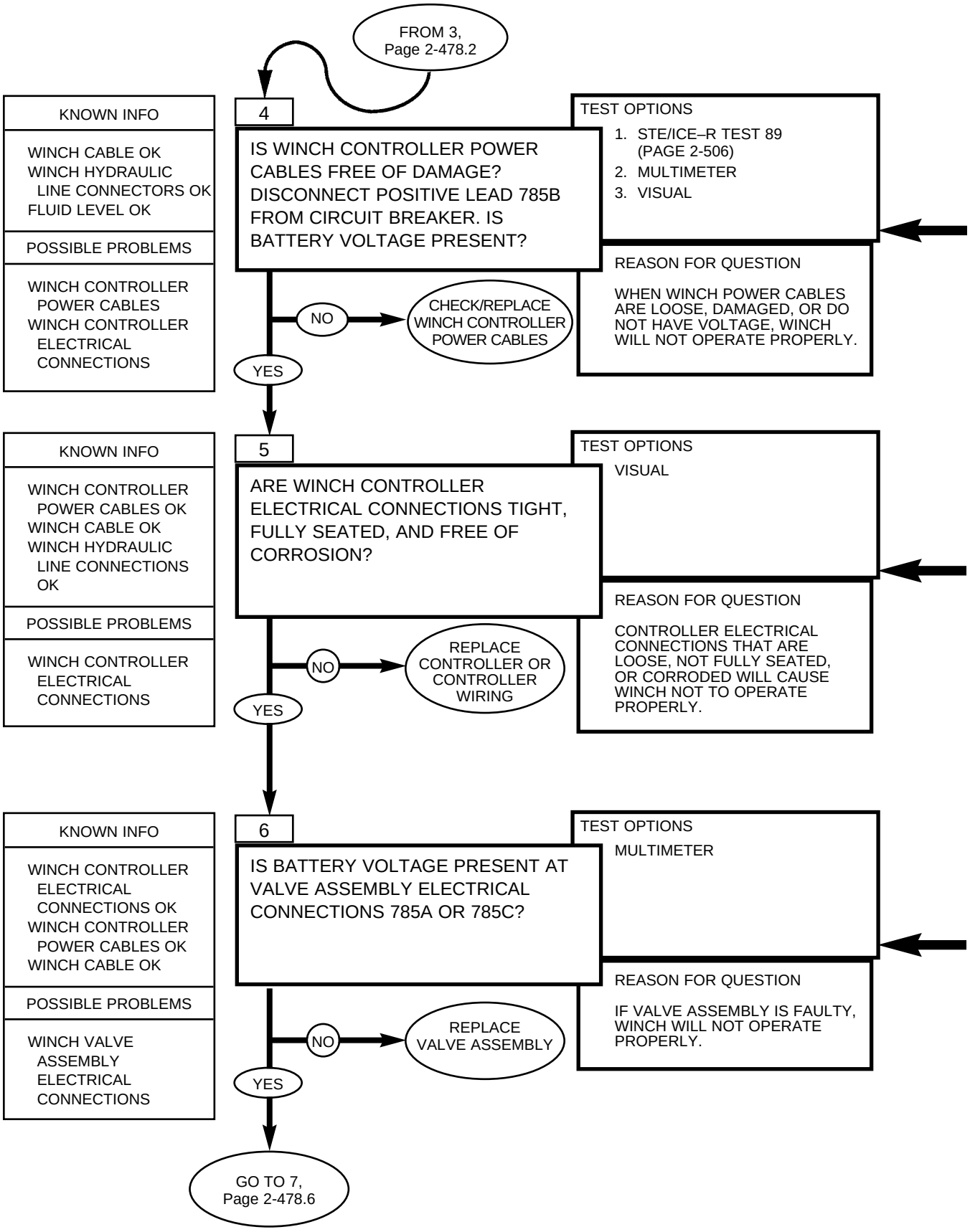

REFERENCE INFORMATION

HYDRAULIC WINCH SYSTEM

Replace winch controller power cables (para. 12-36.6).

While depressing either IN or OUT button on controller, check for battery voltage at wires going to valve assembly. If battery voltage is present, ensure electrical connections are tight and fully seated and attempt winch operations.

If winch fails to operate, replace valve assembly (para. 25-13.2 M1113) (para. 12-36.5 M1114).

DC VOLTAGE 0-45 VOLTS STE/ICE–R TEST 89
1. Connect RED clip to the indicated test point, BLACK clip to the negative or ground. 2. Start test 89, DC Volts. 3. Displayed reading is in volts.

BATTERY VOLTAGE MULTIMETER
1. Set the voltmeter to a DC volts scale of at least 40 volts. 2. Connect the RED lead to positive and the BLACK lead to negative. 3. Be sure to read the correct scale.

HYDRAULIC WINCH SYSTEM — DIAGNOSTIC FLOWCHART

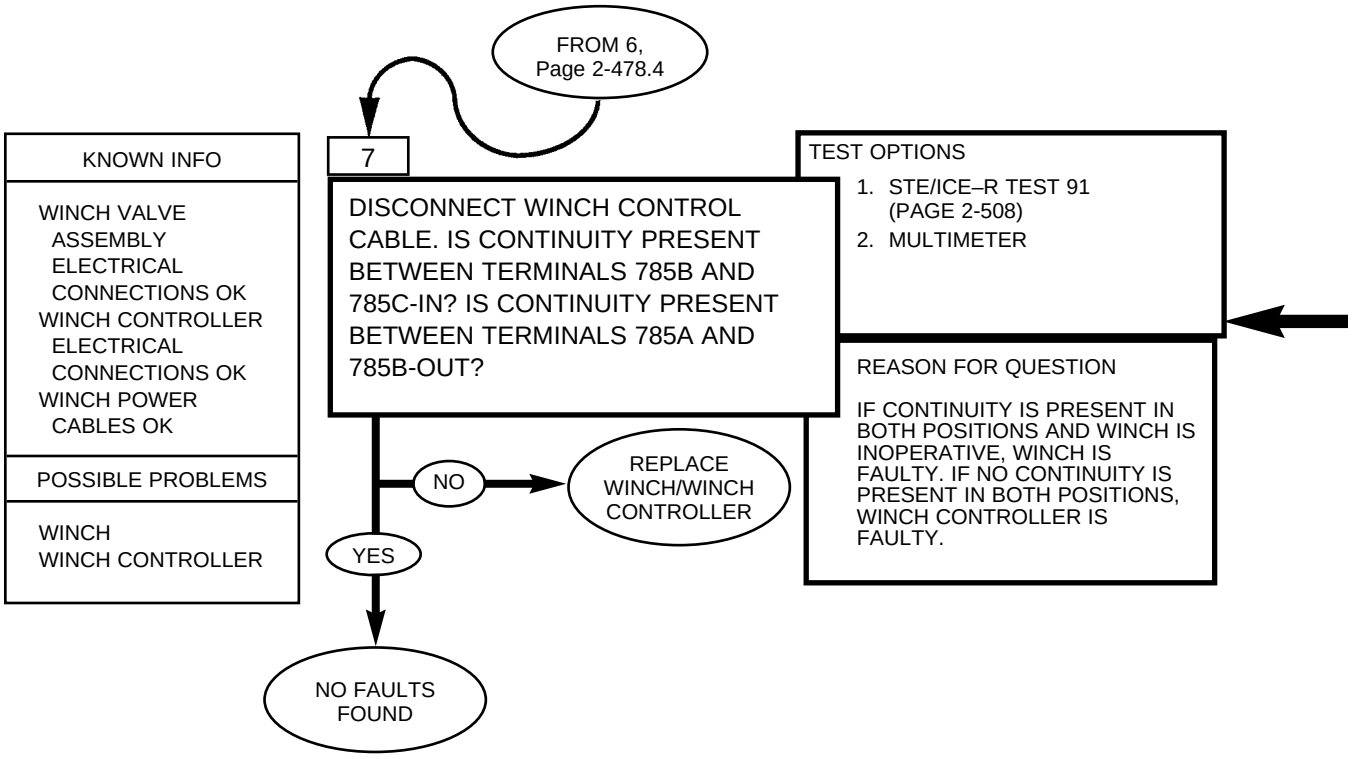

Replace winch (para. 12-27.1) or winch controller (para. 12-32.1).

RESISTANCE AND CONTINUITY
0-4,500 OHMS
STE/ICE–R TEST 91

1. Connect RED clip and BLACK clip to the indicated terminals in question; RED to the first, BLACK to the second.
2. START TEST 91, 0-4,500 Ohms.
3. Displayed reading is in Ohms. Less than 5 Ohms is continuity. If the resistance is over 4,500 Ohms, STE/ICE–R displays .9.9.9.9.

CONTINUITY (RESISTANCE)
MULTIMETER

1. Set the voltmeter to an Ohms scale of about 1,000 Ohms.
2. Connect RED and BLACK leads to the connections stated in the question.
3. Be sure to read the correct scale. Less than 5 Ohms indicates continuity. For an open circuit, the meter should peg full scale (needle all the way to the left).

2-45. DCA TROUBLESHOOTING

These diagnostic connector assembly tests can be run any time you think there is a problem with the vehicle's DCA or its on-board transducers. Do not use this paragraph to test the STE/ICE-R and its cables and transducers. Refer to TM 9-4910-571-12&P to test the STE/ICE-R. This paragraph will also supply instructions on how to use the STE/ICE-R in the TK mode to substitute for tests run through the DCA.

The HMMWV is equipped with three transducers – the pulse tachometer, the fuel pressure transducer, and the current shunt. A power test (12, 13) or rpm test (10) use the pulse tachometer. The fuel pressure test (24) uses the pressure transducer. All of the starting circuit tests and battery tests done through the DCA use the shunt. Check to see that the wires are connected to the transducer for the test you're trying to run. There is a four-wire connector for the fuel pressure transducer, a two-wire connector for the pulse tachometer, and there are four wires connected to the shunt in addition to the battery cables.

The fold-out page FP-29 gives a cross reference between DCA tests and Transducer Kit tests. Use this cross reference to find out how to substitute TK tests for DCA tests if you have a bad DCA. The Location of Parts page has a schematic of the HMMWV DCA.

DCA TROUBLESHOOTING

DIAGNOSTIC FLOWCHART

START

1

KNOWN INFO

STE/ICE-R OK
CABLES OK
TK OK
RUNNING A DCA TEST

POSSIBLE PROBLEMS

DCA
TRANSDUCERS
VEHICLE SYSTEMS

WERE YOU RUNNING A FUEL PRESSURE, RPM, OR POWER TEST?

TEST OPTIONS

SEE NOTE TO RIGHT ABOUT THIS PARAGRAPH.

REASON FOR QUESTION

You need to know which transducer is causing the problem.

NO → GO TO A, Page 2-484

YES

2

KNOWN INFO

STE/ICE-R OK
W1 CABLE OK

POSSIBLE PROBLEMS

DCA
TRANSDUCERS
VEHICLE SYSTEMS

WERE YOU RUNNING STE/ICE-R TEST 24, FUEL PRESSURE?

TEST OPTIONS

NONE

REASON FOR QUESTION

You need to know which transducer is causing the problem.

NO → GO TO B, Page 2-486

YES

3

KNOWN INFO

STE/ICE-R OK
W1 CABLE OK
RUNNING TEST 24

POSSIBLE PROBLEMS

DCA
TRANSDUCERS
VEHICLE SYSTEMS

DISCONNECT CONNECTOR DIRECTLY BEFORE FUEL PRESSURE TRANSDUCER. INSPECT FOR BENT PINS. DOES EVERYTHING LOOK OK?

TEST OPTIONS

VISUAL

REASON FOR QUESTION

If the transducer pins are bent or broken, you will get bad measurements.

NO → REPAIR OR REPLACE WIRING/ TRANSDUCER AS NEEDED.

YES → GO TO 4, Page 2-482

REFERENCE INFORMATION

DCA TROUBLESHOOTING

NOTE

The diagnostics in this chapter assume you have already run a test through the DCA. If you haven't run a test and are here to test the entire DCA, run Tests 10 (RPM), 24 (Fuel Pressure), and 80 (Battery Current). Make note of the results for later.

If you want to test the entire DCA harness, answer YES here and then return and answer NO when you've finished the test chain. Answer NO here to test the shunt.

Answer NO here to test the pulse tachometer.

Repair wiring (para. 4-80) or replace transducer (para. 4-30).

DCA TROUBLESHOOTING

DIAGNOSTIC FLOWCHART

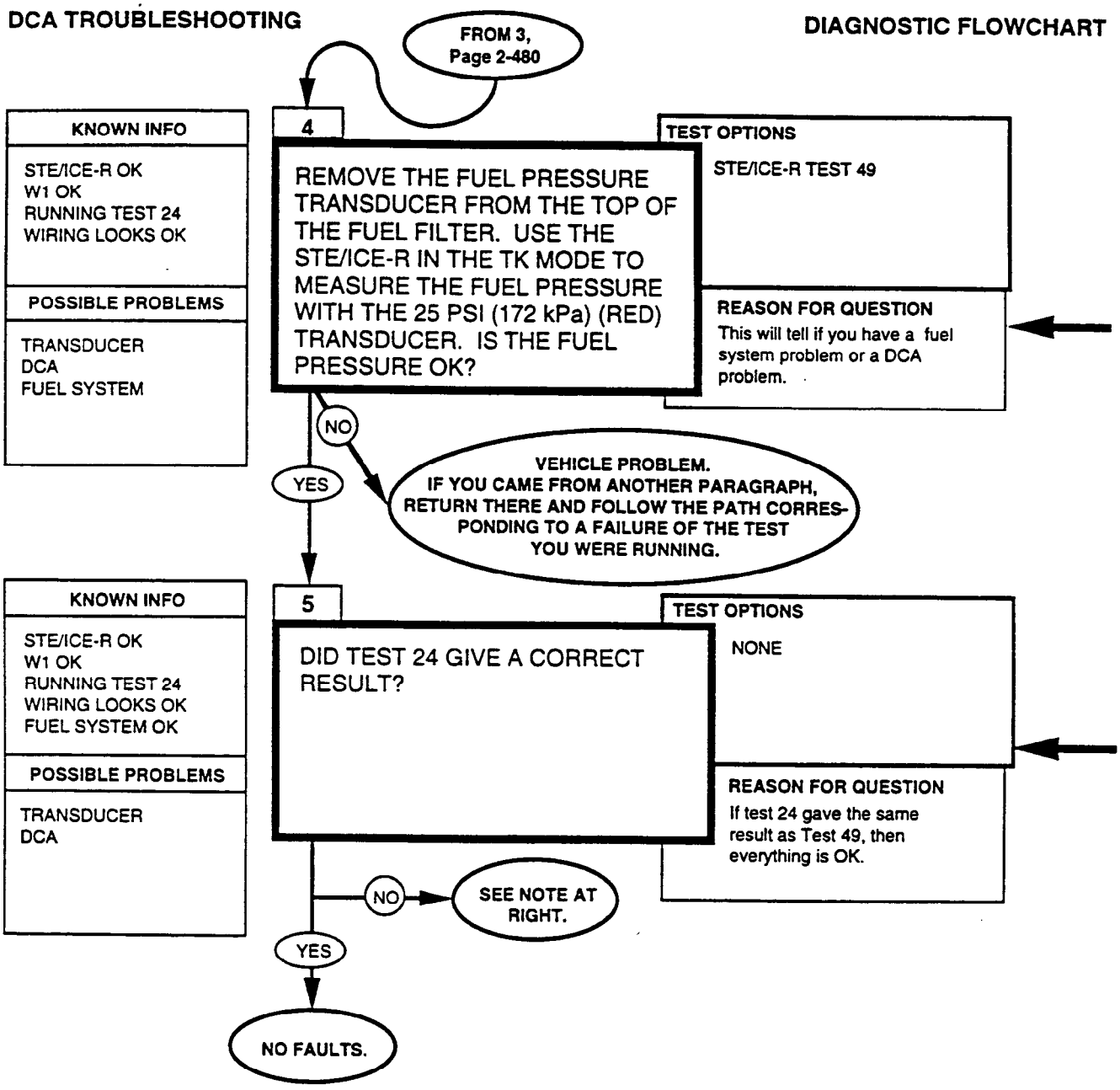

The fuel pressure should always be greater than 3 psi (21 kPa). If you get about the same pressure with the 2 transducers, then you have a fuel system problem. Remove fuel pressure transducer (para. 4-30). Make sure the STE/ICE-R is powered by a W5 cable.

0 TO 25 PSIG PRESSURE STE/ICE-R TEST 49
1. CONNECT RED TRANSDUCER TO FUEL FILTER. 2. CONNECT TRANSDUCER TO A W4 CABLE. MAKE SURE THE SYSTEM UNDER TEST IS NOT PRESSURIZED. CONNECT OTHER END OF W4 TO J2 OR J3. PERFORM OFFSET TEST. 3. TURN ON SYSTEM AND READ PRESSURE.

You will have to decide if Test 24 gave the wrong result. If Test 24 gave a substantially different result than Test 49, answer NO to this question.

NOTE

VEHICLE DCA FAULTY. Use the STE/ICE-R in the TK mode for the rest of your testing. See the chart on the foldout page for a way to run the rest of the DCA tests in the TK mode. Have DS maintenance repair the DCA when you're finished.

DCA TROUBLESHOOTING

DIAGNOSTIC FLOWCHART

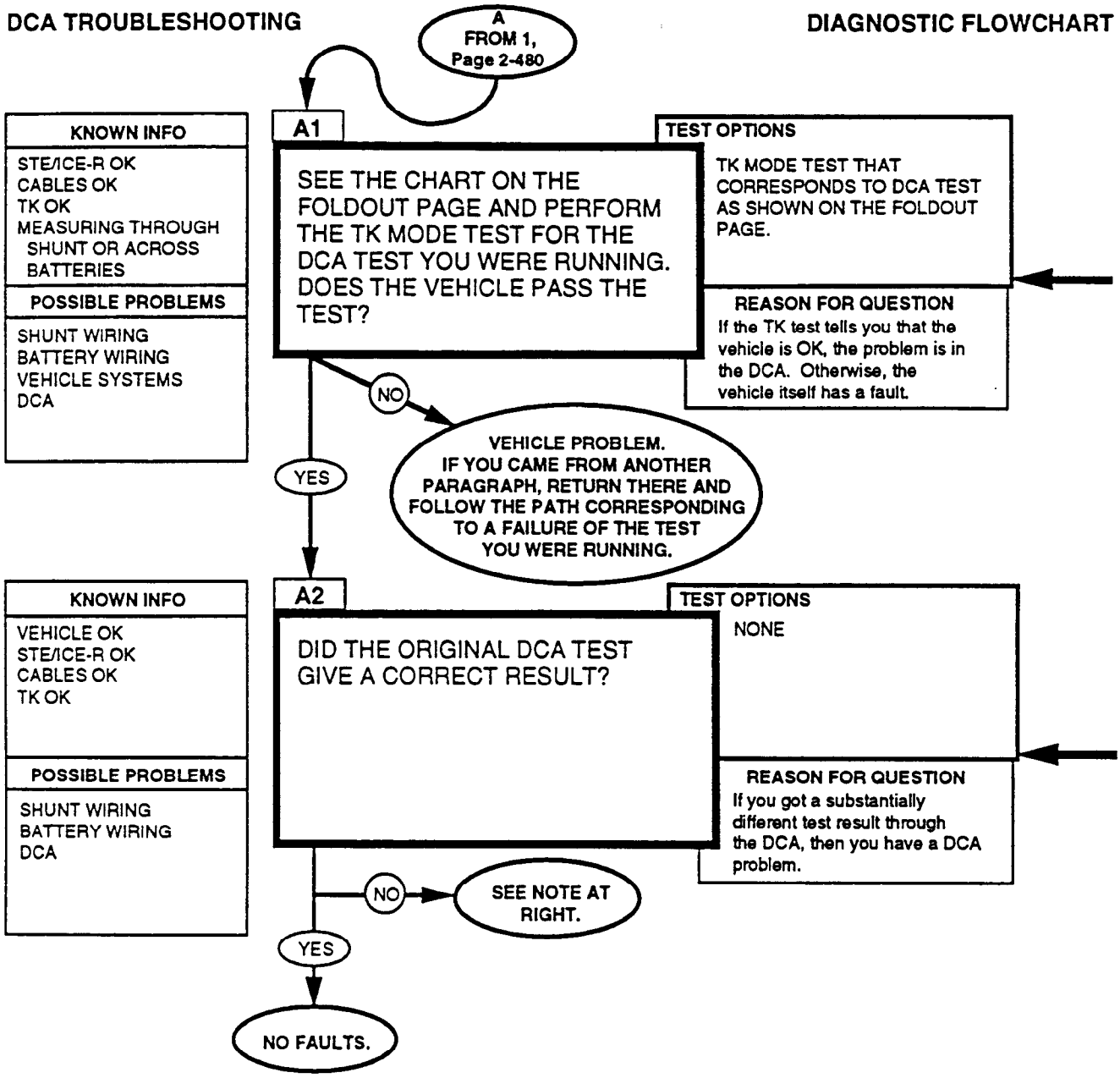

Make sure the STE/ICE-R is powered by a W5 cable.

If the TK mode test tells you that the vehicle has a fault, return to the paragraph you came from. If the vehicle tests OK, continue here.

You will have to decide if the DCA test result is wrong. If the TK test gave a substantially different result than the DCA test, answer NO to this question.

NOTE

VEHICLE DCA FAULTY. Use the STE/ICE-R in the TK mode for the rest of your testing. See the chart on the foldout page for a way to run the rest of the DCA tests in the TK mode. Have DS maintenance repair the DCA when you're finished.

You can check the connections at the shunt and the power stud to see if they are OK. Look at the schematic for help.

DCA TROUBLESHOOTING

DIAGNOSTIC FLOWCHART

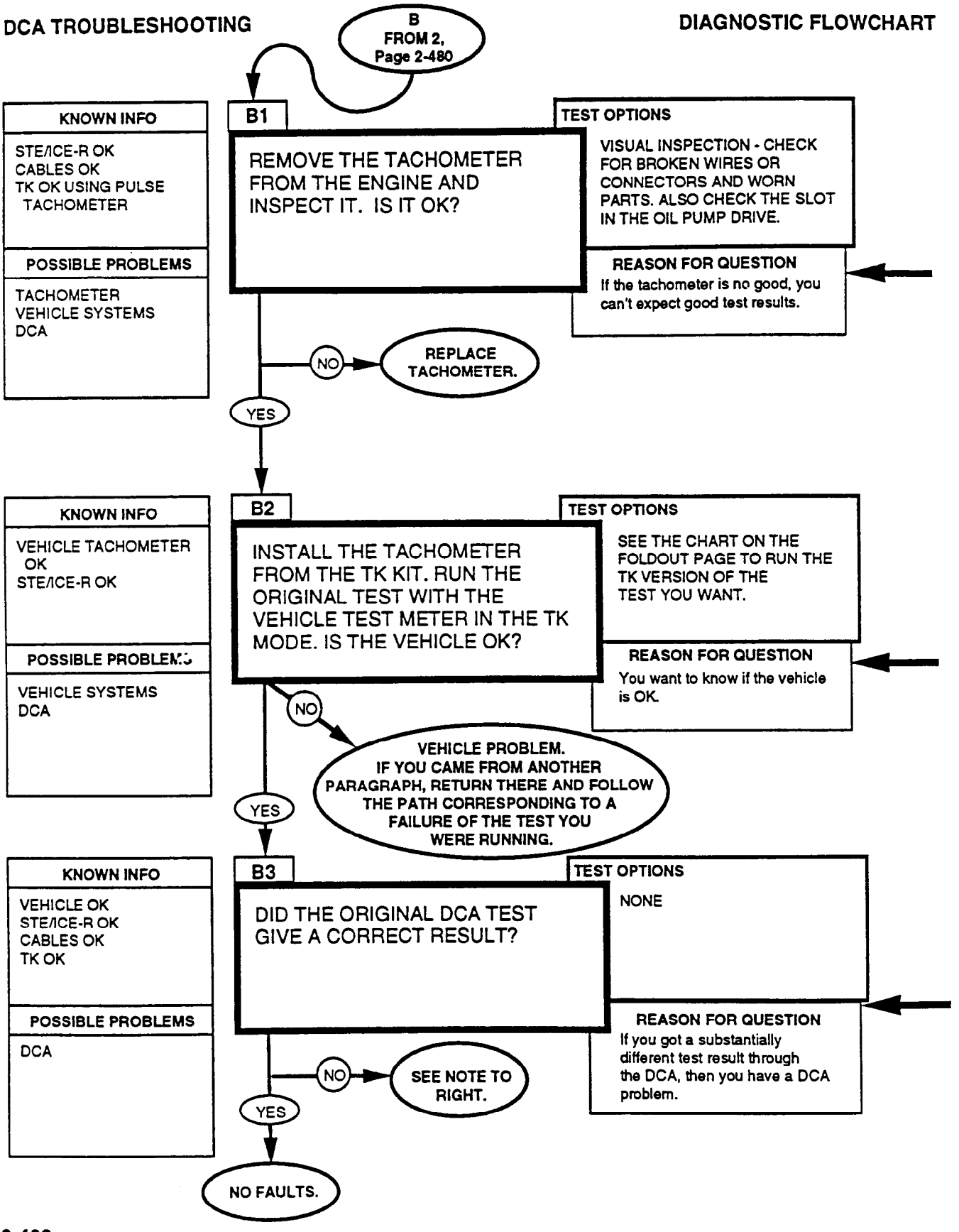

Remove tachometer (para. 4-16). If you find the tachometer defective, replace it and return to where you came from and rerun the original DCA test. If it fails again, return to this question and answer YES.

Make sure the STE/ICE-R is powered by the W5 cable.

If you don't find any faults in the vehicle, the slot in the oil pump drive could be too worn to drive the tachometer. If you see this, notify DS maintenance (chapter 14).

You will have to decide if the DCA test result is wrong. If the TK test gave a substantially different result than the DCA test, answer NO to this question.

NOTE

VEHICLE DCA FAULTY. Use the STE/ICE-R in the TK mode for the rest of your testing. See the chart on the foldout page for a way to run the rest of the DCA tests in the TK mode. Have DS maintenance repair the DCA when you're finished.

2-46. STE/ICE-R TEST PROCEDURES

This paragraph will be helpful when using the STE/ICE-R to answer diagnostic questions. Use this paragraph as a reference if you need additional information about a specific test. This paragraph contains information such as possible errors, test procedures, control codes, and additional notes as necessary. The following chart will help you find the test you need. The STE/ICE-R setup and internal checks (Test No. G01, page 2-519) must be performed prior to performing tests. A complete description and operation of the STE/ICE-R is found on page 2-509. See TM 9-4910-571-12&P for additional information.

TEST NAME	TEST #	PAGE #
ENGINE RPM (AVERAGE)	10	2-490
POWER TEST (RPM/SEC)	12	2-491
POWER TEST (PERCENT)	13	2-492
COMPRESSION UNBALANCE TEST	14	2-493
FUEL SUPPLY PRESSURE (PSI)	24	2-494
PRESSURE (PSI) 0 TO 1,000	50	2-495
BATTERY VOLTAGE	67	2-496
STARTER MOTOR VOLTAGE	68	2-497
STARTER NEGATIVE CABLE VOLTAGE DROP	69	2-498
STARTER SOLENOID VOLTS	70	2-499
STARTER CURRENT AVERAGE	71	2-500
CURRENT FIRST PEAK	72	2-501
BATTERY INTERNAL RESISTANCE	73	2-502
STARTER CIRCUIT RESISTANCE	74	2-503
BATTERY RESISTANCE CHANGE	75	2-504
BATTERY CURRENT	80	2-505
DC VOLTAGE 0 TO 45 VOLTS	89	2-506
DC CURRENT 0 TO 1,500 AMPS	90	2-507
RESISTANCE AND CONTINUITY 0 TO 4,500 OHMS	91	2-508

2-46. STE/ICE-R TEST PROCEDURES (Cont'd)

ENGINE RPM (AVERAGE) TEST #10

Description:

This procedure measures engine speed in the range 50 to 5,000 rpm. At speeds below 50 rpm, the VTM will display 0. At speeds above 5,000 rpm, the display may give a false reading. Test requires DCA hookup only.

Pre-Test Procedures:

Run confidence test.

Typical Applications:

Check engine speed.

Possible Error Messages:

E014 Incorrect number of cylinders entered.

Test Procedure:

1. Set TEST SELECT switches to 10.
2. Press and release TEST button.
3. Start engine.
4. Observe displayed value (RPM).

2-46. STE/ICE-R TEST PROCEDURES (Cont'd)

POWER TEST (RPM/SEC) TEST #12

Description:

This procedure measures an engine's power-producing potential in units of RPM/SEC. Test requires DCA hookup only.

Pre-Test Procedures:

Run confidence test. Warm up engine to operating temperature.

Typical Applications:

Check engine power in units of RPM/SEC.

Possible Error Messages:

E009 Engine not running at start of test.
E011 Throttle control operated incorrectly.
E012 Ignition adapter/pulse tachometer missing.
E014 Incorrect number of cylinder entries.
E033 Error in entry of power test constants.

Test Procedure:

1. Start and idle engine.
2. Set TEST SELECT switches to 10.
3. Press and release TEST button.
4. Observe displayed value (RPM) to adjust idle speed, if necessary.
5. Press down sharply on accelerator and observe displayed value (RPM) to adjust governor speed, if necessary.
6. Set TEST SELECT switches to 12.
7. Press and release TEST button.
8. Wait for prompting message CIP to appear.
9. When CIP appears on display, press down sharply on engine accelerator and hold it to the floor. When VTM displays a number, release accelerator.
10. Observe displayed value (RPM/SEC).

NOTES:

Engine idle speed must be checked before performing power test. Idle speed must be approximately 675 rpm to run test.
Engine governor no-load speed must be checked before performing power test. Governor no-load speed must be within the 3,600 - 3,800 rpm range to run test.

2-46. STE/ICE-R TEST PROCEDURES (Cont'd)

POWER TEST (PERCENT) TEST #13

Description:

This procedure measures the percentage of engine's power-producing potential as compared to a good engine. Test requires DCA hookup only.

Pre-Test Procedures:

Run confidence test. Warm up engine to operating temperature.

Typical Applications:

Check engine power.

Possible Error Messages:

E009	Engine not running at start of test.
E011	Throttle control operated incorrectly.
E012	Ignition adapter/pulse tachometer missing.
E024	Test not valid for VID entered.

Test Procedure:

1. Start and idle engine.
2. Set TEST SELECT switches to 10.
3. Press and release TEST button.
4. Observe displayed value (RPM) to adjust idle speed, if necessary.
5. Press down sharply on on engine accelerator and observe displayed value (RPM) to adjust governor speed, if necessary.
6. Set TEST SELECT switches to 13.
7. Press and release TEST button.
8. Wait for prompting message CIP to appear.
9. When CIP appears on display, press down sharply on engine accelerator and hold it to the floor. When VTM displays OFF, release accelerator.
10. A number will be displayed after the engine has returned to idle speed. This number is the test result in units of percent of nominal-rated power.

NOTE:

Engine idle speed must be checked before performing power test. Idle speed must be approximately 675 rpm to run test. Engine governor no-load speed must be checked before performing power test. Governor no-load speed must be within the 3,900 - 4,100 rpm range to run test.

2-46. STE/ICE-R TEST PROCEDURES (Cont'd)

COMPRESSION UNBALANCE TEST #14

Description:

This procedure compares the compression between the highest and lowest cylinders and displays the unbalance in percent. Test requires DCA hookup only.

Pre-Test Procedures:

Run confidence test. Warm up engine to operating temperature.
Run first-peak series tests 72, 73, 74, 75.

Typical Applications:

Check compression unbalance of engine with VTM powered from battery of vehicle being tested.

Possible Error Messages:

E008 VTM doesn't detect battery voltage.
E013 VTM cannot use data received.
E027 Error in entry of compression unbalance constants.
E032 Vehicle's cranking speed is varying too much for a compression unbalance measurement.

Test Procedure:

1. Set up engine to prevent starting by disconnecting wire 54A. Stop engine. Shut off fuel before cranking. Crank engine without fuel for 5 seconds to clear fuel from cylinders.
2. Set TEST SELECT switches to 14.
3. Press and release TEST button.
4. Wait until GO appears on display before proceeding.
5. When GO appears, crank engine. Display will change to ---- while engine is turning.
6. When OFF or E013 appears, stop cranking.
7. If OFF appears, wait for message to appear.
   (A) The number displayed will be the percent unbalance between the highest and lowest cylinders. A number above 25 is a failure.
   (B) If GO appears, repeat from step 2.
   (C) A FAIL message usually means compression is too far unbalanced to measure with STE/ICE.

NOTE:

If E013 appears, test data cannot be analyzed because of weak batteries or interrupted cranking during test. Correct problem and repeat from step 2.

2-46. STE/ICE-R TEST PROCEDURES (Cont'd)

FUEL SUPPLY PRESSURE (PSI) TEST #24

Description:

This procedure measures the return pressure in order to detect line blockage, leaks, or insufficient restrictor back-pressure. Test requires DCA hookup only.

Pre-Test Procedures:

Run confidence test. Wait for 1 minute after turning engine off to run this test.

Typical Applications:

Fuel supply pressure

Control Functions:

01, 02, 03, 04, 06

Test Procedure:

1. Turn off vehicle.
2. Set TEST SELECT switch to 24.
3. Press and hold TEST button until CAL appears on display.
4. Release TEST button and wait for offset value to appear on display. If offset is within -15 to 15, proceed. If not, go to DCA Troubleshooting Procedure.
5. Press and release TEST button.
6. Start engine.
7. Observe displayed value.

Possible Error Messages:

E005 Offset not performed.

2-46. STE/ICE-R TEST PROCEDURES (Cont'd)

PRESSURE (PSI) 0 TO 1,000 TEST #50

Description:

This procedure measures pressure in the 0 to 1,000 PSIG range. Test requires the use of the TK adapters and transducers.

Pre-Test Procedures:

Run confidence test.

Typical Applications:

Oil pressure

Control Functions:

01, 02, 03, 04, 06

Test Procedure:

1. Attach connector P1 of cable W4 to J2 TK or J3 TK.
2. Install blue-striped pressure transducer where pressure is to be measured. Attach connector P2 of cable W4 to transducer.
3. Set TEST SELECT switch to 50. Press and hold TEST button until CAL appears on display.
4. Release TEST button and wait for offset value to appear on display. If offset is within -150 to 150, proceed. If not, go to DCA Troubleshooting Procedure.
5. Energize system.
6. Press and release TEST button.
7. Observe displayed value.

Possible Error Messages:

E005 Offset not performed.
E002 Transducer not connected.

2-46. STE/ICE-R TEST PROCEDURES (Cont'd)

BATTERY VOLTAGE TEST #67

Description:

This procedure measures battery voltage in the 9 to 32 volts range. The voltage is measured directly at the power source of the VTM, and may be done with the vehicle operating or shut down. Test requires DCA hookup only.

Pre-Test Procedures:

Run confidence test.

Typical Applications:

Check battery voltage.

Control Functions:

01, 02, 03, 04, 06

Test Procedure:

1. Set TEST SELECT switch to 67.
2. Press and release TEST button.
3. If .9.9.9.9 is displayed, voltage is not within the test range.
4. Observe displayed value (volts).

Possible Error Messages:

None.

2-46. STE/ICE-R TEST PROCEDURES (Cont'd)

STARTER MOTOR VOLTAGE TEST #68

Description:

This procedure measures the voltage present at the starter motor positive terminal in the 0 - 32 volts range. Test requires DCA hookup only.

Pre-Test Procedures:

Run confidence test.

Typical Applications:

Check starter motor voltage.

Control Functions:

01, 02, 03, 04, 06

Test Procedure:

1. Disconnect fuel solenoid wire 54A to prevent starting.
2. Set TEST SELECT switch to 68.
3. Press and release TEST button.
4. Crank the engine and observe the displayed voltage.

Possible Error Messages:

None.

2-46. STE/ICE-R TEST PROCEDURES (Cont'd)

STARTER NEGATIVE CABLE VOLTAGE DROP TEST #69

Description:

This procedure measures the voltage drop on the starter path. A high voltage (>2V) indicates excessive ground path resistance. Test requires DCA hookup only.

Pre-Test Procedures:

Run confidence test.

Typical Applications:

Check starter negative cable voltage drop.

Control Functions:

01, 02, 03, 04, 06

Test Procedure:

1. Disconnect fuel solenoid wire 54A to prevent starting.
2. Set TEST SELECT switch to 69.
3. Press and release TEST button.
4. Crank the engine and observe the displayed voltage.

Possible Error Messages:

None.

2-46. STE/ICE-R TEST PROCEDURES (Cont'd)

STARTER SOLENOID VOLTS TEST #70

Description:

This procedure measures the voltage present at the starter solenoids positive terminal. Test requires DCA hookup only.

Pre-Test Procedures:

Run confidence test.

Typical Applications:

Check starter solenoid volts.

Control Functions:

01, 02, 03, 04, 06

Test Procedure:

1. Disconnect fuel solenoid wire 54A to prevent starting.
2. Set TEST SELECT switch to 70.
3. Press and release TEST button.
4. Crank the engine and observe the displayed voltage.

Possible Error Messages:

None.

2-46. STE/ICE-R TEST PROCEDURES (Cont'd)

STARTER CURRENT AVERAGE TEST #71

Description:

This procedure measures the average starter current in the 0 - 1,000 amps range. Test requires DCA hookup only.

Pre-Test Procedures:

Run confidence test.

Typical Applications:

Check starter current.

Control Functions:

01, 02, 03, 04, 06

Test Procedure:

1. Disconnect fuel solenoid wire 54A to prevent starting.
2. Set TEST SELECT switch to 71.
3. Press and hold TEST button until CAL appears on display.
4. Release TEST button and wait for offset value to appear on display. If offset is within -150 to 150, proceed. If not, go to DCA Troubleshooting Procedure.
5. Press and release TEST button.
6. Crank engine.
7. Observe the displayed starter current.

Possible Error Messages:

E005 Offset not performed.

2-46. STE/ICE-R TEST PROCEDURES (Cont'd)

CURRENT FIRST PEAK TEST #72

Description:

This procedure measures the overall condition of the complete starting system. Test requires DCA hookup only.

Pre-Test Procedures:

Run confidence test. Warm up engine to operating temperature. Turn off all electrical accessories.

Typical Applications:

Check condition of starting system on CI engines with VTM being powered from battery of vehicle tested.

Possible Error Messages:

E002 Transducer not connected.
E005 Offset not performed.
E008 VTM does not detect battery voltage.
E013 VTM cannot use data received.
E020 No first-peak information was detected by the VTM.
E021 VTM cannot calculate result because current is over current probe's range.

Test Procedure:

1. Disconnect fuel solenoid wire 54A to prevent starting.
2. Make sure all vehicle accessories are off.
3. Set TEST SELECT switches to 72.
4. Press and hold TEST button until CAL appears on display.
5. Release TEST button and wait for offset value to appear on display. If offset is within the range -150 to 150, proceed. If not, go to DCA Troubleshooting Procedure.
6. Press and release TEST button.
7. When GO appears on display, crank engine for 2 seconds or until one of the following appears on the display: OFF
   .9.9.9.9
   A number
   An error message
8. Observe displayed value (amps).

NOTES:

If .9.9.9.9 is displayed, current first-peak was too high and cannot be measured with VTM.

If E013 is displayed, check battery connections and correct as necessary. Repeat step 6. If E013 persists after 3 tests, VTM cannot perform test.

2-46. STE/ICE-R TEST PROCEDURES (Cont'd)

BATTERY INTERNAL RESISTANCE TEST #73

Description:

This procedure measures the internal battery resistance. Internal battery resistance is a measure of the state of the batteries. Test requires DCA hookup only.

Pre-Test Procedures:

Run confidence test. Turn off all electrical accessories.

Typical Applications:

Evaluate batteries on CI engines with VTM being powered from battery of vehicle tested.

Possible Error Messages:

E002 Transducer not connected.
E005 Offset not performed.
E008 VTM does not detect battery voltage.
E013 VTM cannot use data received.
E020 No first-peak information was detected by the VTM.
E021 VTM cannot calculate result because current is over current probe's range.

Test Procedure:

1. Disconnect fuel solenoid wire 54A from the injector pump to prevent starting.
2. Make sure all vehicle accessories are off.
3. Set TEST SELECT switches to 73.
4. Press and hold TEST button until CAL appears on display.
5. Release TEST button and wait for offset value to appear on display. If offset is within the -150 to 150 range, proceed. If not, go to DCA Troubleshooting Procedure.
6. Press and release TEST button.
7. When GO appears on display, crank engine for 2 seconds or until one of the following appears on the display: OFF
   .9.9.9.9
   A number
   An error message
8. Observe displayed value (milliohms). The limit is 25 milliohms per battery pair.
9. Test 75 is Battery Resistance Change. You can run that test after this one if desired.

NOTES:

If .9.9.9.9 is displayed, battery internal resistance was too high and cannot be measured with VTM.

If E013 is displayed, check battery connections and correct as necessary. Repeat Step 6. If E013 persists after 3 tests, VTM cannot perform test.

2-46. STE/ICE-R TEST PROCEDURES (Cont'd)

STARTER CIRCUIT RESISTANCE TEST #74

Description:

This procedure measures starter circuit resistance. Test requires DCA hookup only.

Pre-Test Procedures:

Run confidence test. Warm up engine to operating temperature. Turn off all electrical accessories.

Typical Applications:

Check resistance of complete starting system in CI engines with VTM powered from batteries of vehicle being tested.

Possible Error Messages:

E002 Transducer not connected.
E005 Offset not performed.
E008 VTM does not detect battery voltage.
E013 VTM cannot use data received.
E020 No first-peak information was detected by the VTM.
E021 VTM cannot calculate result because current is over current probe's range.

Test Procedure:

1. Disconnect fuel solenoid wire 54A to prevent starting.
2. Make sure all vehicle accessories are off.
3. Set TEST SELECT switches to 74.
4. Press and hold TEST button until CAL appears on display.
5. Release TEST button and wait for offset value to appear on display. If offset is within the range -150 to 150, proceed. If not, go to DCA Troubleshooting Procedure.
6. Press and release TEST button.
7. When GO appears on display, crank engine for 2 seconds or until one of the following appears on the display: OFF
   .9.9.9.9
   A number
   An error message
8. Observe displayed value (milliohms).

NOTES:

If .9.9.9.9 is displayed, the starter circuit resistance value was too high and cannot be measured with VTM.

If E013 is displayed, check battery connections and correct as necessary. Repeat Step 6. If E013 persists after 3 tests, VTM cannot perform test.

2-46. STE/ICE-R TEST PROCEDURES (Cont'd)

BATTERY RESISTANCE CHANGE TEST #75

Description:

This procedure measures the change of battery resistance. Test requires DCA hookup only.

Pre-Test Procedures:

Run confidence test. Warm up engine to operating temperature. Turn off all electrical accessories.

Typical Applications:

Evaluate batteries in CI engines with VTM powered from batteries of vehicle being tested.

Possible Error Messages:

E002 Transducer not connected.
E005 Offset not performed.
E008 VTM does not detect battery voltage.
E013 VTM cannot use data received.
E020 No first-peak information was detected by the VTM.
E021 VTM cannot calculate result because current is over current probe's range.

Test Procedure:

1. Disconnect fuel solenoid wire 54A to prevent starting.
2. Make sure all vehicle accessories are off.
3. Set TEST SELECT switches to 75.
4. Press and hold TEST button until CAL appears on display.
5. Release TEST button and wait for offset value to appear on display. If offset is within the -150 to 150 range, proceed. If not, go to DCA Troubleshooting Procedure.
6. Press and release TEST button.
7. When GO appears on display, engage starter for 2 seconds or until one of the following appears on the display: OFF
   .9.9.9.9
   A number
   An error message
8. Observe displayed value (milliohms/seconds). The limit is 50 milliohms per battery pair. A lower number is better than a higher one.

NOTES:

If .9.9.9.9 is displayed, the battery resistance change value is beyond the range of the VTM and cannot be measured with the VTM.

If E013 is displayed, check battery connections and correct as necessary. Repeat Step 6. If E013 persists after 3 tests, VTM cannot perform test.

2-46. STE/ICE-R TEST PROCEDURES (Cont'd)

BATTERY CURRENT TEST #80

Description:

This procedure measures current to or from the battery. Test requires DCA hookup only.

Pre-Test Procedures:

Run confidence test.

Typical Applications:

Evaluate batteries in CI engines.

Control Functions:

01, 02, 03, 04

Test Procedure:

1. Set TEST SELECT switch to 80.
2. Press and hold TEST button until CAL appears on display.
3. Release TEST button and wait for offset value to appear on display. If offset is within -150 to 150, proceed. If not, go to DCA Troubleshooting Procedure.
4. Press and release TEST button.
5. Observe displayed value (amps).

Possible Error Messages:

E005 Offset not performed.

2-46. STE/ICE-R TEST PROCEDURES (Cont'd)

DC VOLTAGE 0 TO 45 VOLTS TEST #89

Description:

This procedure measures voltage in the range of -45 to 45 volts. The VTM is used as a DC voltmeter with the decimal point in the correct position. This test must be done with the component being tested turned on. Test requires the use of the TK adapters and transducers.

Pre-Test Procedures:

Run confidence test.

Typical Applications:

- Fuel solenoid
- Starter solenoid
- Alternator output
- Any DC voltage measurement

Control Functions:

01, 02, 03, 04, 06

Test Procedure:

1. Connect test probe cable W2. Attach P1 to J4.
2. Connect the desired test leads to P2.
3. Set TEST SELECT switch to 89.
4. Short leads together. Press and hold TEST button until CAL appears on display.
5. Release TEST button and wait for offset value to appear on display.
6. If offset is within -6.8 to 6.8, proceed. If not, go to DCA Troubleshooting Procedure.
7. Press and release TEST button. Observe displayed value.

Possible Error Messages:

E005 Offset not performed.

2-46. STE/ICE-R TEST PROCEDURES (Cont'd)

DC CURRENT 0 TO 1,500 AMPS TEST #90

Description:

This procedure measures DC current in the range of 0 to 1,500 amps. The VTM is used as an ammeter with the decimal point in the right position. This test may be done with the vehicle/equipment operating. Test requires the use of the TK adapters and transducers.

Pre-Test Procedures:

Run confidence test.

Typical Applications:

- Alterator output
- Average starter current
- Battery current
- Any DC current up to 1,500 amps

Control Functions:

01, 02, 03, 04, 06

Test Procedure:

1. Connect test probe cable W4.
2. Attach P1 to J2 or J3. Connect the current probe to P2.
3. Set TEST SELECT switch to 90.
4. Clamp probe to de-energized wire.
5. Press and hold TEST button until CAL appears on display.
6. Release TEST button and wait for offset value to appear on display. If offset is within 225 to -225, proceed. If not, go to DCA Troubleshooting Procedure.
7. Energize circuit. Press and release TEST button.
8. Observe displayed value. A negative reading indicates the probe is backwards. Reverse and repeat from Step 4.

Possible Error Messages:

E002 Transducer not connected.
E005 Offset not performed.

2-46. STE/ICE-R TEST PROCEDURES (Cont'd)

RESISTANCE AND CONTINUITY 0 TO 4,500 OHMS TEST #91

Description:

This procedure measures resistance in the range of 0 to 4,500 ohms. The VTM is used as an ohmmeter, and test results are always displayed with the decimal point in the right position. Additionally, any voltage present in the device being tested will adversely affect test results. Make sure the circuit or component being tested is shut off. Test requires the use of the TK adapters and transducers.

Pre-Test Procedures:

Run confidence test.

Typical Applications:

- Continuity checks
- Resistance measurements
- Switch and relay functions

Control Functions:

01, 02, 03, 04, 06

Test Procedure:

1. Connect test probe cable W2. Attach P1 to J4.
2. Connect the desired test leads to P2.
3. Set TEST SELECT switch to 91.
4. Short leads together. Press and hold TEST button until CAL appears on display.
5. Release TEST button and wait for offset value to appear on display.
6. If offset is within -225 to 225, proceed. If not, go to DCA Troubleshooting Procedure.
7. Press and release TEST button. Observe displayed value.

Possible Error Messages:

E005	Offset not performed.
E022	External voltage detected while measuring resistance.

2-46. STE/ICE-R TEST PROCEDURES (Cont'd)

a. STE/ICE-R Description and Operation. The following describes the operation of the Simplified Test Equipment/Internal Combustion Engines-Reprogrammable (STE/ICE-R) system and contains detailed operating procedures. It is used to test the serviceability of HMMWV vehicles and to perform primary fault detection and isolation. After the technician has identified a faulty part or subsystem, he is referred to a paragraph number for replacement or repair procedures for individual parts.

b. Description and Operation. STE/ICE-R is a testing system that performs tests and measurements on internal combustion engines. STE/ICE-R measures standard voltage, current, resistance, pressure, temperature, and speed. Special tests, such as compression balance tests and starter system evaluations, are performed by STE/ICE-R. Standard equipment functions, including vacuum pressure gauge, compression gauge, low-current tester and multimeter, are features of the STE/ICE-R set. STE/ICE-R is portable and operates on either 12- or 24-volt vehicle batteries or equivalent power source. The STE/ICE-R system consists of a Vehicle Test Meter (VTM), a Transducer Kit (TK), four electrical cables, a transit case, and technical publications.

c. Vehicle Test Meter.

1. General. The VTM provides a method for the technician to test vehicle electrical and mechanical components. Readings are either pass/fail indications or digital displays in units familiar to the technician (psi, rpm, volts, ohms, amps, etc.). The Diagnostic Connector Assembly (DCA) is permanently mounted in the vehicle and provides accessibility to the most frequently needed test points. The use of the VTM through the DCA is referred to as DCA mode. The VTM interfaces with the vehicle directly with a transducer(s) from the Transducer Kit (TK). The use of the VTM through the TK is referred to as TK mode. The DCA and the TK can be used at the same time. This may be necessary when the diagnostic connector assembly has a missing transducer. If a transducer is missing, a no sensor indication (E002) is displayed when a measurement is made. If this happens, the TK mode can be used to make the measurement. The use of the VTM through the DCA and TK is referred to as the combined mode. Additional tests can be done that involve manually probing and/or connecting transducers to appropriate test points. Operating power for the VTM is drawn from the vehicle batteries or some equivalent battery source. Power is routed to the VTM through the DCA connected to the battery. The STE/ICE-R general purpose testing capabilities that may be applied to the vehicle are: 0-1,000 psi pressure, 0-45 volts DC, and 0-40k ohms resistance. The following control functions can be performed in conjunction with the special tests: Interleave (displays rpm with next test), Display Maximum Value, Display Minimum Value, and Display Peak-to-Peak Value.

2. Controls and Indicators. The controls and readout display on the VTM are illustrated. The following paragraphs describe how the controls are used and how the display functions:

(a) Power Switch (PUSH ON/PULL OFF). The power switch controls DC power to the VTM. The VTM can operate from a 12-or 24-volt battery system. When the power switch is pushed in (PUSH ON), the VTM power is on. To shut the VTM off, pull out the power switch (PULL OFF). The power switch contains a 4-amp circuit breaker. The power switch will pop out automatically if something is wrong which causes the VTM to use more power than it should. If the switch pops out, check your hookup carefully and try again before returning the VTM to direct support maintenance.

(b) TEST SELECT Switches. The TEST SELECT switches are used to select the actual test to be performed. There are 10 positions on each switch numbered 0 through 9. The number dialed into these switches is read by the VTM when you press the test button. Changing the TEST SELECT switch positions has no effect until the TEST button is pushed.

(c) TEST Button. Depressing and releasing the TEST button causes the test measurement to begin. Observe the measured value on the readout display. The reading will be in units normally used for the particular vehicle measurement. These units are listed on the flip cards. The TEST button must be pressed and immediately released. Depressing and holding the TEST button down initiates an offset test. Offset tests are described in TM 9-4910-571-12&P.

2-46. STE/ICE-R TEST PROCEDURES (Cont'd)

(d) **Readout Display.** The readout display will show different types of readouts during testing up to a maximum of four characters (for example, .8.8.8.8). The types of readouts are described in detail in paragraph 3 and are summarized as follows:

(1) **Status Readout.** This type of readout keeps the technician informed of what is happening, such as power applied, failed test, etc.

(2) **Numerical Readout.** This type of readout is the measured value in units of the measurement being made. If you are measuring 0-45 volts DC, the number 24 on the display indicates 24 volts.

(3) **Error Readout.** This type of readout indicates that the wrong test number was selected, the transducer is not connected, or the VTM is faulty.

(e) **Flip Cards.** The flip cards list the 2-digit test number system for selecting the various tests. The cards also summarize the test and operating instructions contained herein.

(f) **Power/DCA Connector J1.** Connector J1 connects the VTM to either a vehicle diagnostic connector using the DCA cable or to the vehicle batteries using the power cable. Operating power and signals from the installed transducers are supplied to the VTM through the DCA cable.

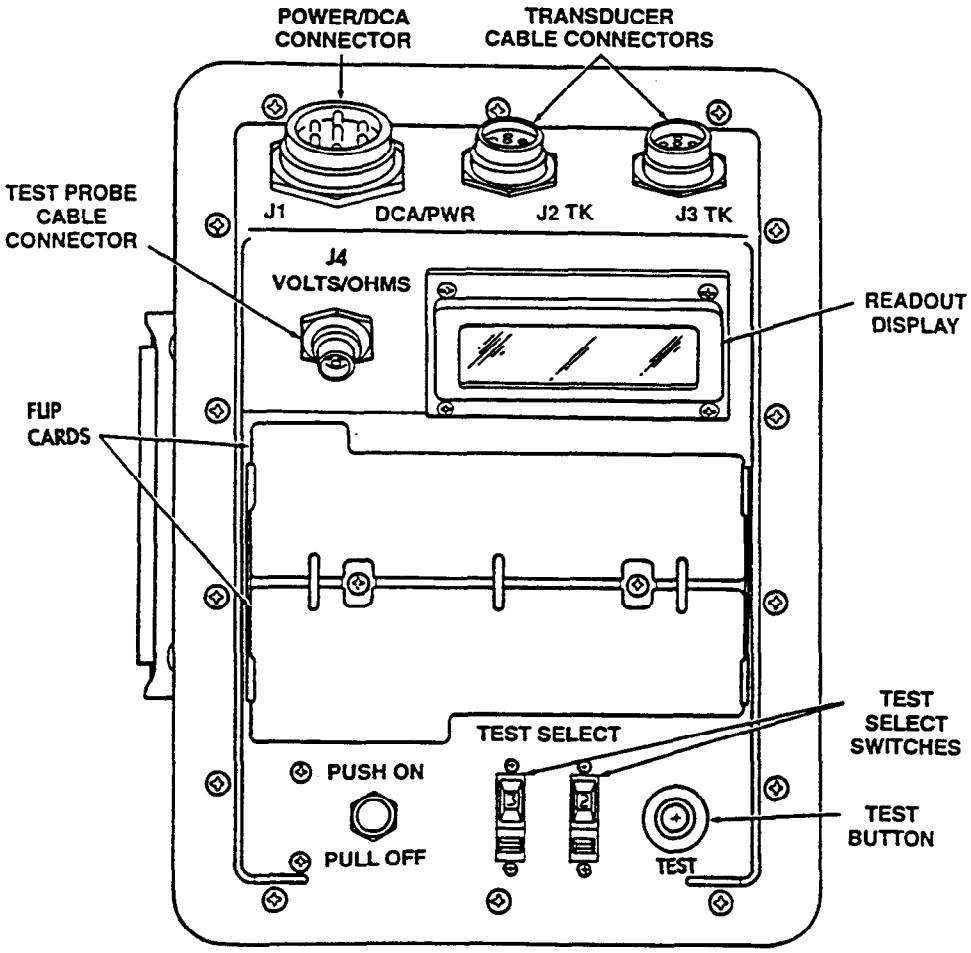

VTM CONTROLS AND READOUT DISPLAY

2-46. STE/ICE-R TEST PROCEDURES (Cont'd)

(g) **Transducer Cable Connectors J2, J3.** Connectors J2 or J3 connect the VTM to any transducer in the transducer kit. Operating power is supplied to the transducer and signals from the transducers are supplied to the VTM through the cable. Connectors J2 and J3 are identical and can be interchanged with each other or used in combination.

(h) **Test Probe Cable Connector J4.** Connector J4 connects test leads to the VTM when doing manual voltage resistance tests.

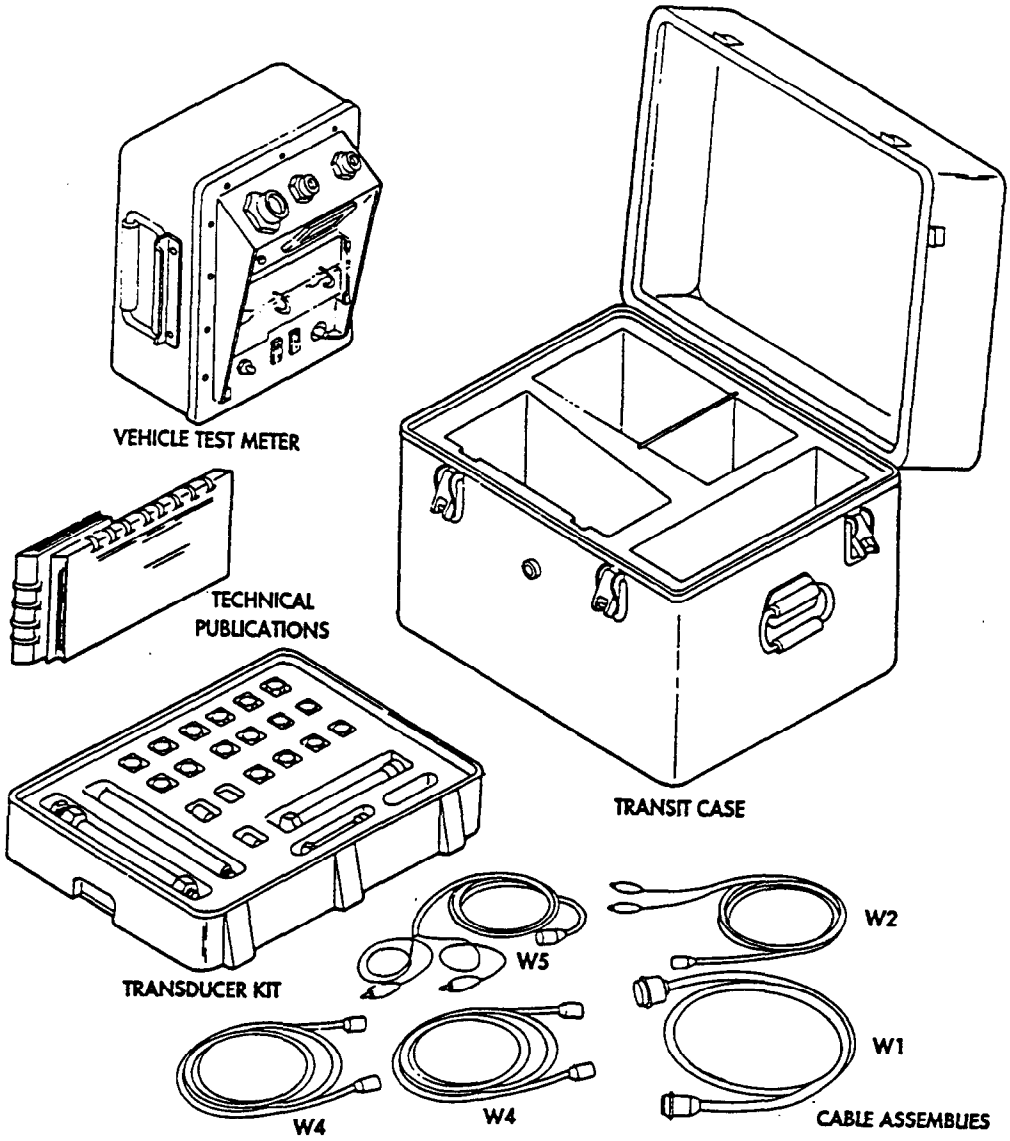

SIMPLIFIED TEST EQUIPMENT/INTERNAL COMBUSTION ENGINE-REPROGRAMMABLE (STE/ICE-R SYSTEM)

2-46. STE/ICE-R TEST PROCEDURES (Cont'd)

3. Readouts. The following paragraphs describe the different types of readouts that can occur during testing.

(a) Status Readout. A status readout keeps the technician informed about what is happening. For example, .8.8.8.8 is displayed each time the power switch is pushed on. It means that power is applied, and that all elements of the display are operative. It changes to --- 1.5 seconds later, indicating that the VTM is ready to be used for testing. The status readout displays are described in table 2-2.

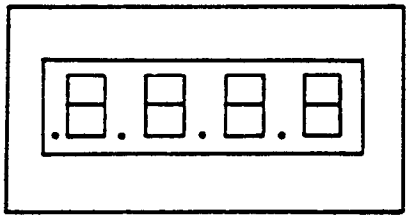

(b) Prompting Message. A prompting message is a technician action message. It is a signal for you to do something such as crank the engine. For example, UEH tells you to enter the vehicle type identification number into the VTM. After the technical action is performed, the test will automatically continue. Prompting messages are listed in table 2-3.

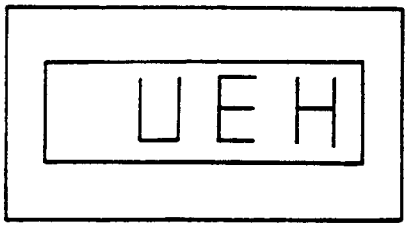

(c) Numerical Readout. A numerical readout is the measured value in units of the measurement being made. For example, if you are measuring 0-45 volts DC, 12.7 is volts DC. If you are measuring 0-25 psig pressure, 12.7 is psig. The units for each test are listed on the flip card. The numbers displayed in the VTM are always positive unless there is a minus shown to make them negative.

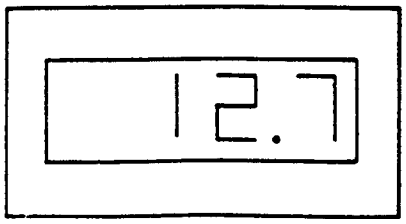

2-46. STE/ICE-R TEST PROCEDURES (Cont'd)

(d) **Error Readout.** E001 is a typical error readout. There are 15 different readouts. All error readouts start with E. An error readout is a warning that you forgot to connect the transducer, selected a wrong test number, failed to start the engine, etc. All of the error messages mean you must correct the problem before continuing testing. Error readouts are listed in table 2-4. If the error message does not go away after corrective action, refer to TM 9-4910-571-12&P.

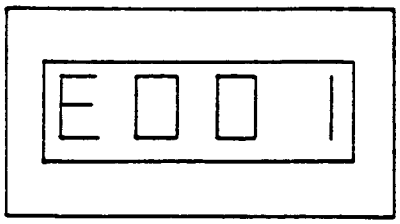

(e) **Confidence Error Readouts.** C004 is a typical error readout resulting from the detection of a faulty VTM during confidence test. For detailed information concerning confidence error readouts, refer to TM 9-4910-571-12&P.

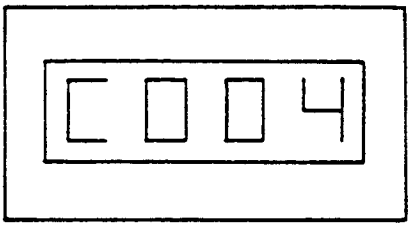

Table 2-2. Status Readouts.

VTM Readout	Interpretation
.8.8.8.8	A readout of .8.8.8.8 appears for 1 to 2 seconds each time the power is applied to the VTM. It means that there is power to the VTM, and that all elements of the readout display are operative.
----	A readout of ---- indicates the following: (1) After power turn-on, it signifies that the VTM is ready for testing. (2) During a compression unbalance test, it signifies testing is in progress.
.9.9.9.9	A readout of .9.9.9.9 indicates that the VTM is reading a test value beyond the range of its measurement capability. Either (1) the wrong test number is selected for the parameter being measured, or (2) there is a fault in the vehicle.
PASS FAIL	A PASS or FAIL readout is the result of a test that checks the condition of a component being measured. A PASS/FAIL readout means just that — the component either passes or fails the test.

2-46. STE/ICE-R TEST PROCEDURES (Cont'd)

Table 2-3. Prompting Messages.

VTM Readout	Interpretation
UEH	Signal to ECT switches. Vehicle Identification (VID) numbers are found under TEST DATA on the flip card on the vehicle test cards.
GO	Signal to technician to crank engine in compression balance or first-peak tests.
OFF	Signal to technician to stop cranking in compression balance test or to release the accelerator in the CI power test.
CAL	Signal to the technician to release the TEST button during an offset test.
66	Numbers are used for prompting messages in several tests. In confidence test, a readout of 66 signals the technician to enter 99. In test no. 12, the first numerical readout signals the technician to shut off fuel.

Table 2-4. Error Readouts.

VTM Readout	Interpretation
E000	Occurs if you request the VTM for information it does not have. For example, if you request the VID and it has not been entered.
E001	Occurs in either the DCA or TK mode of operation. It indicates that a non-existent test number has been dialed into the TEST SELECT switches.
E002	Indicates that the required transducer is not connected.
E003	Indicates that a test number has been dialed which does not apply to the vehicle under test. It can only occur in the DCA mode.
E004	Indicates that a VID number or number of cylinders information has not been entered.
E005	Indicates that the transducer offset test was not performed.
E007	Indicates a conflict between the VID number dialed in and the number of cylinders dialed in. It may occur in response to either VID entry or number-of-cylinders entry.
E008	Indicates the VTM is not receiving the required voltage signal for the test selected. This error code is related only to starter and compression balance tests.
E009	Indicates that the engine was not running at the start of the test.
E010	Indicates that a wrong VID was dialed into the VTM.
E011	Indicates that throttle control was operated incorrectly during power test, taking too much time to either accelerate or decelerate.
E013	Indicates bad data were taken for the test in progress. Repeat the test once.
E014	Indicates that a wrong number of cylinders was dialed into the VTM.
E018	Indicates that an engine rpm or AC frequency test was terminated automatically to protect the VTM. Termination is only after several minutes of no-signal operation. Most likely the VTM was left on the vehicle and the engine stalled.

2-46. STE/ICE-R TEST PROCEDURES (Cont'd)

d. Cable Assemblies.

1. **General.** The cable assemblies are shown below and are referred to by the cable number and by a name which describes how the cable is used. If necessary, the two transducer cables (W4) can be joined with the adapter supplied in the transducer kit to make one long cable.

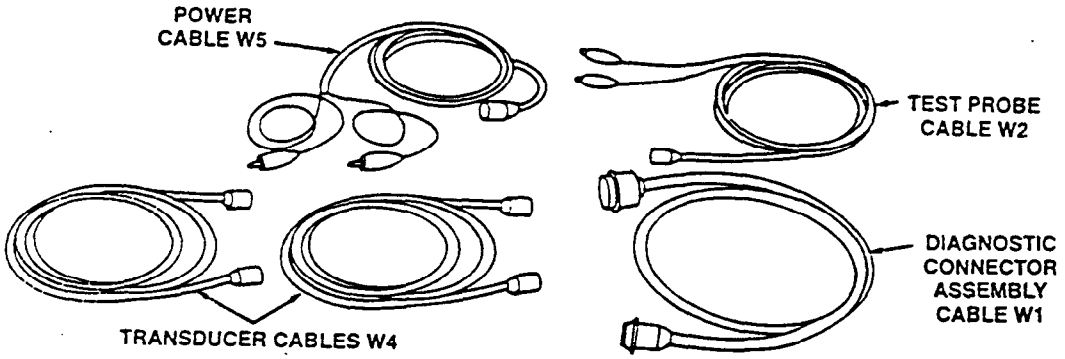

CABLE ASSEMBLIES

2. **Installation.** When cables are connected, large key on the cable connector mates with a keyway on the transducer connector or the VTM connector for proper installation. If you experience any difficulty during testing and suspect that a cable is bad, refer to TM 9-4910-571-12&P for checking cable continuity.

Table 2-5. Transducer Kit Components.

ITEM NO.	TK NO.	PART NO.	QTY	ITEM
1	10	11669227	1	Hose and fitting assy (spark plug adapter)
2	11	12258878	1	Current probe
3	12	12258853-1	1	Pipe thread reducer, 3/4 MPT to 1/4 FPT
4	13	12258853-3	1	Pipe thread reducer, 1/2 MPT to 1/4 FPT
5	14	12258853-2	2	Pipe thread reducer, 3/8 MPT to 1/4 FPT
6	15	444620	1	Hex-head plug, 1/4 MPT
7	16	5327970	1	Hex-head plug, 1/8 MPT
8	17	12258876	1	Pressure transducer, 0-1000 psig
9	21	12258881	1	Snubber
10	20	3204X2	2	Adapter, 1/8 MPT to 1/4 FPT
11	19	3304X2	1	Coupling reducer, 1/8 FPT to 1/4 FPT
12	18	234X5	1	Male connector, 5/16 tube to 1/4 MPT
13	22	12258877	1	Pressure transducer, -30 in. Hg to 25 psig
14	23	444152	1	Street tee, 1/2 pipe thread
15	24	3750X4	1	Street tee, 1/4 pipe thread
16	25	547002	1	Street tee, 1/8 pipe thread
17	26	12258879-2	1	Street elbow, 1/4 pipe thread
18	27	12258879-1	1	Street elbow, 1/8 pipe thread
19	34	12258875	1	Pulse tachometer
20	32	12258880	1	Fuel line adapter
21	31	MS53099-2	1	Tachometer drive adapter
22	30	7540877	1	Ignition adapter
23	29	MS3119E14-19	1	Adapter (connector-to-connector)
24	28	12258762	1	Tee, inverted flare
25	33	8840543	1	Air chuck
26	35	11669236	1	Hose assembly, 1/8 MPT
27	36	12258852	1	Pipe nipple, 1/8 MPT

2-46. STE/ICE-R TEST PROCEDURES (Cont'd)

1. **General.** The transducer kit contains a pulse tachometer transducer, a pressure and a vacuum transducer, and the necessary adapters (bushing, plugs, tees, etc.). Also included in the kit is a current probe for measuring current and a test probe cable for measuring voltage and resistance.

Not all fittings have part number markings. The legend will help to identify the items.

Before installing any transducer kit item on the vehicle, be sure to clean the mounting surfaces. This is particularly important if you are going to open fuel lines or tap into manifolds. Dirt particles entering the engine can cause damage to both the engine and the transducer kit item.

The transducers should kept clean, free of dirt and grease, and handled with reasonable care.

2. **Pressure Transducer.** The pressure transducers have a small breather hole on the side of the housing which should be kept unplugged. Do not use high pressure.

3. **Pulse Tachometer.** Make sure that the slotted hole in the engine tachometer driveshaft is clear and not hard-packed before installing the pulse tachometer.

4. **Threaded Adapters.** Observe threaded fittings carefully to avoid engaging straight threads with pipe threads. Each measurement device (transducer) in the transducer kit has its own identification resistor. The VTM uses this identification resistor to check that the correct transducer is connected for the measurement being made. If the correct transducer is not connected, error code E002 will be displayed.

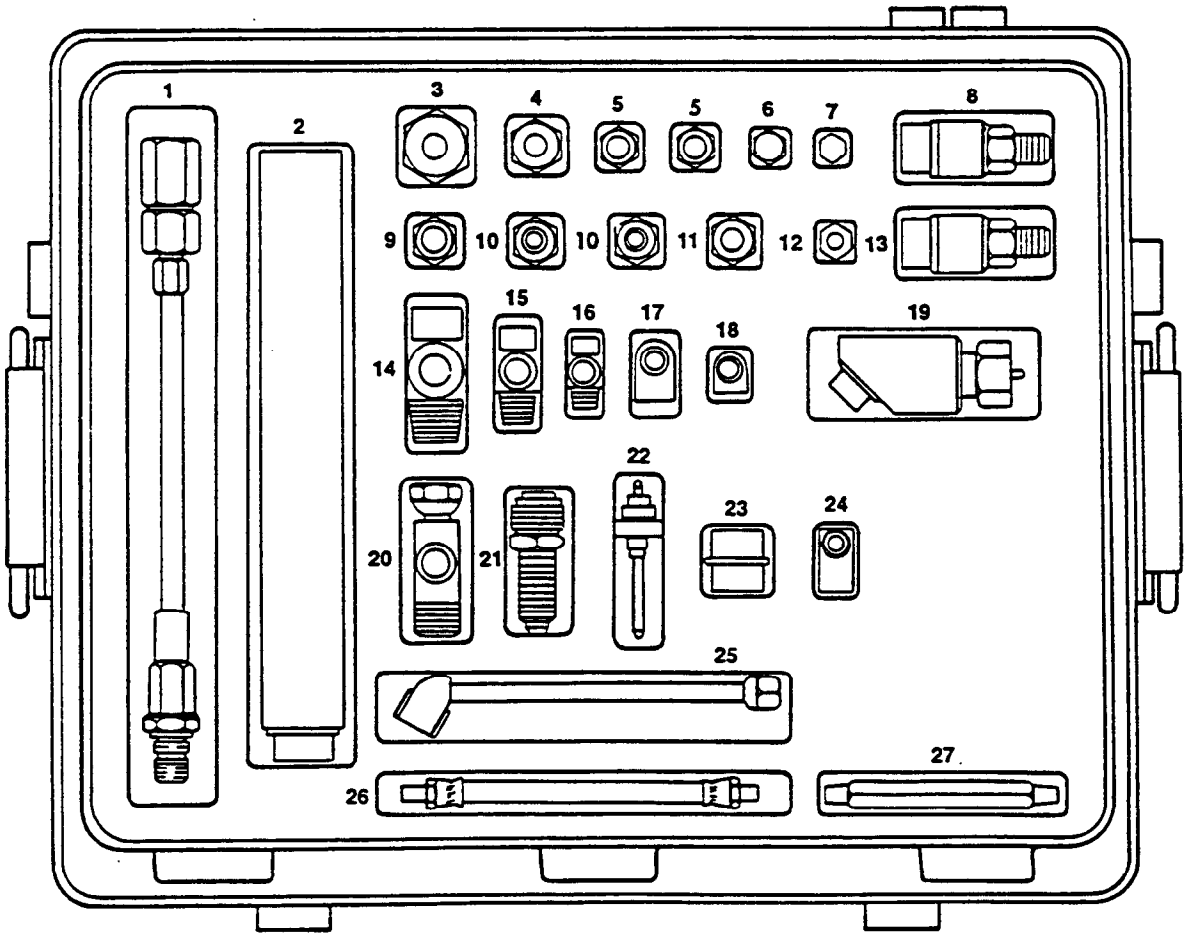

TRANSDUCER KIT

2-47. VEHICLE TESTING

a. General. To troubleshoot a vehicle problem, the technician can use the STE/ICE-R (vehicle test meter and transducers) and the vehicle test card.

b. Data Entry Tests. For information regarding Data Entry, Cylinder Entry, VID Entry, and Data Display Tests, refer to TM 9-4910-571-12&P.

c. Offset Tests. The STE/ICE-R VTM performs a test by setting the TEST select switches to the test number and pressing the TEST button. For some tests, an offset test is required before the test itself can be performed. This is done by selecting the number of the desired test and holding the TEST button down for several seconds.

The offset test nullifies characteristic differences in the VTM, test leads, and transducers. It zeros the meter. Once the offset is performed, the VTM automatically corrects for the offset before displaying measured values. The displayed offset value should be checked against limits on the vehicle test card. If the displayed value is outside these limits, either the transducer or the test cable is faulty and must be replaced. This is another form of self-test. The offset is performed when each transducer is connected. All tests requiring offset are identified by an asterisk (*) on the flip cards and by OFFSET LIMITS on the vehicle test cards. The offset test is performed with the test probe cable or transducer connected to the VTM. Care should be taken to see that no stimulus is applied to the transducer. Test probe cable leads should be shorted together. To perform an offset test, dial the test number into the TEST SELECT switches. Press and hold the TEST button until the prompting message CAL appears on the display. A few seconds after release of the TEST button, a number will appear. This is the measured offset value associated with the test probe cable or transducer and cable.

d. Control Tests. These tests are used to change (or control) the way a vehicle test is displayed or the way it is run. There are four control tests:

01 Interleave (displays rpm with next test).

02 Display Minimum Value for next test.

03 Display Maximum Value for next test.

04 Display Peak-to-Peak Value for next test.

Control tests 01, 02, 03, and 04 specify the action to be taken by the next test only. A subsequent test will reset the control.

1. Interleave (Test 01). This test alternately measures engine speed and a second parameter such as fuel pressure or alternator voltage. To initiate interleave, dial 01 into the TEST SELECT switches and press and release the TEST button. The prompting message PASS will signal the technician to dial in the second test number and again press and release the TEST button.

2. Minimum Value (Test 02). This test displays the minimum value measured during a test. To initiate a minimum value display, dial 02 into the TEST SELECT switches and press and release the TEST button. The prompting message PASS will signal the technician to dial in the desired test number and again press and release the TEST button. The minimum value is displayed and updated whenever a lower minimum value is measured. Entering 02 and the test number again will reset the process and a new minimum value will be displayed.

2-47. VEHICLE TESTING (Cont'd)

3. **Maximum Value (Test 03).** This test displays the maximum value measured during a test. To initiate a maximum value display, dial 03 into the TEST SELECT switches and press and release the TEST button. The prompting message PASS will signal the technician to dial in the desired test number and again press and release the TEST button. The maximum value is displayed and updated whenever a higher maximum value is measured. Entering 03 and the test number again will reset the process and a new maximum value will be displayed.

4. **Peak-to-Peak Value (Test 04).** This test displays the peak-to-peak value of 0-45 volts DC (89), 0-1,500 amps DC (90), and battery volts (67). To start a peak-to-peak measurement, dial 04 into the TEST SELECT switches and press the TEST button. The prompting message PASS will signal the operator to dial in one of the three numbers (89, 90, 67) and again press the TEST button.

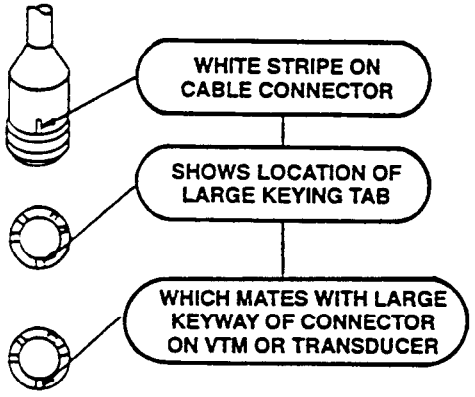

CONNECTOR KEY LOCATION

Table 2-6. STE/ICE-R GO-Chain Tests.

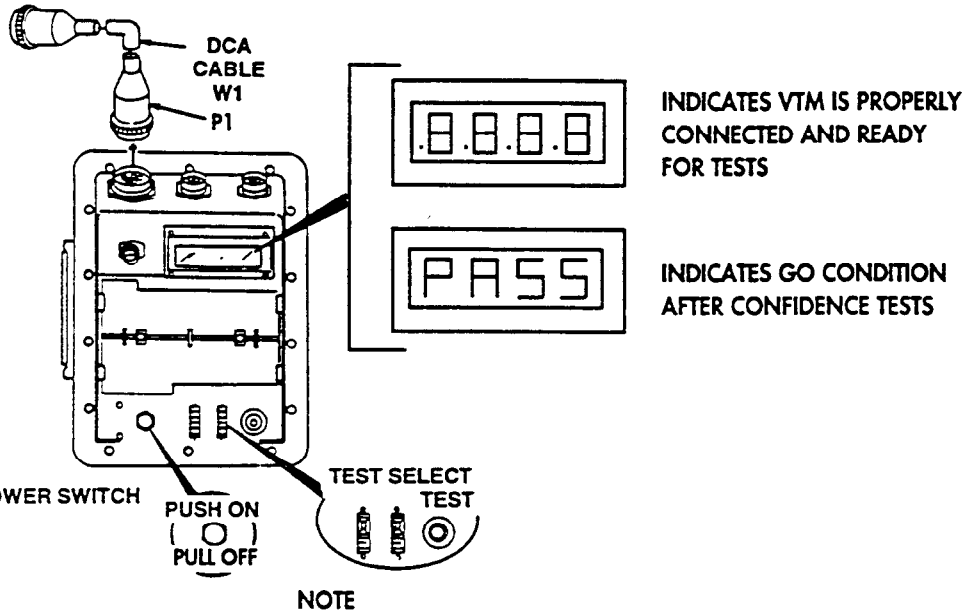

GO-CHAIN

NOTE

Perform all GO steps until a NO-GO condition exists, then perform the NO-GO step indicated.

G01 — DCA MODE

CAUTION

- Do not connect or disconnect the VTM while the vehicle is running.
- Connect DCA cable to the VTM before connecting to the diagnostic connector.

1 CONNECT VTM TO VEHICLE DIAGNOSTIC CONNECTOR:

- PULL OFF the VTM power switch.
- Connect DCA cable to the VTM.
- Connect DCA cable to the vehicle.
- PUSH ON the VTM power switch.
- Verify that the display indicates .8.8.8.8 for approximately 2 seconds and then changes to - - - -.

- Does the VTM display .8.8.8.8 and then change to - - - - ?

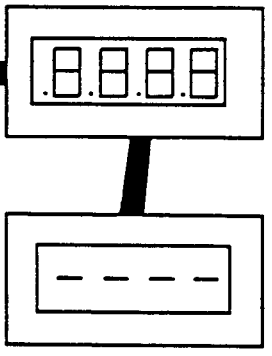

AFTER 2 SECONDS

YES

- Proceed to step 3.

3

NO

- Proceed to following page.

Table 2-6. STE/ICE-R GO-Chain Tests (Cont'd).

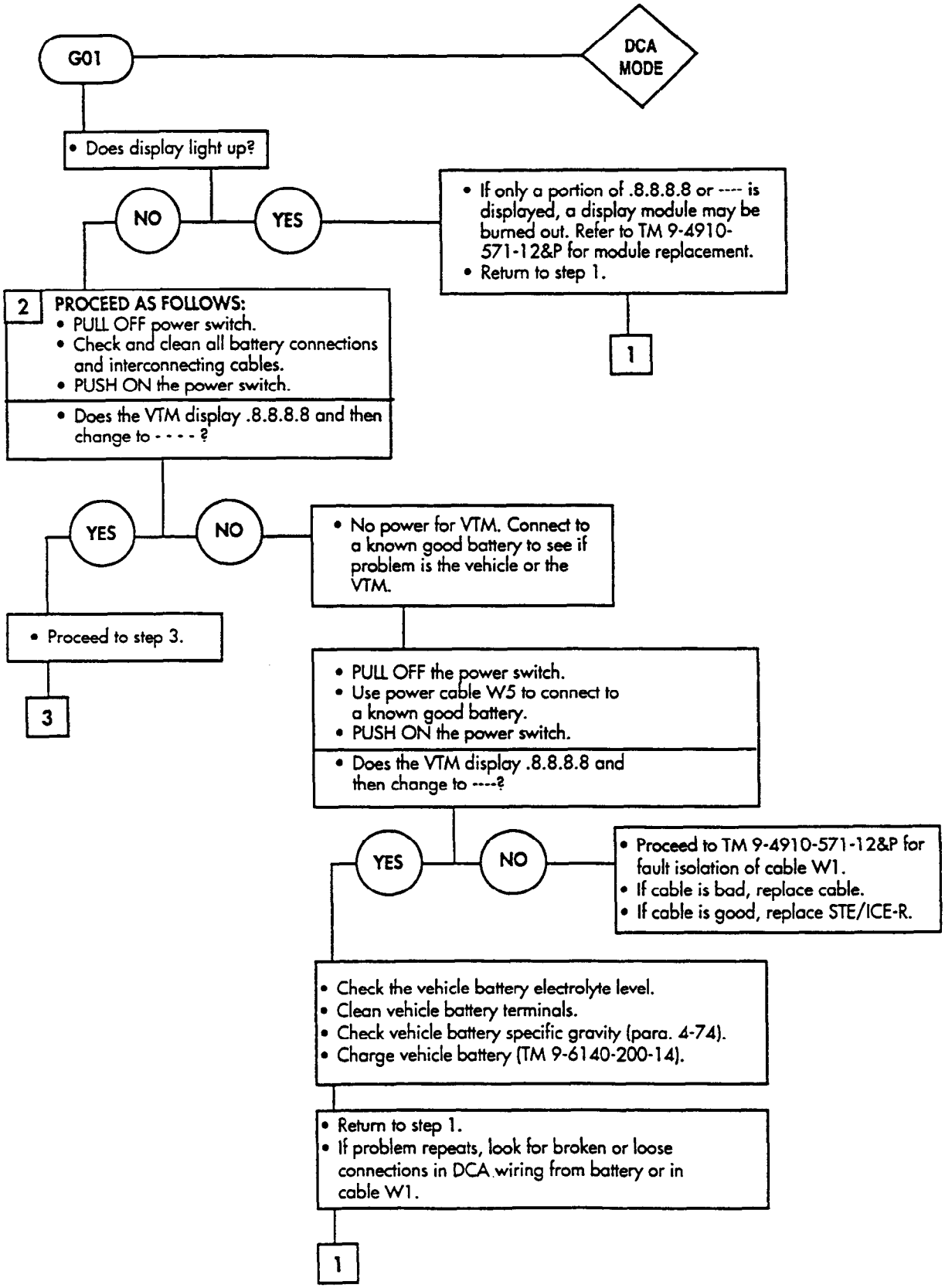

Table 2-6. STE/ICE-R GO-Chain Tests (Cont'd).

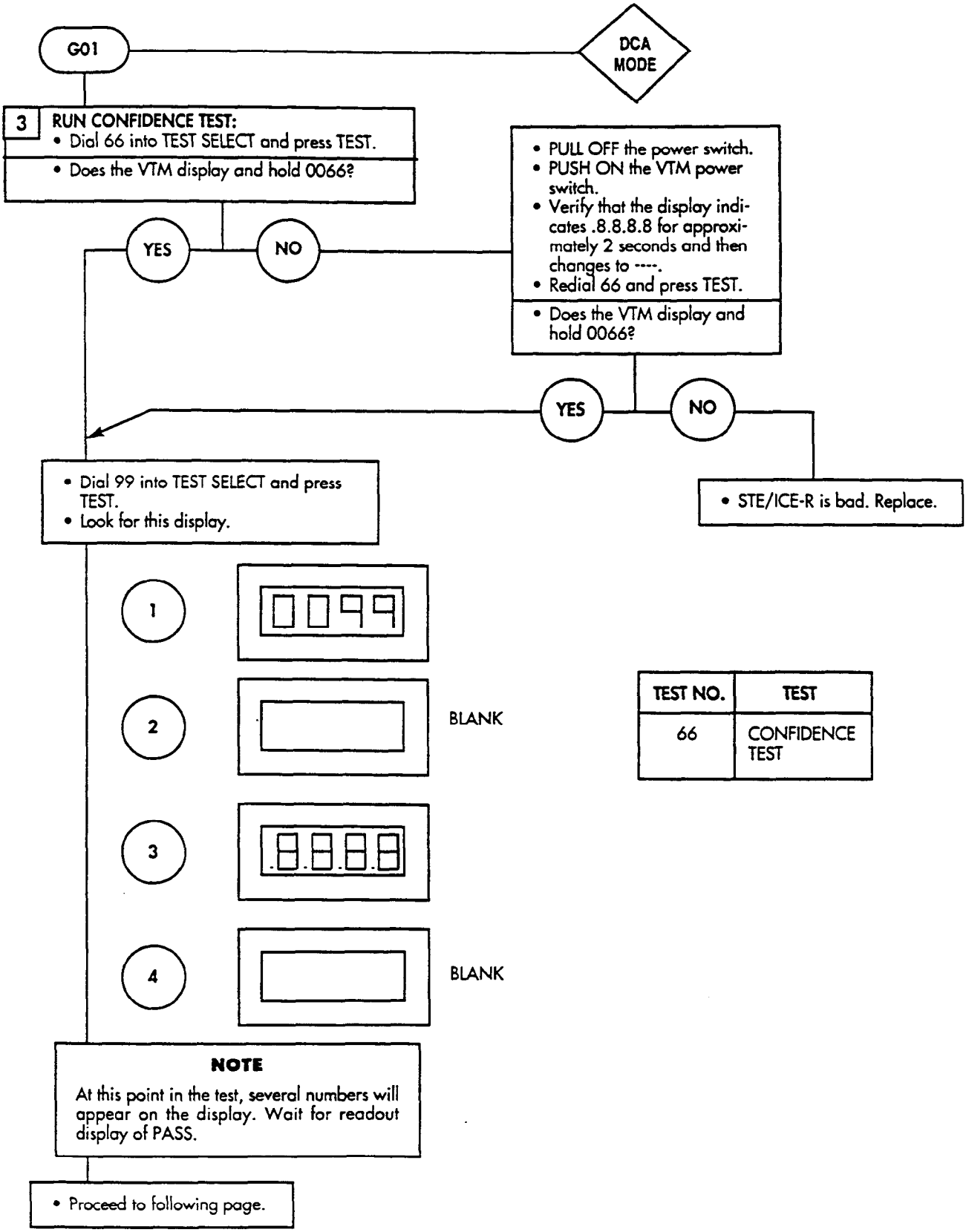

TEST NO.	TEST
66	CONFIDENCE TEST

Table 2-6. STE/ICE-R GO-Chain Tests (Cont'd).

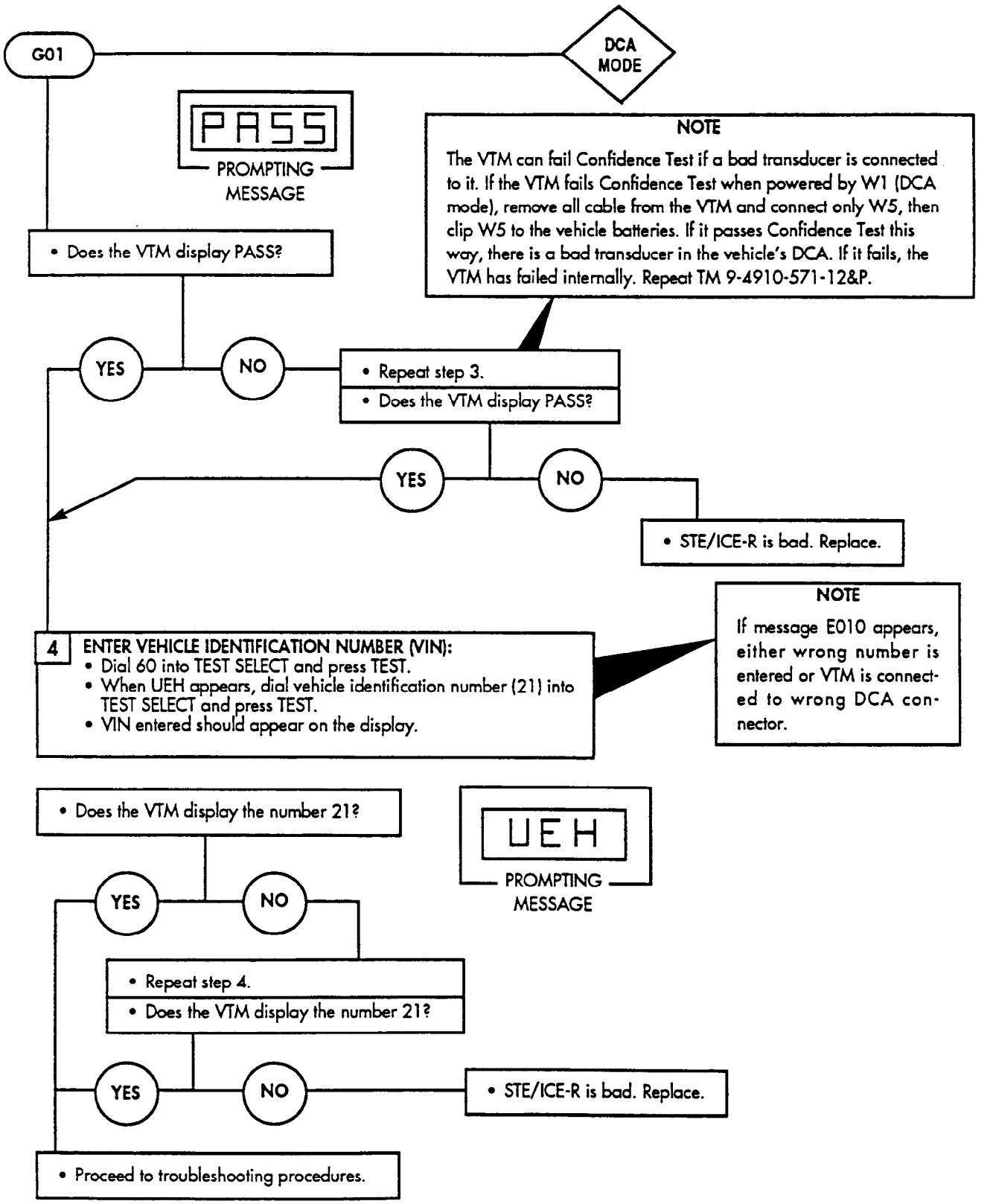

CHAPTER 3
ENGINE SYSTEMS (UNIT) MAINTENANCE

Section I. LUBRICATION SYSTEM MAINTENANCE

3-1. LUBRICATION SYSTEM MAINTENANCE TASK SUMMARY

TASK PARA.	PROCEDURES	PAGE NO.
3-2.	Engine Oil Dipstick Tube Replacement	3-2
3-3.	Engine Oil Filler Tube Maintenance	3-4
3-4.	Engine Oil Filter Adapter Maintenance	3-5
3-5.	Engine Oil Service	3-6
3-6.	Oil Pan Replacement	3-8
3-7.	Engine Oil Cooler Supply and Return Lines Maintenance	3-10
3-8.	Engine, Transmission, and Power Steering Oil Cooler Assembly Maintenance	3-12
3-9.	Crankcase Depression Regulator (CDR) Valve and Bracket Maintenance	3-16
3-10.	CDR Valve Hoses Replacement	3-20

3-2. ENGINE OIL DIPSTICK TUBE REPLACEMENT

This task covers:

a. Removal **b. Installation**

INITIAL SETUP:

Tools

General mechanic's tool kit:
automotive (Appendix B, Item 1)
Maintenance and repair shop equipment:
automotive (Appendix B, Item 2)

Materials/Parts

O-ring (Appendix G, Item 216)
Nut and lockwasher assembly
(Appendix G, Item 197)
Silicone compound (Appendix C, Item 74)

Manual References

TM 9-2320-387-10
TM 9-2320-387-24P

Equipment Condition

Hood raised and secured (TM 9-2320-387-10).

Maintenance Level

Unit

a. Removal

1. Remove oil dipstick (7) from oil dipstick tube (6).
2. Remove nut and lockwasher assembly (5) and capscrew (2) from harness clamp (3) and upper dipstick tube bracket (8). Discard nut and lockwasher assembly (5).
3. Remove two screw-assembled washers (4) from upper dipstick tube bracket (8) and fuel line bracket (1).
4. Remove oil dipstick tube (6) from engine oil pan (10).
5. Remove and discard O-ring (9).

b. Installation

1. Apply RTV silicone compound to O-ring (9) and install O-ring (9) on oil dipstick tube (6).
2. Install oil dipstick tube (6) in engine oil pan (10).
3. Install upper dipstick tube bracket (8) on fuel line bracket (1) with two screw-assembled washers (4). Tighten screw-assembled washers (4) to 3-4 lb-ft (4-5 N·m).
4. Secure harness clamp (3) to upper dipstick tube bracket (8) with capscrew (2) and nut and lockwasher assembly (5).
5. Install oil dipstick (7) into oil dipstick tube (6).

3-2. ENGINE OIL DIPSTICK TUBE REPLACEMENT (Cont'd)

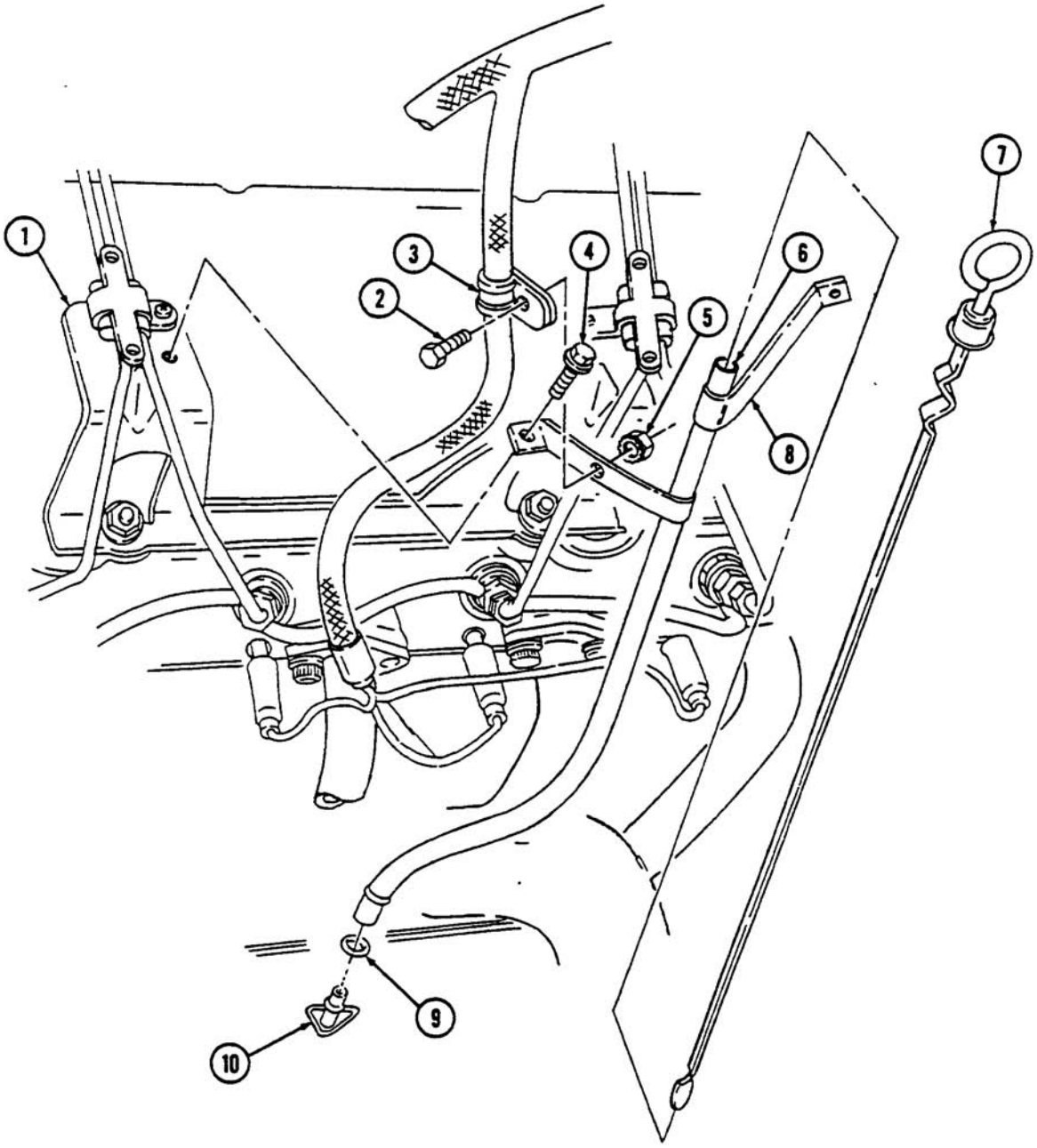

FOLLOW-ON TASKS:
- Start engine (TM 9-2320-387-10) and check for oil leaks.
- Lower and secure hood (TM 9-2320-387-10).

3-3. ENGINE OIL FILLER TUBE MAINTENANCE

This task covers:

a. Removal
b. Inspection
c. Installation

INITIAL SETUP:

Tools
General mechanic's tool kit:
automotive (Appendix B, Item 1)
Maintenance and repair shop equipment:
automotive (Appendix B, Item 2)

Materials/Parts
Lubricating oil (Appendix C, Item 44)

Manual References
TM 9-2320-387-10
TM 9-2320-387-24P

Equipment Condition
Hood raised and secured (TM 9-2320-387-10).

Maintenance Level
Unit

a. Removal

1. Loosen clamp (2) and disconnect CDR valve hose (1) from engine oil filler tube (3).
2. Remove two nuts (4), washers (5), and engine oil filler tube (3) from timing chain cover (7) and studs (8).

b. Inspection

Inspect grommet (6) for breaks or cracks. Replace if defective.

c. Installation

1. Coat grommet (6) with lubricating oil.
2. Install engine oil filler tube (3) on timing chain cover (7) and studs (8) with two washers (5) and nuts (4). Tighten nuts (4) to 13-20 lb-ft (18-27 N·m).
3. Connect CDR valve hose (1) to engine oil filler tube (3) and tighten clamp (2).

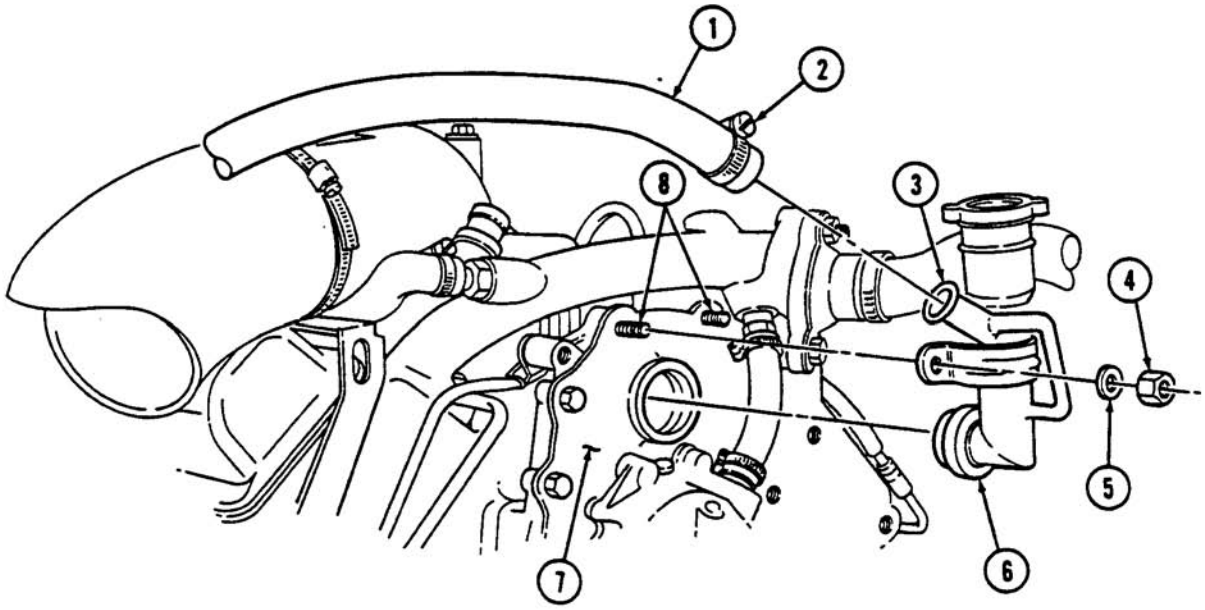

FOLLOW-ON TASK: Lower and secure hood (TM 9-2320-387-10).

3-4. ENGINE OIL FILTER ADAPTER MAINTENANCE

This task covers:

a. Removal
b. Inspection
c. Installation

INITIAL SETUP:

Tools

General mechanic's tool kit:
automotive (Appendix B, Item 1)
Maintenance and repair shop equipment:
automotive (Appendix B, Item 2)

Materials/Parts

Gasket (Appendix G, Item 45)
Two O-rings (Appendix G, Item 217)
O-ring (Appendix G, Item 203)

Manual References

TM 9-2320-387-24P

Equipment Condition

Engine oil filter removed (para. 3-5).

Maintenance Level

Unit

a. Removal

1. Remove adapter bolt (6), gasket (5), two O-rings (4), engine oil filter adapter (3), and O-ring (1) from cylinder block (2). Discard O-ring (1), two O-rings (4), and gasket (5).
2. Remove reducer boss (7) from oil filter adapter (3).

b. Inspection

Inspect reducer boss (7) for damaged threads or cracks. Replace if defective.

c. Installation

1. Install reducer boss (7) on oil filter adapter (3) and tighten to 25 lb-ft (34 N·m).
2. Install O-ring (1) and engine oil filter adapter (3) on cylinder block (2) with two O-rings (4), gasket (5), and adapter bolt (6). Tighten adapter bolt (6) to 50 lb-ft (68 N·m).

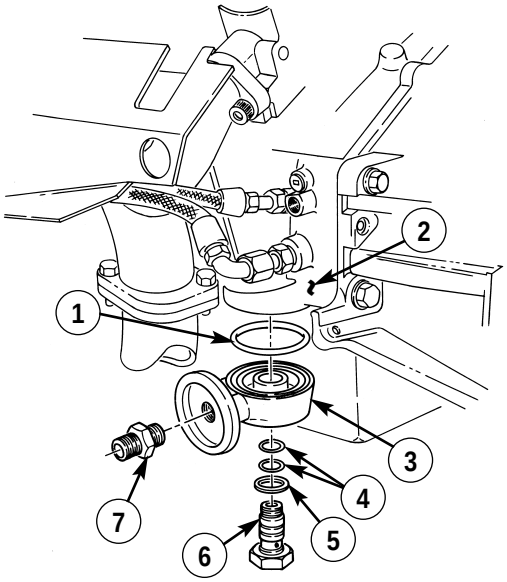

FOLLOW-ON TASK: Install engine oil filter (para. 3-5).

3-5. ENGINE OIL SERVICE

This task covers:

a. Oil Draining
b. Filter Removal
c. Filter Installation
d. Oil Replenishing

INITIAL SETUP:

Tools

General mechanic's tool kit:
automotive (Appendix B, Item 1)
Maintenance and repair shop equipment:
automotive (Appendix B, Item 2)

Materials/Parts

Oil filter (Appendix G, Item 199)
Lubricating oil (Appendix C, Item 44)

Manual References

TM 9-2320-387-10
TM 9-2320-387-24P

Equipment Condition

Hood raised and secured (TM 9-2320-387-10).

General Safety Instructions

Do not drain oil when engine is hot.

Maintenance Level

Unit

a. Oil Draining

WARNING

Do not drain oil when engine is hot. Severe injury to personnel may result.

NOTE

- Park vehicle on a firm, level surface.
- Have drainage container ready to catch oil.

1. Remove drainplug (5) and gasket (4) from oil pan (3). Allow oil to drain completely.
2. Install gasket (4) and drainplug (5) on oil pan (3). Tighten drainplug (5) to 20 lb-ft (27 N·m).

b. Filter Removal

NOTE

Have drainage container ready to catch oil.

Remove oil filter (1) from filter adapter (2). Discard filter (1).

c. Filter Installation

1. Apply a light coat of oil to filter gasket prior to installation.
2. Install oil filter (1) on oil filter adapter (2) until gasket contacts filter adapter (2). Tighten an additional 1/2-3/4 turn by hand.

d. Oil Replenishing

CAUTION

Install a non-vented filler cap only. An incorrect filler cap will not seal properly, allowing water to enter and damage engine.

1. Remove filler cap (6) from filler tube (7). Fill with oil according to TM 9-2320-387-10.
2. Install filler cap (6) on filler tube (7).

3-5. ENGINE OIL SERVICE (Cont'd)

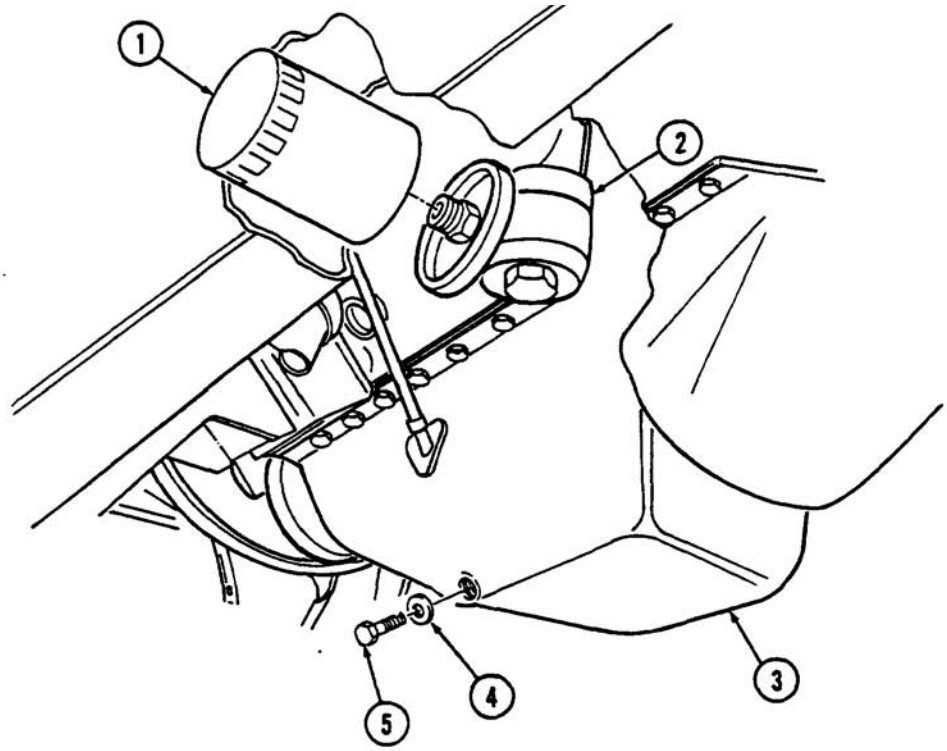

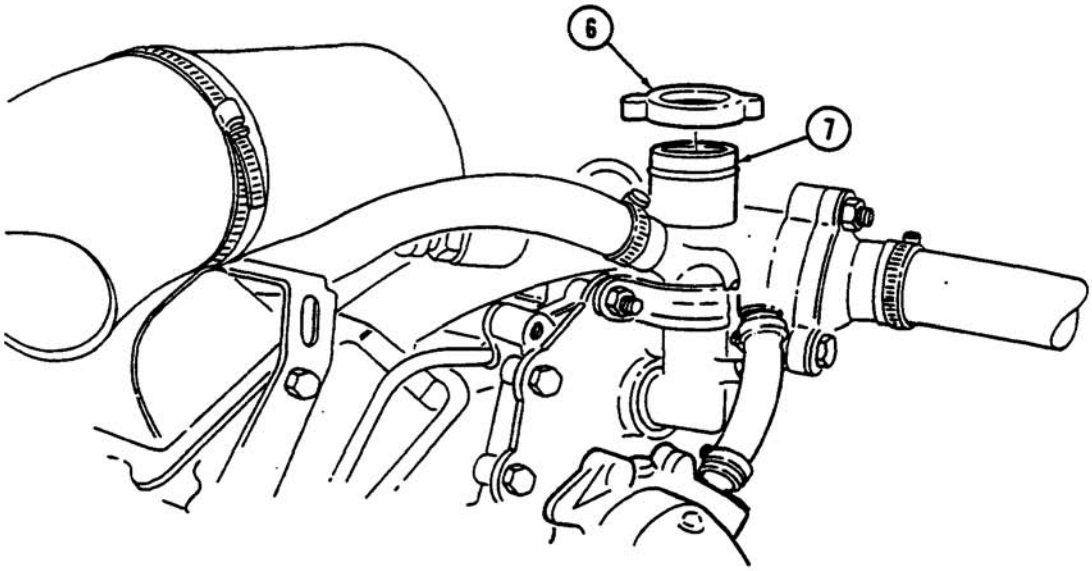

FOLLOW-ON TASKS: • Start engine (TM 9-2320-387-10) and check for leaks at oil filter and drainplug.
• Lower and secure hood (TM 9-2320-387-10).

3-6. OIL PAN REPLACEMENT

This task covers:

a. Removal **b . Installation**

INITIAL SETUP:

Tools

General mechanic's tool kit:
automotive (Appendix B, Item 1)
Maintenance and repair shop equipment:
automotive (Appendix B, Item 2)

Materials/Parts

Oil seal retainer (Appendix G, Item 253)
Two lockwashers (Appendix G, Item 151)
Silicone compound (Appendix C, Item 74)

Manual References

TM 9-2320-387-10
TM 9-2320-387-24P

Equipment Condition

- Starter removed (para. 4-11).
- Oil dipstick tube removed (para. 3-2).

General Safety Instructions

Do not drain oil when engine is hot.

Maintenance Level

Unit

a. Removal

WARNING

Do not drain oil when engine is hot. Severe injury to personnel may result.

NOTE

Have drainage container ready to catch oil.

1. Remove drainplug (7) and gasket (6) from oil pan (11) and drain oil. Install gasket (6) and drainplug (7) after oil is drained.
2. Remove two nuts (8), lockwashers (9), and starter cable support bracket (10) from studs (13). Discard lockwashers (9).
3. Remove twenty capscrews (5), two large capscrews (12), studs (13), and oil pan (11) from cylinder block (2). Remove any sealant from oil pan (11) and cylinder block (2).
4. Remove oil pan rear oil seal retainer (14) from rear main cap (1). Discard oil pan rear oil seal retainer (14).

b. Installation

1. Apply a bead of silicone compound to each end of oil pan rear oil seal retainer (14) and install oil seal retainer (14) on rear main cap (1).

NOTE

Immediately install oil pan after application of sealant.

2. Apply a 3/16-in. (5-mm) bead of silicone compound around two large holes (3) on cylinder block (2). Apply a 3/16-in. (5-mm) bead of sealant around oil pan sealing surface (4) following sealant diagram.
3. Install oil pan (11) on cylinder block (2) with twenty capscrews (5), two large capscrews (12), and studs (13). Tighten capscrews (5) and studs (13) to 4-10 lb-ft (5-14 N·m). Tighten large capscrews (12) to 13-20 lb-ft (18-27 N·m).
4. Install starter cable support bracket (10) on studs (13) with two lockwashers (9) and nuts (8).
5. Tighten oil drainplug (7) to 20 lb-ft (27 N·m).

3-6. OIL PAN REPLACEMENT (Cont'd)

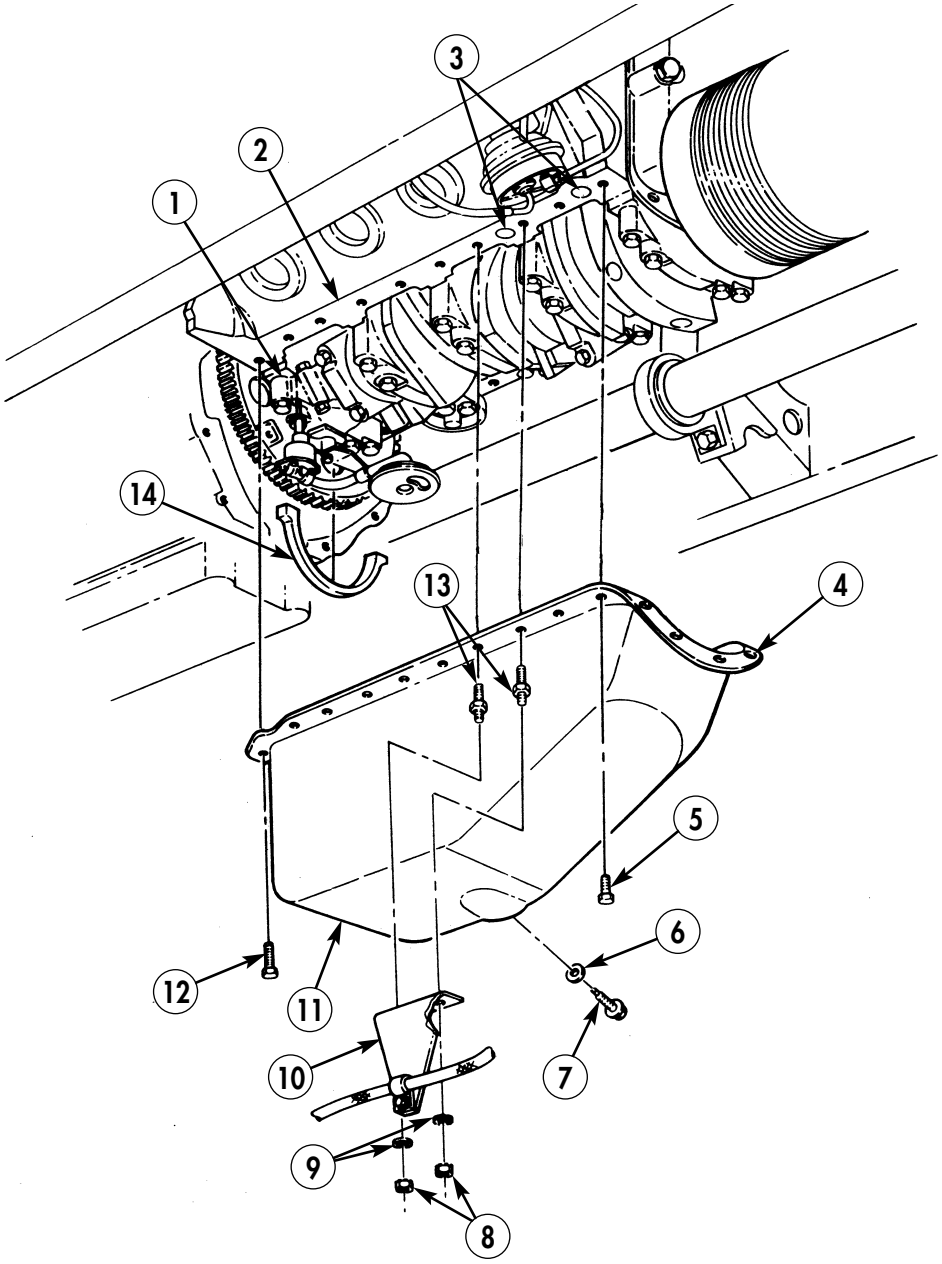

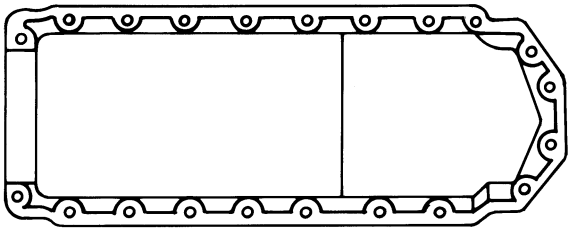

SEALANT DIAGRAM

FOLLOW-ON TASKS:
- Fill engine oil to proper level (TM 9-2320-387-10).
- Install oil dipstick tube (para. 3-2).
- Install starter (para. 4-11).

3-7. ENGINE OIL COOLER SUPPLY AND RETURN LINES MAINTENANCE

This task covers:

a. Supply Line Removal

b. Inspection

c. Supply Lime Installation

INITIAL SETUP:

Tools

General mechanic's tool kit: automotive (Appendix B, Item 1)
Maintenance and repair shop equipment: automotive (Appendix B, Item 2)

Materials/Parts

Tiedown strap (Appendix G, Item 326)
Lockwasher (Appendix G, Item 144)
Locknut (Appendix G, Item 77)

Manual References

TM 9-2320-387-10
TM 9-2320-387-24P

Equipment Condition

- Engine left splash shield removed (para. 10-23).
- Engine access cover removed (para. 10-22).

General Safety Instructions

Do not drain oil when engine is hot.

Maintenance Level

Unit

a. Supply Line Removal

WARNING

Do not drain oil when engine is hot. Severe injury to personnel may result.

CAUTION

Cover or plug all hoses and connections immediately after disconnection to prevent contamination. Remove all plugs prior to connection.

NOTE

- Engine oil cooler supply and return lines are replaced basically the same. This procedure covers supply line replacement.
- Have drainage container ready to catch oil.

1. Disconnect supply line connector (5) from adapter (4) and allow oil to drain.
2. Disconnect supply line connector (16) from oil cooler port (17).
3. Remove locknut (3), washer (2), capscrew (15), and washer (2) from supply line clamp (14), brake line clamp (1), and frame bracket (13). Discard locknut (3).
4. Remove capscrew (7), lockwasher (8), and clamp (9) from supply line (12) and engine mount bracket (10). Discard lockwasher (8).
5. Remove tiedown strap (11) and supply line (12) from return line (6). Discard tiedown strap (11).

b. Inspection

Inspect adapter (4) for damaged threads or cracks. Replace if defective.

c. Supply Line Installation

1. Position supply line (12) in approximate mounting location along frame.
2. Install supply line clamp (14) and brake line clamp (1) on frame bracket (13) with washer (2), capscrew (15), washer (2), and locknut (3). Tighten locknut (3) to 6 lb-ft (8 N•m).
3. Connect supply line connector (16) to oil cooler port (17).

3-7. ENGINE OIL COOLER SUPPLY AND RETURN LINES MAINTENANCE (Cont'd)

4. Connect supply line connector (5) to adapter (4).
5. Secure supply line (12) to engine mount bracket (10) with clamp (9), lockwasher (8), and capscrew (7).
6. Secure supply line (12) to return line (6) with tiedown strap (11).

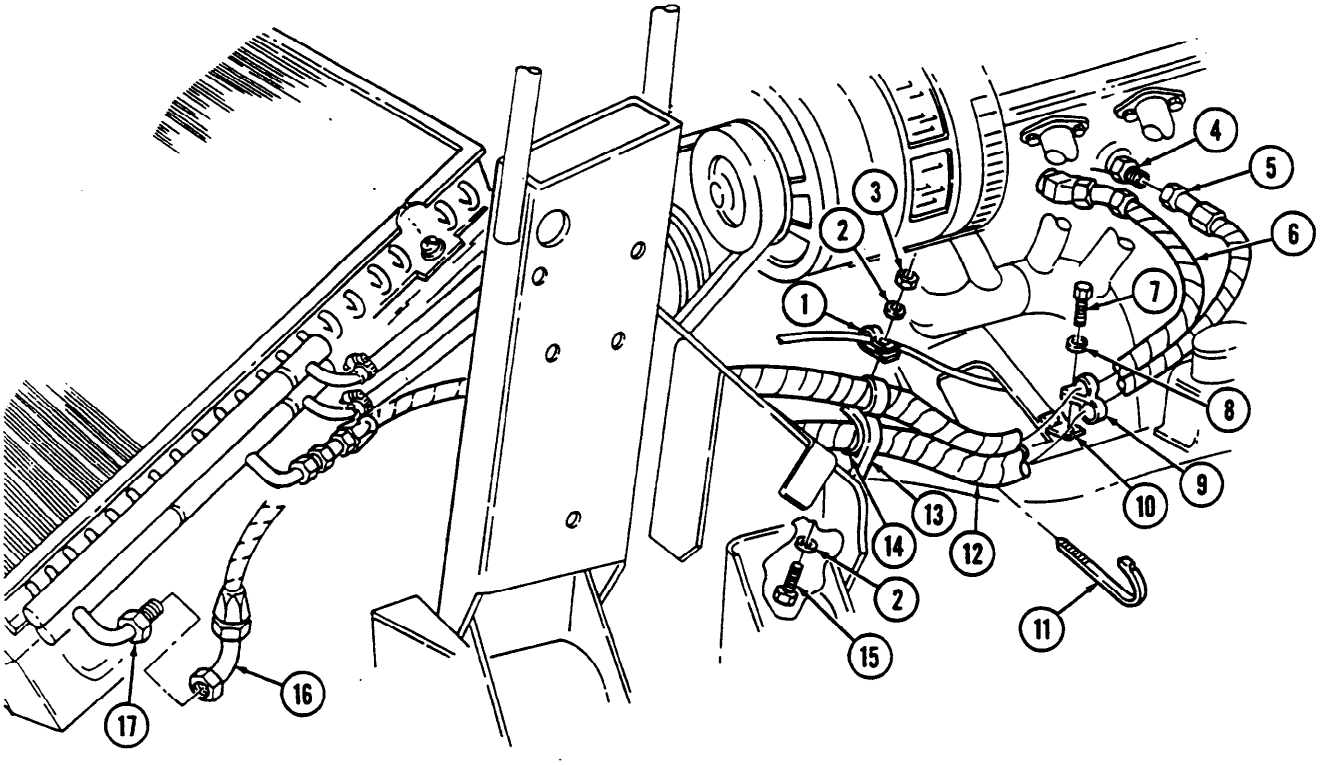

FOLLOW-ON TASKS:
- Install engine left splash shield (para. 10-23).
- Fill oil to proper level (TM 9-2320-387-10).
- Start engine (TM 9-2320-387-10) and inspect for leaks at engine oil cooler, supply and return lines.
- Install engine access cover (para. 10-22).

3-8. ENGINE, TRANSMISSION, AND POWER STEERING OIL COOLER ASSEMBLY MAINTENANCE

This task covers:

a. Removal
b. Installation
c. Cleaning and Inspection

INITIAL SETUP:

Tools

General mechanic's tool kit: automotive (Appendix B, Item 1)
Maintenance and repair shop equipment: automotive (Appendix B, Item 2)

Manual References

TM 9-2320-387-10
TM 9-2320-387-24P

Equipment Condition

- Engine left splash shield removed (para. 10-23).
- Headlight housing removed (para. 10-18).

General Safety Instructions

- Do not drain oil when engine is hot.
- Compressed air used for cleaning purposes will not exceed 30 psi (207 kPa).

Maintenance Level

Unit

a. Removal

WARNING

Do not drain oil when engine is hot. Severe injury to personnel may result.

CAUTION

- Cover or plug all hoses and connections immediately after disconnection to prevent contamination. Remove all covers or plugs prior to connection.
- Do not bend transmission oil cooler fins. Damaged fins reduce cooling efficiency, which may damage engine and/or transmission.

NOTE

- Have drainage container ready to catch oil.
- Tag all hoses for installation.

1. Disconnect two engine oil cooler supply and return lines (15) from engine oil cooler ports (11).
2. Loosen two hose clamps (2) and disconnect transmission fluid cooler line connector hoses (1) from transmission fluid cooler ports (3).
3. Loosen two hose clamps (13) and disconnect power steering fluid line hoses (12) from power steering fluid cooler ports (14).
4. Remove four socket-head screws (7) and oil cooler (16) from radiator (17).

NOTE

Perform steps 5 through 7 if vehicle is equipped with radiator cleaning components.

5. Remove two capscrews (4), washers (5), and support bracket (6) from oil cooler (16).
6. Remove capscrew (8), washer (9), clip (10), and spacer (10.1) from oil cooler (16).
7. Remove four capscrews (20), washers (19), and two hinges (18) from oil cooler (16).

3-8. ENGINE, TRANSMISSION, AND POWER STEERING OIL COOLER ASSEMBLY MAINTENANCE (Cont'd)

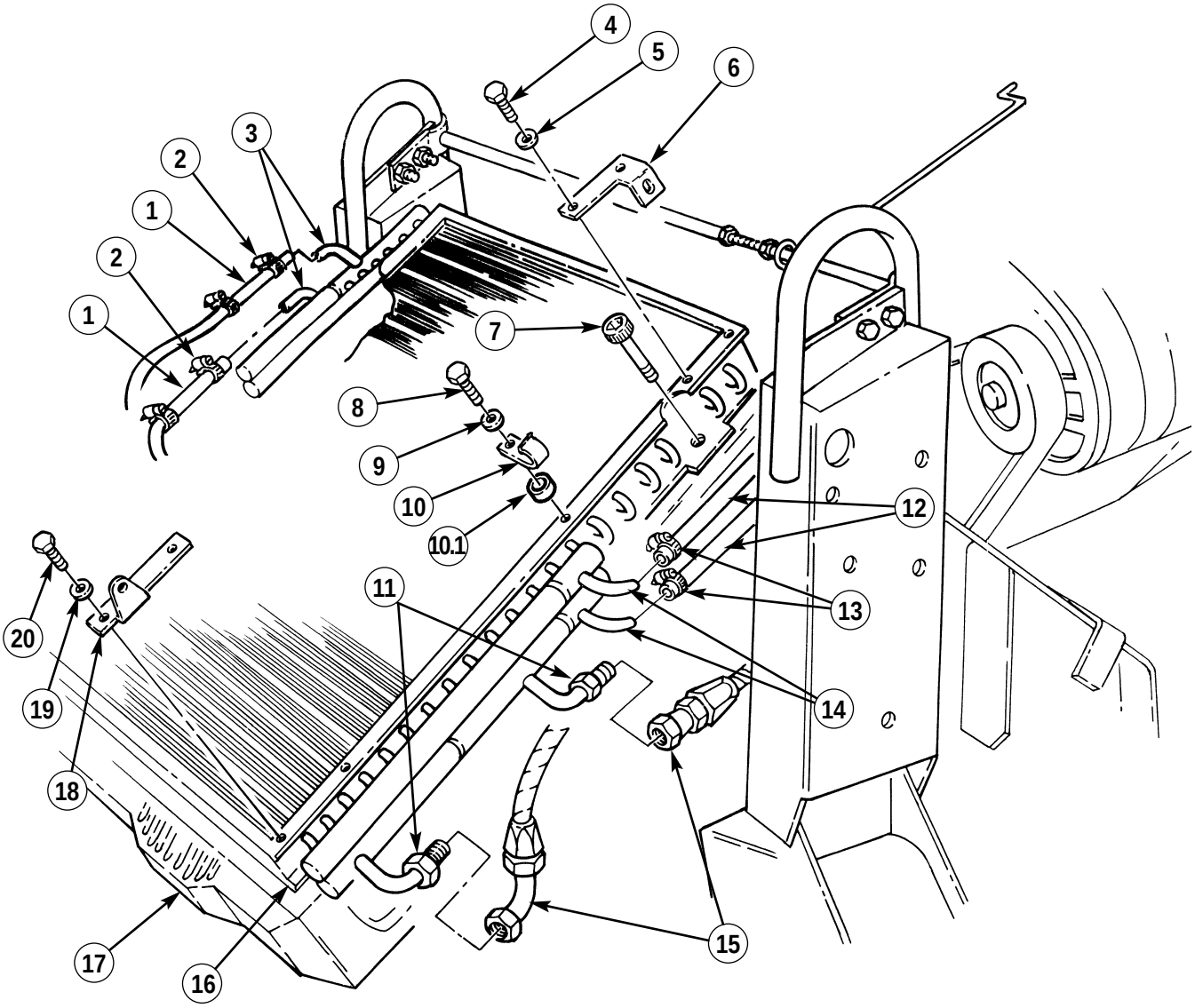

3-8. ENGINE, TRANSMISSION, AND POWER STEERING OIL COOLER ASSEMBLY MAINTENANCE (Cont'd)

b. Installation

NOTE

Perform steps 1 through 3 if vehicle is equipped with radiator cleaning components.

1. Install two hinges (18) on oil cooler (16) with four washers (19) and capscrews (20).
2. Install spacer (10.1) and clip (10) on oil cooler (16) with washer (9) and capscrew (8).
3. Install support bracket (6) on oil cooler (16) with two washers (5) and capscrews (4).
4. Install oil cooler (16) on radiator (17) with four socket-head screws (7).
5. Connect two transmission fluid cooler line connector hoses (1) to transmission fluid cooler ports (3) with hose clamps (2) and tighten hose clamps to 10-20 lb-in. (1-2 N·m).
6. Connect two engine oil cooler supply and return lines (15) to engine oil cooler ports (11).
7. Connect two power steering fluid line hoses (12) to power steering fluid cooler ports (14) and tighten hose clamps (13) to 10-20 lb-in. (1-2 N·m).

c. Cleaning and Inspection

1. Remove four socket-head screws (7) securing oil cooler (16) to radiator (17).
2. Remove prop rod (6.1) from clip (10), raise oil cooler (16) and secure oil cooler (16) in place using prop rod (6.1).

WARNING

Compressed air used for cleaning purposes will not exceed 30 psi (207 kPa). Use only with effective chip guarding and personal protective equipment (goggles/shield, gloves, etc.).

3. Using water and compressed air, remove dirt, trash, and insects embedded in oil cooler (16) and radiator (17) fins.
4. Inspect oil cooler (16) for breaks, punctures, cracks, and splits. Replace oil cooler (16), if damaged.
5. Lower oil cooler (16) and secure on radiator (17) with four socket-head screws (7).
6. Secure prop rod (6.1) in clip (10).

3-8. ENGINE, TRANSMISSION, AND POWER STEERING OIL COOLER ASSEMBLY MAINTENANCE (Cont'd)

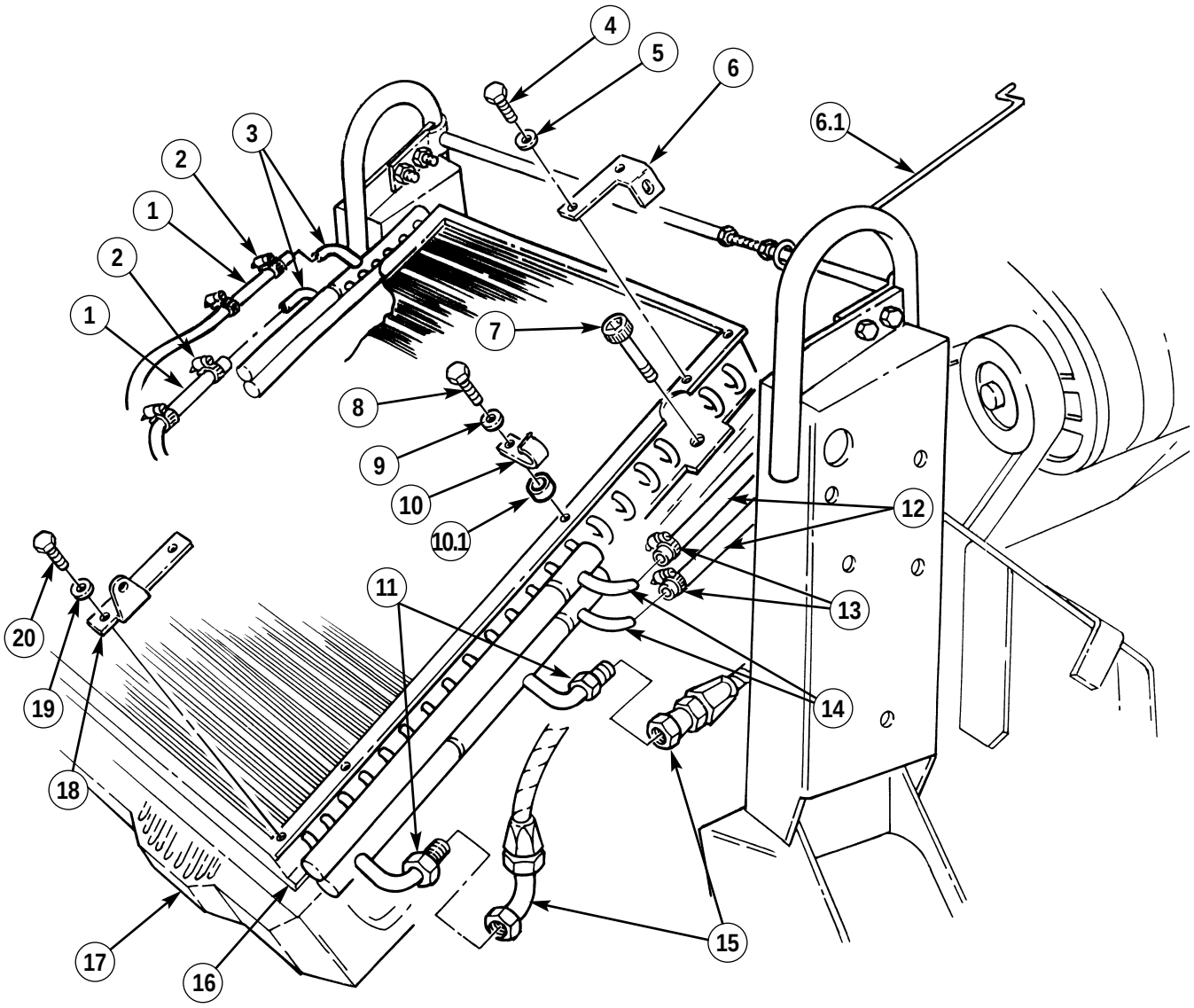

FOLLOW-ON TASKS:
- Fill power steering fluid to proper level (TM 9-2320-387-10).
- Fill transmission oil to proper level (TM 9-2320-387-10).
- Fill engine oil to proper level (TM 9-2320-387-10).
- Install headlight housing (para. 10-18).
- Install engine left splash shield (para. 10-23).
- Start engine (TM 9-2320-387-10) and check for leaks.

3-9. CRANKCASE DEPRESSION REGULATOR (CDR) VALVE AND BRACKET MAINTENANCE

This task covers:

a. Testing
b. Removal
c. Cleaning and Inspection
d. Installation

INITIAL SETUP:

Test Equipment
Manometer, U-tube
(Appendix B, Section IV, Item L)

Tools
General mechanic's tool kit:
automotive (Appendix B, Item 1)
Maintenance and repair shop equipment:
automotive (Appendix B, Item 2)

Manual References
TM 9-2320-387-10
TM 9-2320-387-24P

Equipment Condition
- Hood raised and secured (TM 9-2320-387-10).
- Engine access cover removed (para. 10-22).

Maintenance Level
Unit

a. Testing

1. Remove engine oil dipstick from oil dipstick tube (para. 3-2).
2. Install manometer in dipstick tube.
3. Connect STE/ICE-R unit to DCA connector.

NOTE

To read manometer pressure, add amount the water travels in column above zero to the amount the water travels in column below zero.

4. Start engine and let idle; record water pressure. Pressure should be zero inches of water, or a slight vacuum.
5. Increase engine speed to 2,000 rpm; record water pressure. Pressure should be 2-5 in.
6. If pressures are not within specifications in steps 4 and 5, replace CDR valve (7) and repeat test.
7. Install engine oil dipstick in oil dipstick tube (para. 3-2).

b. Removal

NOTE

CDR valves on vehicles equipped with deep water fording kit contain two additional vent lines.

1. Loosen clamp (5) and disconnect CDR valve oil fill tube hose (4) from CDR valve (7).
2. Remove two screws (1), washers (2), and CDR valve (7) from CDR valve bracket (3) and intake crossover hose (6).
3. Remove two nuts (9) from CDR valve bracket (3) and intake manifold studs (10).
4. Remove two nuts (8) and CDR valve bracket (3) from two valve cover studs (11).

3-9. CRANKCASE DEPRESSION REGULATOR (CDR) VALVE AND BRACKET MAINTENANCE (Cont'd)

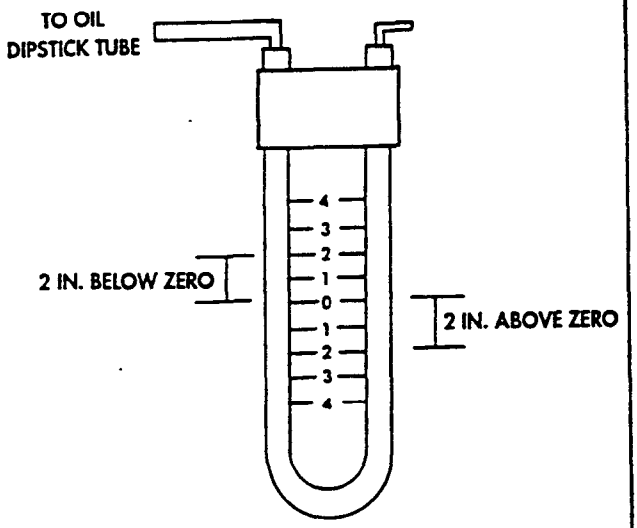

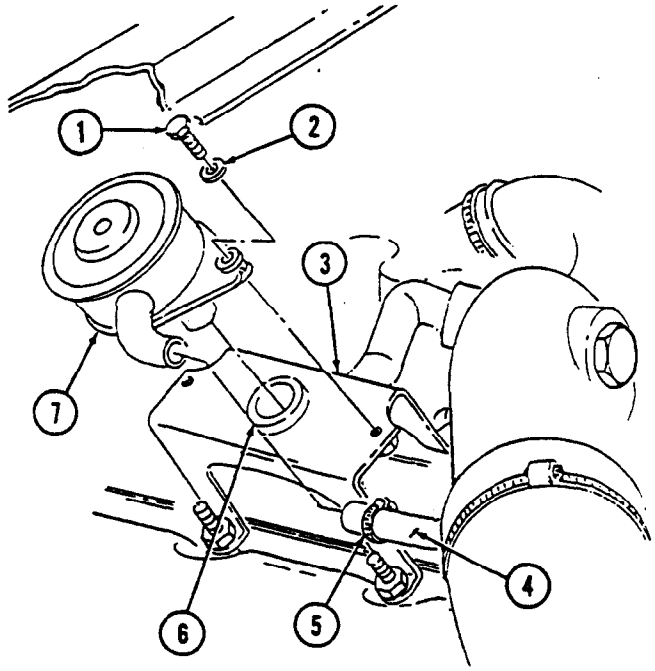

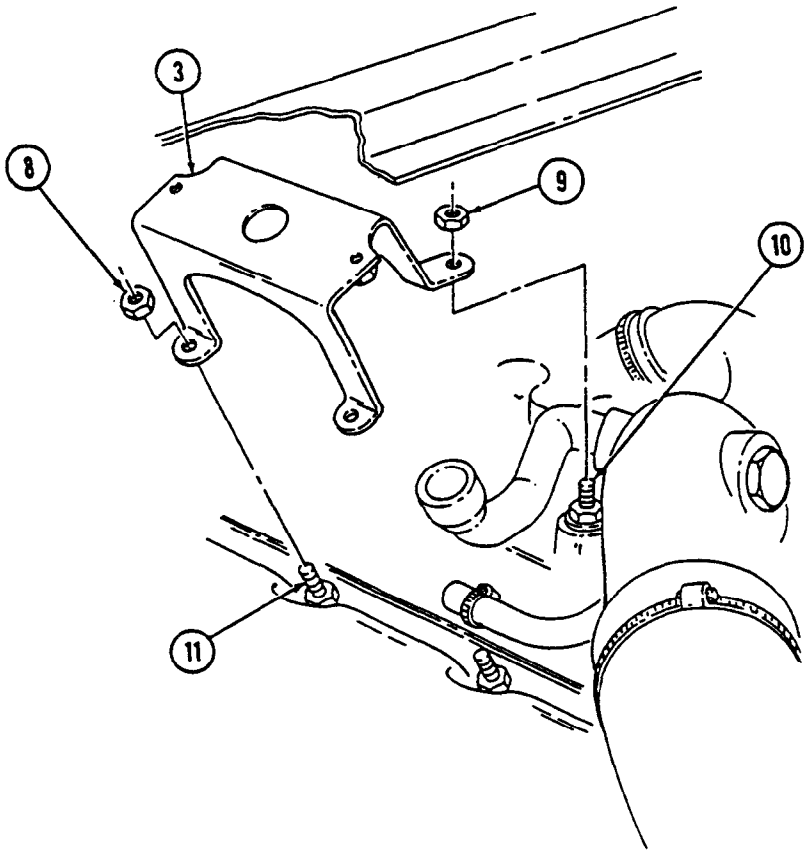

3-9. CRANKCASE DEPRESSION REGULATOR (CDR) VALVE AND BRACKET MAINTENANCE (Cont'd)

c. Cleaning and Inspection

CAUTION

Do not clean CDR valve with drycleaning solvent. Drycleaning solvent may damage the diaphragm inside CDR valve.

1. Clean oil and carbon deposits from CDR valve (12) with a clean, lint-free cloth.
2. Inspect CDR valve (12) and lines for leaks, cracks, and restrictions. Replace if damaged.

d. Installation

1. Install CDR valve bracket (2) on two intake manifold studs (4) and valve cover studs (6).
2. Secure CDR valve bracket (2) to intake manifold (5) with two nuts (3). Tighten nuts (3) to 15 lb-ft (20 N•m).
3. Secure CDR valve bracket (2) to valve cover studs (6) with two nuts (1). Tighten nuts (1) to 10 lb-ft (14 N•m).
4. Install CDR valve (12) on CDR valve bracket (2) and intake crossover hose (11) with two washers (8) and screws (7). Tighten screws (7) to 15 lb-ft (20 N•m).
5. Connect CDR valve oil fill tube hose (9) to CDR valve (12) and tighten clamp (10).

3-9. CRANKCASE DEPRESSION REGULATOR (CDR) VALVE AND BRACKET MAINTENANCE (Cont'd)

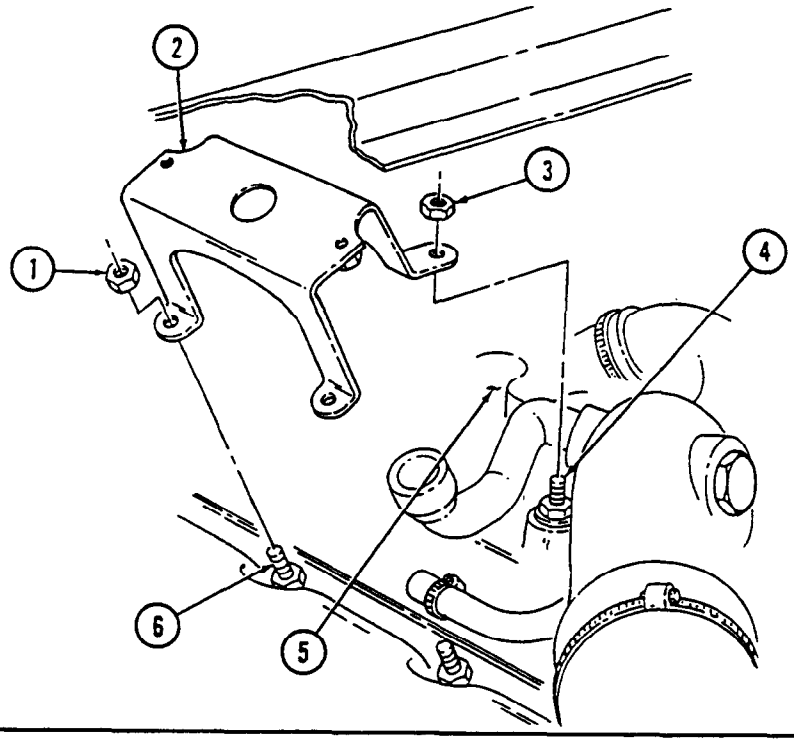

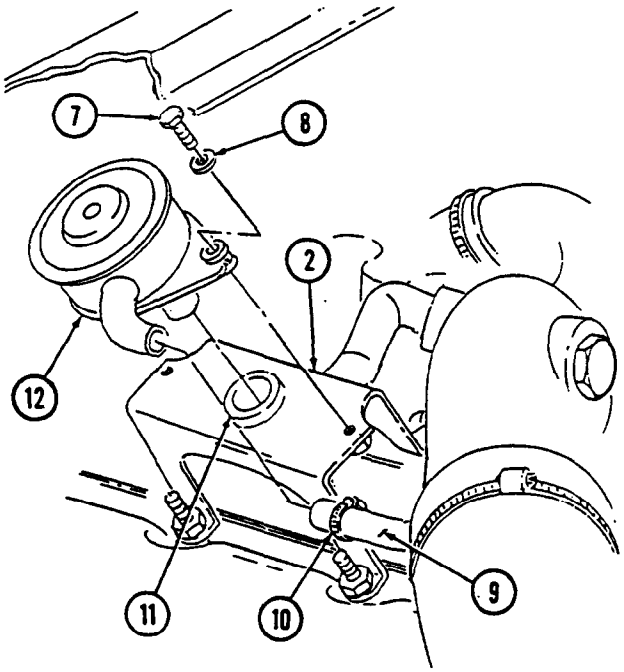

FOLLOW-ON TASKS:
- Lower and secure hood (TM 9-2320-387-10).
- Install engine access cover (para. 10-22).

3-10. CDR VALVE HOSES REPLACEMENT

This task covers:

a. Removal

b. Installation

INITIAL SETUP:

Tools
General mechanic's tool kit: automotive (Appendix B, Item 1)

Manual References
TM 9-2320-387-24P

Equipment Condition
CDR valve and bracket removed (para. 3-9).

Maintenance Level
Unit

a. Removal

1. Remove CDR valve intake crossover hose (3) from air horn (5).
2. Loosen clamp (2) and disconnect CDR valve oil fill tube hose (1) from oil fill tube (4).

b. Installation

1. Connect CDR valve oil fill tube hose (1) to oil fill tube (4) and tighten clamp (2).
2. Install CDR valve intake crossover hose (3) on air horn (5).

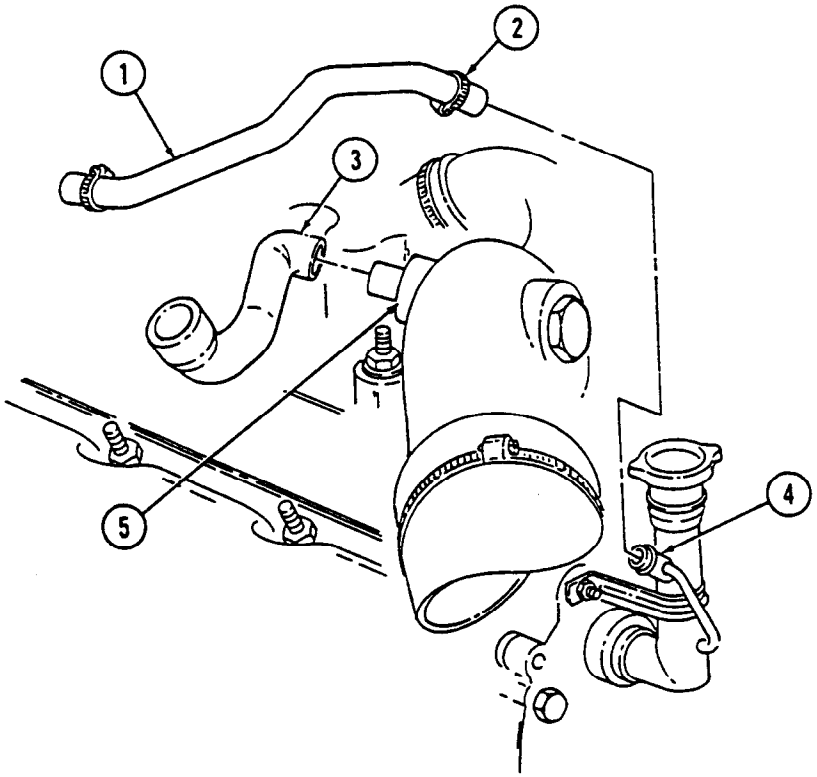

FOLLOW-ON TASK: Install CDR valve and bracket (para. 3-9).

Section II. FUEL SYSTEM MAINTENANCE

3-11. FUEL SYSTEM MAINTENANCE TASK SUMMARY

TASK PARA.	PROCEDURES	PAGE NO.
3-12.	Air Cleaner Assembly and Dust Unloader Maintenance	3-22
3-13.	Air Cleaner Filter Element Servicing	3-24
3-14.	Air Horn Replacement	3-28
3-15.	Air Horn-to-Air Cleaner Elbow Replacement	3-30
3-16.	Air Horn Support Bracket Replacement	3-31
3-17.	Air Restriction Gauge Replacement	3-32
3-18.	Weathercap Replacement	3-33
3-19.	Air Intake Assembly and Bracket Replacement	3-34
3-20.	Air Restriction Gauge Hose Replacement	3-36
3-21.	Air Intake and Fuel Pump Vent Lines Replacement	3-37
3-22.	Drainage Bracket Replacement	3-38
3-23.	Fuel Injection Pump Boot Replacement	3-39
3-24.	Fuel Pump Replacement	3-40
3-25.	Fuel Tank and Shield Maintenance	3-42
3-26.	Fuel Tank Supply and Return Lines Replacement	3-52
3-27.	Auxiliary Fuel Pickup and Return Lines Replacement	3-54
3-28.	Fuel Tank Vent Line and Filter Replacement	3-56
3-29.	Fuel Tank Filler Cap and Spout Maintenance	3-58
3-30.	Fuel Tank Filler Spout Vent Line Replacement	3-60
3-31.	Filler Spout Hose Replacement	3-62
3-32.	Fuel Tank Hangers Replacement	3-63
3-33.	Fuel Filter Maintenance	3-64
3-34.	Fuel Filter Element Maintenance	3-66
3-35.	Fuel Filter Drain Hose and Valve Replacement	3-68
3-36.	Fuel Injection Pump Return Hose Check Valve Maintenance	3-70
3-37.	Fuel Injection Return Hoses Replacement	3-72
3-38.	Fuel Drain-Back Tube Replacement	3-76
3-39.	Glow Plug Replacement	3-78
3-40.	Right Fuel Injection Lines Bracket Replacement	3-79
3-41.	Left Fuel Injection Lines Bracket Replacement	3-80

3-12. AIR CLEANER ASSEMBLY AND DUST UNLOADER MAINTENANCE

This task covers:

a. Removal
b. Inspection
c. Installation

INITIAL SETUP:

Tools

General mechanic's tool kit:
automotive (Appendix B, Item 1)
Maintenance and repair shop equipment:
automotive (Appendix B, Item 2)

Manual References

TM 9-2320-387-10
TM 9-2320-387-24P

Equipment Condition

Hood raised and secured (TM 9-2320-387-10).

General Safety Instructions

Ensure loosened clamp straps are secured.

Maintenance Level

Unit

a. Removal

NOTE

For dust unloader replacement, perform steps 1 and 2 only.

1. Remove four screws (16) and dust unloader cover (15) from two support brackets (4).
2. Loosen clamp (17) and remove dust unloader (18) from air cleaner assembly (9).
3. Loosen clamp (5) and disconnect elbow (6) from air cleaner assembly (9).
4. Disconnect air restriction gauge hose (7) from fitting (8).
5. Remove outer strap clamps (10) and (12) from air cleaner assembly (9).
6. Disconnect vent line (3) from elbow (2).
7. Remove air cleaner assembly (9) from two support brackets (4).
8. Remove elbow (2) from air cleaner assembly (9).
9. Remove adapter (14) and tube (13) from air cleaner assembly (9).
10. Remove fitting (8) from air cleaner assembly (9).
11. Remove strap clamp (11) from air cleaner assembly (9).

b. Inspection

1. Inspect gasket (1) for cracks or breaks. Replace gasket (1) if defective.
2. Inspect elbow (2), fitting (8), and adapter (14) for damaged threads or cracks. Replace if defective.

c. Installation

NOTE

For dust unloader replacement, perform steps 10 and 11 only.

1. Install strap clamp (11) on air cleaner assembly (9).
2. Install fitting (8) on air cleaner assembly (9).
3. Install tube (13) on adapter (14).
4. Install tube (13) and adapter (14) on air cleaner assembly (9).
5. Install elbow (2) on air cleaner assembly (9).

3-12. AIR CLEANER ASSEMBLY AND DUST UNLOADER MAINTENANCE (Cont'd)

WARNING

Tuck loosened clamp straps between dust unloader cover and air cleaner body. Failure to do this may result in injury to personnel.

6. Install air cleaner assembly (9) on two support brackets (4) with strap clamps (10), (11), and (12). Tighten clamps in the following sequence: (10), (11), and (12).
7. Connect elbow (6) to air cleaner assembly (9) and tighten clamp (5) to 50-60 lb-in (6-7 N•m).
8. Connect air restriction gauge hose (7) to fitting (8).
9. Connect vent line (3) to elbow (2).
10. Install dust unloader (18) on air cleaner assembly (9) and tighten clamp (17) to 45-50 lb-in. (5-6 N•m).
11. Install dust unloader cover (15) on two support brackets (4) with four screws (16).

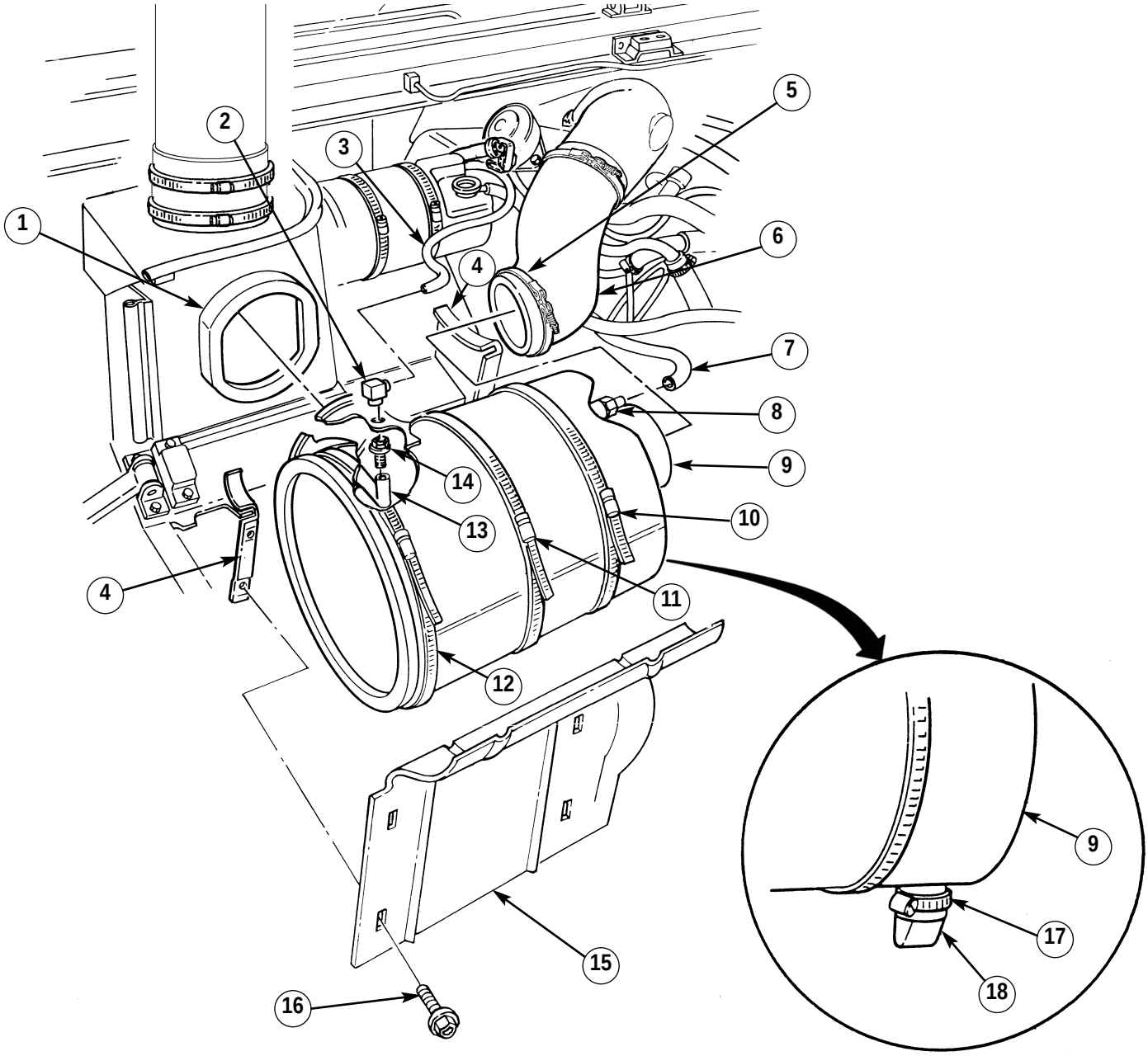

FOLLOW-ON TASK: Lower and secure hood (TM 9-2320-387-10).

3-13. AIR CLEANER FILTER ELEMENT SERVICING

This task covers:

a. Removal
b. Inspection
c. Emergency Cleaning
d. Cleaning
e. Installation

INITIAL SETUP:

Tools

General mechanic's tool kit: automotive (Appendix B, Item 1)
Maintenance and repair shop equipment: automotive (Appendix B, Item 2)

Materials/Parts

Detergent (Appendix C, Item 25)

Manual References

TM 9-2320-387-10
TM 9-2320-387-24P

Equipment Condition

Hood raised and secured (TM 9-2320-387-10).

General Safety Instructions

- Do not use unauthorized cleaning methods or liquids.
- Compressed air used for cleaning purposes will not exceed 30 psi (207 kPa).

Maintenance Level

Unit

WARNING

- Improper cleaning methods and use of unauthorized cleaning liquids can injure personnel and cause damage to equipment. Do not use anything other than compressed air, water, and detergent to clean elements.
- If NBC contamination is suspected, consult NBC officer or NBC NCO for appropriate handling instructions.

a. Removal

NOTE

The vehicle air cleaner may be configured with either a ring clamp or over-center clamp.

1. Loosen screw (8), or unlatch and remove clamp (1), cover (2), and gasket (3) from air cleaner assembly (6).

CAUTION

Cover housing opening with screen or rag to prevent contaminants from entering air intake system and damaging engine.

2. Remove nut and washer assembly (7) and filter element (4) from stud (5) of air cleaner assembly (6).

b. Inspection

1. Check gasket (3) for dents, tears, rips, and other damage. Ensure gasket has not taken a set. Ensure there are no hard dirt ridges on sealing surfaces.
2. Inspect filter element (4) for holes and tears by looking through element toward a bright light. If pinpoints of light shine through, replace element. Holes that are large enough to let light through are large enough to let contaminants through. Another way to check for leaks or damage is to look for uneven dirt patterns. Ensure there is no rust or flaking paint on metal parts of filter. If the filter has already been cleaned three times, or if damaged, replace filter element (4).
3. Check air cleaner assembly (6) for holes, dents, rust, or any other damage that will interfere with proper sealing and allow unfiltered air to enter and destroy engine.

c. Emergency Cleaning

CAUTION

Do not strike ends of filter element on hard surface, or damage to filter element may result.

Remove dust or sand from filter element (4) by holding it so neither end faces ground, and gently tap around filter element (4).

3-13. AIR CLEANER FILTER ELEMENT SERVICING (Cont'd)

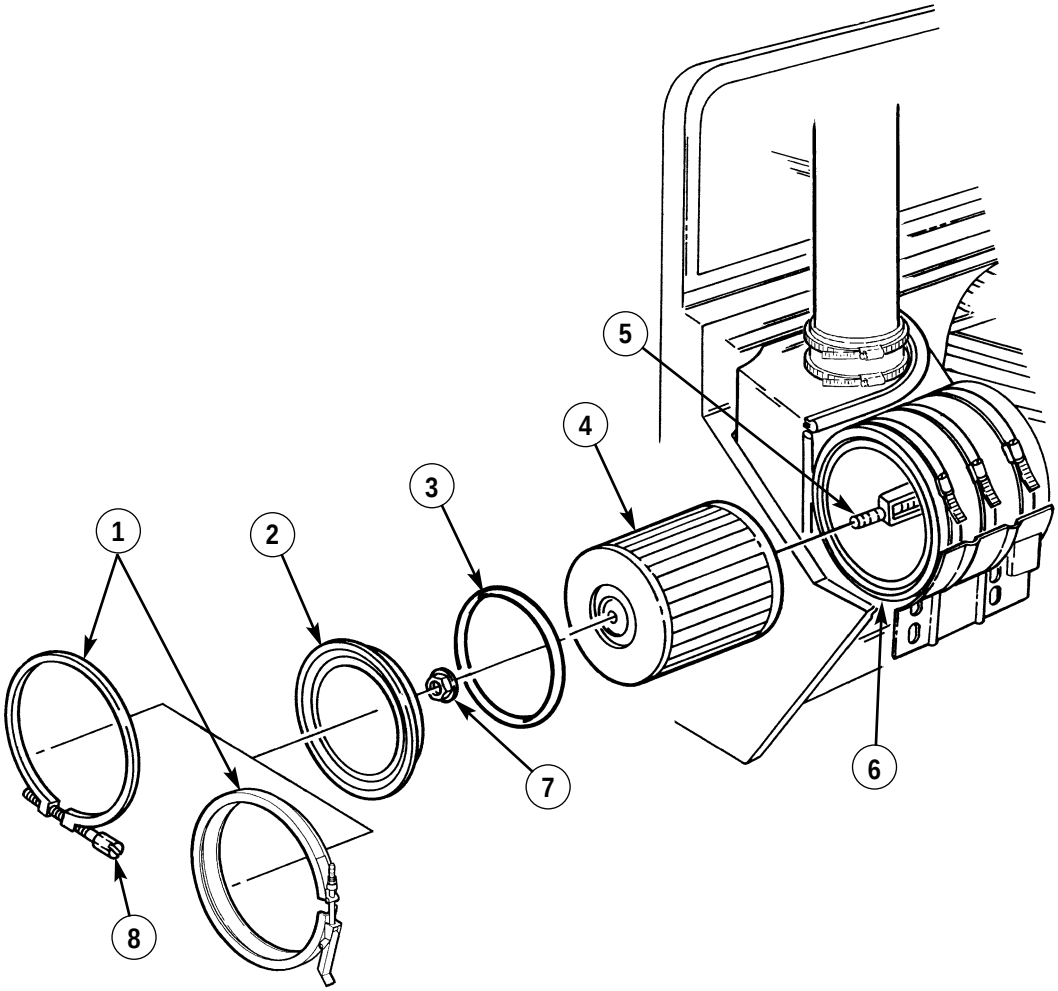

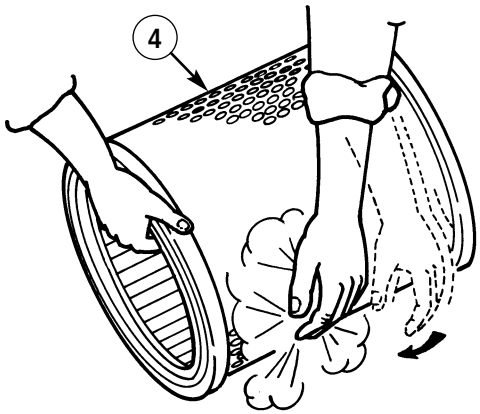

3-13. AIR CLEANER FILTER ELEMENT SERVICING (Cont'd)

d. Cleaning

WARNING

Compressed air used for cleaning purposes will not exceed 30 psi (207 kPa). Use only with effective chip guarding and personnel protective equipment (goggles/shield, gloves, etc.).

1. Hold nozzle at least 1 in. (25 mm) away from element (1) and direct compressed air against clean side of element (1) (in direction opposite to normal air flow). Move air stream up and down length of pleats until dust no longer blows out.
2. Prepare a solution of five gal. warm water 80-110°F (27-43°C) and one cup of non-sudsing detergent in a container large enough to submerge element (1).
3. Immerse element (1) completely in cleaning solution, swish for two minutes, soak element (1) for 15-20 min., then swish it around again to remove contaminants.
4. Remove element (1) from the solution and let drain.
5. Rinse element (1) with cool water 35-80°F (2-27°C) from clean side to dirty side (in direction opposite to normal air flow) with a gentle stream of water no more than 40 psi (276 kPa). If the clean side of element (1) was contaminated during soak cycle, rinse from both sides.

CAUTION

Do not use compressed air to speed drying time or damage to element may result.

6. Air-dry element (1) at normal room temperature until it is completely dry. Usually overnight is adequate, but temperature and humidity will affect drying time. If circulating air is used, do not exceed 180°F (82°C).
7. Inspect element (1) and discard if damaged. If not damaged, mark date of cleaning on element (1).

e. Installation

1. Remove screen or rag from housing opening.

CAUTION

When replacing filter element, ensure it is the 420 CFM element.

2. Install filter element (1) on stud (5) of air cleaner assembly (6) with nut and washer assembly (7). Tighten nut and washer assembly (7) to 20-40 lb-in (2-5 N·m).

CAUTION

When cover clamp is secured to end of filter body assembly, ensure clamp screw/latch is between three and six o'clock position to prevent damaging hood when hood is closed.

3. Install gasket (4) and cover (3) on air cleaner assembly (6) with clamp (2). Latch clamp (2) or tighten screw (8) to 35-40 lb-in (4-5 N·m).

3-13. AIR CLEANER FILTER ELEMENT SERVICING (Cont'd)

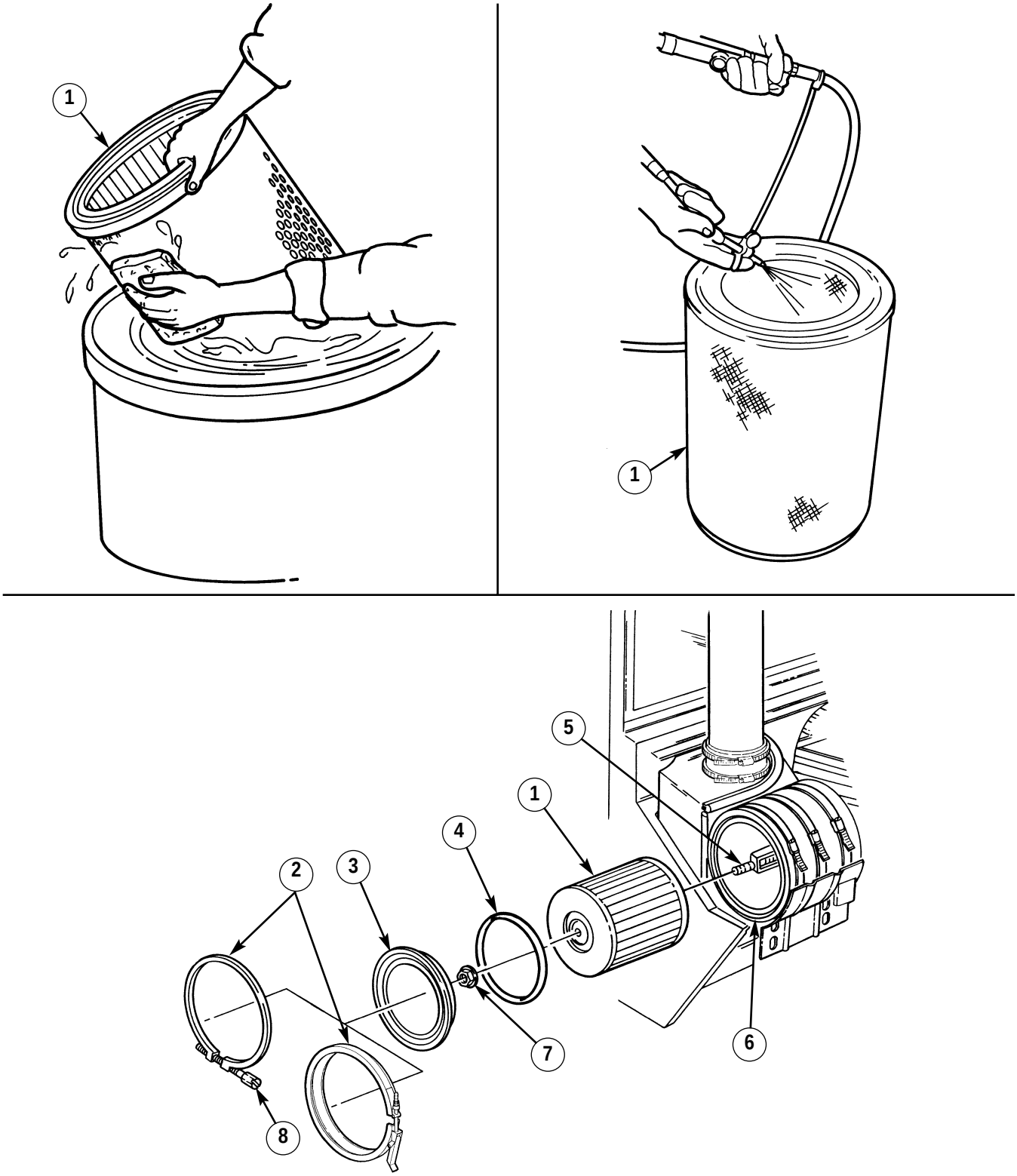

FOLLOW-ON TASKS:
- Lower and secure hood (TM 9-2320-387-10).
- Start engine (TM 9-2320-387-10) and ensure air restriction gauge on instrument panel does not show red.

3-14. AIR HORN REPLACEMENT

This task covers:

a. Removal **b. Installation**

INITIAL SETUP:

Tools
General mechanic's tool kit:
automotive (Appendix B, Item 1)
Maintenance and repair shop equipment:
(Appendix B, Item 2)

Materials/Parts
Adhesive (Appendix C, Item 10)

Manual References
TM 9-2320-387-10
TM 9-2320-387-24P

Equipment Condition
Hood raised and secured (TM 9-2320-387-10).

Maintenance Level
Unit

a. Removal

1. Disconnect CDR hose (1) from air horn (2).
2. Loosen clamp (4) and disconnect air intake elbow (3) from air horn (2).

CAUTION

Cover opening of turbocharger intake to prevent foreign material from entering turbocharger and damaging engine.

3. Loosen clamp (5) and remove air horn (2) from turbocharger intake hose (6).
4. Remove adapter (7) from air horn (2).
5. Remove inserts (8) and (9) from air horn (2).

b. Installation

1. Install inserts (8) and (9) on air horn (2).
1.1 Apply adhesive to adapter (7) and install adapter (7) on air horn (2).
2. Install air horn (2) on turbocharger intake hose (6) and tighten clamp (5) to 50-60 lb-in. (6-7 N·m).
3. Connect elbow (3) to air horn (2) and tighten clamp (4) to 50-60 lb-in. (6-7 N·m).
4. Connect CDR hose (1) to air horn (2).

3-14. AIR HORN REPLACEMENT (Cont'd)

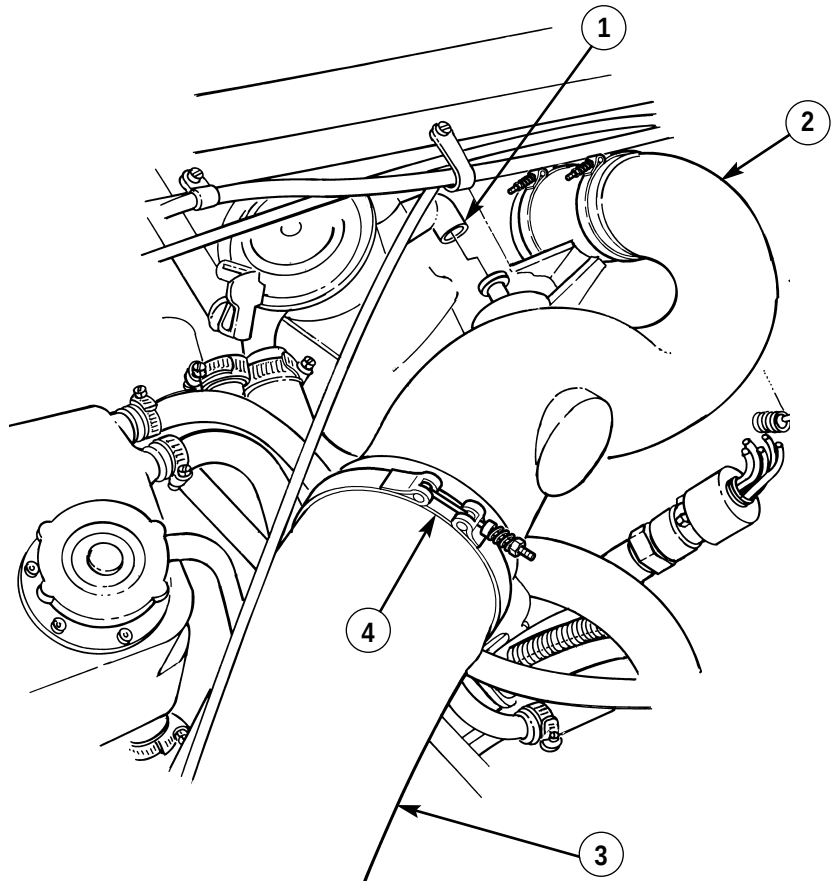

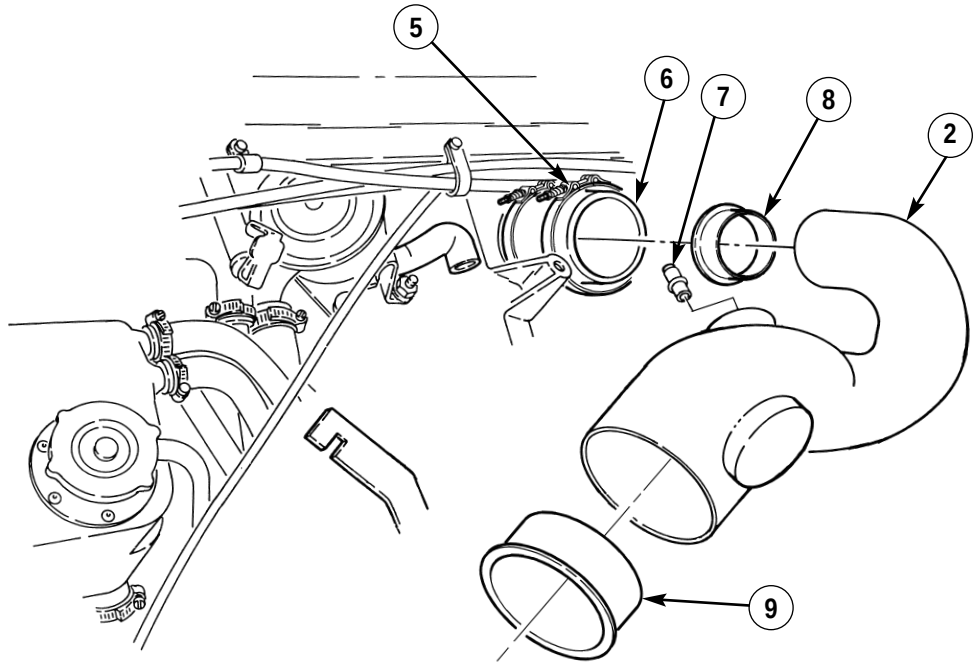

FOLLOW-ON TASK: Lower and secure hood (TM 9-2320-387-10).

3-15. AIR HORN-TO-AIR CLEANER ELBOW REPLACEMENT

This task covers:

a. Removal **b. Installation**

INITIAL SETUP:

Tools

General mechanic's tool kit: automotive (Appendix B, Item 1)
Maintenance and repair shop equipment: automotive (Appendix B, Item 2)

Manual References

TM 9-2320-387-10
TM 9-2320-387-24P

Equipment Condition

Hood raised and secured (TM 9-2320-387-10).

Maintenance Level

Unit

a. Removal

1. Loosen two clamps (3) and remove elbow (4) from air cleaner assembly (1) and air horn (2).
2. Remove two clamps (3) from elbow (4).

b. Installation

1. Install two clamps (3) on elbow (4).
2. Connect elbow (4) to air cleaner assembly (1) and air horn (2) and tighten two clamps (3) to 50-60 lb-in. (6-7 N·m).

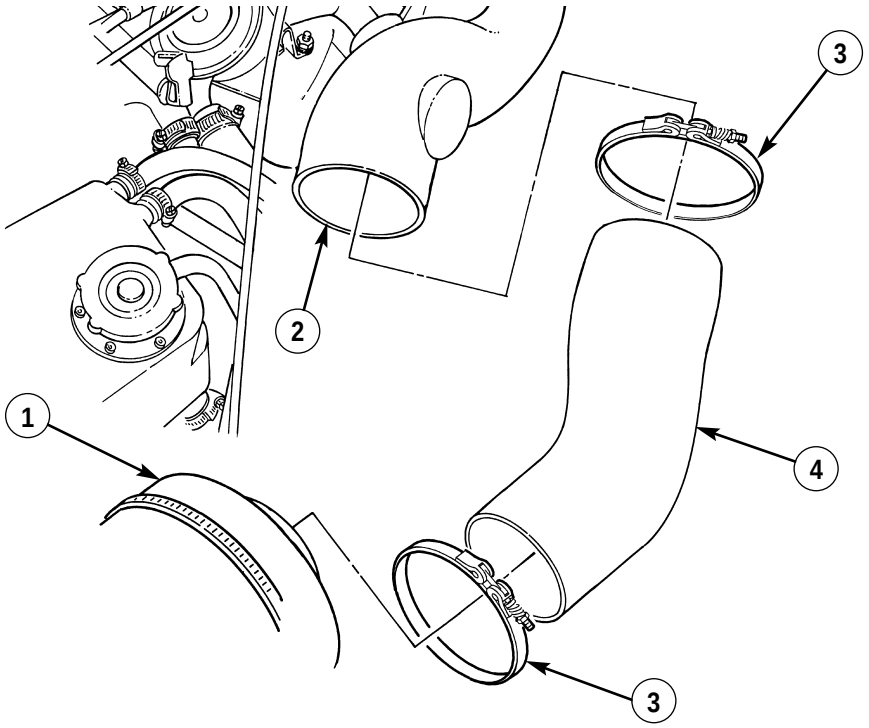

FOLLOW-ON TASK: Lower and secure hood (TM 9-2320-387-10).

3-16. AIR HORN SUPPORT BRACKET REPLACEMENT

This task covers:

a. Removal **b. Installation**

INITIAL SETUP:

Applicable Models
M1113

Tools
General mechanic's tool kit:
automotive (Appendix B, Item 1)
Maintenance and repair shop equipment:
automotive (Appendix B, Item 2)

Materials/Parts
Lockwasher (Appendix G, Item 185)

Manual References
TM 9-2320-387-24P

Equipment Condition
Air horn removed (para. 3-14).

Maintenance Level
Unit

a. Removal

1. Remove nut (5), lockwasher (4), two clamps (3), and stud (2) from air horn support bracket (1) and cylinder head (7). Discard lockwasher (4).
2. Remove capscrew (6) and support bracket (1) from cylinder head (7).

b. Installation

1. Install air horn support bracket (1) on cylinder head (7) with stud (2).
2. Secure air horn support bracket (1) to cylinder head (7) with capscrew (6). Tighten capscrew (6) and stud (2) to 40 lb-ft (54 N·m).
3. Install two clamps (3) on stud (2) with lockwasher (4) and nut (5).

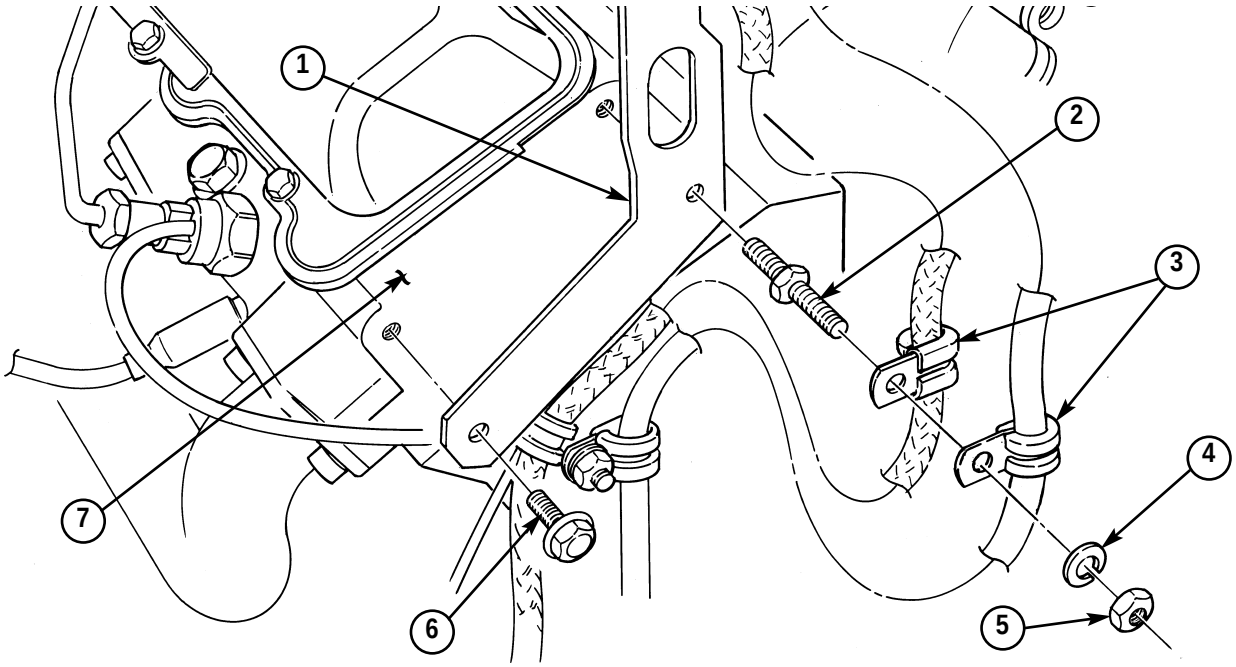

FOLLOW-ON TASK: Install air horn (para. 3-14).

3-17. AIR RESTRICTION GAUGE REPLACEMENT

This task covers:

a. Removal **b. Installation**

INITIAL SETUP:

Tools
General mechanic's tool kit:
automotive (Appendix B, Item 1)

Maintenance Level
Unit

Manual References
TM 9-2320-387-10
TM 9-2320-387-24P

a. Removal

1. Remove two screws (2) securing gauge (4) to bezel (1) and remove gauge (4) and gasket (3) from behind instrument panel (6).
2. Disconnect hose (5) and remove gauge (4).

b. Installation

1. Connect hose (5) to gauge (4).
2. Install gasket (3) and gauge (4) behind instrument panel (6) and secure to bezel (1) with two screws (2).

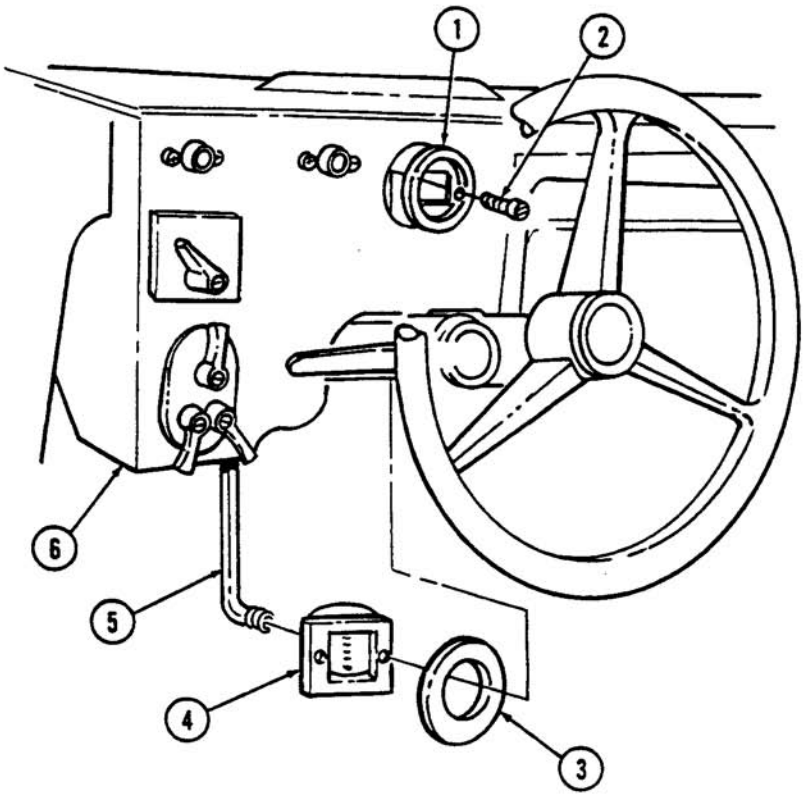

FOLLOW-ON TASK: Start engine (TM 9-2320-387-10) and check operation of air restriction gauge.

3-18. WEATHERCAP REPLACEMENT

This task covers:

a. Removal **b. Installation**

INITIAL SETUP:

Tools
General mechanic's tool kit:
automotive (Appendix B, Item 1)
Maintenance and repair shop equipment:
automotive (Appendix B, Item 2)

Maintenace Level
Unit

Manual References
TM 9-2320-387-24P

a. Removal

Remove clamp (2) and weathercap (1) from air intake duct (3).

b. Installation

Install weathercap (1) on air intake duct (3) with clamp (2). Tighten clamp (2) to 50-60 lb-in. (6-7 N·m).

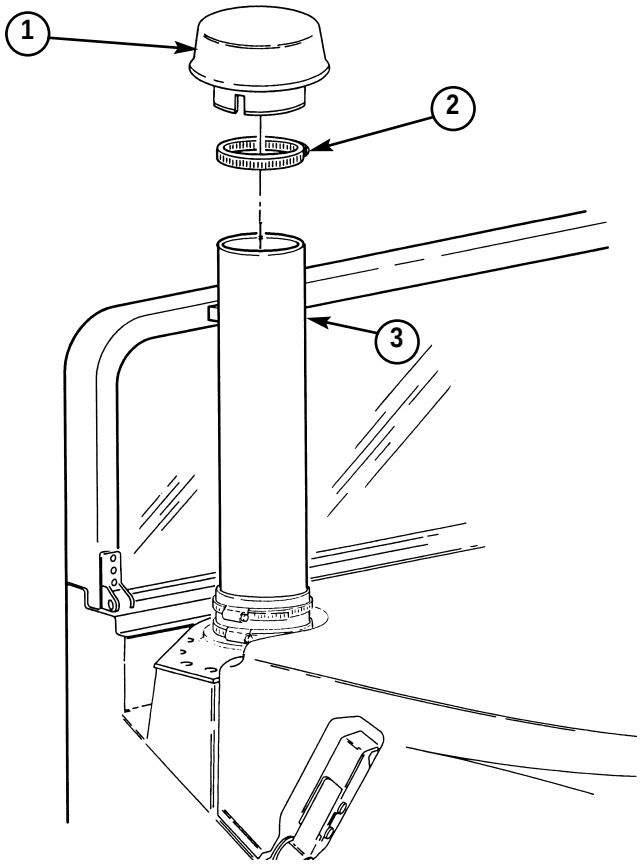

3-19. AIR INTAKE ASSEMBLY AND BRACKET REPLACEMENT

This task covers:

a. Removal **b. Installation**

INITIAL SETUP:

Tools
General mechanic's tool kit: automotive (Appendix B, Item 1)
Maintenance and repair shop equipment: automotive (Appendix B, Item 2)

Materials/Parts
Two locknuts (Appendix G, Item 106) (M1114 only)

Manual References
TM 9-2320-387-24P

Equipment Condition
Weathercap removed (para. 3-18).

a. Removal

1. Remove nut (5), washer (3), capscrew (2), and washer (3) from air intake assembly (1) and support bracket (4).
2. Loosen two clamps (6), and remove air intake assembly (1) and rubber boot (6.1) from air cleaner extension (7).

NOTE

Perform steps 3 and 4 for M1114 and step 5 for M1113.

3. Remove two locknuts (11), capscrews (8), washers (9), and support bracket (4) from mounting bracket (10). Discard locknuts (11).
4. Remove two capscrews (14), washers (13), and mounting bracket (10) from windshield (12).
5. Remove two capscrews (16), washers (15), and support bracket (4) from windshield (12).

b. Installation

NOTE

Perform step 1 for M1113 and steps 2 and 3 for M1114.

1. Install support bracket (4) on windshield (12) with two washers (15) and capscrews (16).
2. Install mounting bracket (10) on windshield (12) with two washers (13) and capscrews (14). Tighten capscrews (14) to 6 lb-ft (8 N·m).
3. Install support bracket (4) on mounting bracket (10) with two washers (9), capscrews (8), and locknuts (11).
4. Install rubber boot (6.1) and air intake assembly (1) on air cleaner extension (7) with two clamps (6). Tighten clamps (6) to 50-60 lb-in. (6-7 N·m).
5. Install air intake assembly (1) on support bracket (4) with washer (3), capscrew (2), washer (3), and nut (5). Tighten nut (5) to 43 lb-ft (58 N·m).

3-19. AIR INTAKE ASSEMBLY AND BRACKET REPLACEMENT (Cont'd)

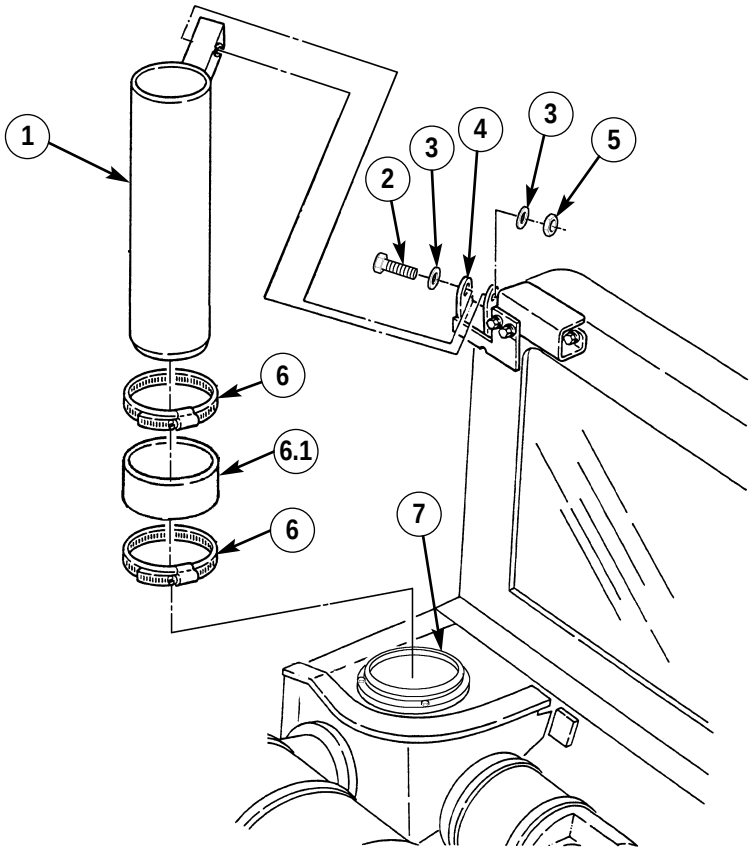

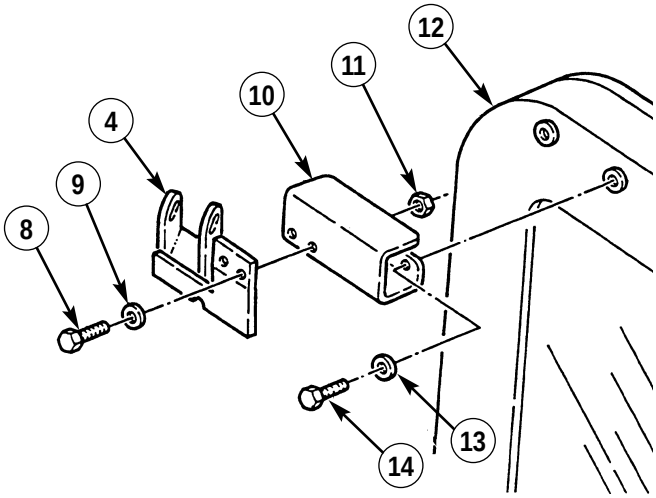

M1114

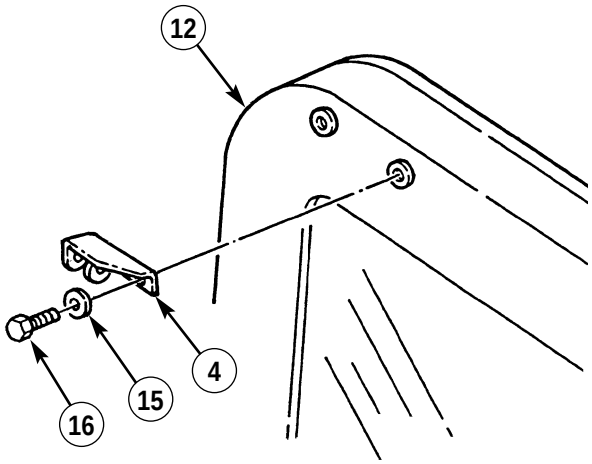

M1113

FOLLOW-ON TASK: Install weathercap (para. 3-18).

3-20. AIR RESTRICTION GAUGE HOSE REPLACEMENT

This task covers:

a. Removal **b. Installation**

INITIAL SETUP:

Tools
General mechanic's tool kit:
automotive (Appendix B, Item 1)

Manual References
TM 9-2320-387-10
TM 9-2320-387-24P

Equipment Condition
Hood raised and secured (TM 9-2320-387-10).

Maintenance Level
Unit

a. Removal

1. Loosen five clamps (2) securing hose (5) to A-beam (1).
2. Disconnect hose (5) from air cleaner assembly (8).
3. Disconnect hose (5) from gauge (3) located behind instrument panel (4).
4. Remove hose (5) from five clamps (2) and through grommet (6) in cowl (7).

b. Installation

1. Route hose (5) through grommet (6) and five clamps (2) in cowl (7) and connect hose (5) to air cleaner assembly (8).
2. Connect hose (5) to gauge (3).
3. Tighten five clamps (2) on hose (5) and A-beam (1).

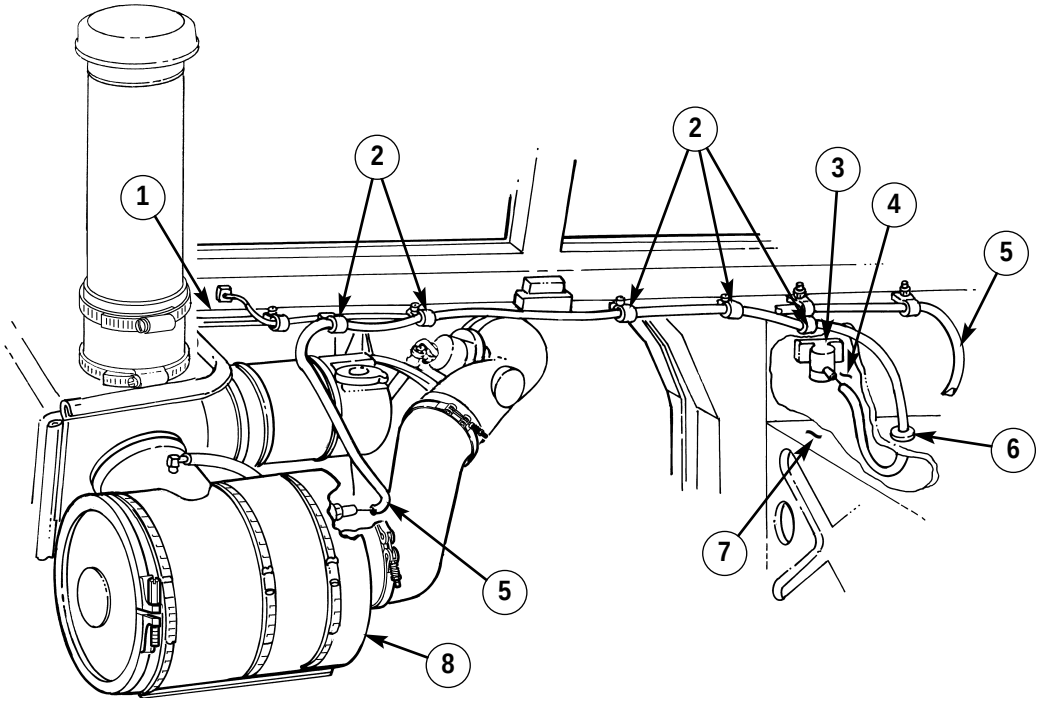

FOLLOW-ON TASK: Lower and secure hood (TM 9-2320-387-10).

3-21. AIR INTAKE AND FUEL PUMP VENT LINES REPLACEMENT

This task covers:

a. Removal **b. Installation**

INITIAL SETUP:

Tools
General mechanic's tool kit: automotive (Appendix B, Item 1)

Manual References
TM 9-2320-387-10
TM 9-2320-387-24P

Equipment Condition
Hood raised and secured (TM 9-2320-387-10).

Maintenance Level
Unit

a. Removal

NOTE

- For fuel pump vent line replacement, perform steps 2, 3, and 4 only.
- Insulation may need to be removed to access vent line.

1. Remove vent line (2) from air cleaner fitting (1) and tee fitting (8).
2. Loosen clamp (3) and disconnect vent line (4) from fuel pump (7).
3. Loosen clamp (5) and remove vent line (4) from tee fitting (6).
4. Remove two clamps (3) and (5) from vent line (4).

b. Installation

NOTE

For fuel pump vent line replacement, perform steps 2 and 3 only.

1. Connect vent line (2) to tee fitting (8) and air cleaner fitting (1).
2. Install clamps (3) and (5) on vent line (4).
3. Install vent line (4) on tee fitting (6) and fuel pump (7) and tighten clamps (3) and (5).
4. Install insulation if removed to access vent line (2).

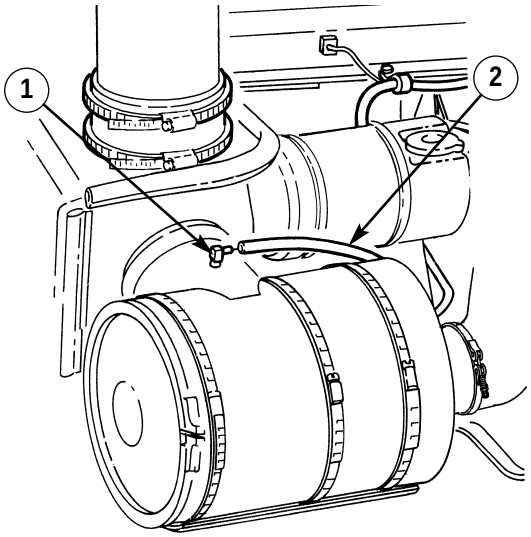

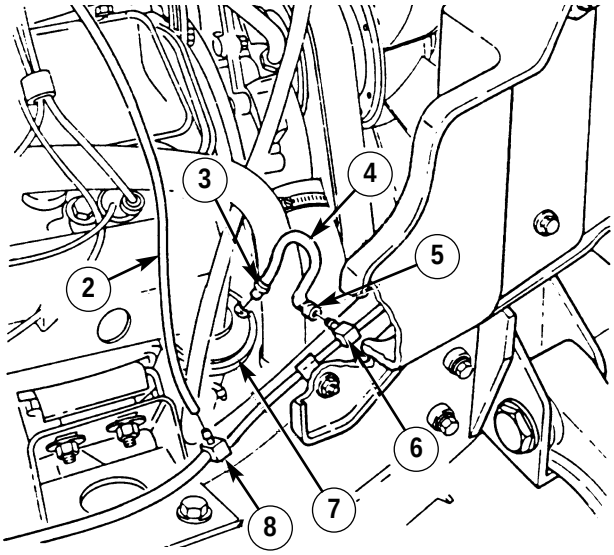

FOLLOW-ON TASK: Lower and secure hood (TM 9-2320-387-10).

3-22. DRAINAGE BRACKET REPLACEMENT

This task covers:

a. Removal **b. Installation**

INITIAL SETUP:

Tools
General mechanic's tool kit: automotive (Appendix B, Item 1)

Manual References
TM 9-2320-387-24P

Equipment Condition
Air cleaner assembly removed (para. 3-12).

Maintenance Level
Unit

a. Removal

Remove three screws (2) and drainage bracket (3) from body (1).

b. Installation

Install drainage bracket (3) on body (1) with three screws (2).

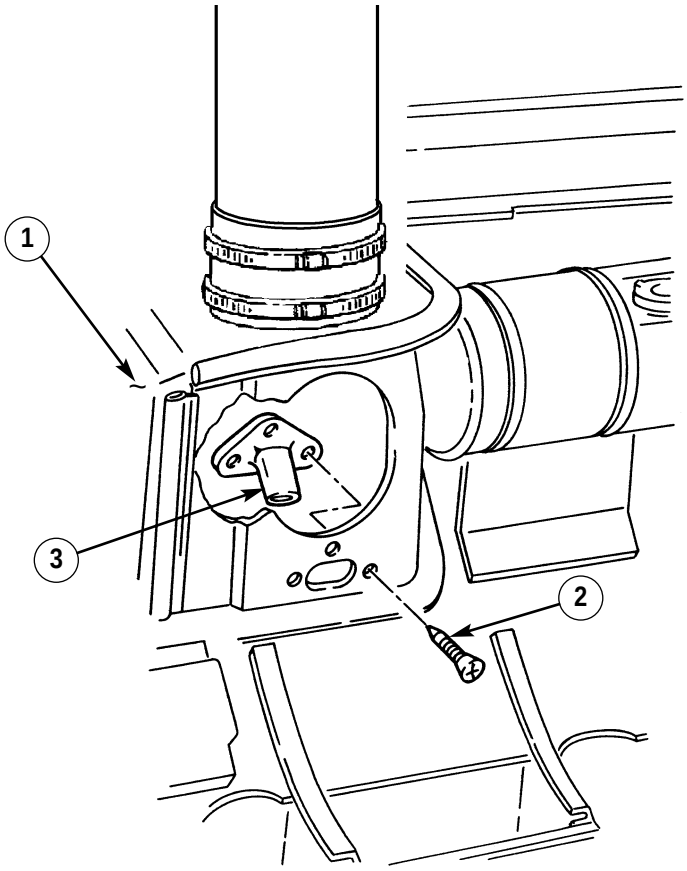

FOLLOW-ON TASK: Install air cleaner assembly (para. 3-12).

3-23. FUEL INJECTION PUMP BOOT REPLACEMENT

This task covers:

a. Removal **b. Installation**

INITIAL SETUP:

Tools
General mechanic's tool kit:
automotive (Appendix B, Item 1)

Manual References
TM 9-2320-387-10
TM 9-2320-387-24P

Equipment Condition
Hood raised and secured (TM 9-2320-387-10).

Maintenance Level
Unit

a. Removal

Remove clamp (3) and boot (2) from injection pump (1).

b. Installation

Install boot (2) on injection pump (1) with clamp (3).

Install boot (2) on injection pump (1) with clamp (3).

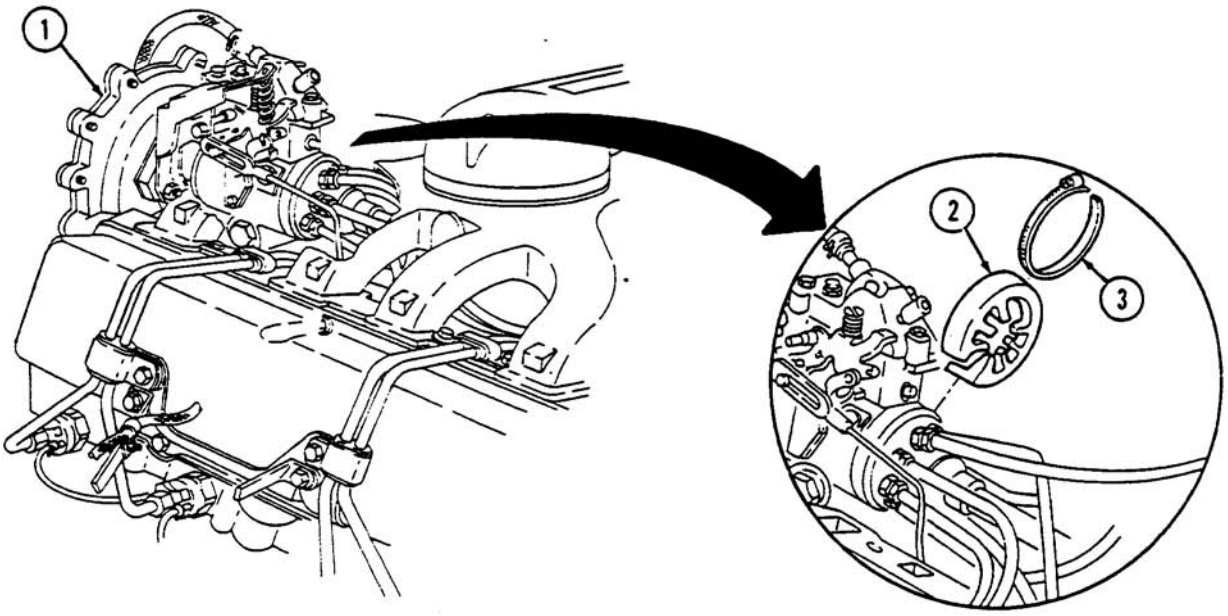

FOLLOW-ON TASK: Lower and secure hood (TM 9-2320-387-10).

3-24. FUEL PUMP REPLACEMENT

This task covers:

a. Removal **b. Installation**

INITIAL SETUP:

Tools

General mechanic's tool kit:
automotive (Appendix B, Item 1)
Maintenance and repair shop equipment:
(Appendix B, Item 2)

Materials/Parts

Mounting plate gasket (Appendix G, Item 193)
Fuel pump gasket (Appendix G, Item 35.1)
Grease (Appendix C, Item 34)

Manual References

TM 9-2320-387-10
TM 9-2320-387-24P

Equipment Condition

Battery ground cables disconnected (para. 4-68).

General Safety Instructions

Do not perform this procedure near fire, flames, or sparks.

Maintenance Level

Unit

WARNING

Diesel fuel is highly flammable. Do not perform this procedure near fire, flames, or sparks. Severe injury or death may result.

a. Removal

CAUTION

Cover or plug all open hoses and connections immediately after disconnection to prevent contamination. Remove all plugs prior to connection.

NOTE

Have drainage container ready to catch fuel.

1. Loosen clamp (14) and disconnect fuel inlet line (13) from fuel pump (2) and allow fuel to drain into container.
2. Disconnect fuel outlet line (12) from fuel pump (2) and allow fuel to drain into container.
3. Loosen clamp (3) and disconnect vent line (4) from fuel pump (2).
4. Remove two capscrews (1), fuel pump (2), and gasket (6) from fuel pump mounting plate (7). Discard gasket (6).
5. Remove two capscrews (11), fuel pump mounting plate (7), and gasket (8) from cylinder block (10). Discard gasket (8).
6. Remove pushrod (9) from cylinder block (10).

b. Installation

NOTE

GAA grease is used on pushrod to retain it in cylinder block during installation.

1. Apply grease on pushrod (9) and insert pushrod (9) into cylinder block (10). Turn over engine by hand until pushrod (9) fully retracts.
2. Install gasket (8) and mounting plate (7) on block (10) with two capscrews (11) for alignment of pump (2) to cylinder block (10).

3-24. FUEL PUMP REPLACEMENT (Cont'd)

3. Secure gasket (8) and mounting plate (7) to cylinder block (10) with two capscrews (11). Tighten capscrews (11) to 4-7 lb-ft (5-10 N·m).

3.1. Connect fuel outlet line (12) to fuel pump (2). Do not tighten fuel outlet line (12) at this time.

4. Install gasket (6) and fuel pump (2) on fuel pump mounting plate (7) and block (10) with two capscrews (1), ensuring lever (5) aligns with pushrod (9). Tighten capscrews (1) to 20-30 lb-ft (27-41 N·m).

5. Connect vent line (4) to fuel pump (2) and tighten clamp (3) to 10-20 lb-in. (1-2 N·m).

6. Tighten fuel outlet line (12) on fuel pump (2).

7. Connect fuel inlet line (13) to fuel pump (2) and tighten clamp (14).

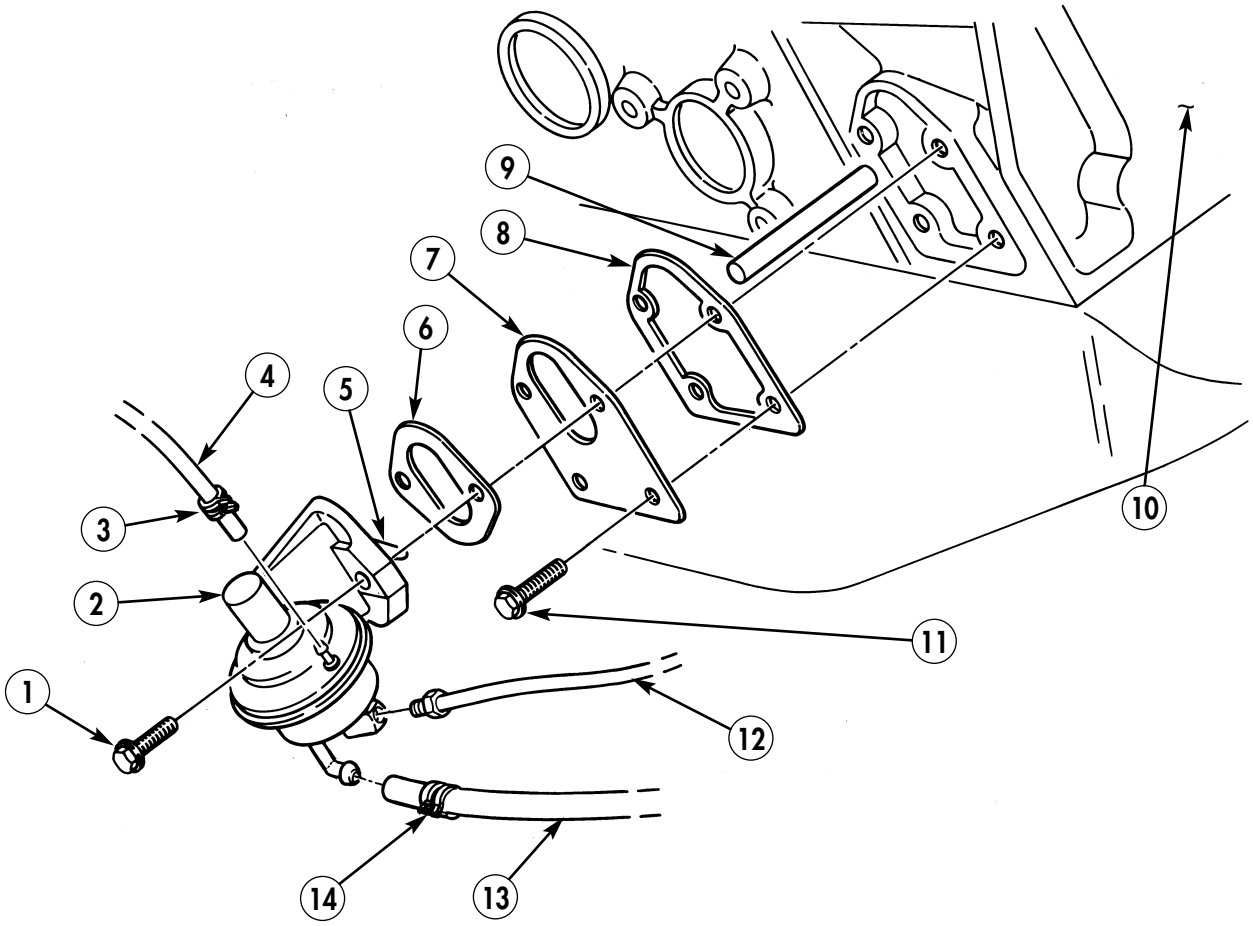

FOLLOW-ON TASKS:
- Connect battery ground cables (para. 4-68).
- Start engine (TM 9-2320-387-10) and check fuel pump and hoses for fuel leaks.

3-25. FUEL TANK AND SHIELD MAINTENANCE

This task covers:

a. Draining
b. Removal
c. Disassembly
d. Cleaning and Inspection
e. Assembly
f. Installation

INITIAL SETUP:

Tools

General mechanic's tool kit:
automotive (Appendix B, Item 1)
Maintenance and repair shop equipment:
(Appendix B, Item 2)

Materials/Parts

Gasket (Appendix G, Item 37)
Fourteen locknuts (Appendix G, Item 77)
Three lockwashers (Appendix G, Item 144)
Drycleaning solvent (Appendix C, Item 26)
Adhesive (Appendix C, Item 2)
Sealing compound (Appendix C, Item 62)
Tiedown strap (Appendix G, Item 322)

Personnel Required

One mechanic
One assistant

Manual References

TM 9-2320-387-10
TM 9-2320-387-24P

Equipment Condition

- Battery ground cables disconnected (para. 4-68).
- Rear propeller shaft removed (para. 6-4).
- Right rear underbody armor removed (M1114 only) (para. 11-39).

General Safety Instructions

- Do not perform this procedure near fire, flames, or sparks.
- Drycleaning solvent is flammable and will not be used near an open flame.

Maintenance Level

Unit

WARNING

Diesel fuel is highly flammable. Do not perform this procedure near fire, flames, or sparks. Severe injury or death may result.

a. Draining

NOTE

Have drainage container ready to catch fuel.

1. Remove fuel tank filler cap (1).
2. Remove drainplug (3) from fuel tank (2) and allow fuel to completely drain into container.

CAUTION

Do not overtighten drainplug. Drainplug must not turn in hole. Sharp edge of hole may cut rubber.

3. Install drainplug (3) flush with bottom of fuel tank (2).

b. Removal

NOTE

Perform steps 1 through 1.2 if equipped with new vent line assembly.

1. Remove tiedown strap (13.1) from vent lines (14.1) and (4). Discard tiedown strap (13.1).
1.1. Remove vent line (14.1) from elbow (4.1).
1.2. Remove vent line (4) from elbow (4.2).
1.3. Remove vent line (4) from filler spout (5).
2. Remove locknut (15), washer (12), capscrew (11), washer (12), and clamp (13) from vent line (4) and body (14). Discard locknut (15).

3-25. FUEL TANK AND SHIELD MAINTENANCE (Cont'd)

3. Remove locknut (16), washer (7), capscrew (8), washer (7), and clamp (6) from filler spout (5). Discard locknut (16).
4. Loosen clamp (9) and remove hose (10) from spout (5).

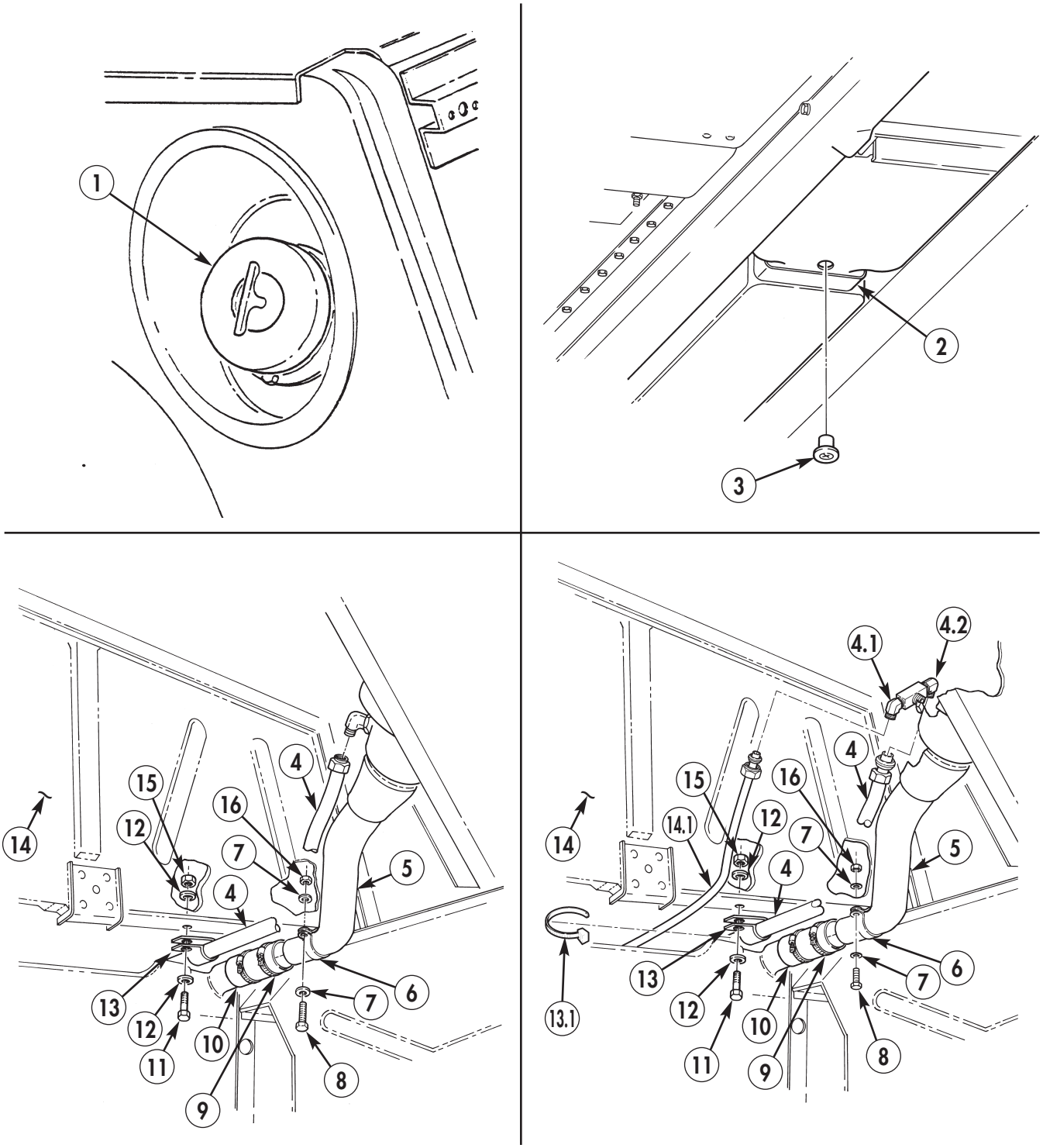

3-25. FUEL TANK AND SHIELD MAINTENANCE (Cont'd)

5. Remove two nuts (15), washers (14), and capscrews (7) from fuel tank support straps (6) and (12) and remove lower straps (13).
6. Loosen two clamps (3) and disconnect fuel supply hoses (1) and (2) from fuel return line (4) and supply line (5).

NOTE

Perform step 7 if vehicle is equipped with vehicular heater.

7. Loosen clamp (17) and disconnect fuel supply hose (18) from vehicular heater fuel supply line (16).
8. Disconnect vent line (20) from tee (19).
9. Remove capscrew (22) and clamp (23) securing vent line (20) to body (24).
10. Remove nut (8), washer (9), capscrew (10), and rear strap (12) from strap bracket (11).
11. Lower fuel tank (21) for access to vent line (29) and clamp (28).
12. Disconnect vent line (20) from fitting (25) on fuel tank (21).
13. Remove locknut (26), washer (27), and clamp (28) from vent line (29) and fuel tank (21). Discard locknut (26).
14. Remove vent line (29) from vent line housing (30).

NOTE

Prior to removal, tag leads for installation.

15. Disconnect jumper leads 58J (33) and 28B (35) from body wiring harness (34).
16. Bend clamp (32) down and remove jumper harness (31).
17. Remove fuel tank (21) from vehicle.

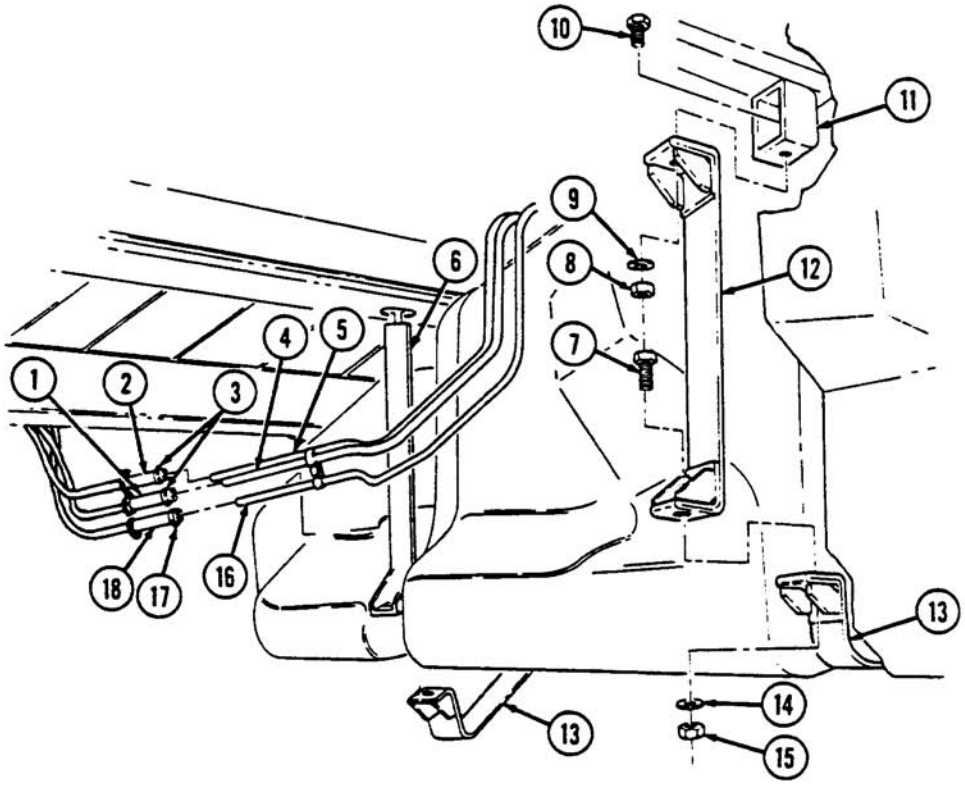

3-25. FUEL TANK AND SHIELD MAINTENANCE (Cont'd)

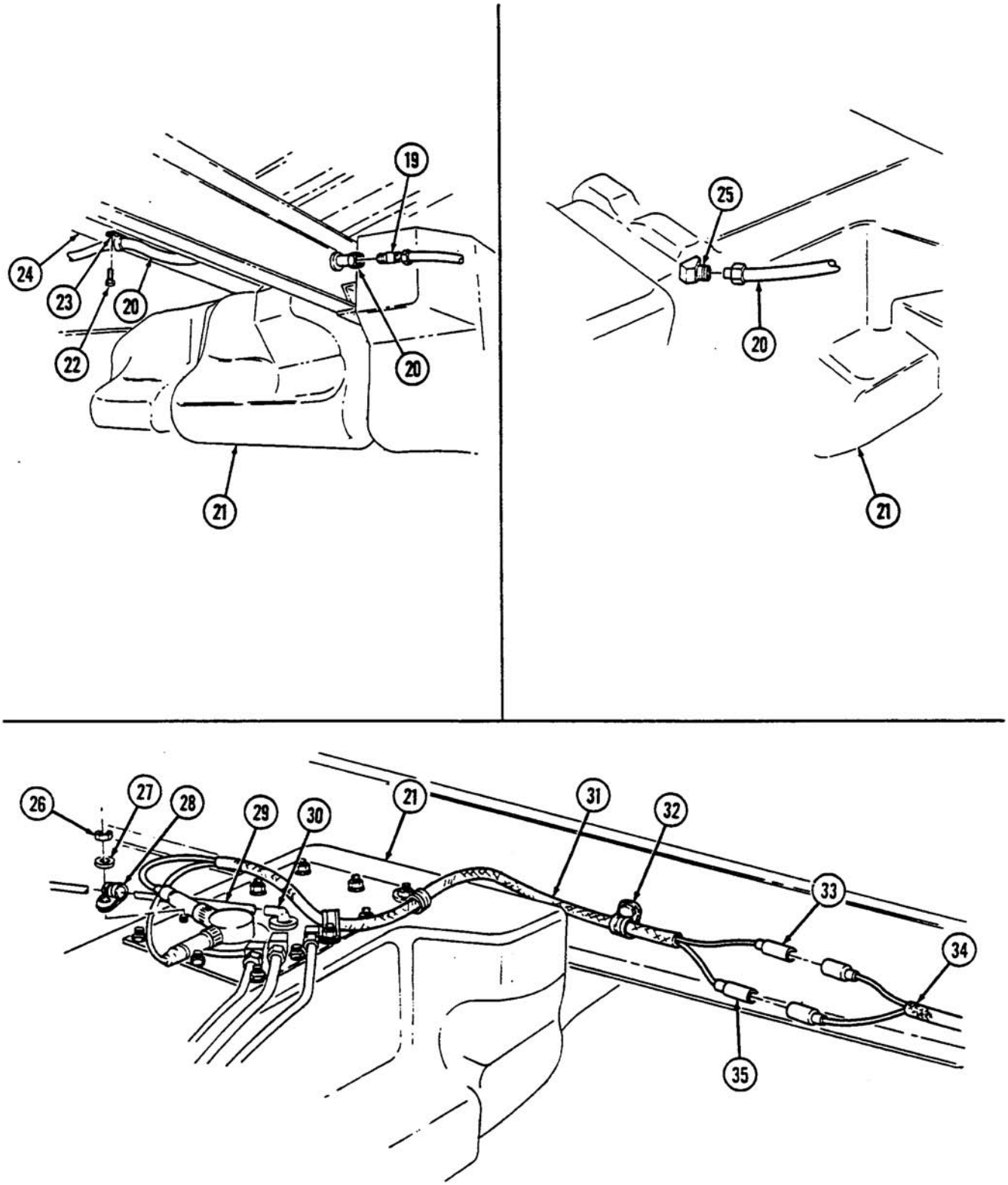

3-25. FUEL TANK AND SHIELD MAINTENANCE (Cont'd)

c. Disassembly

1. Thoroughly clean outside of tank (18) to prevent dirt contamination.
2. Disconnect fuel supply line (31) from fuel supply tube (12) and fuel return line (30) from fuel return tube (34).

NOTE

Perform step 3 if vehicle is equipped with vehicular heater and auxiliary fuel line.

3. Disconnect auxiliary fuel supply and return lines (25) from fuel supply tubes (13).
4. Remove capscrew (27), clamp (29), fuel supply line (31), fuel return line (30), and shield (26) from fuel tank (18).

4.1 Remove auxiliary fuel supply and return lines (25) and clamp (28), if installed. Remove crossover hose (27.2) and two clamps (27.1), if installed.

5. Remove two locknuts (7), washers (8), clamps (6), and jumper harness (5) from access cover (11). Discard locknuts (7).

NOTE

Prior to removal, tag leads for installation.

6. Disconnect jumper harness leads 28B (1) and 58J (2) from fuel level sender (35) and remove jumper harness (5).
7. Remove nine locknuts (9) and washers (10) securing access cover (11) to fuel tank (18). Discard locknuts (9).
8. Remove access cover (11), gasket (15), and retainer (33) from fuel tank (18). Discard gasket (15).
9. Mark position of fuel tubes (12), (34), and (13) on access cover (11).

NOTE

Note position of fuel strainer for installation.

10. Remove fuel strainer (14) from fuel supply tube (12).
11. Remove fuel supply tube (12) from access cover (11).
12. Remove fuel return tube (34) from access cover (11).

NOTE

- Perform step 13 if vehicle is equipped with vehicular heater and auxiliary fuel line.
- Vehicles not equipped with a vehicular heater and auxiliary fuel line will have plugs instead of fuel supply tubes.

13. Remove two fuel supply tubes (13) from access cover (11).
14. Remove vent valve (4) and grommet (3) from access cover (11).
15. Remove vent line (19) from tee (20).
16. Loosen clamp (16) and remove filler spout hose (17) from tank (18).
17. Remove three capscrews (22), washers (24), lockwashers (23), and heat shield (21) from fuel tank (18). Discard lockwashers (23).

d. Cleaning and Inspection

WARNING

Drycleaning solvent is flammable and will not be used near an open flame. A fire extinguisher will be kept nearby when the solvent is used. Use only in well-ventilated places. Failure to do this may result in injury to personnel or damage to equipment.

3-25. FUEL TANK AND SHIELD MAINTENANCE (Cont'd)

1. Use drycleaning solvent to clean access cover (11), fuel supply line (31), fuel return line (30), auxiliary fuel supply and return lines (25), crossover hose (27.2), fuel supply tube (12), fuel return tube (34), fuel supply tubes (13), and inside of fuel tank (18).
2. Inspect access cover (11), fuel supply line (31), fuel return line (30), fuel supply tube (12), fuel return tube (34), strainer (14), tee (20), fitting (32), vent valve (4), and grommet (3) for cracks, wear, and breaks. Replace if cracked, worn, or broken.
3. Inspect auxiliary fuel supply and return lines (25), crossover hose (27.2), and fuel supply tubes (13) for cracks, wear, and breaks, if installed. Replace if cracked, worn, or broken.
4. Inspect fuel level sender (35) for damage. Replace if damaged.

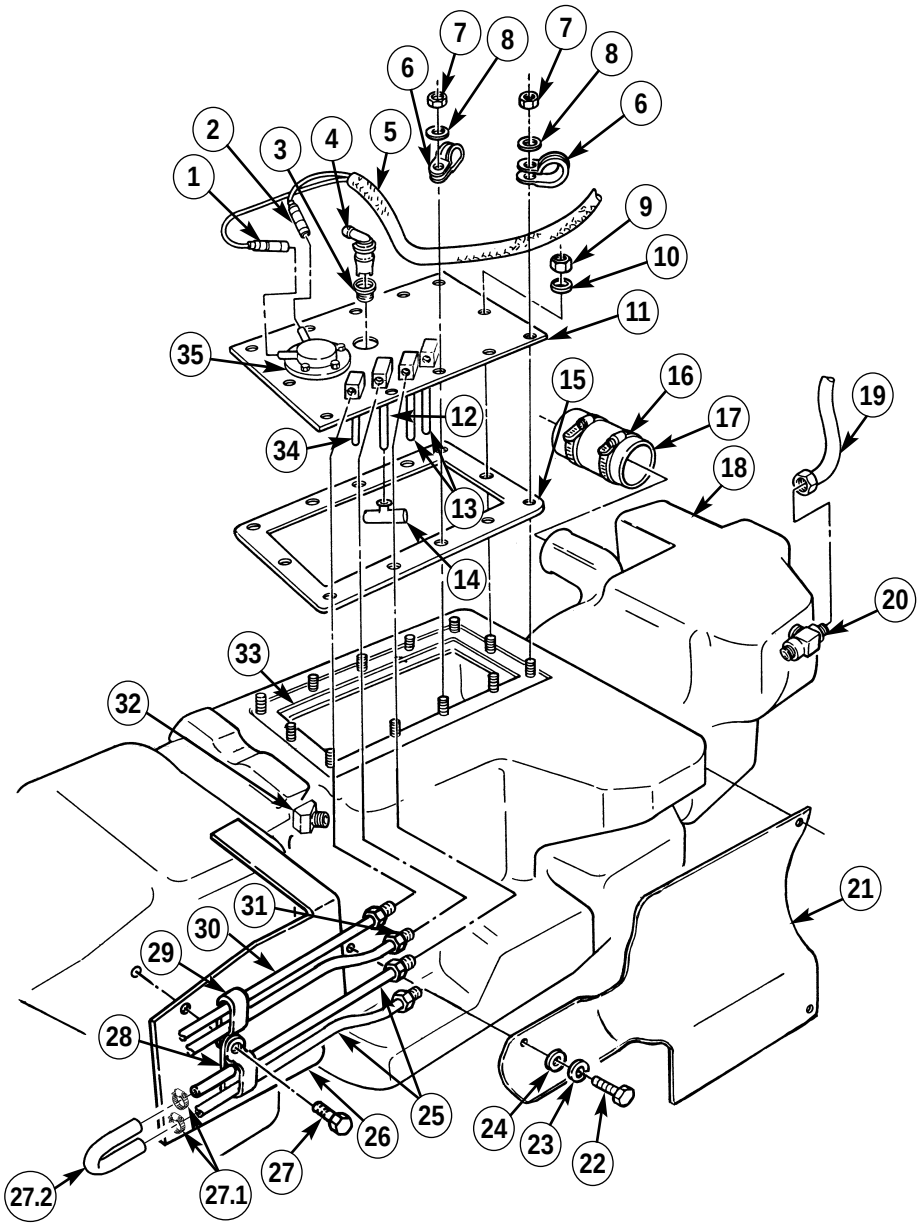

3-25. FUEL TANK AND SHIELD MAINTENANCE (Cont'd)

e. Assembly

NOTE

- Use sealing compound on all vent line and fuel line connector threads before installation.
- Use fittings from old tank if installing new tank.

1. Install heat shield (21) on fuel tank (18) with three lockwashers (23), washers (24), and capscrews (22).
2. Install vent line (19) on tee fitting (20).
3. Install filler spout hose (17) on tank (18) and tighten clamp (16).
4. Apply sealing compound to threads of fuel supply tube (12). Install and align fuel supply tube (12) on access cover (11).
5. Apply sealing compound to threads of fuel return tube (33). Install and align fuel return tube (33) on access cover (11).

NOTE

Perform step 6 if vehicle is equipped with vehicular heater and auxiliary fuel line.

6. Apply sealing compound to threads of fuel supply tubes (13). Install and align two fuel supply tubes (13) on access cover (11).
7. Install grommet (3) and vent valve (4) on access cover (11).
8. Install fuel strainer (14) on fuel supply tube (12).
9. Apply adhesive to threads of nine locknuts (9). Install retainer (32), gasket (15), and access cover (11) on fuel tank (18) with nine washers (10) and locknuts (9). Tighten locknuts (9) to 72 lb-in. (8 N·m).
10. Connect jumper harness leads 28B (1) and 58J (2) to fuel level sender (34).
11. Apply adhesive to threads of two locknuts (7). Install jumper harness (5) on access cover (11) with two clamps (6), washers (8), and locknuts (7). Tighten locknuts (7) to 72 lb-in. (8 N·m).
12. Connect fuel supply line (31) to fuel supply tube (12), and fuel return line (30) to fuel return tube (33).

NOTE

Perform step 13 if vehicle is equipped with an vehicular heater and auxiliary fuel line.

13. Connect auxiliary fuel supply and return lines (25) to fuel supply tubes (13).
14. Connect crossover hose (27.2) to auxiliary fuel supply and return lines (25) and secure with two clamps (27.1)
15. Install shield (26), return line (30), supply line (31), clamp (29), and auxiliary fuel supply and return lines (25) and clamp (28), if installed, on fuel tank (18) with capscrew (27).

3-25. FUEL TANK AND SHIELD MAINTENANCE (Cont'd)

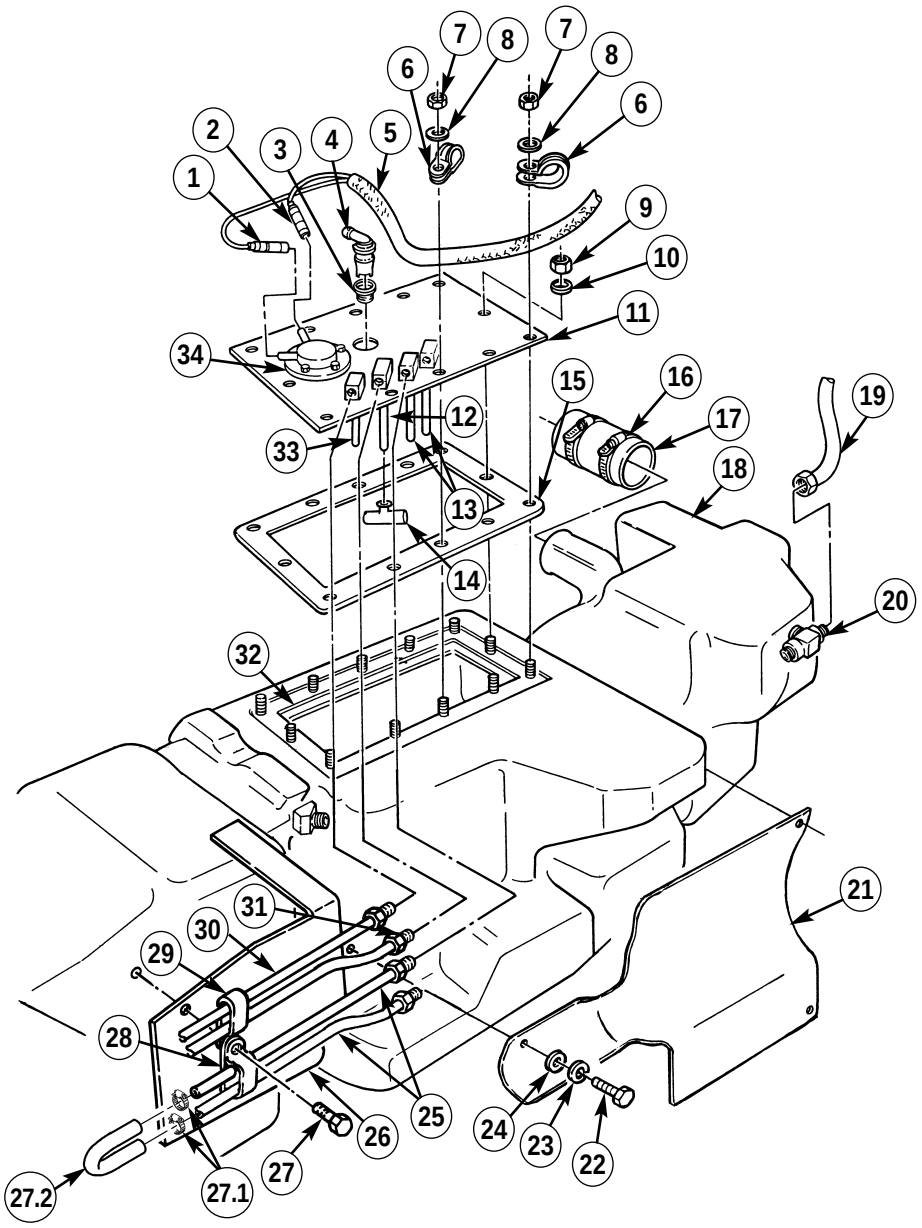

3-25. FUEL TANK AND SHIELD MAINTENANCE (Cont'd)

f. Installation

1. Position fuel tank (5) under vehicle.
2. Install jumper harness (6) in clamp (7) and bend clamp (7) up.
3. Connect jumper harness leads 58J (8) and 28B (10) to body wiring harness (9).

NOTE

Use sealing compound on all vent line connector threads before installation.

4. Connect vent line (4) to fuel tank (5) with clamp (3), washer (2), and locknut (1). Tighten locknut (1) to 6 lb-ft (8 N·m).
5. Connect vent line (12) to fitting (11) on fuel tank (5).

NOTE

Apply adhesive to threads of capscrews before installation.

6. Install rear strap (23) on strap bracket (22) with capscrew (21), washer (20), and nut (19). Tighten nut (19) to 37 lb-ft (50 N·m).

NOTE

Ensure front straps are flush with fuel tank and to right side of dimple in slot.

7. Raise fuel tank (5) and install two support straps (24) to straps (17) and (23) with two capscrews (18), washers (25), and nuts (26). Do not tighten nuts (26).
8. Connect vent line (12) to tee (31) on fuel tank (5).
9. Secure vent line (12) to body (34) with clamp (33) and screw (32).
10. Connect fuel supply hoses (13) and (30) to fuel return and supply lines (16) and (15) and tighten clamps (14).

NOTE

Perform step 11 if vehicle is equipped with vehicular heater.

11. Connect fuel supply hose (29) to vehicular heater fuel supply line (27) and tighten clamp (28).

NOTE

Ensure upper and lower straps are 1/2 in. (13 mm) apart after tightening nuts. Straps should not touch when properly installed. Straps must be replaced if upper or lower straps touch.

12. Tighten nuts (26) to 23-27 lb-ft. (31-37 N·m).
13. Connect vent line (38) to filler spout (39).

NOTE

Perform steps 14, 15, and 17 if vehicle is equipped with new vent line assembly.

14. Connect vent line (38) to elbow (38.2).
15. Connect vent line (35.2) to elbow (38.1).
16. Secure vent line (38) to body (34) with clamp (35), washer (36), capscrew (47), washer (36), and locknut (37). Tighten locknut (37) to 6 lb-ft (8 N·m).
17. Secure vent line (35.2) to vent line (38) with tiedown strap (35.1).
18. Install filler spout (39) into hose (46) and tighten clamp (45).
19. Install filler spout (39) to body (34) with clamp (42), washer (43), capscrew (44), washer (41), and locknut (40). Tighten locknut (40) to 6 lb-ft (8 N·m).

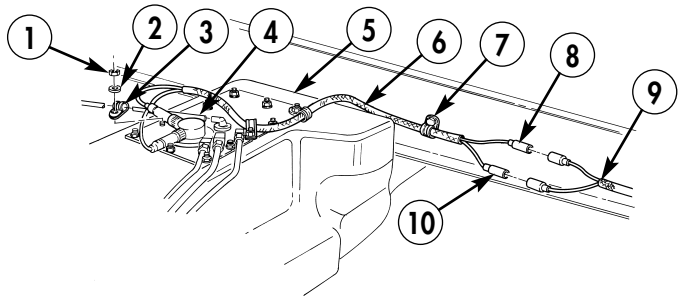

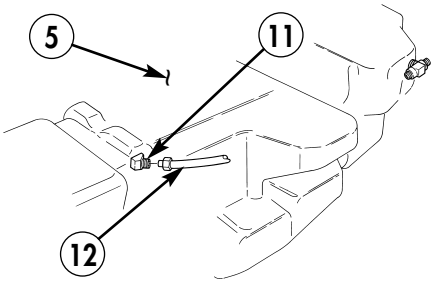

3-25. FUEL TANK AND SHIELD MAINTENANCE (Cont'd)

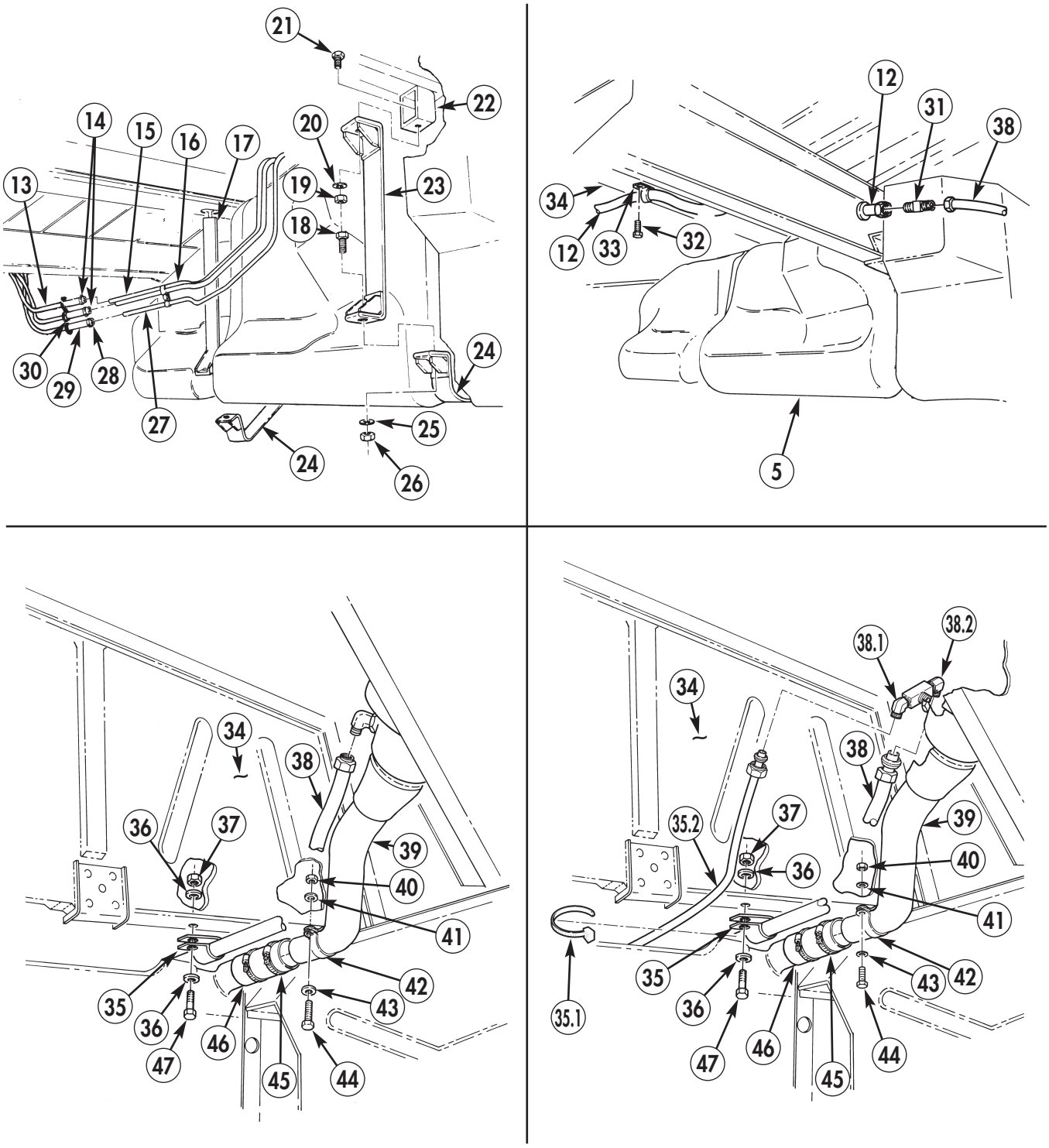

FOLLOW-ON TASKS:
- Install right rear underbody armor (M1114 only) (para. 11-39).
- Install rear propeller shaft (para. 6-4).
- Connect battery ground cables (para. 4-68).
- Fill fuel tank (TM 9-2320-387-10) and check for leaks.

3-26. FUEL TANK SUPPLY AND RETURN LINES REPLACEMENT

This task covers:

a. Removal **b. Installation**

INITIAL SETUP:

Tools
General mechanic's tool kit: automotive (Appendix B, Item 1)

Materials/Parts
Two locknuts (Appendix G, Item 77)

Manual References
TM 9-2320-387-10
TM 9-2320-387-24P

Equipment Condition
Engine right splash shield removed (para. 10-24).

General Safety Instructions
Do not perform this procedure near fire, flames, or sparks.

Maintenance Level
Unit

WARNING

Diesel fuel is highly flammable. Do not perform this procedure near fire, flames, or sparks. Severe injury or death may result.

a. Removal

CAUTION

Cover or plug all open hoses and connections immediately after disconnection to prevent contamination. Remove all plugs prior to connection.

NOTE

Have drainage container ready to catch fuel.

1. Loosen four clamps (7) and disconnect hoses (6) from fuel tank return and supply lines (8).
2. Remove two locknuts (1), capscrews (5), washers (4), clamps (3), and return and supply lines (8) from front body bracket (2) and rear body bracket (10). Discard locknuts (1).
3. Remove three clips (9) from fuel supply and return lines (8).

b. Installation

1. Install return and supply lines (8) on front body bracket (2) and rear body bracket (10) with two clamps (3), washers (4), capscrews (5), and locknuts (1).
2. Connect supply and return lines (8) to four hoses (6) and tighten clamps (7).
3. Secure fuel supply and return lines (8) together with three clips (9).

3-26. FUEL TANK SUPPLY AND RETURN LINES REPLACEMENT (Cont'd)

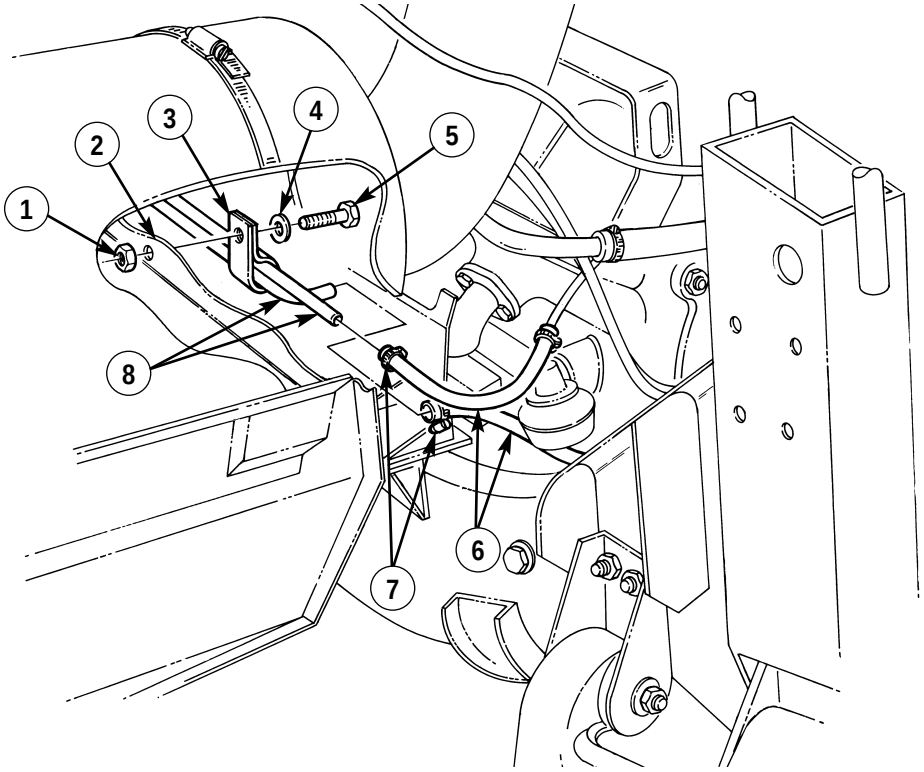

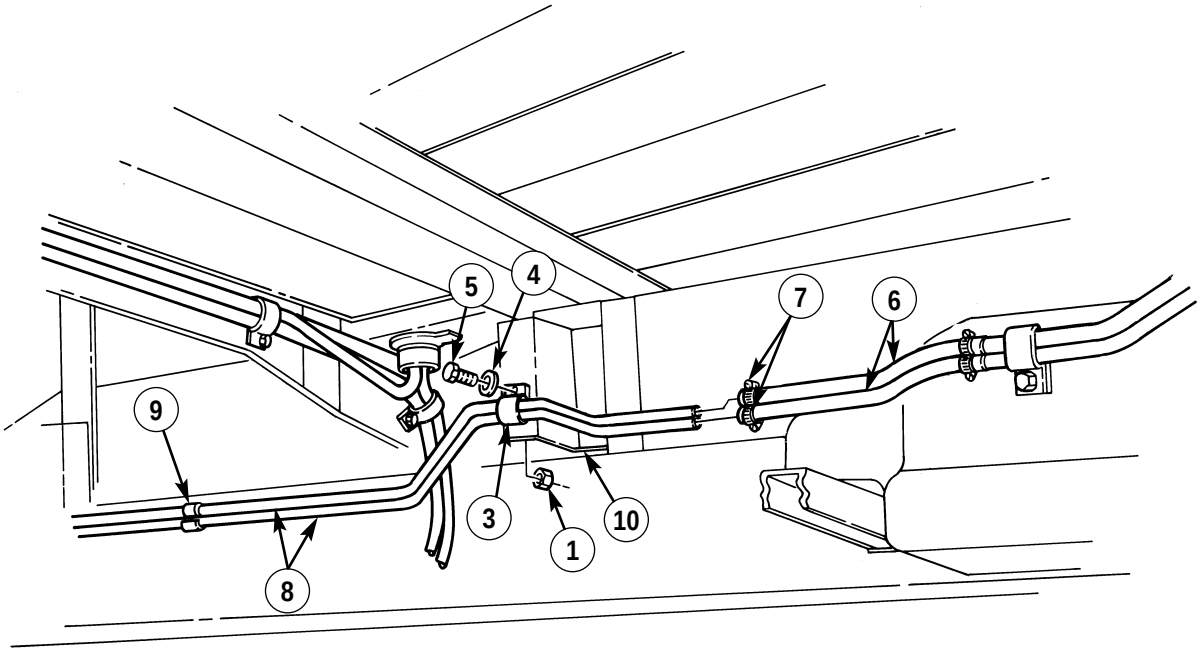

FOLLOW-ON TASKS:
- Install engine right splash shield (para. 10-24).
- Fill fuel tank (TM 9-2320-387-10) and check for fuel leaks.

3-27. AUXILIARY FUEL PICKUP AND RETURN LINES REPLACEMENT

This task covers:

a. Removal **b. Installation**

INITIAL SETUP:

Tools
General mechanic's tool kit: automotive (Appendix B, Item 1)

Materials/Parts
Sealing compound (Appendix C, Item 60)

Manual References
TM 9-2320-387-24P

Equipment Condition
Fuel tank removed (para. 3-25).

General Safety Instructions
Do not perform this procedure near fire, flames, or sparks.

Maintenance Level
Unit

WARNING

Diesel fuel is highly flammable. Do not perform this procedure near fire, flames, or sparks. Severe injury or death may result.

a. Removal

CAUTION

Cover or plug all open hoses and connections immediately after disconnection to prevent contamination. Remove all plugs prior to connection.

NOTE

Have drainage container ready to catch fuel.

1. Remove two clamps (6.1) and crossover hose (6.2) from auxiliary fuel return line (6) and auxliary fuel pickup line (4).

1.1. Remove screw (5) and clamp (7) from fuel return line (6), fuel pickup line (4), and fuel line clamp (8).

2. Remove fuel pickup line (4) from fuel tube (3) on fuel tank (1).
3. Remove fuel return line (6) from fuel tube (2).

b. Installation

1. Apply sealing compound to threads of fuel return line (6) and fuel pickup line (4).
2. Install fuel return line (6) on fuel tube (2) in fuel tank (1).
3. Install fuel pickup line (4) on fuel tube (3).
4. Install clamp (7) on fuel return line (6) and fuel pickup line (4) and secure to fuel line clamp (8) with screw (5).
5. Install crossover hose (6.2) on auxiliary fuel return line (6) and fuel auxiliary pickup line (4) with two clamps (6.1).

3-27. AUXILIARY FUEL PICKUP AND RETURN LINES REPLACEMENT (Cont'd)

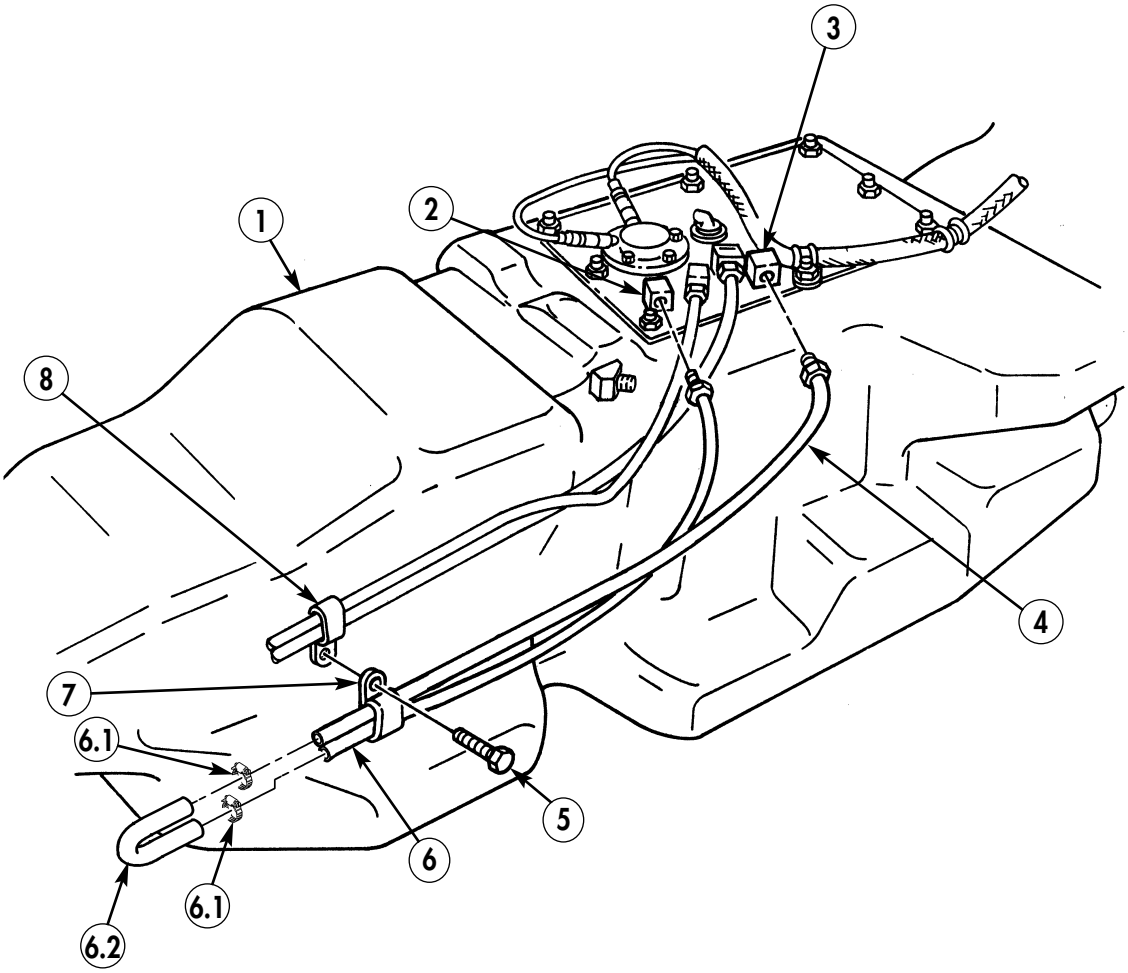

FOLLOW-ON TASK: Install fuel tank (para. 3-25).

3-28. FUEL TANK VENT LINE AND FILTER REPLACEMENT

This task covers:

a. Removal **b. Installation**

INITIAL SETUP:

Tools
General mechanic's tool kit:
automotive (Appendix B, Item 1)

Materials/Parts
Tiedown strap (Appendix G, Item 321)
Locknut (Appendix G, Item 77)

Manual References
TM 9-2320-387-10
TM 9-2320-387-24P

Equipment Condition
- Fuel tank removed (para. 3-25).
- Hood raised and secured (TM 9-2320-387-10).

Maintenance Level
Unit

a. Removal

CAUTION

Cover or plug all open hoses and connections immediately after disconnection to prevent contamination. Remove all plugs prior to connection.

NOTE

- For fuel tank vent line filter replacement, perform steps 5, 8, and 9 only.
- Insulation may need to be removed to access vent and fuel lines.

1. Remove clip (9) from fuel tank vent line (3) and vent line (6).
2. Remove two capscrews (2) securing clamps (1) and (7) and vent lines (3) and (6) to brackets (8).
3. Remove tiedown strap (4) from vent line (6) and fuel lines (5). Discard tiedown strap (4).
4. Disconnect vent line (3) from elbow (16).
5. Loosen two clamps (14) and remove vent line (15) from vent line filter (13) and elbow (16).
6. Remove two clamps (14) from vent line (15).
7. Remove two clamps (1) from vent line (3).

NOTE

Perform step 8 only when deep water fording kit is installed.

8. Disconnect deep water fording vent line (19) from vent line filter (13).
9. Remove locknut (12), washer (11), capscrew (18), clamp (10), and vent line filter (13) from body bracket (17). Discard locknut (12).

b. Installation

NOTE

For fuel tank vent line filter replacement, perform steps 1, 2, and 5 only.

1. Install clamp (10) and vent line filter (13) on body bracket (17) with capscrew (18), washer (11), and locknut (12).

NOTE

Perform step 2 only when deep water fording kit is installed.

2. Connect deep water fording vent line (19) to vent line filter (13).
3. Install two clamps (1) on vent line (3).
4. Install two clamps (14) on vent line (15).

3-28. FUEL TANK VENT LINE AND FILTER REPLACEMENT (Cont'd)

5. Install vent line (15) on vent line filter (13) and elbow (16) and tighten two clamps (14).
6. Connect vent line (3) to elbow (16).
7. Install tiedown strap (4) around vent line (3), vent line (6), and fuel lines (5).
8. Secure vent lines (3) and (6) and two clamps (1) and (7) on brackets (8) with two capscrews (2).
9. Secure vent line (3) to vent line (6) with clip (9).
10. Install insulation if removed.

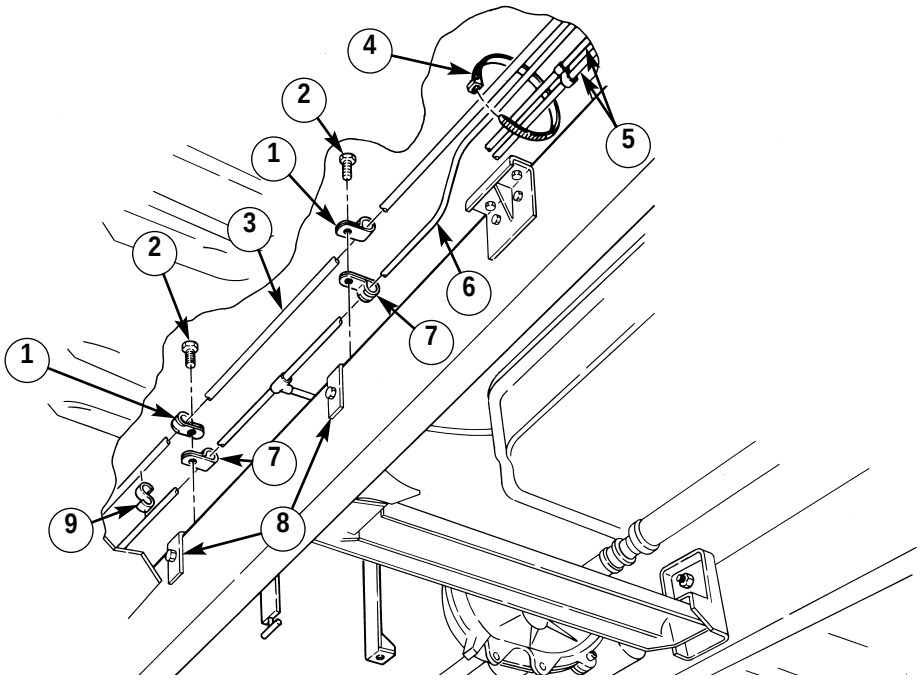

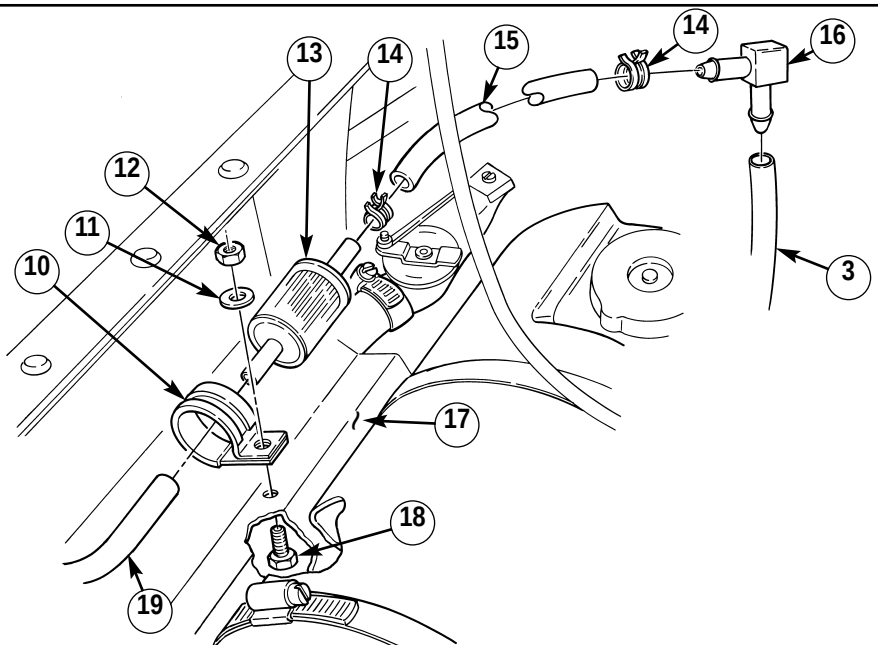

FOLLOW-ON TASKS: • Install fuel tank (para. 3-25).
• Lower and secure hood (TM 9-2320-387-10).

3-29. FUEL TANK FILLER CAP AND SPOUT MAINTENANCE

This task covers:

a. Removal
b. Inspection
c. Installation

INITIAL SETUP:

Tools
General mechanic's tool kit: automotive (Appendix B, Item 1)
Maintenance and repair shop equipment: automotive (Appendix B, Item 2)

Materials/Parts
Locknut (Appendix G, Item 77)
Sealing compound (Appendix C, Item 64)
Tiedown strap (Appendix G, Item 322)

Manual References
TM 9-2320-387-10
TM 9-2320-387-24P

Equipment Condition
- Fuel tank drained (para. 3-25).
- Right rear underbody armor removed (M1114 only) (para. 11-39).

General Safety Instructions
Do not perform this procedure near fire, flames, or sparks.

Maintenance Level
Unit

WARNING

Diesel fuel is highly flammable. Do not perform this procedure near fire, flames, or sparks. Severe injury or death may result.

a. Removal

NOTE

Perform steps 1.1, 2, and 7.1 if vehicle is equipped with new vent line assembly.

1. Remove filler cap (6) and detach cap chain clip (7) from filler spout (11).
1.1. Remove tiedown strap (17.2) from vent lines (17.1) and (1). Discard tiedown strap (17.2)
2. Disconnect vent lines (1) and (17.1) from elbows (2) and (2.2).
2.1. Disconnect vent line (1) from elbow (2.2).
3. Remove three nuts (3), washers (4), capscrews (5), and washers (4) from spout mounting ring (8).
4. Loosen clamp (16) securing filler spout (11) to hose (17).
5. Remove locknut (12), washer (13), capscrew (15), washer (13), and clamp (14) from filler spout (11). Discard locknut (12).
6. Push filler spout (11) out of spout mounting ring (8) and remove filler spout (11) from hose (17).
7. Remove elbows (2) and (2.2) from tee fitting (2.1) or elbow (2.2) from filler spout (11).
7.1. Remove tee fitting (2.1) from filler spout (11).
8. Using handle (9), remove screen (10) from filler spout (11).

b. Inspection

Inspect screen (10) for damage, debris, or blockage. Replace if damaged, or if debris or blockage is detected.

c. Installation

NOTE

Perform steps 1.1, 6, and 6.2 if vehicle is equipped with new vent line assembly.

1. Apply sealing compound to elbows (2) and (2.2) and install in tee fitting (2.1) or elbow (2.2) on filler spout (11).

3-29. FUEL TANK FILLER CAP AND SPOUT MAINTENANCE (Cont'd)

1.1. Apply sealing compound to tee fitting (2.1) and install on filler spout (11).
2. Align filler spout (11) with hose (17) and push filler spout (11) into hose (17).
3. Install filler spout (11) on spout mounting ring (8) with three washers (4), capscrews (5), washers (4), and nuts (3).
4. Tighten clamp (16) on hose (17).
5. Install filler spout (11) on body (18) with clamp (14), washer (13), capscrew (15), washer (13), and locknut (12). Tighten locknut (12) to 6 lb-ft (8 N·m).
6. Connect vent line (1) to elbow (2.2).
6.1. Connect vent line (17.1) to elbow (2).
6.2. Secure vent line (1) to vent line (17.1) with tiedown strap (17.2).
7. Using handle (9), install screen (10) in filler spout (11).
8. Attach filler cap chain clip (7) to filler spout (11) and install filler cap (6).

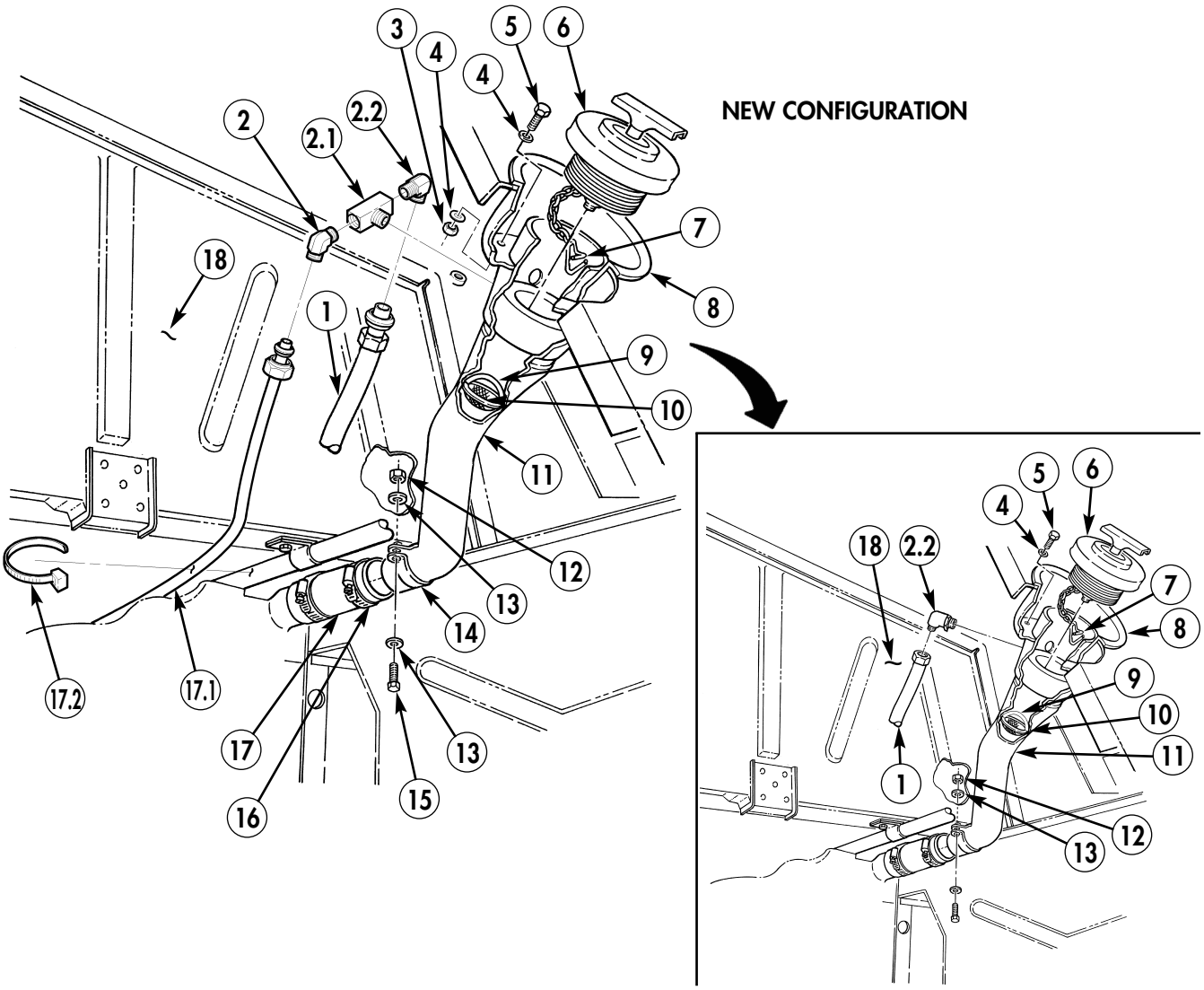

FOLLOW-ON TASKS: • Install right rear underbody armor (M1114 only) (para. 11-39).
• Fill fuel tank (TM 9-2320-387-10) and check filler spout for fuel leaks.

3-30. FUEL TANK FILLER SPOUT VENT LINE REPLACEMENT

This task covers:

a. Removal **b. Inspection**

INITIAL SETUP:

Tools

General mechanic's tool kit: automotive (Appendix B, Item 1)
Maintenance and repair shop equipment: automotive (Appendix B, Item 2)

Materials/Parts

Locknut (Appendix G, Item 77)
Tiedown strap (Appendix G, Item 322)
Adhesive (Appendix C, Item 2)
Sealing compound (Appendix C, Item 61)
Elbow (Appendix G, Item 31.1)

Manual References

TM 9-2320-387-24P

Equipment Condition

- Rear propeller shaft removed (para. 6-4).
- Right rear underbody armor removed (M1114 only) (para. 11-39).

Maintenance Level

Unit

a. Removal

NOTE

Perform steps 1, 3, 4, 6, and 7 if equipped with new style vent line assembly.

1. Remove clamp (3) and vent line (1) from fuel pump (2).
2. Disconnect vent line (5) from elbow (6) on fuel filler neck (7).
3. Disconnect vent line (14) from elbow (5.1) on fuel filler neck (7).
4. Remove tiedown strap (13) from vent lines (5) and (14).
5. Remove locknut (12), washer (11), capscrew (8), washer (9), and clamp (10) from body (4). Discard locknut (12).
6. Remove two capscrews (15) from clamps (17) on frame rail (16).
7. Remove vent line (14) and clamps (17) from vehicle.

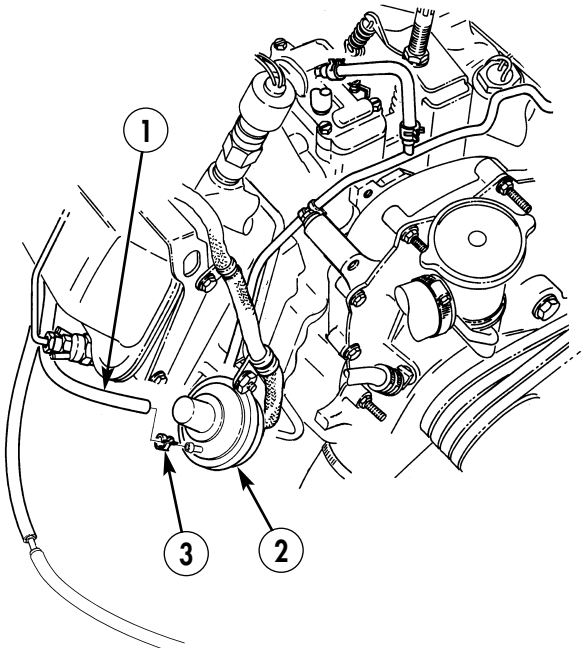

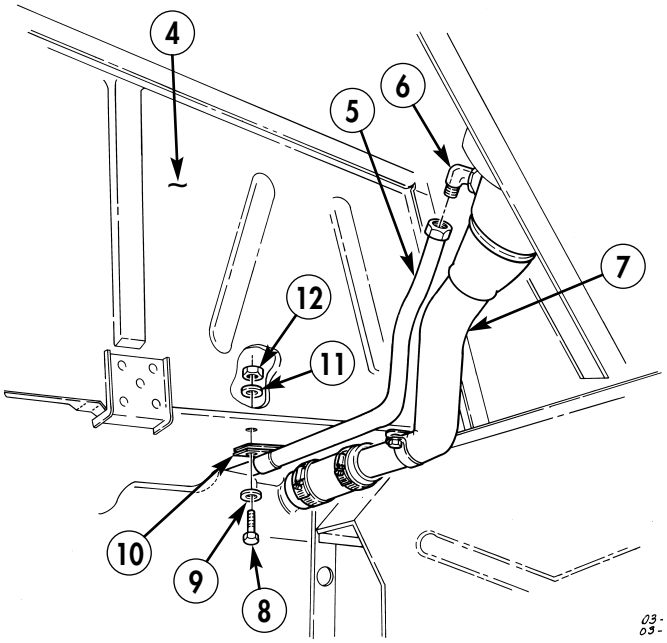

3-30. FUEL TANK FILLER SPOUT VENT LINE REPLACEMENT (Cont'd)

8. Disconnect vent line (5) from fitting (18).
9. Remove fitting (18) from vent line (19).
10. Remove capscrew (22) from clamp (24) on crossmember (23) and remove clamp (24) from vent line (19).
11. Loosen two nuts (21) to allow access to elbow (25).
12. Disconnect vent line (19) from elbow (25) on fuel tank (26), cut vent line (19) closest to fuel tank (26), and remove vent line (19) from crossmember (23) and vehicle.

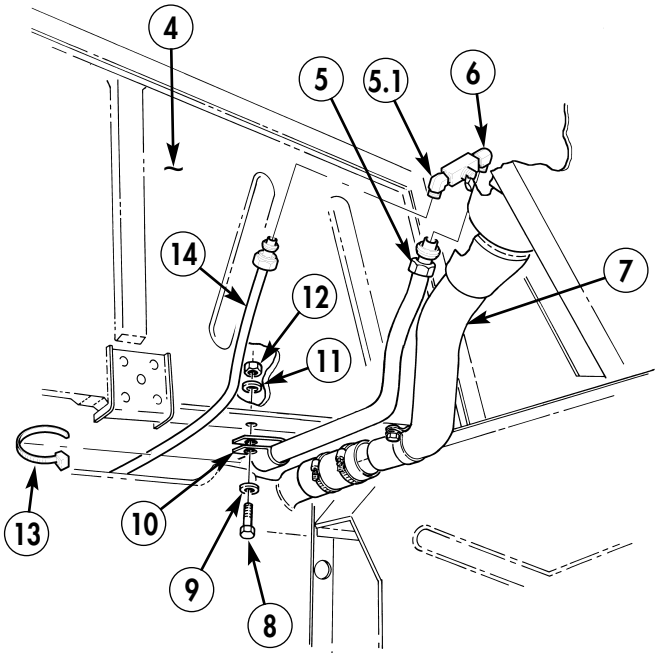

NEW CONFIGURATION

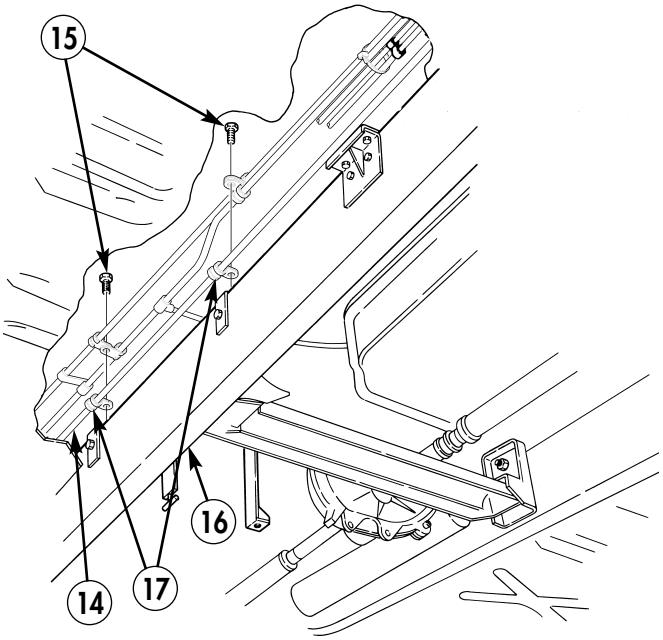

NEW CONFIGURATION

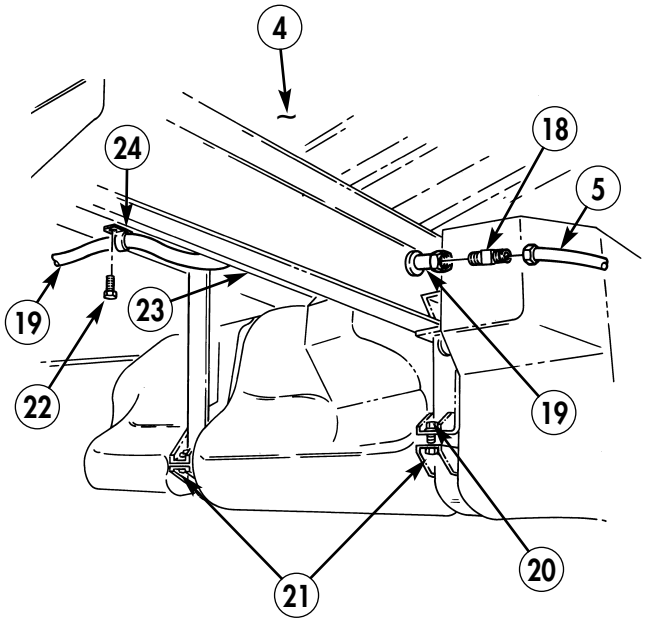

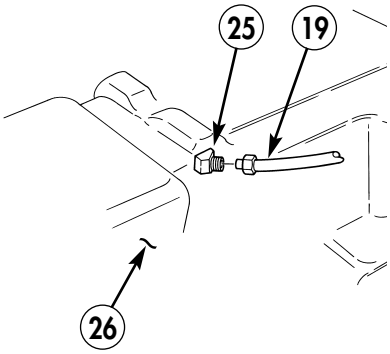

3-30. FUEL TANK FILLER SPOUT VENT LINE REPLACEMENT (Cont'd)

b. Installation

1. Position vent line (2) on vehicle and crossmember (13).
2. Install fitting (6), sleeve (4), and compression ring (5) on end of vent line (2), closest to fuel tank (3).

NOTE

Use sealing compound on all vent line connectors before installation.

3. Connect vent line (2) to elbow (1) on fuel tank (3).
4. Install fitting (8) on vent line (2).
5. Connect vent line (9) to fitting (8).
6. Install clamp (14) on vent line (2) and clamp (14) on frame rail (13) with capscrew (12).

NOTE

Upper and lower straps should be approximately 1/2 in. (13 mm) apart after tightening nuts. Straps should not touch when properly installed. Straps must be replaced if upper and lower straps touch.

7. Apply adhesive to threads of capscrews (10) and tighten nuts (11) to 23-27 lb-in (2.6-3 N•m).

NOTE

Perform steps 8, 9, 11, 12, and 14 if equipped with new style vent line assembly.

8. Position vent line (18) and two clamps (17) on vehicle.
9. Install two clamps (17) on frame rail (16) with capscrews (15).
10. Install vent line (9) and clamp (25) on body (19) with washer (24), capscrew (23), washer (27), and locknut (28).
11. Install tiedown strap (26) on vent lines (9) and (18).
12. Connect vent line (18) to elbow (20) on fuel filler neck (22).
13. Connect vent line (9) to elbow (21) on fuel filler neck (22).
14. Install vent line (18) on fuel pump (29) with clamp (30).

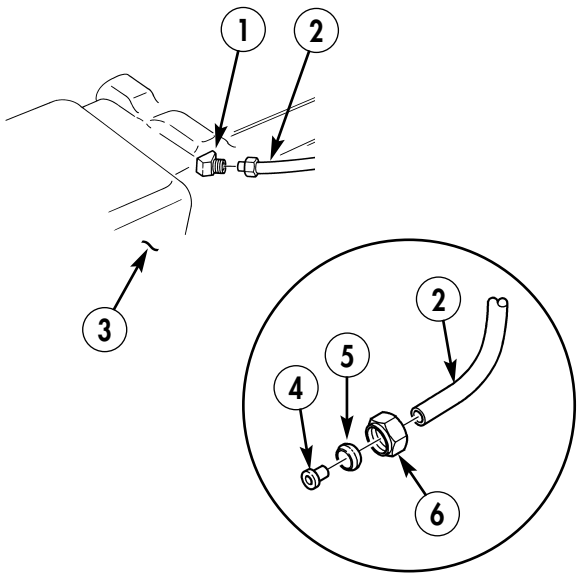

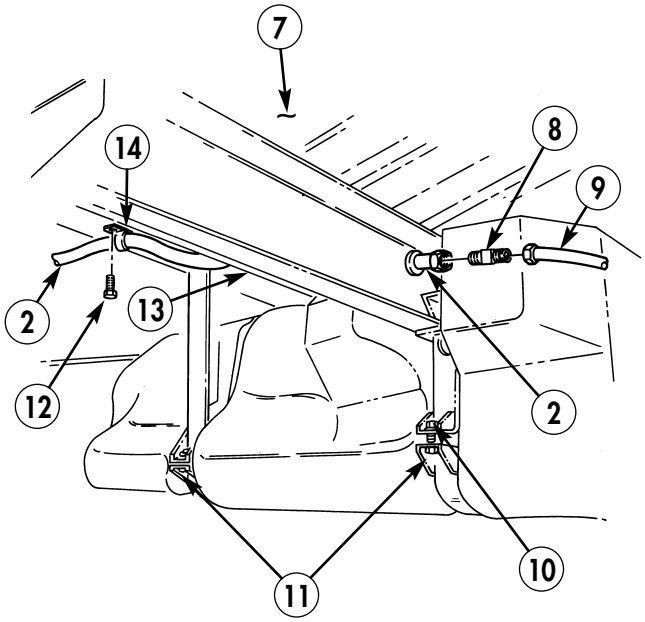

3-30. FUEL TANK FILLER SPOUT VENT LINE REPLACEMENT (Cont'd)

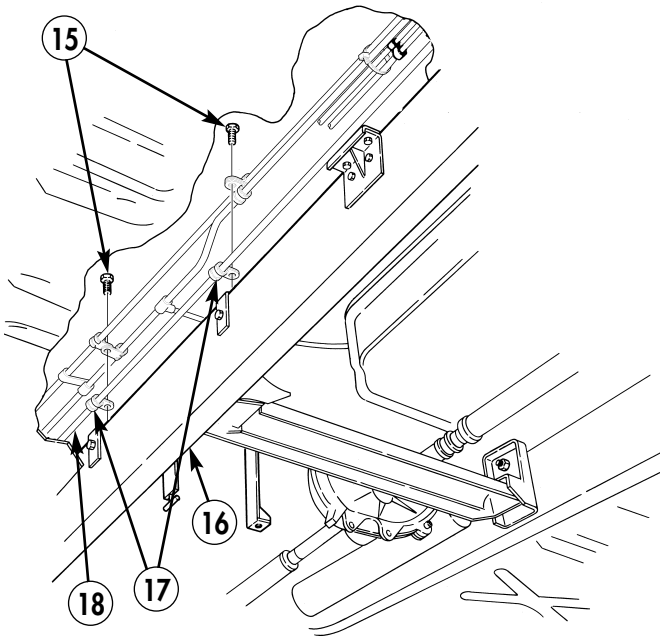

NEW CONFIGURATION

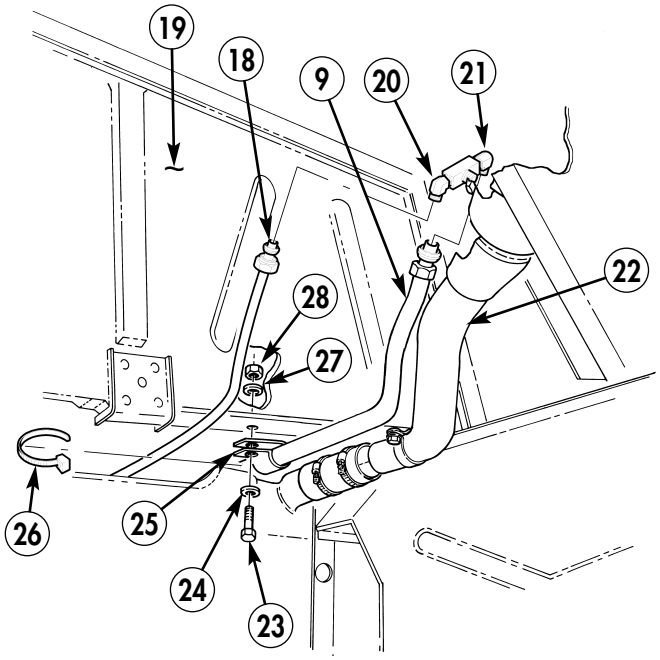

NEW CONFIGURATION

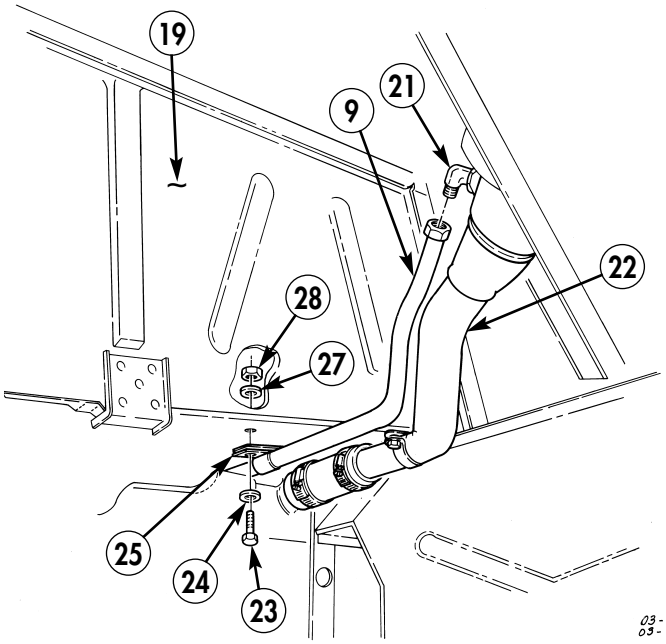

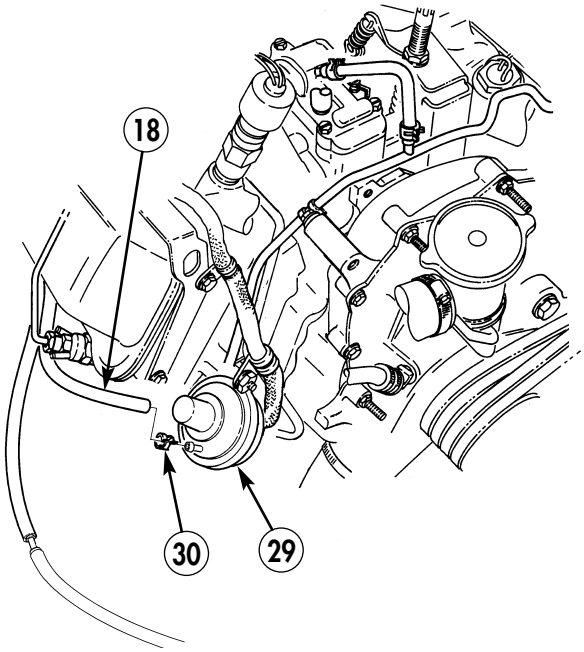

3-31. FILLER SPOUT HOSE REPLACEMENT

This task covers:

a. Removal **b. Installation**

INITIAL SETUP:

Tools

General mechanic's tool kit: automotive (Appendix B, Item 1)

Manual References

TM 9-2320-387-10
TM 9-2320-387-24P

Equipment Condition

- Fuel tank drained (para. 3-25).
- Right rear underbody armor removed (M1114 only) (para. 11-39).

General Safety Instructions

Do not perform this procedure near fire, flames, or sparks.

Maintenance Level

Unit

WARNING

Diesel fuel is highly flammable. Do not perform this procedure near fire, flames, or sparks. Severe injury or death may result.

a. Removal

1. Loosen clamps (4) and (3) securing hose (1) to fuel tank (5) and filler spout (2).
2. Slide hose (1) onto filler spout (2) until disconnected from fuel tank (5). Remove hose (1) from filler spout (2).

b. Installation

NOTE

Position clamps attaching filler hose to fuel tank as shown.

1. Install hose (1) on filler spout (2) and slide onto filler spout (2) until hose (1) clears fuel tank (5).
2. Connect hose (1) to fuel tank (5) and tighten clamps (3) and (4).

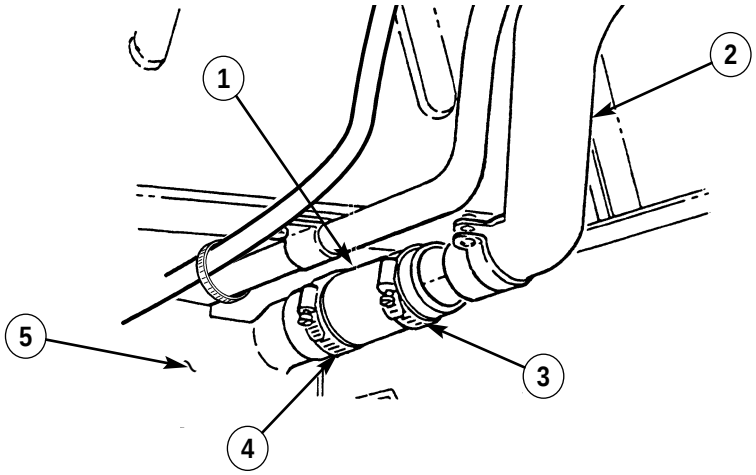

FOLLOW-ON TASKS:
- Install right rear underbody armor (M1114 only) (para. 11-39).
- Fill fuel tank (TM 9-2320-387-10) and check for leaks.

3-32. FUEL TANK HANGERS REPLACEMENT

This task covers:

a. Removal **b. Installation**

INITIAL SETUP:

Tools

General mechanic's tool kit:
automotive (Appendix B, Item 1)
Maintenance and repair shop equipment:
automotive (Appendix B, Item 2)

Materials/Parts

Adhesive (Appendix C, Item 2)

Manual References

TM 9-2320-387-24P

Equipment Condition

Fuel tank removed (para. 3-25).

Maintenance Level

Unit

a. Removal

1. Remove two nuts (3), washers (4), capscrews (5), and rear hangers (7) from supports (6).
2. Twist two front hangers (9) until tee handles (2) clear slots (11) in support (1) and remove front hangers (9).
3. Inspect four insulators (8) on front and rear hangers (9) and (7). Remove insulators (8), if damaged.

b. Installation

1. Install four insulators (8) on front and rear hangers (9) and (7), if removed.
2. Install two front hangers (9) by inserting tee handles (2) up through slots (11) in support (1). Twist hangers (9) so that tee handles (2) are resting across slots (11) and against side of ridge (10).

NOTE

Apply adhesive to threads of screws before installation.

3. Install two rear hangers (7) on supports (6) with capscrews (5), washers (4), and nuts (3). Tighten nuts (3) to 37 lb-ft (50 N·m).

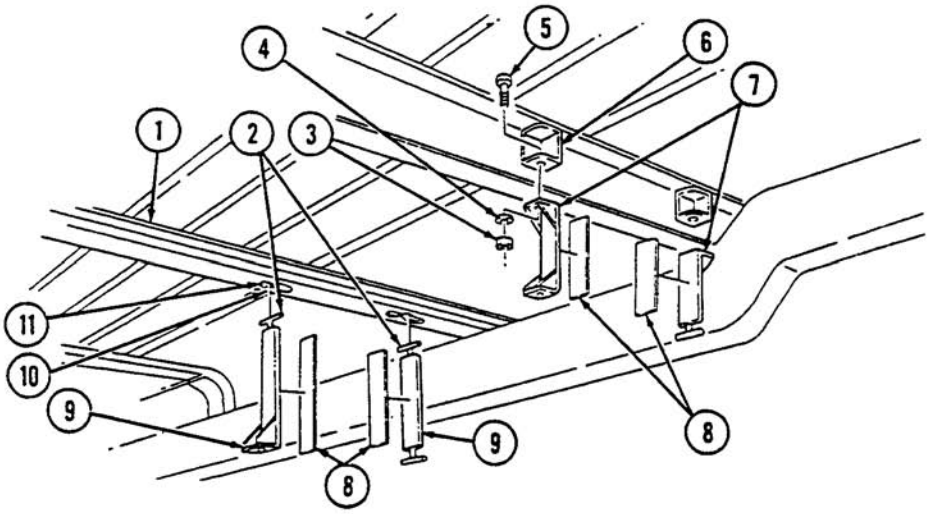

FOLLOW-ON TASK: Install fuel tank (para. 3-25).

3-33. FUEL FILTER MAINTENANCE

This task covers:

a. Removal
b. Installation
c. Bleeding

INITIAL SETUP:

Tools
General mechanic's tool kit: automotive (Appendix B, Item 1)
Maintenance and repair shop equipment: automotive (Appendix B, Item 2)

Materials/Parts
Two lockwashers (Appendix G, Item 145)
Fuel filter bleeder tool (Appendix D, Fig. D-38) (optional)
Sealing compound (Appendix C, Item 61)

Manual References
TM 9-2320-387-10
TM 9-2320-387-24P

Equipment Condition
- Hood raised and secured (TM 9-2320-387-10).
- Engine access cover removed (para. 10-22).
- Fuel pressure transducer removed (para. 4-30).

General Safety Instructions
Do not perform this procedure near fire, flames, or sparks.

Maintenance Level
Unit

WARNING

Diesel fuel is highly flammable. Do not perform this procedure near fire, flames, or sparks. Severe injury or death may result.

a. Removal

CAUTION

Cover or plug all hoses and connections immediately after disconnection to prevent contamination. Remove all plugs prior to connection.

NOTE

Have drainage container ready to catch fuel.

1. Loosen two hose clamps (2) and disconnect fuel inlet hose (1) and fuel outlet hose (12) from fuel filter fittings (5).
2. Loosen hose clamp (8) and disconnect fuel filter drain hose (9) from fuel filter fitting (5).
3. Pull back insulation to allow access to capscrews (3), and remove two capscrews (3), lockwashers (4), and fuel filter bracket (10) from body (11). Discard lockwashers (4).
4. Loosen capscrew (6) and remove fuel filter (7) from fuel filter bracket (10).
5. Remove three fittings (5) from fuel filter (7).

b. Installation

1. Apply sealing compound to threads of three fittings (5). Install fittings (5) on fuel filter (7).
2. Install fuel filter (7) on fuel filter bracket (10) and tighten capscrew (6).
3. Install fuel filter bracket (10) on body (11) with two lockwashers (4) and capscrews (3). Tighten capscrews (3) to 15 lb-ft (20 N·m).
4. Connect drain hose (9) to fuel filter fitting (5) and tighten clamp (8) to 10-20 lb-in. (1-2 N·m).
5. Connect fuel inlet hose (1) and fuel outlet hose (12) to fuel filter fittings (5) and tighten two clamps (2) to 10-20 lb-in. (1-2 N·m).

3-33. FUEL FILTER MAINTENANCE (Cont'd)

c. Bleeding

NOTE

The bleeder tool used in steps 2, 3, and 5 is optional. The tool prevents fuel from spilling on engine.

1. Install fuel pressure transducer (para. 4-30).
2. Remove fuel filter bleeder screw (13) and install bleeder tool into hole.
3. Place open end of bleeder tool hose in clean, clear container.
4. Disconnect lead 54A (14) from solenoid (15).

CAUTION

Do not operate starter continuously for more than 20 seconds; wait 10 to 15 seconds between periods of operation. Failure to do this may result in damage to the starter.

5. Crank engine and watch fuel. When air bubbles stop coming through hose, remove bleeder tool, and install bleeder screw (13). Tighten bleeder screw (13) to 40-50 lb-in. (4-6 N·m).
6. Dispose of fuel in accordance with local SOP.
7. Connect lead 54A (14) to fuel solenoid (15).

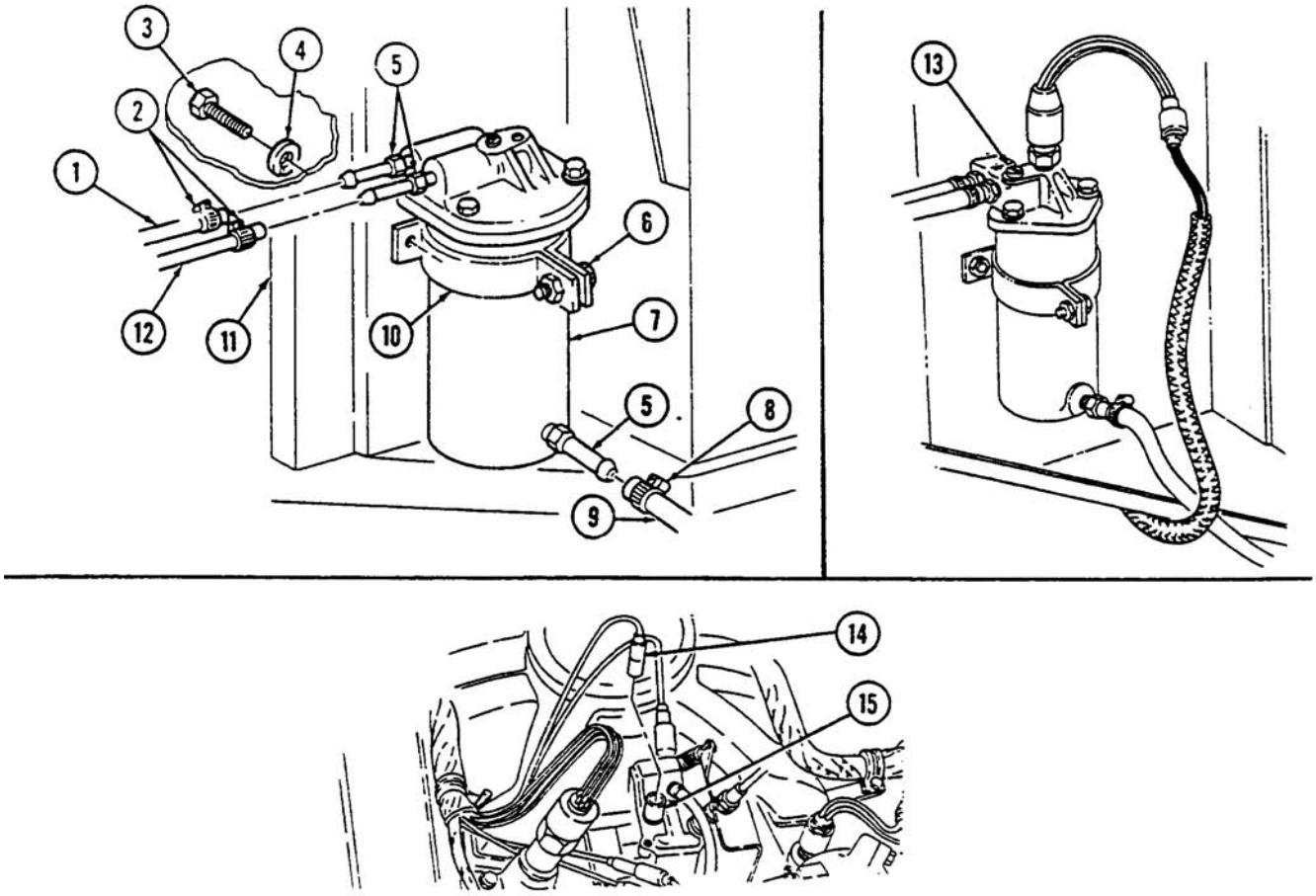

FOLLOW-ON TASKS:
- Start engine (TM 9-2320-387-10) and check for fuel leaks.
- Lower and secure hood (TM 9-2320-387-10).
- Install engine access cover (para. 10-22).

3-34. FUEL FILTER ELEMENT MAINTENANCE

This task covers:

a. Element Removal

b. Cleaning and Inspection

c. Element Installation

INITIAL SETUP:

Tools

General mechanic's tool kit: automotive (Appendix B, Item 1)

Maintenance and repair shop equipment: automotive (Appendix B, Item 2)

Materials/Parts

Fuel/water filter element kit (Appendix G, Item 36)

Manual References

TM 9-2320-387-24P

Equipment Condition

Fuel pressure transducer removed para. 4-30).

General Safety Instructions

- Do not perform this procedure near fire, flames, or sparks.
- Drycleaning solvent is flammable and will not be used near an open flame.

Maintenance Level

Unit

WARNING

Diesel fuel is highly flammable. Do not perform this procedure near fire, flames, or sparks. Severe injury or death may result.

a. Element Removal

CAUTION

Cover or plug all hoses and connections immediately after disconnection to prevent contamination. Remove all plugs prior to connection.

1. Loosen two hose clamps (2) and disconnect fuel inlet hose (1) and fuel outlet hose (15) from fuel filter cover (3).
2. Loosen hose clamp (7) and disconnect fuel filter drain hose (8) from filter housing (6).
3. Remove nut (11), capscrew (9), and filter housing (6) from fuel filter bracket (10).
4. Remove three capscrews (4), washers (5), and cover (3) from filter housing (6).
5. Remove O-ring (14) from filter housing (6). Discard O-ring (14).
6. Remove filter element (12) and separator (13) from filter housing (6).
7. Remove separator (13) from filter element (12). Discard filter element (12).

b. Cleaning and Inspection

WARNING

Drycleaning solvent is flammable and will not be used near an open flame. A fire extinguisher will be kept nearby when the solvent is used. Use only in well-ventilated places. Failure to do this may result in injury to personnel and/or damage to equipment.

1. Use drycleaning solvent to clean all metallic parts.
2. Inspect filter housing (6) and cover (3) for distortion or damage. Replace if damaged.
3. Inspect separator (13) for dirt, contamination, or damage. Replace if dirty, contaminated, or damaged.

3-34. FUEL FILTER ELEMENT MAINTENANCE (Cont'd)

c. Element Installation

1. Install filter element (12) into filter housing (6).
2. Install separator (13) on filter element (12).
3. Install O-ring (14) on filter housing (6).
4. Install cover (3) on filter housing (6) with three washers (5) and capscrews (4). Tighten capscrews (4) to 50-60 lb-in. (6-7 N·m).
5. Install filter housing (6) in fuel filter bracket (10) with capscrew (9) and nut (11).
6. Connect fuel filter drain hose (8) to filter housing (6) and tighten clamp (7) to 10-20 lb-in. (1-2 N·m).
7. Connect fuel inlet hose (1) and fuel outlet hose (15) to fuel filter cover (3) and tighten clamps (2) to 10-20 lb-in. (1-2 N·m).

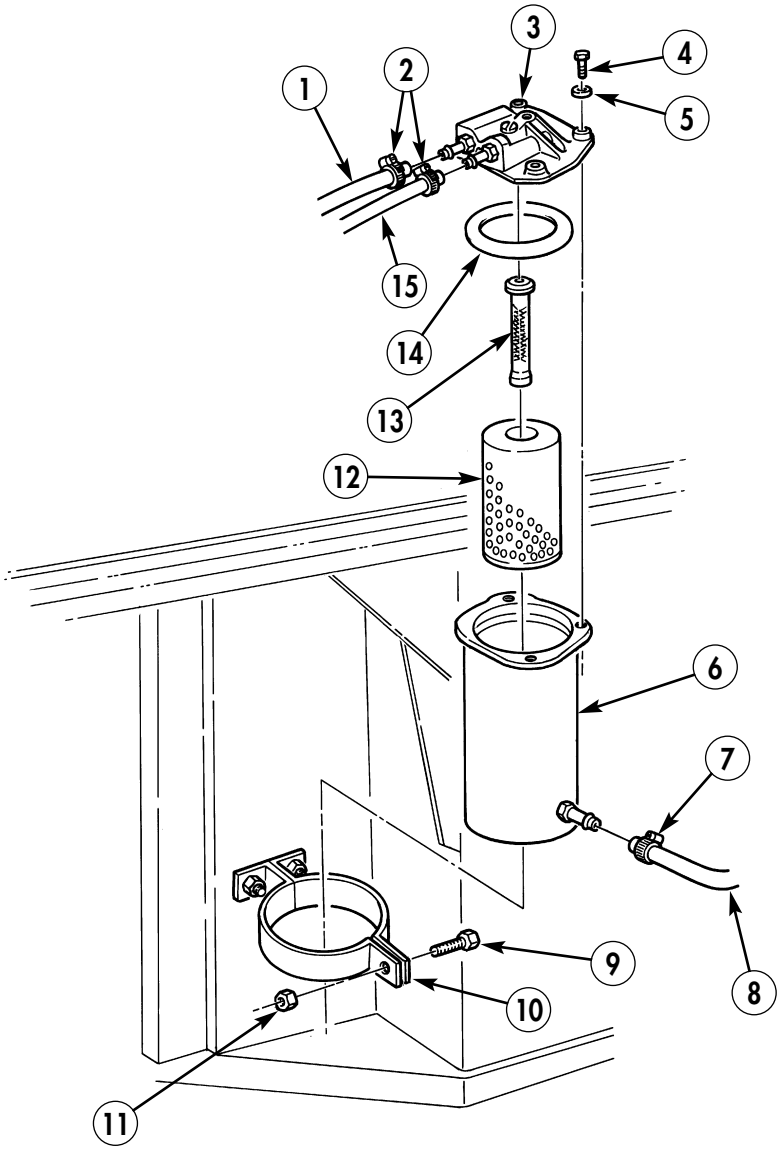

FOLLOW-ON TASK: Bleed fuel filter (para. 3-33).

3-35. FUEL FILTER DRAIN HOSE AND VALVE REPLACEMENT

This task covers:

a. Removal **b. Installation**

INITIAL SETUP:

Tools
General mechanic's tool kit: automotive (Appendix B, Item 1)

Materials/Parts
Nut and lockwasher assembly (Appendix G, Item 197)

Manual References
TM 9-2320-387-10
TM 9-2320-387-24P

Personnel Required
One mechanic
One assistant

Equipment Condition
Hood raised and secured (TM 9-2320-387-10).

General Safety Instructions
Do not perform this procedure near fire, flames, or sparks.

Maintenance Level
Unit

WARNING

Diesel fuel is highly flammable. Do not perform this procedure near fire, flames, or sparks. Severe injury or death may result.

a. Removal

CAUTION

Cover or plug all open hoses and connections immediately after disconnection to prevent contamination. Remove all plugs prior to connection.

NOTE

- For fuel filter drainvalve replacement, perform steps 1 and 2 only.
- Have drainage container ready to catch fuel.

1. Loosen clamp (7) and disconnect drain hose (10) from fuel filter drainvalve (6).
2. Remove nut (13) and fuel filter drainvalve (6) from bracket (14) (M1113 only) or splash shield (12) (M1114 only).
3. Loosen clamp (2) and disconnect fuel filter drain hose (10) from fuel filter assembly (1).
4. Remove nut and lockwasher assembly (5), capscrew (11), clamp (4), and drain hose (10) from cowl panel (3). Discard nut and lockwasher assembly (5).
5. Remove capscrew (9), drain hose (10), and clamp (8) from panel (3).

b. Installation

NOTE

For fuel filter drainvalve replacement, perform steps 4 and 5 only.

1. Install drain hose (10) on cowl panel (3) with clamp (8) and capscrew (9).
2. Install drain hose (10) on cowl panel (3) with clamp (4), capscrew (11), and nut and lockwasher assembly (5).
3. Connect drain hose (10) to fuel filter assembly (1) and tighten clamp (2).
4. Install fuel filter drainvalve (6) on bracket (14) (M1113 only) or splash shield (12) (M1114 only).
5. Connect drain hose (10) to fuel filter drainvalve (6) and tighten clamp (7).

3-35. FUEL FILTER DRAIN HOSE AND VALVE REPLACEMENT (Cont'd)

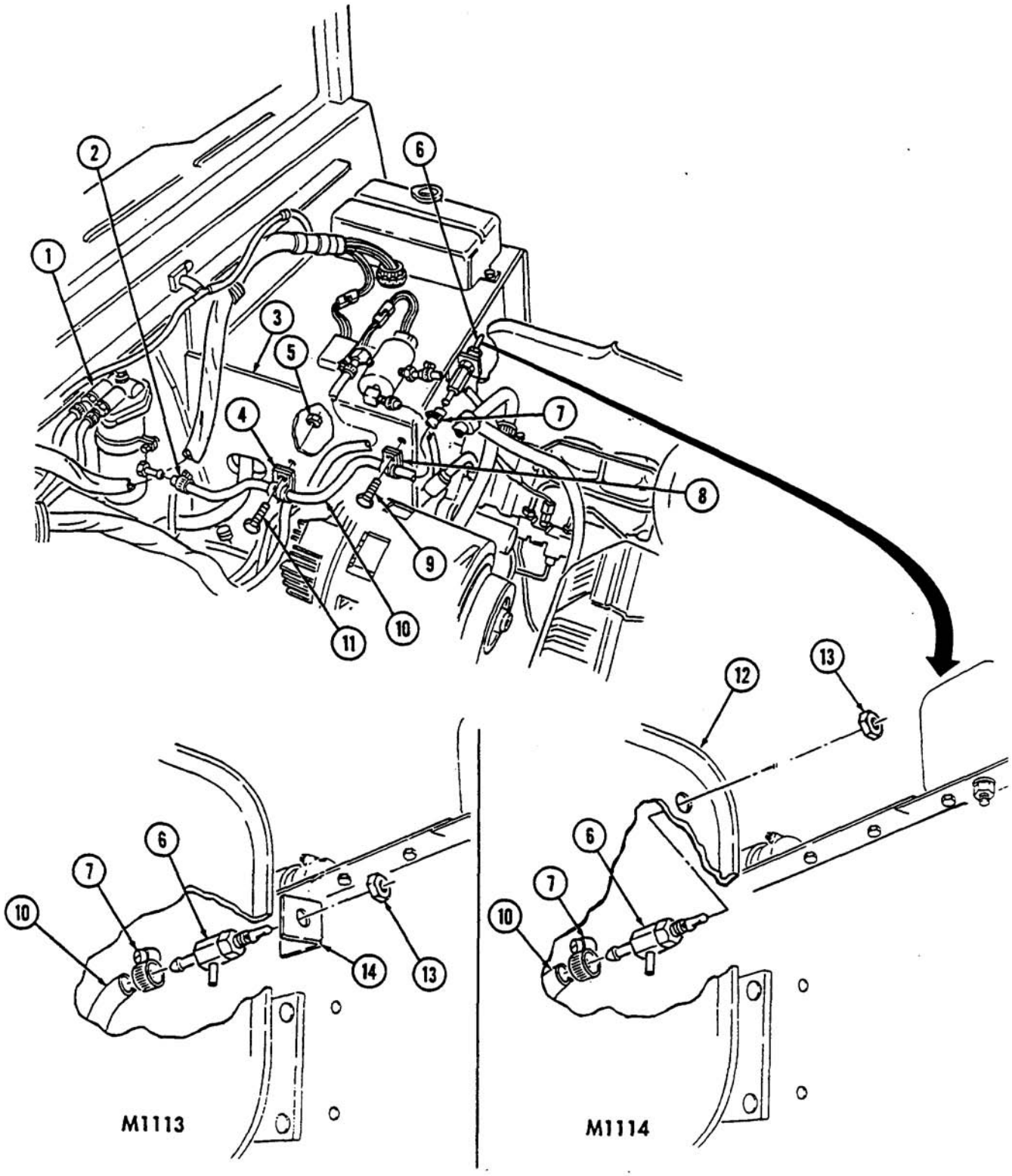

FOLLOW-ON TASKS: • Start engine (TM 9-2320-387-10) and check for leaks.
• Lower and secure hood (TM 9-2320-387-10).

3-36. FUEL INJECTION PUMP RETURN HOSE CHECK VALVE MAINTENANCE

This task covers:

a. Removal
b. Cleaning and Inspection
c. Installation

INITIAL SETUP:

Tools
General mechanic's tool kit: automotive (Appendix B, Item 1)

Manual References
TM 9-2320-387-24P

Material/Parts
O-ring (Appendix G, Item 210)

Equipment Condition
Air horn removed (para. 3-14)

General Safety Instructions
- Do not perform this procedure near fire, flames, or sparks.
- Compressed air used for cleaning purposes will not exceed 30 psi (207 kPa).

Maintenance Level
Unit

WARNING

Diesel fuel is highly flammable. Do not perform this procedure near fire, flames, or sparks. Severe injury or death may result.

a. Removal

CAUTION

Cover or plug all hoses and connections immediately after disconnection to prevent contamination. Remove all plugs prior to connection.

1. Remove clamp (2) and hose (1) from injection pump check valve (3).
2. Remove check valve (3) and O-ring (4) from injection pump (5). Discard O-ring (4).

b. Cleaning and Inspection

WARNING

Compressed air used for cleaning purposes will not exceed 30 psi (207 kPa). Use only with effective chip guarding and personal protective equipment (goggles/shield, gloves, etc.).

Examine lower end of check valve (3), where ball seats, for evidence of debris. If debris is present, blow compressed air through check valve. Replace check valve (3) if debris remains, or if check valve (3) fails to function properly.

c. Installation

1. Install O-ring (4) and check valve (3) on injection pump (5).
2. Connect hose (1) to check valve (3) with clamp (2).

3-36. FUEL INJECTION PUMP RETURN HOSE CHECK VALVE MAINTENANCE (Cont'd)

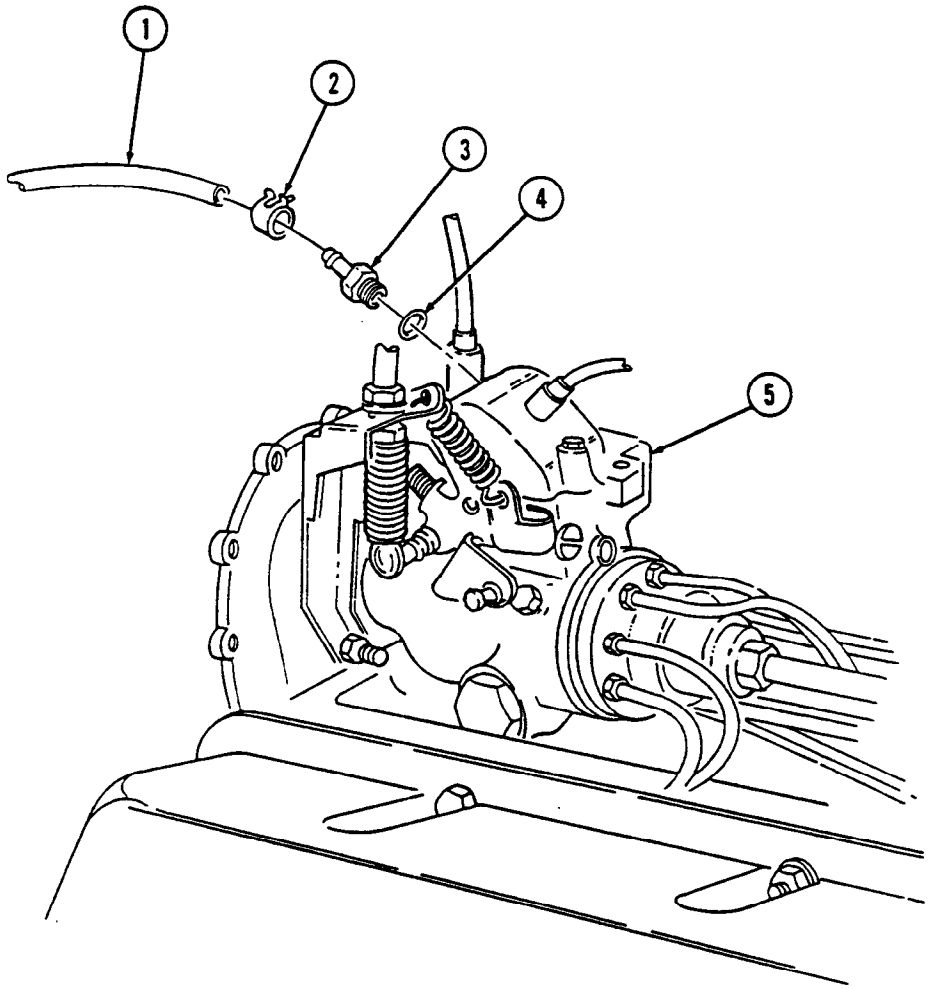

FOLLOW-ON TASK: Install air horn (para. 3-14).

3-37. FUEL INJECTION RETURN HOSES REPLACEMENT

This task covers:

a. Fuel Drain-Back Hose Removal
b. Fuel Drain-Back Hose Installation
c. Tube-to-Nozzle Hose Removal
d. Tube-to-Nozzle Hose Installation
e. Nozzle-to-Nozzle Hose Removal
f. Nozzle-to-Nozzle Hose Installation
g. Nozzle Cap Removal
h. Nozzle Cap Installation

INITIAL SETUP:

Tools
General mechanic's tool kit: automotive (Appendix B, Item 1)

Manual References
TM 9-2320-387-10
TM 9-2320-387-24P

Equipment Condition
- Engine access cover removed (para. 10-22).
- Air horn removed (para. 3-14).

General Safety Instructions
Do not perform this procedure near fire, flames, or sparks.

Maintenance Level
Unit

WARNING

Diesel fuel is highly flammable. Do not perform this procedure near fire, flames, or sparks. Severe injury or death may result.

CAUTION

Cover or plug all hoses and connections immediately after disconnection to prevent contamination. Remove all plugs prior to connection.

NOTE

Have drainage container ready to catch fuel.

a. Fuel Drain-Back Hose Removal

1. Loosen two clamps (2) and remove hose (3) from injection pump (4) and fuel drain-back tube (1).
2. Remove two clamps (2) from hose (3).

b. Fuel Drain-Back Hose Installation

1. Install two clamps (2) on hose (3).
2. Connect hose (3) to injection pump (4) and fuel drain-back tube (1) with two clamps (2).

c. Tube-to-Nozzle Hose Removal

1. Loosen two clamps (5) and remove hose (6) from nozzle (7) and fuel drain-back tube (1).
2. Remove two clamps (5) from hose (6).

d. Tube-to-Nozzle Hose Installation

1. Install two clamps (5) on hose (6).
2. Connect hose (6) to nozzle (7) and fuel drain-back tube (1) with two clamps (5).

3-37. FUEL INJECTION RETURN HOSES REPLACEMENT (Cont'd)

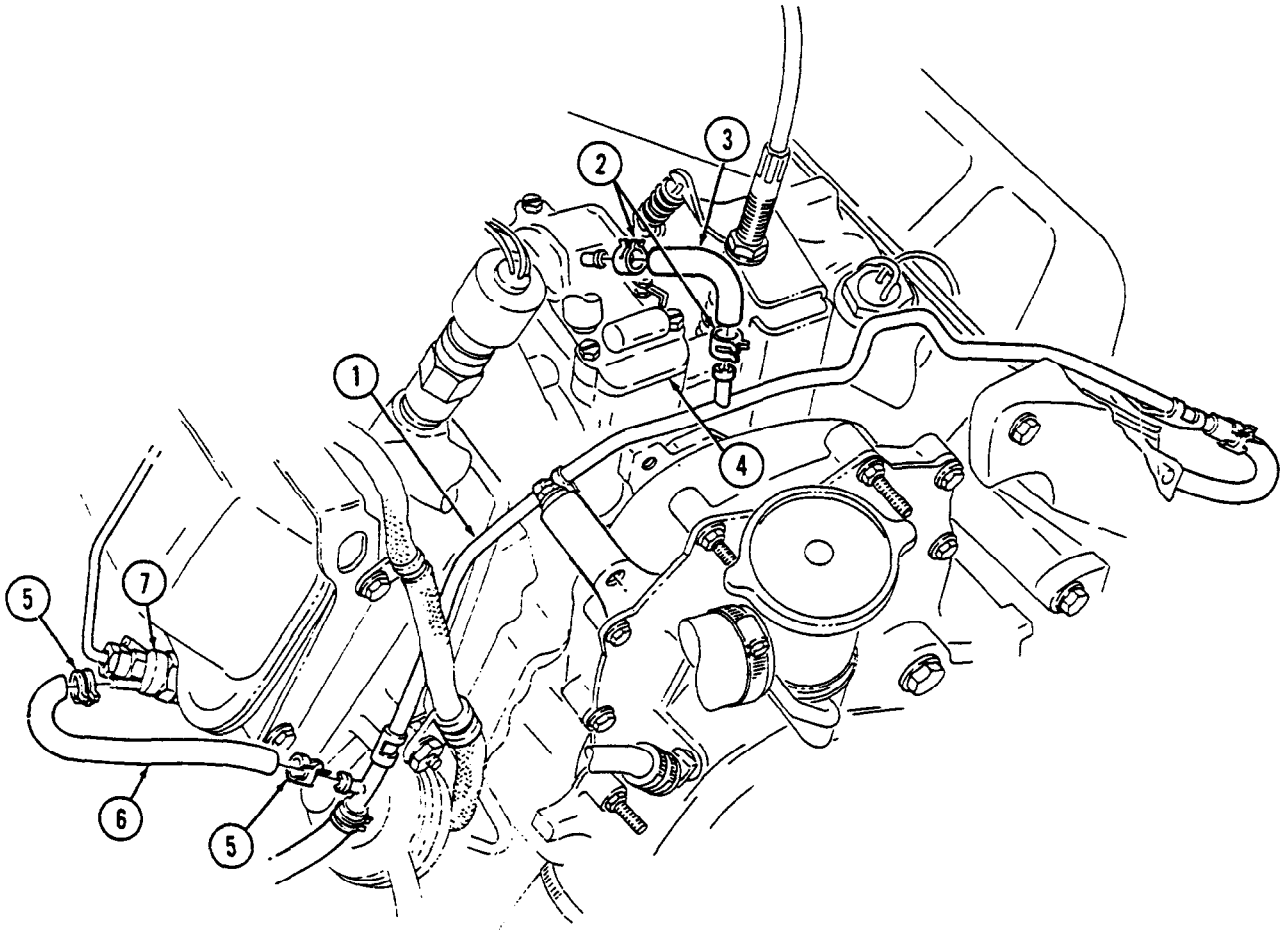

3-37. FUEL INJECTION RETURN HOSES REPLACEMENT (Cont'd)

e. Nozzle-to-Nozzle Hose Removal

1. Loosen two clamps (5) and disconnect hose (6) from two nozzles (4).
2. Remove two clamps (5) from hose (6).

f. Nozzle-to-Nozzle Hose Installation

1. Install two clamps (5) on hose (6).
2. Connect hose (6) to two nozzles (4) with two clamps (5).

g. Nozzle Cap Removal

Remove clamp (2) and cap (1) from rear nozzle nipple (3).

h. Nozzle Cap Installation

Install cap (1) on rear nozzle nipple (3) with clamp (2).

3-37. FUEL INJECTION RETURN HOSES REPLACEMENT (Cont'd)

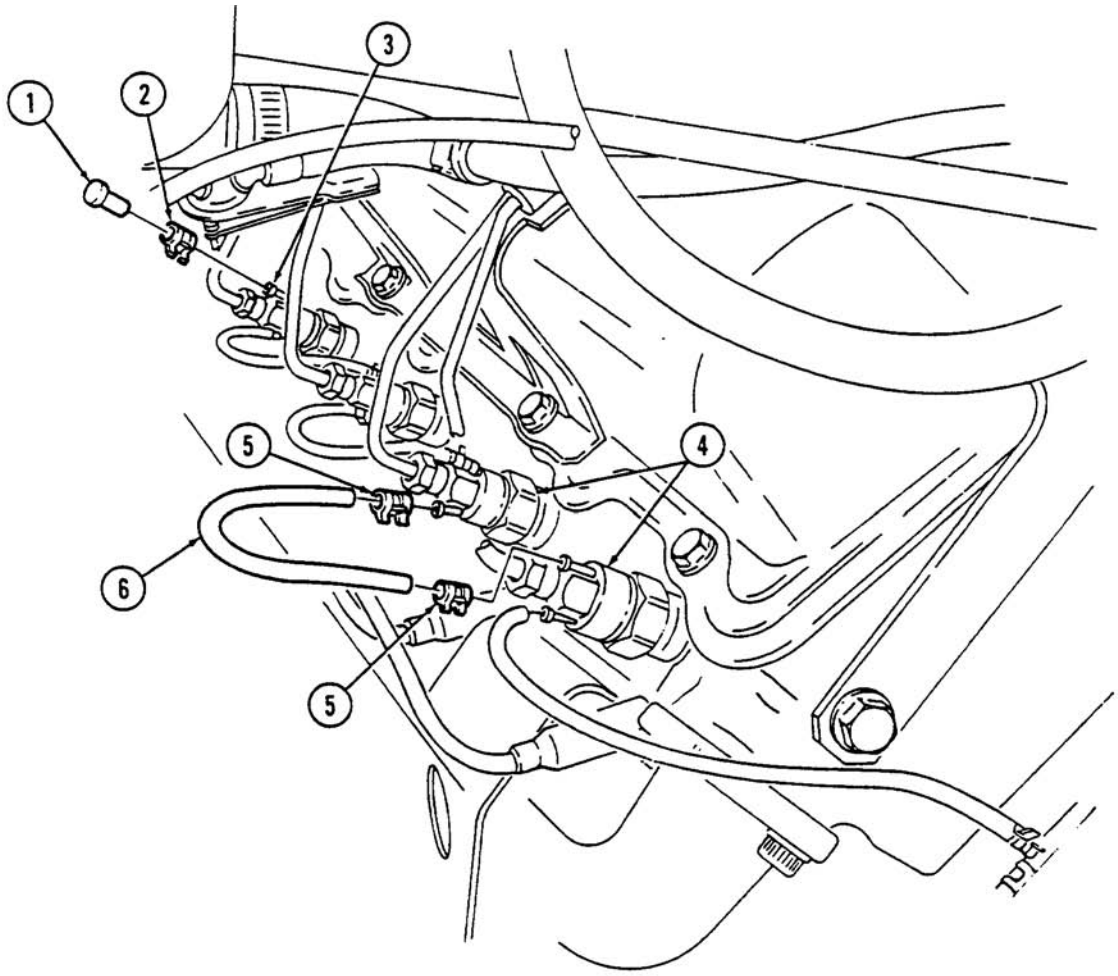

FOLLOW-ON TASKS:
- Install air horn (para. 3-14).
- Install engine access cover (para. 10-22).
- Start engine (TM 9-2320-387-10) and check for fuel leaks.

3-38. FUEL DRAIN-BACK TUBE REPLACEMENT

This task covers:

a. Removal **b. Installation**

INITIAL SETUP:

Tools

General mechanic's tool kit: automotive (Appendix B, Item 1)
Maintenance repair shop equipment: automotive (Appendix B, Item 2)

Manual References

TM 9-2320-387-10
TM 9-2320-387-24P

Equipment Condition

Air horn removed (para. 3-14).

General Safety Instructions

Do not perform this procedure near fire, flames, or sparks.

Maintenance Level

Unit

WARNING

Diesel fuel is highly flammable. Do not perform this procedure near fire, flames, or sparks. Severe injury or death may result.

a. Removal

CAUTION

Cover or plug all hoses and connections immediately after disconnection to prevent contamination. Remove all plugs prior to reconnection.

1. Remove nut (17), washer (18), and engine wiring harness clamp (15) from stud (19).
2. Remove stud (19), fuel drain-back tube (5), clamp (20), fuel supply line (14), and clamp (16) from cylinder head (23).
3. Loosen two clamps (10) and disconnect two hoses (11) from fuel drain-back tube (5).
4. Loosen clamp (22) and disconnect fuel return hose (21) from fuel drain-back tube (5).
5. Loosen clamp (4) and disconnect fuel drain-back hose (3) from fuel drain-back tube (5).
6. Remove nut (7), washer (8), clamp (9), and fuel-drain-back tube (5) from valve cover stud (6).
7. Remove capscrew (1), washer (24), and clamp (12) from front engine cover (13).
8. Remove drain-back tube (5).

b. Installation

1. Position fuel drain-back tube (5) in front of injection pump (2).
2. Connect fuel return hose (21) to fuel drain-back tube (5) with clamp (22).
3. Connect two hoses (11) to fuel drain-back tube (5) with two clamps (10).
4. Connect fuel drain-back hose (3) to fuel drain-back tube (5) with clamp (4).
5. Install fuel drain-back tube (5) on valve cover stud (6) with clamp (9), washer (8), and nut (7). Tighten nut (7) to 13-20 lb-ft (18-27 N·m).
6. Install fuel drain-back tube (5) on front engine cover (13) with clamp (12), washer (24), and capscrew (1). Tighten capscrew (1) to 40 lb-ft (54 N·m).
7. Install fuel supply line (14), clamp (16), fuel drain-back tube (5), and clamp (20) on cylinder head (23) with stud (19).
8. Install wiring harness clamp (15) on stud (19) with washer (18) and nut (17).

3-38. FUEL DRAIN-BACK TUBE REPLACEMENT (Cont'd)

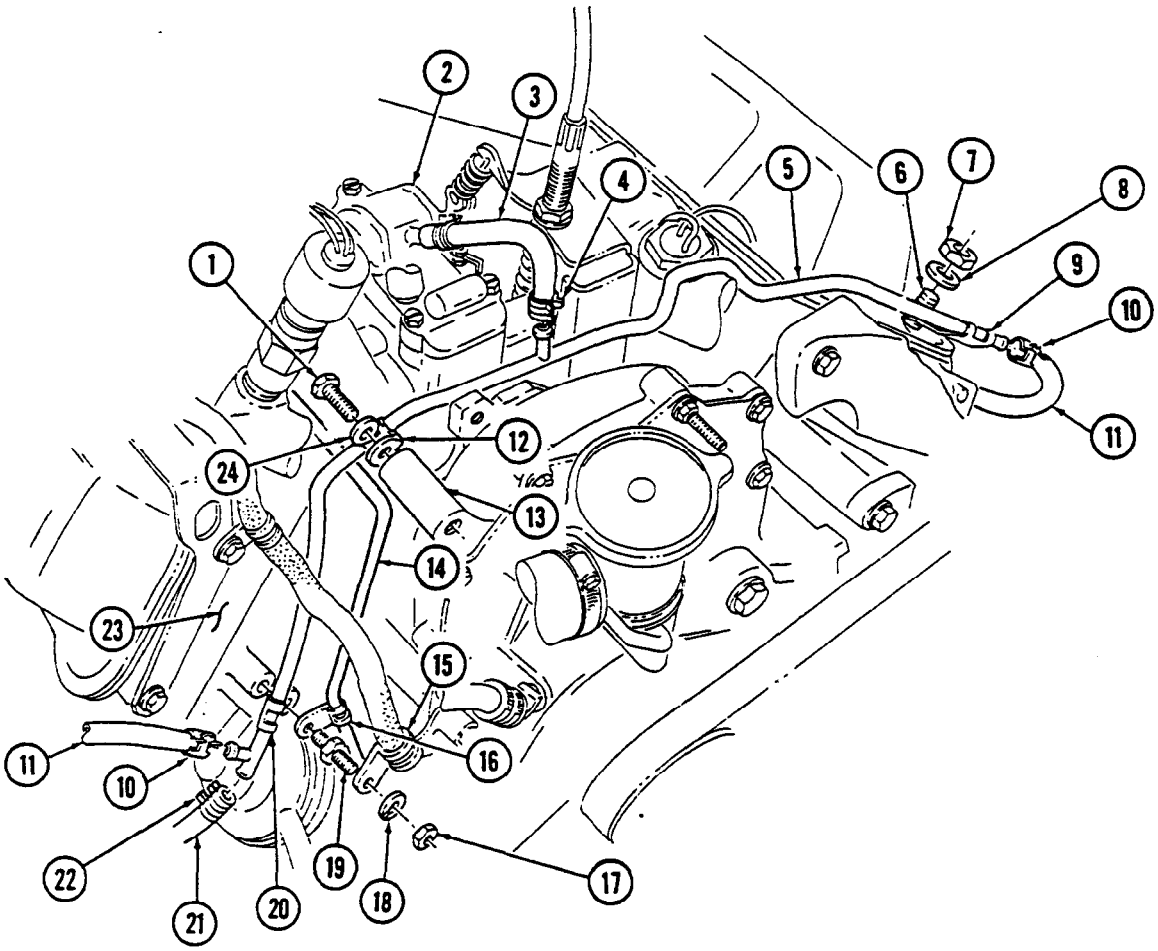

FOLLOW-ON TASKS: • Install air horn (para. 3-14).
• Start engine (TM 9-2320-387-10) and check for fuel leaks.

3-39. GLOW PLUG REPLACEMENT

This task covers:

a. Removal

b. Installation

INITIAL SETUP:

Tools
General mechanic's tool kit:
automotive (Appendix B, Item 1)
Maintenance and repair shop equipment:
automotive (Appendix B, Item 2)

Special Tools
Socket, 3/8 in. (Appendix B, Item 144)

Manual References
TM 9-2320-387-10
TM 9-2320-387-24P

Equipment Condition
- Battery ground cables disconnected (para. 4-68).
- Hood raised and secured (TM 9-2320-387-10).

Maintenance Level
Unit

a. Removal

1. Disconnect electrical lead 575 (3) from glow plug (2).

NOTE

If glow plug is damaged or broken, notify unit commander. Damaged or broken glow plugs are removed at DS maintenance (para. 15-22).

2. Remove glow plug (2) from cylinder head (1).

b. Installation

NOTE

HMMWV glow plugs have bullet-shaped tips, not flat tips.

1. Install glow plug (2) in cylinder head (1). Tighten glow plug (2) to 8-12 lb-ft (11-16 N•m).
2. Connect electrical lead 575 (3) to glow plug (2).

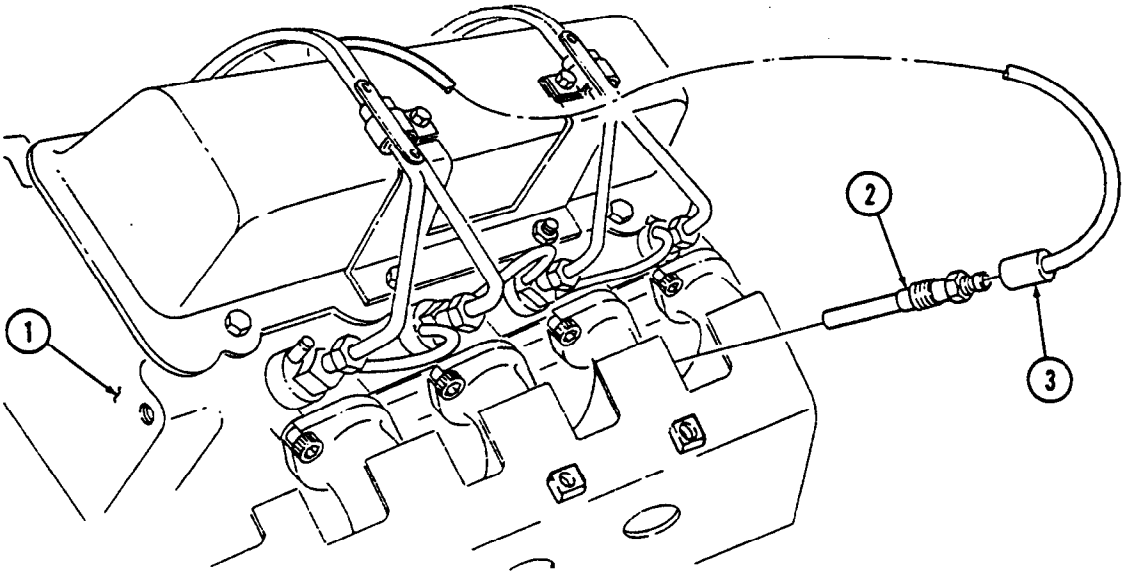

FOLLOW-ON TASKS:
- Connect battery ground cables (para. 4-68).
- Lower and secure hood (TM 9-2320-387-10).

3-40. RIGHT FUEL INJECTION LINES BRACKET REPLACEMENT

This task covers:

a. Removal **b. Installation**

INITIAL SETUP:

Tools

General mechanic's tool kit:
automotive (Appendix B, Item 1)
Maintenance and repair shop equipment:
automotive (Appendix B, Item 2)

Manual References

TM 9-2320-387-24P

Equipment Condition

- Engine access cover removed (para. 10-22).
- Air horn removed (para. 3-14).

Maintenance Level

Unit

a. Removal

1. Remove two screw-assembled washers (6), clamps (5), and clamp (7) from bracket (1).
2. Inspect two clamps (5) for cracks or breaks. Replace if defective.
3. Remove two nuts (3), washers (2), and bracket (1) from valve cover studs (4).

b. Installation

1. Install bracket (1) on two valve cover studs (4) with washers (2) and nuts (3). Tighten nuts (3) to 13-20 lb-ft (18-27 N·m).
2. Install two clamps (5) and clamp (7) on bracket (1) with two screw-assembled washers (6). Tighten screw-assembled washers (6) to 3-4 lb-ft (4-5 N·m).

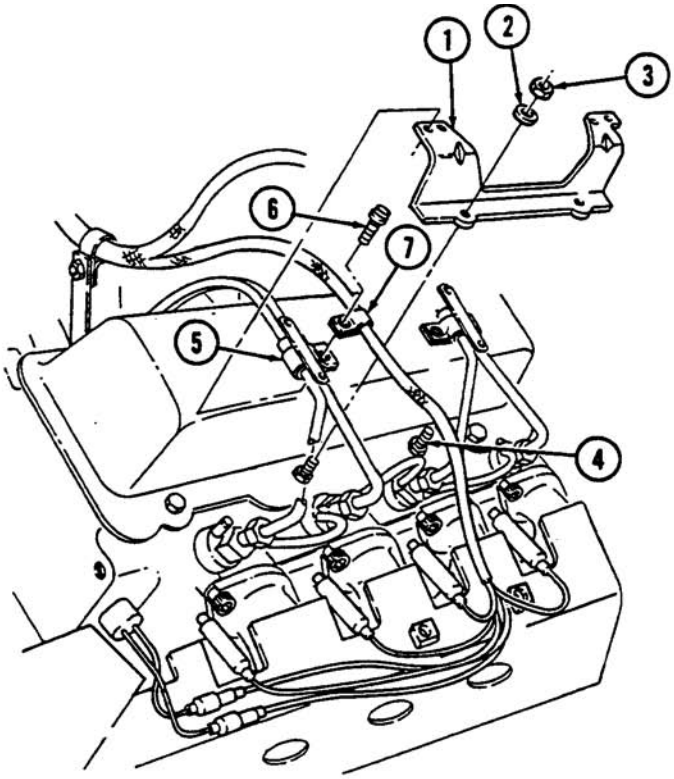

FOLLOW-ON TASKS:
- Install air horn (para. 3-14).
- Install engine access cover (para. 10-22).

3-41. LEFT FUEL INJECTION LINES BRACKET REPLACEMENT

This task covers:

a. Removal **b. Installation**

INITIAL SETUP:

Tools

General mechanic's tool kit:
automotive (Appendix B, Item 1)
Maintenance and repair shop equipment:
automotive (Appendix B, Item 2)

Manual References

TM 9-2320-387-10
TM 9-2320-387-24P

Equipment Condition

- Hood raised and secured (TM 9-2320-387-10).
- Engine access cover removed (para. 10-22).

Maintenance Level

Unit

a. Removal

1. Remove screw-assembled washer (2) and clamp (1) from bracket (5).
2. Remove screw-assembled washer (8) and clamp (9) from bracket (5).
3. Remove two screw-assembled washers (3) and oil dipstick tube (4) from bracket (5).
4. Remove two nuts (6), washers (7), and bracket (5) from valve cover studs (10).

b. Installation

1. Install bracket (5) on two valve cover studs (10) with washers (7) and nuts (6). Tighten nuts (6) to 13-20 lb-ft (18-27 N·m).
2. Secure oil dipstick tube (4) to bracket (5) with two screw-assembled washers (3). Tighten screw-assembled washers (3) to 3-4 lb-ft (4-5 N·m).
3. Install clamp (9) on bracket (5) with screw-assembled washer (8). Tighten screw-assembled washer (8) to 3-4 lb-ft (4-5 N·m).
4. Install clamp (1) on bracket (5) with screw-assembled washer (2). Tighten screw-assembled washer (2) to 3-4 lb-ft (4-5 N·m).

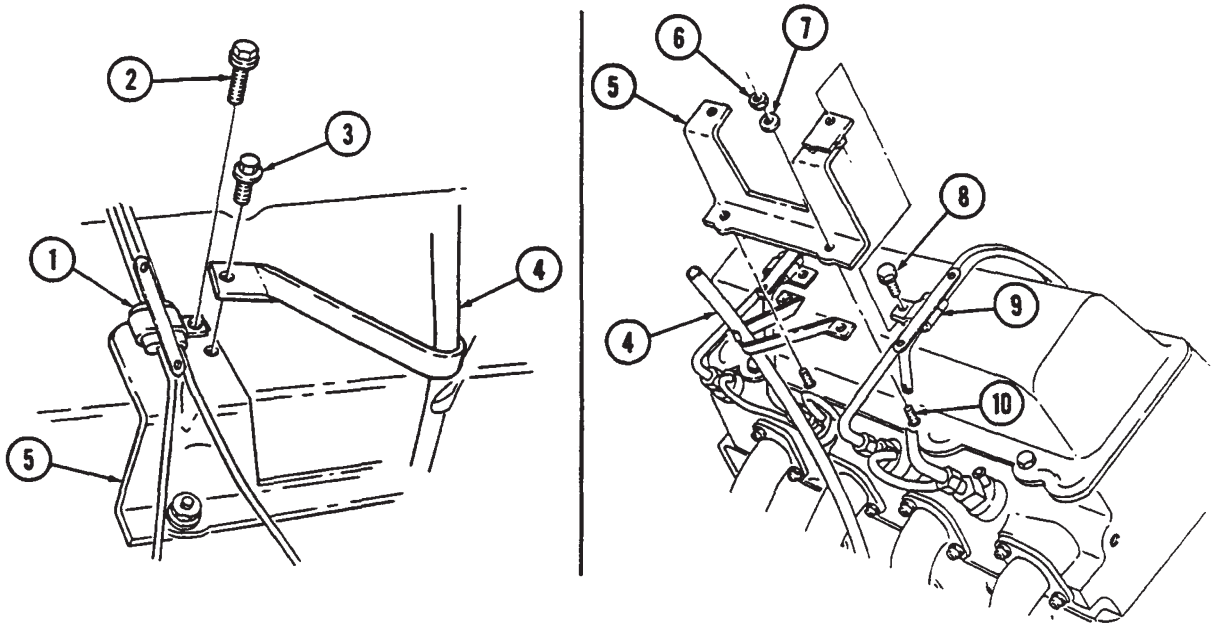

FOLLOW-ON TASKS:
- Install engine access cover (para. 10-22).
- Lower and secure hood (TM 9-2320-387-10).

Section III. ACCELERATOR SYSTEM MAINTENANCE

3-42. ACCELERATOR SYSTEM MAINTENANCE TASK SUMMARY

TASK PARA.	PROCEDURES	PAGE NO.
3-43.	Accelerator Linkage Maintenance	3-82
3-44.	Accelerator Pedal Replacement	3-86
3-45.	Engine Idle Speed Adjustment	3-87
3-46.	Hand Throttle Control Cable and Bracket Replacement	3-88

3-43. ACCELERATOR LINKAGE MAINTENANCE

This task covers:

a. Removal **b. Installation**

c. Inspection **d. Adjustment**

INITIAL SETUP:

Tools

General mechanic's tool kit:
automotive (Appendix B, Item 1)
Maintenance and repair shop equipment:
automotive (Appendix B, Item 2)

Materials/Parts

Four locknuts (Appendix G, Item 77)
Cotter pin (Appendix G, Item 26)
Assembled locknut (Appendix G, Item 134)
Lubricating oil, seasonal grade OE
(Appendix C, Item 45)

Personnel Required

One mechanic
One assistant

Manual References

TM 9-2320-387-10
TM 9-2320-387-24P

Equipment Condition

- Hood raised and secured (TM 9-2320-387-10)
- Engine access cover removed (para. 10-22)

Maintenance Level

Unit

a. Removal

1. Remove cotter pin (18) and washer (17) and disconnect accelerator cable clevis (16) from accelerator pedal rod (14). Discard cotter pin (18).
2. Remove hitch pin (1) and washer (2) and disconnect hand throttle clevis (3) from accelerator pedal rod (14).
3. Remove assembled locknut (19) and harness clamp (21) from lower capscrew (25). Discard assembled locknut (19).
4. Remove three locknuts (22), washers (23), capscrews (25), washers (24.1), and two accelerator rod retainers (24) from cowl (20). Discard locknuts (22).

NOTE

Bushing halves may detach from accelerator pedal rod during removal.

5. Pull accelerator pedal rod (14) forward through gasket (5) in cowl (20) and remove accelerator rod (14).
6. Remove accelerator rod retainers (24) and bushing halves (4) from accelerator pedal rod (14).
7. Remove gasket (5) from cowl (20).
8. Remove locknut (11), washer (12), capscrew (15), and accelerator cable clevis (16) from body bracket (13). Discard locknut (11).
9. Remove nut (10), capscrew (7), and clamps (6) and (9) from A-beam (8). Remove clamp (9) from accelerator cable (28).
10. Loosen two nuts (27) and disconnect accelerator cable (28) from engine bracket (31).
11. Disconnect throttle return spring (29) from engine bracket (31).
12. Remove accelerator cable clip (26), accelerator cable (28), and accelerator cable end (32) from injection pump throttle shaft (30).

3-43. ACCELERATOR LINKAGE MAINTENANCE (Cont'd)

b. Inspection

Inspect throttle spring (4) for damage. Replace if defective.

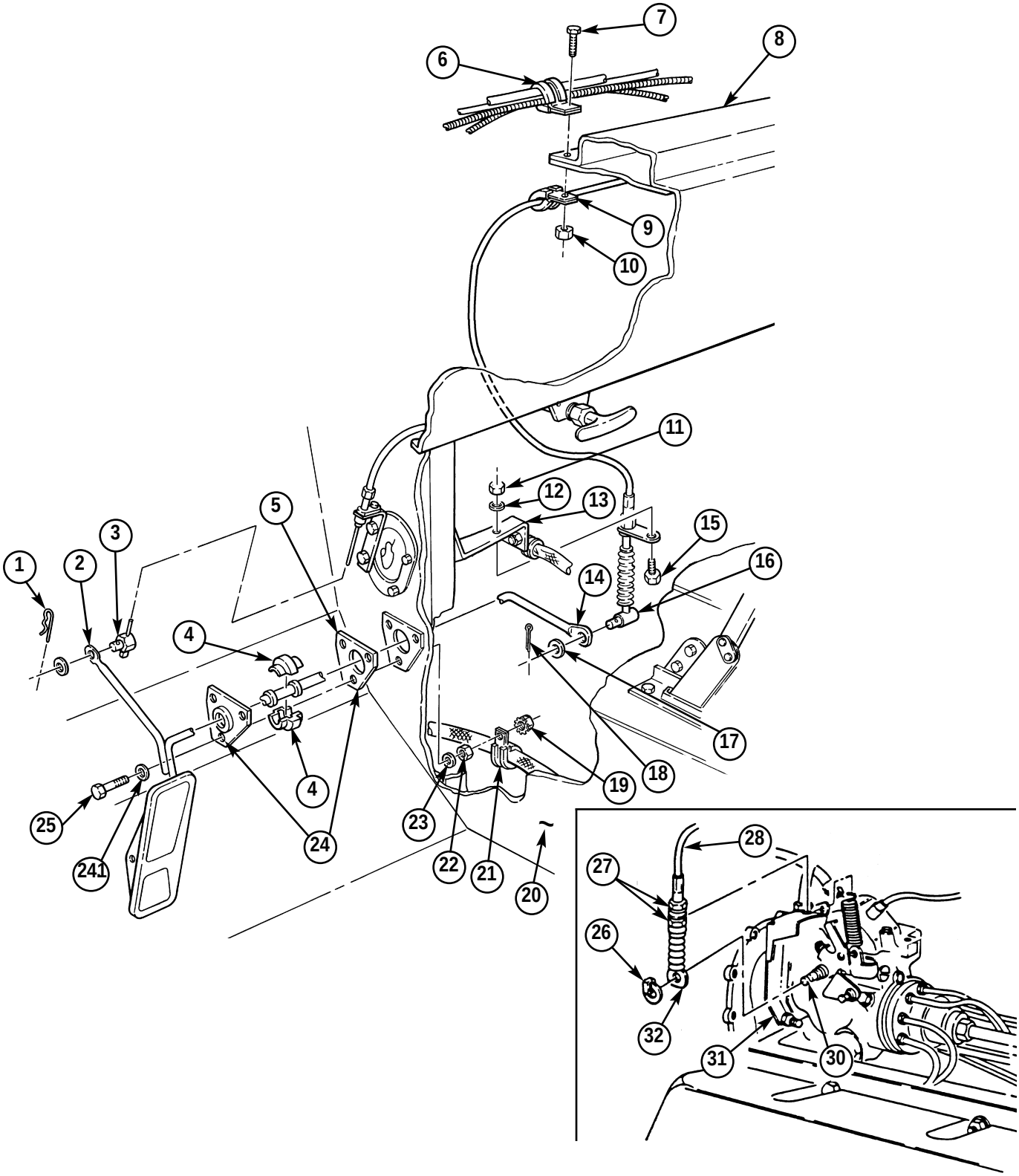

3-43. ACCELERATOR LINKAGE MAINTENANCE (Cont'd)

c. Installation

1. Connect accelerator cable (3) to injection pump throttle shaft (6).
2. Position throttle shaft lever (5) to full throttle position and secure accelerator cable (3) to injection pump throttle shaft (6) with accelerator cable clip (1).
3. Connect throttle return spring (4) to engine bracket (7).
4. Install cable assembly (3) on engine bracket (7) and tighten two nuts (2).
5. Install clamp (17) on cable assembly (3) and install clamps (14) and (17) to A-beam (16) with capscrew (15) and nut (18).
6. Install accelerator cable clevis (24) on body bracket (21) with capscrew (23), washer (20), and locknut (19).
7. Position gasket (13) to cowl (28).
8. Apply lubricating oil on accelerator bushing halves (12) and accelerator pedal rod (22) at accelerator rod retainer (32).
9. Position accelerator rod retainers (32) and bushing halves (12) onto accelerator pedal rod (22), ensuring retainers (32) are properly seated over bushing halves (12).
10. Install accelerator rod retainers (32), accelerator pedal rod (22), and gasket (13) on cowl (28) with three washers (32.1), capscrews (33), washers (31), and locknuts (30). Install clamp (29) on lower capscrew (33) with assembled locknut (27).
11. Connect hand throttle clevis (11) to accelerator pedal rod (22) with washer (10) and hitch pin (9).
12. Connect accelerator cable clevis (24) to accelerator pedal rod (22) with washer (25) and cotter pin (26).

d. Adjustment

1. Loosen two accelerator cable nuts (2) on engine bracket (7).
2. Fully depress accelerator pedal.
3. Hold throttle shaft lever (5) in full throttle position.
4. Adjust accelerator cable nuts (2) up or down so accelerator cable end (8) holds throttle shaft lever (5) in full throttle position.
5. Tighten two nuts (2) securing accelerator cable (3) to engine bracket (7).
6. Release accelerator pedal and ensure throttle shaft lever (5) returns all the way to idle position.

3-43. ACCELERATOR LINKAGE MAINTENANCE (Cont'd)

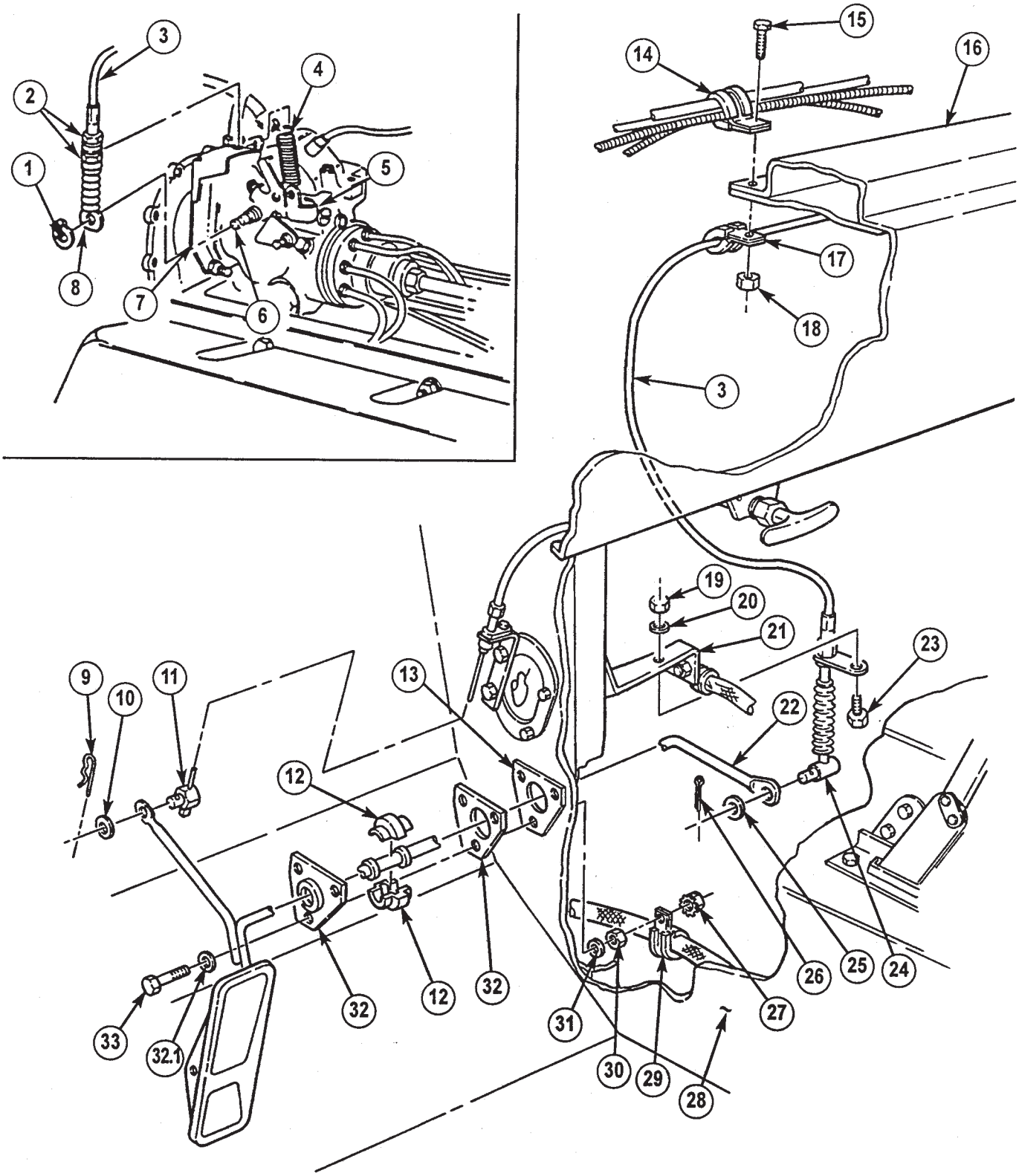

FOLLOW-ON TASKS:
- Install engine access cover (para. 10-22).
- Lower and secure hood (TM 9-2320-387-10).
- Start engine (TM 9-2320-387-10) and check for proper accelerator operation.

3-44. ACCELERATOR PEDAL REPLACEMENT

This task covers:

a. Removal **b. Installation**

INITIAL SETUP:

Tools
General mechanic's tool kit: automotive (Appendix B, Item 1)

Manual References
TM 9-2320-387-10
TM 9-2320-387-24P

Materials/Parts
Cotter pin (Appendix G, Item 26)

Maintenance Level
Unit

a. Removal

Remove cotter pin (3), washer (4), spring (2), pin (6), and accelerator pedal (5) from accelerator rod (1). Discard cotter pin (3).

b. Installation

Install accelerator pedal (5) and spring (2) on accelerator rod (1) with pin (6), washer (4), and cotter pin (3).

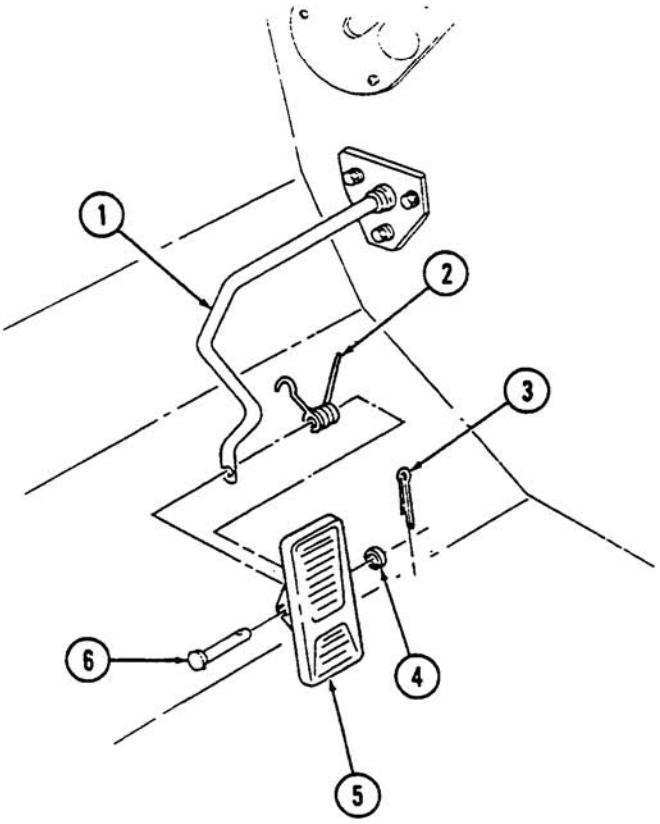

FOLLOW-ON TASK: Start engine (TM 9-2320-387-10) and check for proper accelerator operation.

3-45. ENGINE IDLE SPEED ADJUSTMENT

This task covers:

Engine Idle Speed Adjustment

INITIAL SETUP:

Tools
General mechanic's tool kit: automotive (Appendix B, Item 1)

Test Equipment
STE/ICE-R

Manual References
TM 9-2320-387-10
TM 9-2320-387-24P

Equipment Condition
Hood raised and secured (TM 9-2320-387-10).

General Safety Instructions
Keep hands and arms away from fan blade and drivebelts while engine is running.

Maintenance Level
Unit

Engine Idle Speed Adjustment

WARNING

Keep hands and arms away from fan blade and drivebelts while engine is running or serious injury may result.

1. Start engine (TM 9-2320-387-10) and bring engine to operating temperature.
2. Note idle speed and disconnect lead 569B (2) from injection pump (4). If change in idle speed is noted, refer to para. 2-28, Fuel System Tests. If no change in idle speed is noted, connect lead 569B (2) to injection pump (4).
3. Set engine idle speed to 700 rpm (± 25 rpm) by turning idle speed adjusting screw (1) on throttle shaft lever (3).

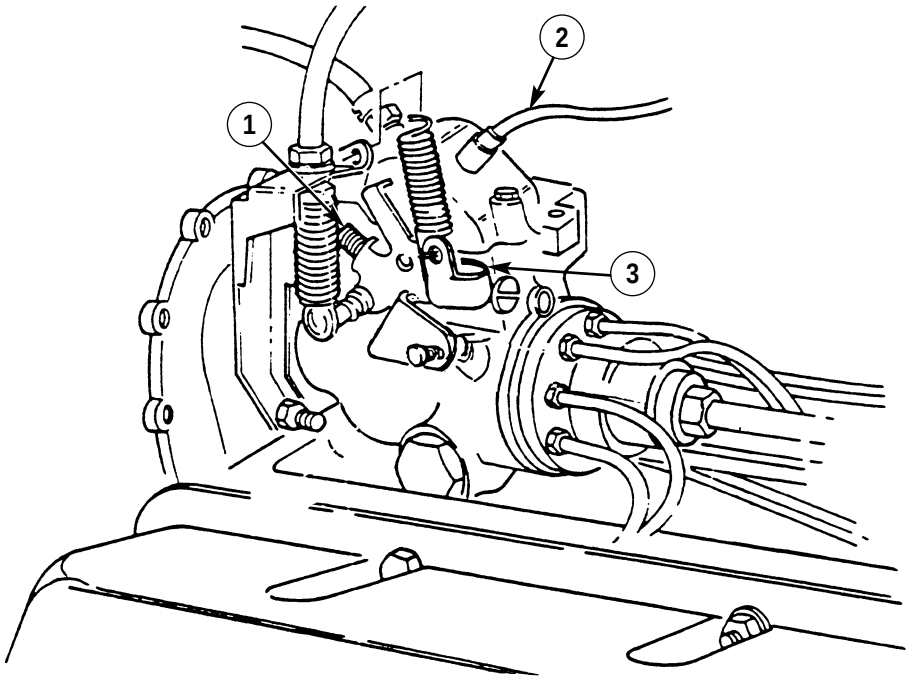

FOLLOW-ON TASK: Lower and secure hood (TM 9-2320-387-10).

3-46. HAND THROTTLE CONTROL CABLE AND BRACKET REPLACEMENT

This task covers:

a. Removal **b. Installation**

INITIAL SETUP:

Tools
General mechanic's tool kit:
automotive (Appendix B, Item 1)
Maintenance and repair shop equipment:
automotive (Appendix B, Item 2)

Materials/Parts
Four locknuts (Appendix G, Item 77)
O-ring (Appendix G, Item 212)

Personnel Required
One mechanic
One assistant

Manual References
TM 9-2320-387-24P

Maintenance Level
Unit

a. Removal

1. Remove four screws (7), washers (6), and instrument cluster (8) from instrument panel (3) and pull instrument cluster (8) away to allow access to speedometer cable (4).
2. Loosen nut (5) and disconnect speedometer cable (4) from speedometer (1).
3. Remove hitch pin (19) and washer (18) and disconnect hand throttle clevis (16) from accelerator rod (17).
4. Remove locknut (21), washer (9), screw (10), washer (9), and hand throttle cable (11) from bracket (12). Discard locknut (21).
5. Remove two locknuts (13), washers (14), capscrews (20), washers (14), spacers (12.1), and bracket (12) from boot (14.1) and cowl (15). Discard locknuts (13).
6. Loosen nut (25) and remove hand throttle cable (11) from bracket (23).
7. Remove locknut (29), washer (27), capscrew (26), and washer (27) from bracket (23) and instrument panel (3). Discard locknut (29).
8. Remove nut (22), screw (24), and bracket (23) from instrument panel (3).
9. Remove setscrew (30) and handle (31) from hand throttle cable (11).
10. Remove nut (25) and O-ring (32) from hand throttle cable (11). Discard O-ring (32).

b. Installation

1. Install O-ring (32) and nut (25) on hand throttle cable (11).
2. Install handle (31) on hand throttle cable (11) with setscrew (30).
3. Install bracket (23) on instrument panel (3) with screw (24) and nut (22). Do not tighten nut (22).
4. Align holes in bracket (23), instrument panel (3), and steering column bracket (28) and install washer (27), capscrew (26), washer (27), and locknut (29).
5. Tighten screw (24) and nut (22).
6. Install hand throttle cable (11) on bracket (23) and tighten nut (25).
7. Install bracket (12) and two spacers (12.1) on cowl (15) and boot (14.1) with two washers (14), capscrews (20), washers (14), and locknuts (13).
8. Install hand throttle cable (11) on bracket (12) with washer (9), screw (10), washer (9), and locknut (21).
9. Connect clevis (16) to accelerator rod (17) with washer (18) and hitch pin (19).
10. Connect speedometer cable (4) to speedometer (1), ensuring core (2) engages with square hole in speedometer (1), and tighten nut (5).
11. Install instrument cluster (8) in instrument panel (3) with four washers (6) and screws (7).

3-46. HAND THROTTLE CONTROL CABLE AND BRACKET REPLACEMENT (Cont'd)

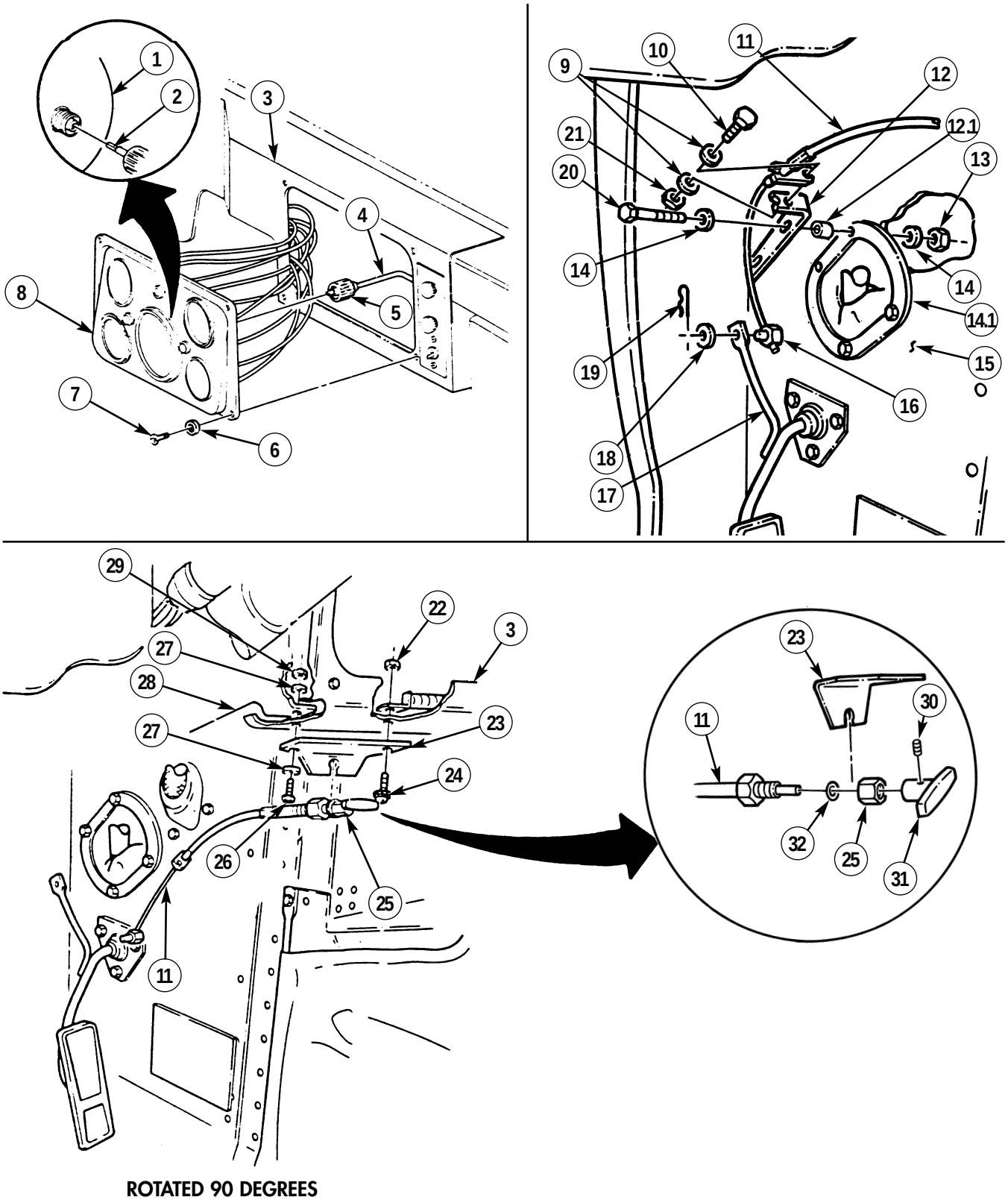

Section IV. EXHAUST SYSTEM MAINTENANCE

3-47. EXHAUST SYSTEM MAINTENANCE TASK SUMMARY

TASK PARA.	PROCEDURES	PAGE NO.
3-48.	Tailpipe Replacement	3-90
3-49.	Muffler and Catalytic Converter Replacement	3-92
3-50.	Exhaust Pipe Replacement	3-94
3-51.	Manifold-to-Turbocharger Exhaust Pipe Replacement	3-96
3-52.	Rear Heat Shield Replacement	3-97
3-53.	Tailpipe Hanger Replacement	3-98
3-54.	Tailpipe Insulator Replacement	3-99
3-55.	Muffler Support Bracket Maintenance	3-100
3-56.	Right Exhaust Manifold Heat Shield Replacement	3-102
3-57.	Exhaust Manifolds Replacement	3-104
3-58.	Right Rear Heat Shield Replacement	3-106
3-59.	Muffler Hanger Replacement	3-107

3-48. TAILPIPE REPLACEMENT

This task covers:

a. Removal **b. Installation**

INITIAL SETUP:

Tools

General mechanic's tool kit:
automotive (Appendix B, Item 1)
Maintenance and repair shop equipment:
automotive (Appendix B, Item 2)

Materials/Parts

Gasket (Appendix G, Item 39)
Three locknuts (Appendix G, Item 106)
Two lockwashers (Appendix G, Item 144)

Manual References

TM 9-2320-387-10
TM 9-2320-387-24P

General Safety Instructions

Do not touch hot exhaust system components with bare hands.

Maintenance Level

Unit

WARNING

Do not touch hot exhaust system components with bare hands.
Severe injury may result.

a. Removal

1. Remove three locknuts (9), washers (6), capscrews (5), and washers (6) from tailpipe (1) and muffler (7). Discard locknuts (9).
2. Remove two nuts (3), lockwashers (4), and U-bolt (10) from tailpipe (1) and hanger (2). Discard lockwashers (4).
3. Remove tailpipe (1) and gasket (8) from muffler (7). Discard gasket (8).

3-48. TAILPIPE REPLACEMENT (Cont'd)

b. Installation

1. Install gasket (8) and tailpipe (1) on muffler (7) with three washers (6), capscrews (5), washers (6), and locknuts (9). Tighten locknuts (9) to 26 lb-ft (35 N·m).
2. Install tailpipe (1) on hanger (2) with U-bolt (10), two lockwashers (4), and nuts (3).

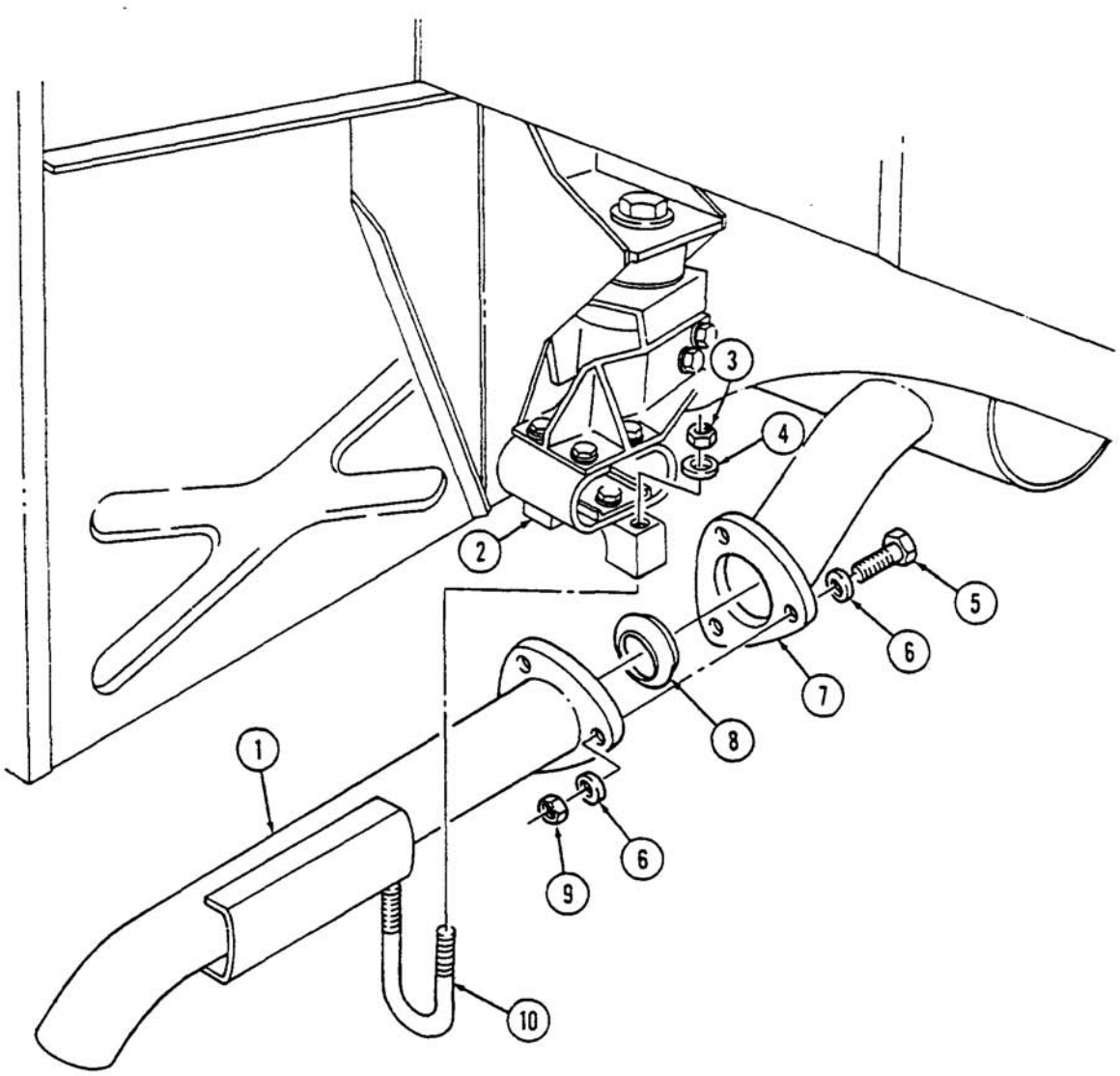

FOLLOW-ON TASK: Start engine (TM 9-2320-387-10) and check for exhaust leaks.

3-49. MUFFLER AND CATALYTIC CONVERTER REPLACEMENT

This task covers:

a. Removal **b. Installation**

INITIAL SETUP:

Tools

General mechanic's tool kit: automotive (Appendix B, Item 1)
Maintenance and repair shop equipment: automotive (Appendix B, Item 2)

Material Parts

Nine locknuts (Appendix G, Item 106)
Gasket (Appendix G, Item 39)
Seven lockwashers (Appendix G, Item 145)

Manual References

TM 9-2320-387-24P

Equipment Condition

Tailpipe removed (para. 3-48).

General Safety Instructions

Do not touch hot exhaust system components with bare hands.

Maintenance Level

Unit

WARNING

Do not touch hot exhaust system components with bare hands.
Severe injury may result.

a. Removal

CAUTION

Support muffler and catalytic converter during replacement.
Failure to do so may result in damage to equipment.

1. Remove two clamps (14) and heat shield (15) from crossover pipe (17).
2. Remove two nuts (13), U-bolt (23), and support bracket (20) from heat shield (10) and catalytic converter (24).
3. Remove two nuts (6), lockwashers (5), and washers (4) from heat shield (10). Discard lockwashers (5).
4. Remove capscrew (7), lockwasher (8), and Y-clip (9) at location A and screw (12), lockwashers (11) and (28), and nut (29) at location B and heat shield (10) from bracket (27). Discard lockwashers (8), (11), and (28).
5. Remove two nuts (25), washers (26), capscrews (31), washers (30), and bracket (27) from muffler (32).
6. Remove three locknuts (18), washers (19), capscrews (22), and washers (21) from catalytic converter (24) and crossover pipe (17). Discard locknuts (18).
7. Remove two nuts (40), lockwashers (39), and U-bolt (37) from catalytic converter (24) and support bracket (38). Discard lockwashers (39).
8. Remove gasket (16) by pulling catalytic converter (24) towards rear of vehicle. Discard gasket (16).

NOTE

It may be necessary to lower rear propeller shaft (para. 6-4) to gain access to locknuts on muffler hanger.

9. Remove four locknuts (3), washers (2), capscrews (33), washers (34), two retaining plates (35), and muffler (32) from muffler hanger (1). Discard locknuts (3).
10. Remove two locknuts (41), washers (46), capscrews (44), washers (43), insulator (36), retaining plate (45), and bracket (42) from muffler (32). Discard locknuts (41).

b. Installation

1. Install bracket (42), insulator (36), and retaining plate (45) on muffler (32) with two washers (43), capscrews (44), washers (46), and locknuts (41). Tighten locknuts (41) to 10 lb-ft (14 N·m).
2. Install muffler (32) and two retaining plates (35) on muffler hanger (1) with four washers (34), capscrews (33), washers (2), and locknuts (3).
3. Install catalytic converter (24) on support bracket (38) with U-bolt (37), two lockwashers (39), and nuts (40).

3-49. MUFFLER AND CATALYTIC CONVERTER REPLACEMENT (Cont'd)

4. Install gasket (16) and catalytic converter (24) on crossover pipe (17) with three washers (21), capscrews (22), washers (19), and locknuts (18). Tighten locknuts (18) to 26 lb-ft (35 N·m).
5. Install bracket (27) on muffler (32) with two washers (30), capscrews (31), washers (26), and nuts (25).
6. Install bracket (27) on heat shield (10) with Y-clip (9), lockwasher (8), and screw (7) at location A and two lockwashers (11) and (28), screw (12), and nut (29) at location B.
7. Install heat shield (10) on muffler (32) with two washers (4), lockwashers (5), and nuts (6).
8. Install heat shield (10) and bracket (20) on catalytic converter (24) with U-bolt (23) and two nuts (13).
9. Install heat shield (15) on crossover pipe (17) with two clamps (14). Tighten clamps (14) to 60 lb-in. (7 N·m).

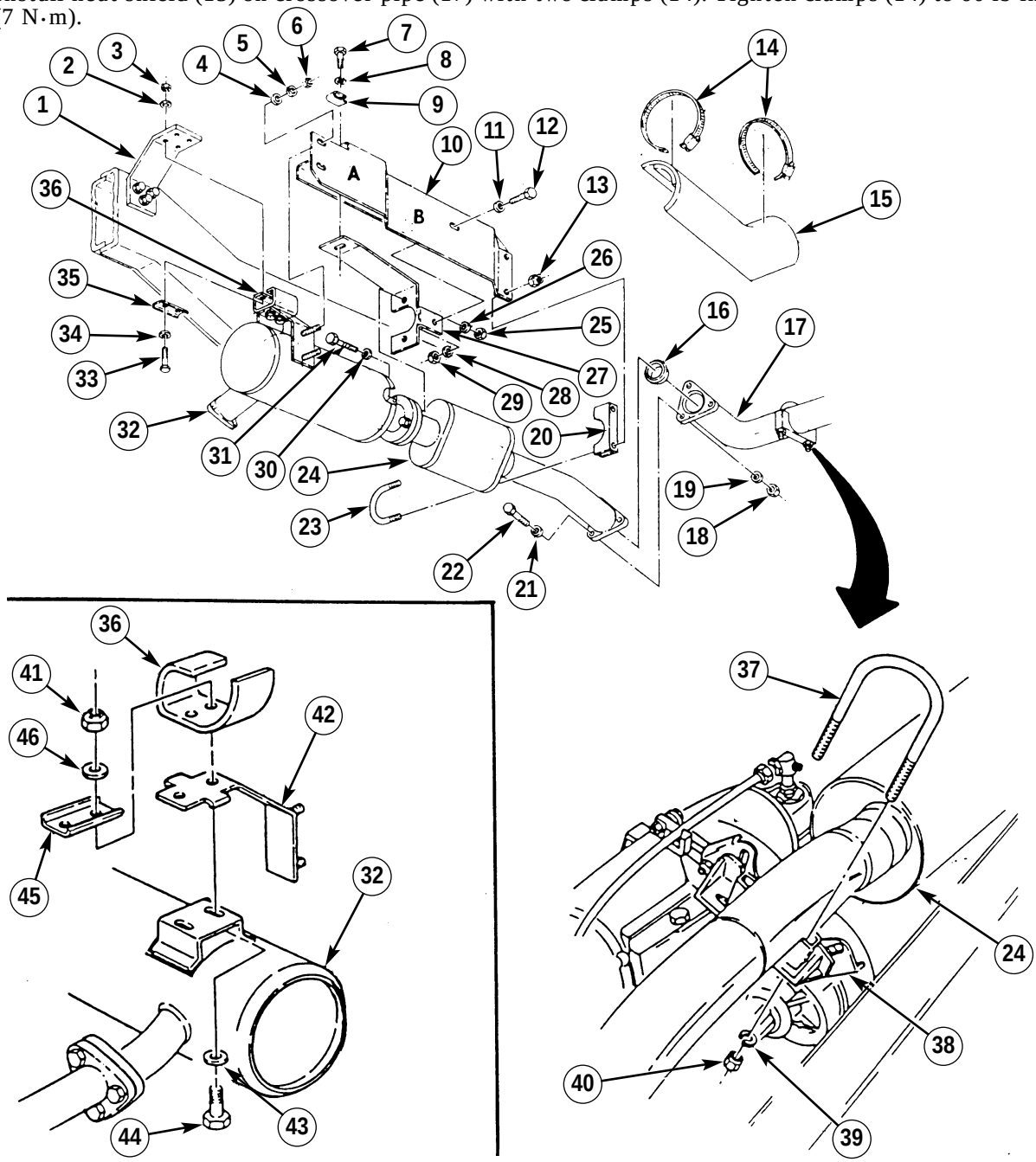

FOLLOW-ON TASK: Install tailpipe (para. 3-48).

3-50. EXHAUST PIPE REPLACEMENT

This task covers:

a. Removal **b. Installation**

INITIAL SETUP:

Tools

General mechanic's tool kit:
automotive (Appendix B, Item 1)
Maintenance and repair shop equipment:
automotive (Appendix B, Item 2)

Materials/Parts

Three locknuts (Appendix G, Item 106)
Gasket (Appendix G, Item 39)

Manual References

TM 9-2320-387-10
TM 9-2320-387-24P

Equipment Condition

Right rear heat shield removed (para. 3-58).

General Safety Instructions

Do not touch hot exhaust system components with bare hands.

Maintenance Level

Unit

WARNING

Do not touch hot exhaust system components with bare hands.
Severe injury may result.

a. Removal

1. Remove two clamps (12) and heat shield (11) from exhaust pipe (3).
2. Remove three locknuts (5), washers (4), capscrews (7), washers (4), and exhaust pipe (3) from catalytic converter (2). Discard locknuts (5).
3. Remove two capscrews (8), washers (9), flange (10), and exhaust pipe (3) from wastegate housing (1).
4. Remove and discard gasket (6).

b. Installation

1. Install flange (10) and exhaust pipe (3) on wastegate housing (1) with two washers (9) and capscrews (8).
2. Install gasket (6) and exhaust pipe (3) on catalytic converter (2) with three washers (4), capscrews (7), washers (4), and locknuts (5). Tighten locknuts (5) to 26 lb-ft (35 N·m).
3. Install heat shield (11) on exhaust pipe (3) with two clamps (12).

3-50. EXHAUST PIPE REPLACEMENT (Cont'd)

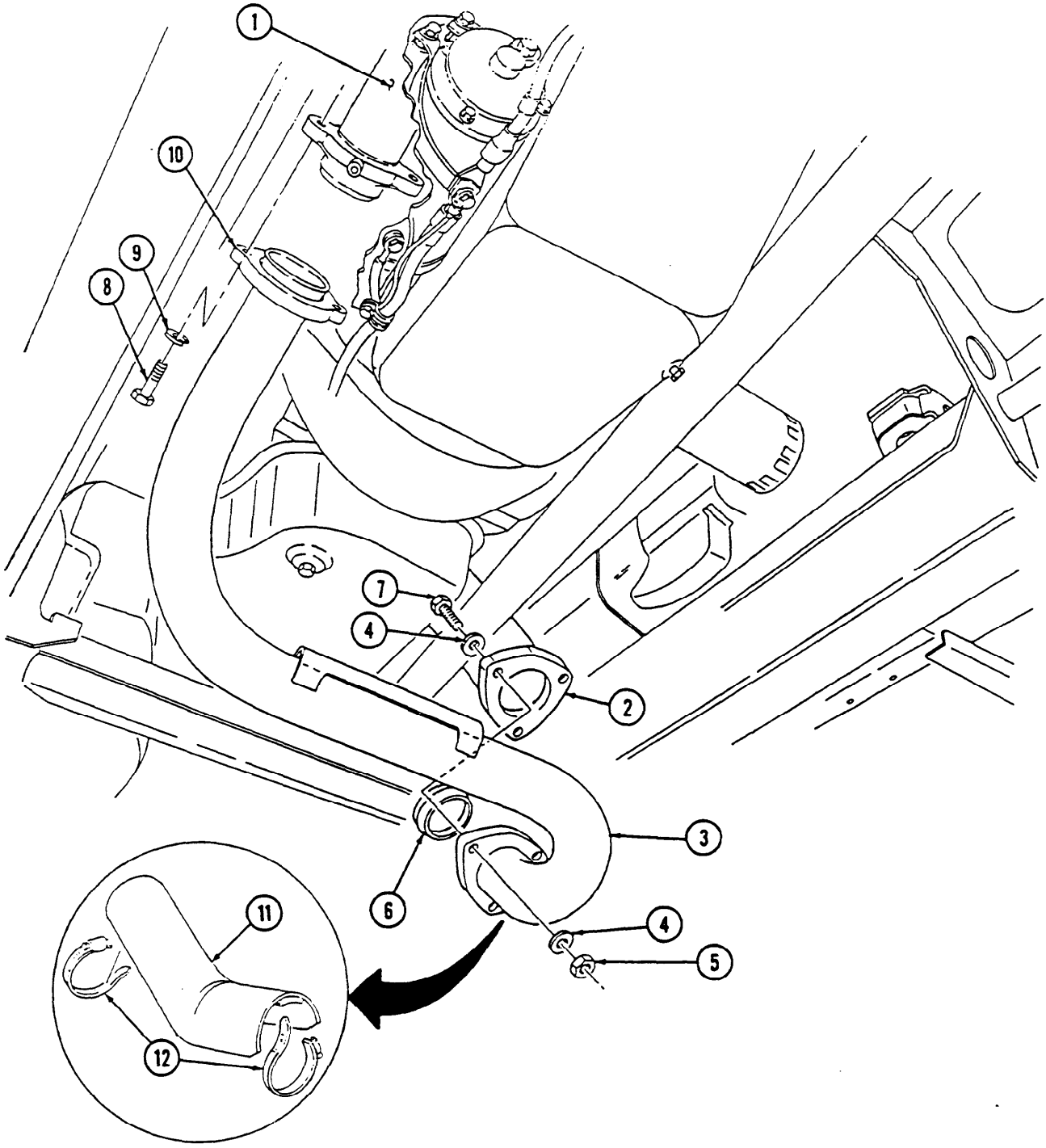

FOLLOW-ON TASKS:
- Start engine (TM 9-2320-387-10) and check for exhaust leaks.
- Install right rear heat shield (para. 3-58).

3-51. MANIFOLD-TO-TURBOCHARGER EXHAUST PIPE REPLACEMENT

This task covers:

a. Removal

b. Installation

INITIAL SETUP:

Tools
General mechanic's tool kit: automotive (Appendix B, Item 1)

Manual References
TM 9-2320-387-24P

Equipment Condition
Rear heat shield removed (para. 3-52).

General Safety Instructions
Do not touch hot exhaust system components with bare hands.

Maintenance Level
Unit

WARNING

Do not touch hot exhaust system components with bare hands. Severe injury may result.

NOTE

The replacement procedure for left and right manifold-to-turbocharger exhaust pipes is basically the same. This procedure covers the left exhaust pipe.

a. Removal

1. Loosen clamp (5) and remove exhaust pipe (1) from exhaust manifold (4). Slide clamp (5) onto pipe (1).
2. Loosen clamp (2) and remove exhaust pipe (1) from turbocharger (3). Slide clamp (2) onto exhaust pipe (1).
3. Remove clamps (2) and (5) from exhaust pipe (1).

b. Installation

1. Install two clamps (2) and (5) on exhaust pipe (1).
2. Install exhaust pipe (1) on turbocharger (3) and tighten clamp (2).
3. Install exhaust pipe (1) on exhaust manifold (4) and tighten clamp (5).

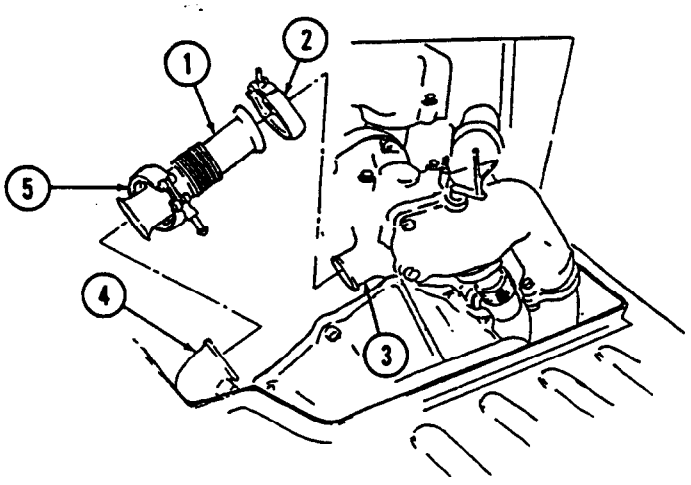

FOLLOW-ON TASK: Install rear heat shield (para. 3-52).

3-52. REAR HEAT SHIELD REPLACEMENT

This task covers:

a. Removal **b. Installation**

INITIAL SETUP:

Tools

General mechanic's tool kit: automotive (Appendix B, Item 1)

Manual References

TM 9-2320-387-24P

Equipment Condition

Right rear heat shield removed (para. 3-58).

General Safety Instructions

Do not touch hot exhaust system components with bare hands.

Maintenance Level

Unit

WARNING

Do not touch hot exhaust system components with bare hands.
Severe injury may result.

a. Removal

1. Remove capscrew (7) from rear heat shield (2) and left exhaust manifold (5).
2. Remove capscrew (1) from rear heat shield (2) and left cylinder head (6).
3. Remove two capscrews (3) and rear heat shield (2) from turbocharger (4).

b. Installation

1. Install rear heat shield (2) on turbocharger (4) with two capscrews (3).
2. Install rear heat shield (2) on left cylinder head (6) with capscrew (1).
3. Install rear heat shield (2) on left exhaust manifold (5) with capscrew (7).

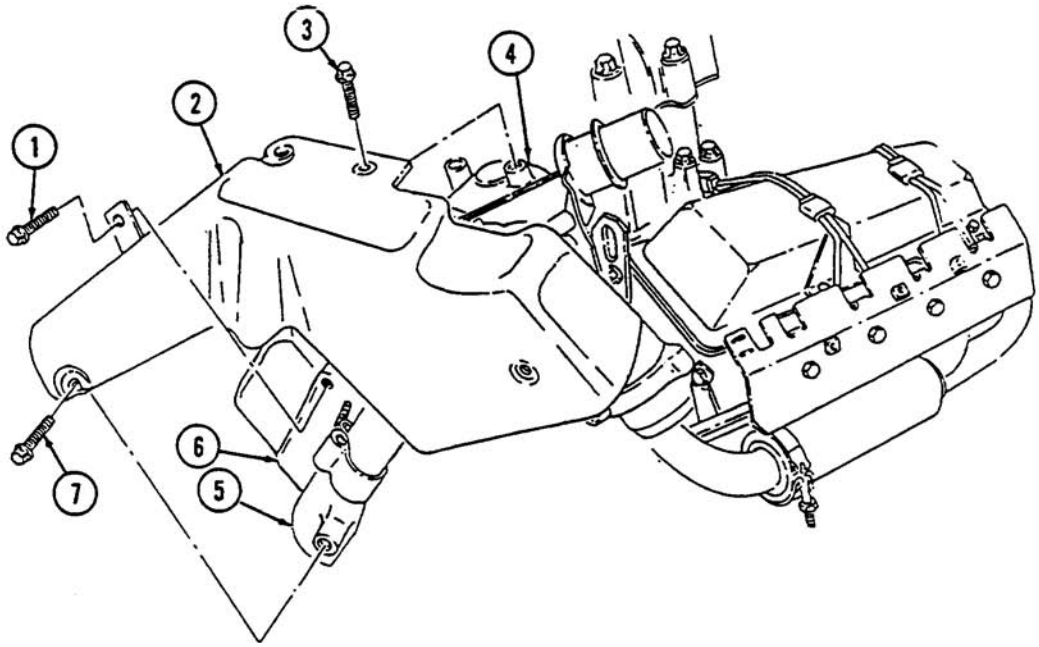

FOLLOW-ON TASK: Install right rear heat shield (para. 3-58).

3-53. TAILPIPE HANGER REPLACEMENT

This task covers:

a. Removal **b. Installation**

INITIAL SETUP:

Tools

General mechanic's tool kit: automotive (Appendix B, Item 1)
Maintenance and repair shop equipment: automotive (Appendix B, Item 2)

Materials/Parts

Six locknuts (Appendix G, Item 106)

Manual References

TM 9-2320-387-24P

General Safety Instructions

Do not touch hot exhaust system components with bare hands.

Maintenance Level

Unit

WARNING

Do not touch hot exhaust system components with bare hands.
Severe injury may result.

a. Removal

1. Remove four locknuts (5), washers (4), capscrews (9), washers (4), two insulator reinforcement plates (10), and insulator (8) from tailpipe hanger (6). Discard locknuts (5).
2. Remove two locknuts (1), washers (2), capscrews (7), washers (2), and tailpipe hanger (6) from frame (3). Discard locknuts (1).

b. Installation

1. Install tailpipe hanger (6) on frame (3) with two washers (2), capscrews (7), washers (2), and locknuts (1). Tighten capscrews (7) to 26 lb-ft (35 N·m).
2. Install insulator (8) and two insulator reinforcement plates (10) on tailpipe hanger (6) with four washers (4), capscrews (9), washers (4), and locknuts (5).

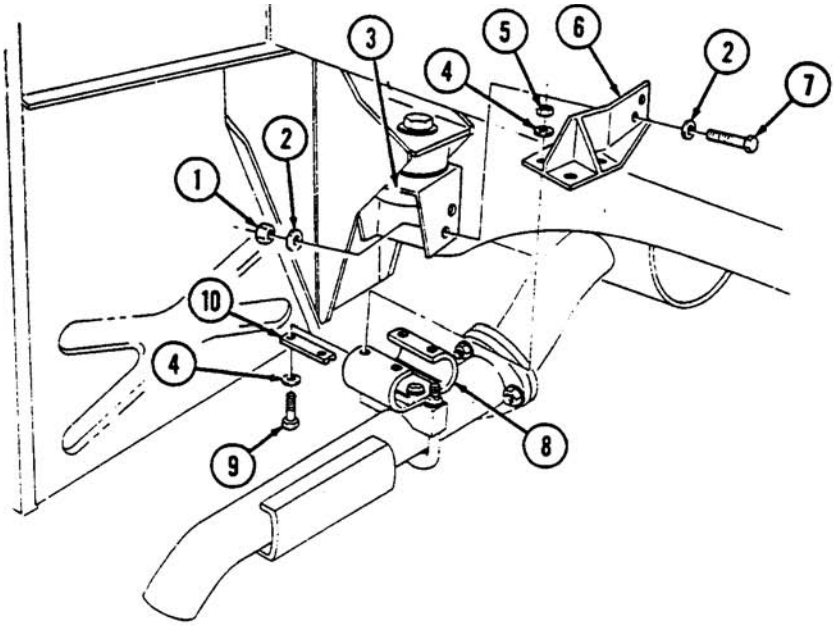

3-54. TAILPIPE INSULATOR REPLACEMENT

This task covers:

a. Removal **b. Installation**

INITIAL SETUP:

Tools

General mechanic's tool kit:
automotive (Appendix B, Item 1)
Maintenance and repair shop equipment:
automotive (Appendix B, Item 2)

Materials/Parts

Four locknuts (Appendix G, Item 106)
Two lockwashers (Appendix G, Item 144)

Manual References

TM 9-2320-387-24P

Equipment Condition

Tailpipe removed (para. 3-48).

General Safety Instructions

Do not touch hot exhaust system components with bare hands.

Maintenance Level

Unit

WARNING

Do not touch hot exhaust system components with bare hands.
Severe injury may result.

a. Removal

1. Remove four locknuts (5), washers (6), capscrews (9), washers (8), two reinforcement plates (7), and insulator (11) from tailpipe hanger (4). Discard locknuts (5).
2. Remove two capscrews (3), lockwashers (2), reinforcement plate (1), and U-bolt clamp (10) from insulator (11). Discard lockwashers (2).

b. Installation

1. Install reinforcement plate (1) and U-bolt clamp (10) on insulator (11) with two lockwashers (2) and capscrews (3). Tighten capscrews (3) to 10 lb-ft (14 N·m).
2. Install insulator (11) and two reinforcement plates (7) on tailpipe hanger (4) with four washers (8), capscrews (9), washers (6), and locknuts (5). Tighten locknuts (5) to 10 lb-ft (14 N·m).

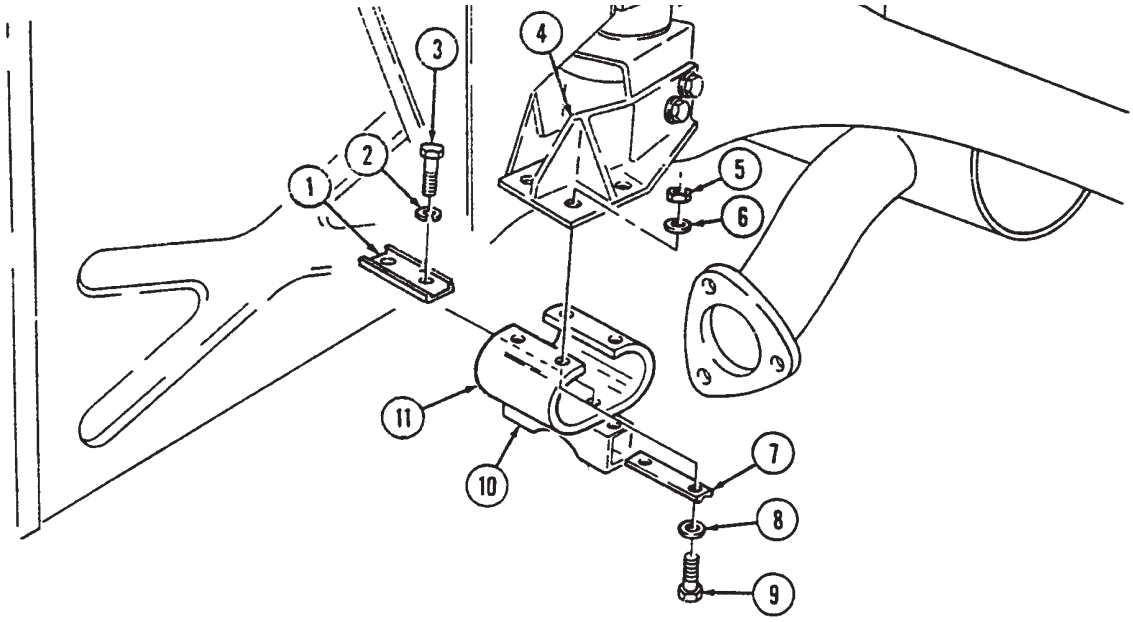

FOLLOW-ON TASK: Install tailpipe (para. 3-48).

3-55. MUFFLER SUPPORT BRACKET MAINTENANCE

This task covers:

a. Removal
b. Disassembly
c. Assembly
d. Installation

INITIAL SETUP:

Tools
General mechanic's tool kit: automotive (Appendix B, Item 1)
Maintenance and repair shop equipment: automotive (Appendix B, Item 2)

Materials/Parts
Four locknuts (Appendix G, Item 106)

Manual References
TM 9-2320-387-24P

Equipment Condition
Muffler and catalytic converter removed (para. 3-49).

Maintenance Level
Unit

a. Removal

NOTE

Hold bolt heads on transfer case securely to prevent changing torque or damaging transfer case seal.

Remove two locknuts (1), washers (2), and support bracket assembly (3) from transfer case (4). Discard locknuts (1).

b. Disassembly

1. Remove two locknuts (9), washers (8), capscrews (5), washers (6), mounting bracket (11), and washers (6) from support plate (10). Discard locknuts (9).
2. Remove two insulators (7) from mounting plate (11).

c. Assembly

1. Install two insulators (7) in mounting bracket (11).
2. Install two washers (6) between mounting bracket (11) and support plate (10) with two washers (6), capscrews (5), washers (8), and locknuts (9). Tighten locknuts (9) to 15 lb-ft (20 N·m).

d. Installation

NOTE

Hold bolt heads on transfer case securely to prevent changing torque or damaging transfer case seal.

Install support bracket assembly (3) on transfer case (4) with two washers (2) and locknuts (1). Tighten locknuts (1) to 15 lb-ft (20 N·m).

3-55. MUFFLER SUPPORT BRACKET MAINTENANCE (Cont'd)

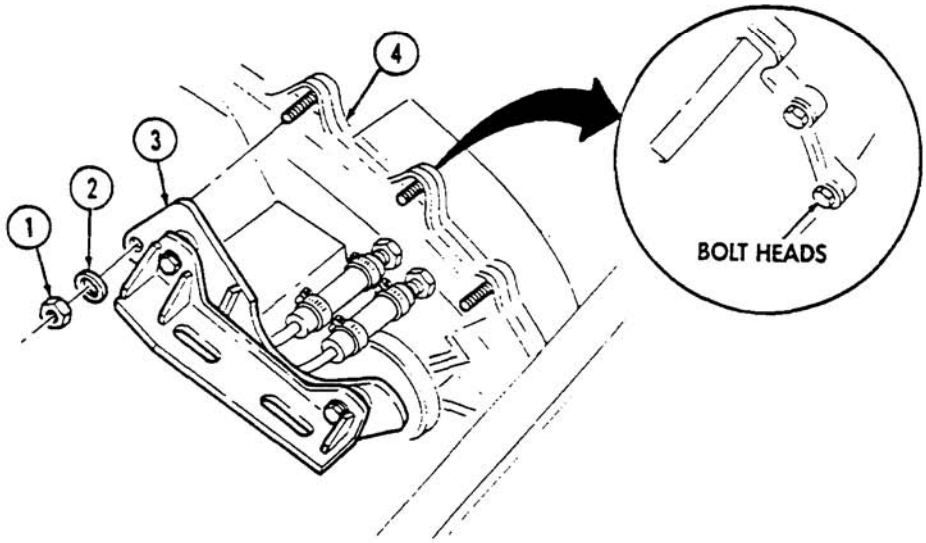

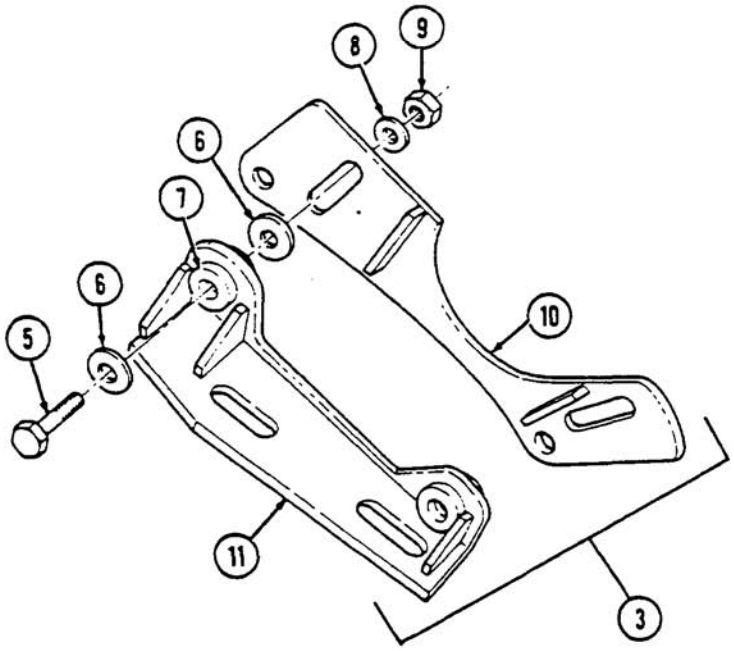

FOLLOW-ON TASK: Install muffler and catalytic converter (para. 3-49).

3-56. RIGHT EXHAUST MANIFOLD HEAT SHIELD REPLACEMENT

This task covers:

a. Removal **b. Installation**

INITIAL SETUP:

Tools

General mechanic's tool kit: automotive (Appendix B, Item 1)

Materials/Parts

Two lockwashers (Appendix G, Item 138)

Manual References

TM 9-2320-387-10
TM 9-2320-387-24P

Equipment Condition

- Hood raised and secured (TM 9-2320-387-10).
- Right rear heat shield removed (para. 3-58).
- Starter removed (para. 4-11).

General Safety Instructions

Do not touch hot exhaust system components with bare hands.

Maintenance Level

Unit

WARNING

Do not touch hot exhaust system components with bare hands.
Severe injury may result.

a. Removal

1. Remove two capscrews (5), lockwashers (6), and harness clamps (4) from right exhaust manifold heat shield (3). Discard lockwashers (6).
2. Remove four capscrews (7) and right exhaust manifold heat shield (3) from exhaust manifold (2) and cylinder head (1).

b. Installation

1. Install right exhaust manifold heat shield (3) on exhaust manifold (2) and cylinder head (1) with four capscrews (7).
2. Install two harness clamps (4) on right exhaust manifold heat shield (3) with two lockwashers (6) and capscrews (5).

3-56. RIGHT EXHAUST MANIFOLD HEAT SHIELD REPLACEMENT (Cont'd)

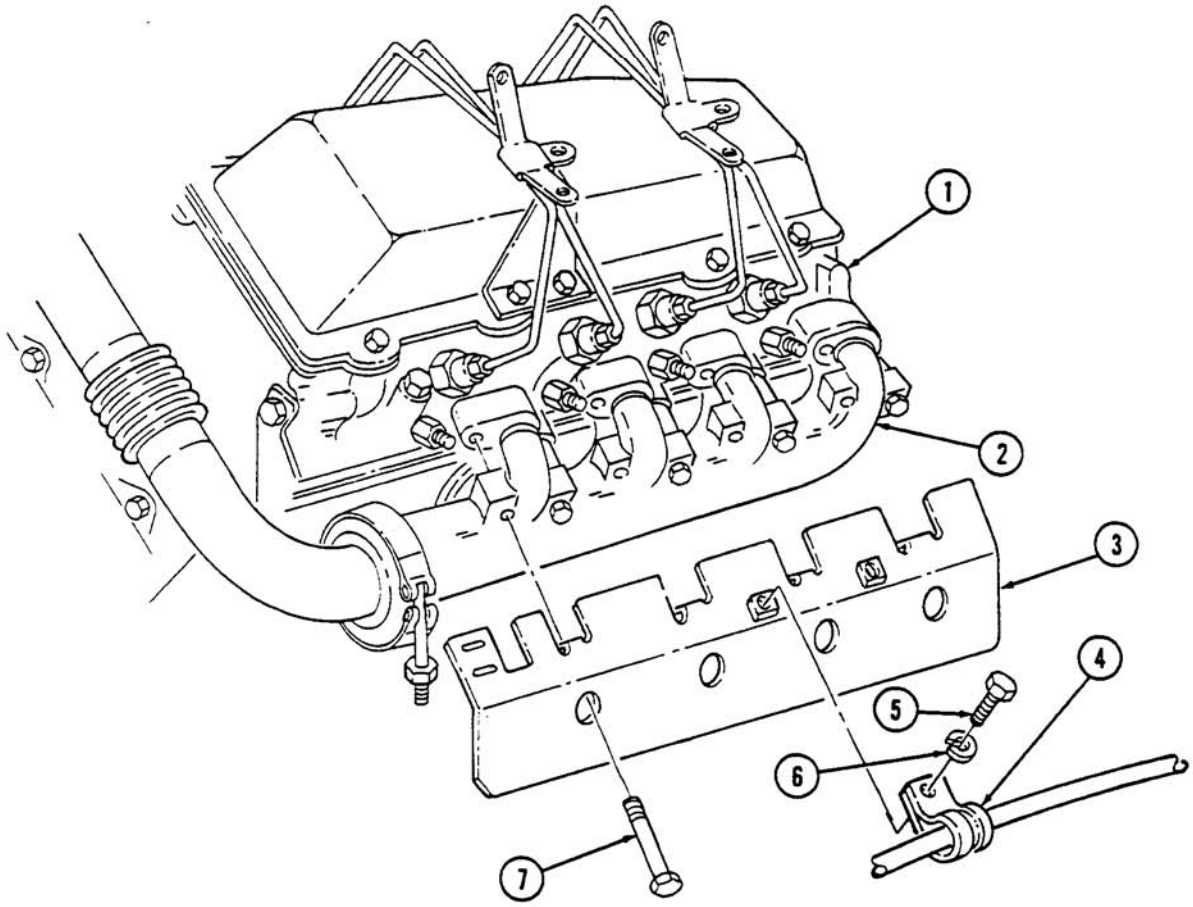

FOLLOW-ON TASKS:
- Install right rear heat shield (para. 3-58).
- Install starter (para. 4-11).
- Start engine (TM 9-2320-387-10) and check for exhaust leaks.
- Lower and secure hood (TM 9-2320-387-10).

3-57. EXHAUST MANIFOLDS REPLACEMENT

This task covers:

a. Removal **b. Installation**

INITIAL SETUP:

Tools

General mechanic's tool kit: automotive (Appendix B, Item 1)
Maintenance and repair shop equipment: automotive (Appendix B, Item 2)

Manual References

TM 9-2320-387-24P

Equipment Condition

- Oil dipstick tube removed (para. 3-2) (left side only).
- 200-ampere alternator removed (para. 4-5) (left side only).

Equipment Condition (Cont'd)

- Air horn removed (para. 3-14) (right side only).
- Right exhaust manifold heat shield removed (para. 3-56) (right side only).
- Rear heat shield removed (para. 3-52) (left side only).

General Safety Instructions

Do not touch hot exhaust system components with bare hands.

Maintenance Level

Unit

WARNING

Do not touch hot exhaust system components with bare hands. Severe injury may result.

NOTE

The replacement procedure for right and left exhaust manifolds is basically the same. This procedure covers the right exhaust manifold.

a. Removal

1. Loosen and slide clamp (4) onto exhaust pipe (5).
2. Remove four (eight if left side) capscrews (1) and exhaust manifold (2) from cylinder head (3).
3. Clean all gasket material from head mounting surface and manifold mating surface.

b. Installation

CAUTION

Alternate screw tightening. Flanges may break when each screw is tightened completely before others are snugged up.

1. Install exhaust manifold (2) on cylinder head (3) with four (eight if left side) capscrews (1). Tighten capscrews (1) to 25-33 lb-ft (34-45 N·m).
2. Install exhaust pipe (5) on exhaust manifold (2) and tighten clamp (4).

3-57. EXHAUST MANIFOLDS REPLACEMENT (Cont'd)

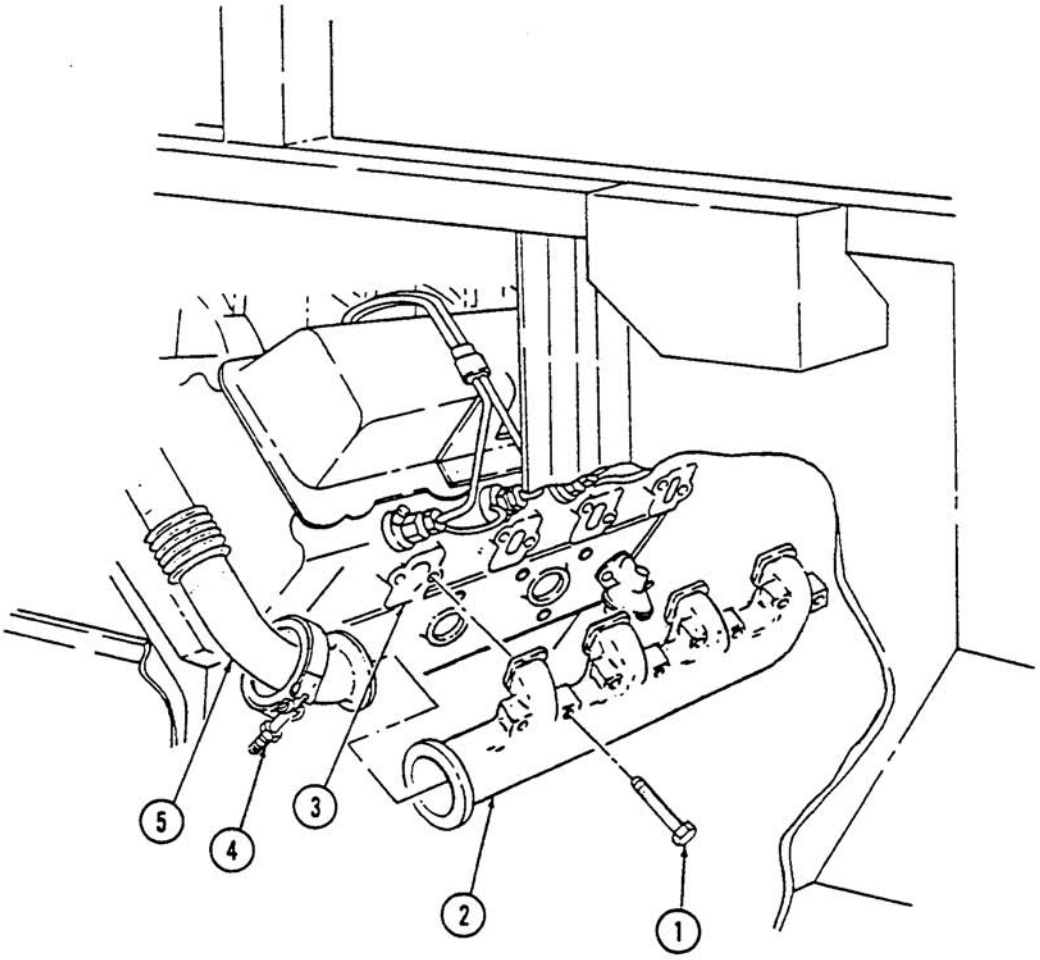

FOLLOW-ON TASKS:
- Install 200-ampere alternator (para. 4-5) (left side only).
- Install oil dipstick tube (para. 3-2) (left side only).
- Install rear heat shield (para. 3-52) (left side only).
- Install air horn (para. 3-14) (right side only).
- Install right exhaust manifold heat shield (para. 3-56) (right side only).

3-58. RIGHT REAR HEAT SHIELD REPLACEMENT

This task covers:

a. Removal **b. Installation**

INITIAL SETUP:

Tools
General mechanic's tool kit: automotive (Appendix B, Item 1)

Manual References
TM 9-2320-387-24P

Equipment Condition
Engine access cover removed (para. 10-22).

General Safety Instructions
Do not touch hot exhaust system components with bare hands.

Maintenance Level
Unit

WARNING

Do not touch hot exhaust system components with bare hands.
Severe injury may result.

a. Removal

1. Remove capscrew (6) from transmission dipstick tube (5), right rear heat shield (4), rear heat shield (1), and wastegate housing (7).
2. Remove two capscrews (3) and right rear heat shield (4) from right exhaust manifold heat shield (2).
3. Remove nut (8), washers (9) and (11), and screw (10) from heat shields (4) and (12) and separate heat shields (4) and (12).

b. Installation

1. Assemble heat shields (4) and (12) with screw (10), washers (11) and (9), and nut (8).
2. Install right rear heat shield (4) on right exhaust manifold heat shield (2) with two capscrews (3).
3. Install right rear heat shield (4) and transmission dipstick tube (5) on rear heat shield (1) and wastegate housing (7) with capscrew (6).

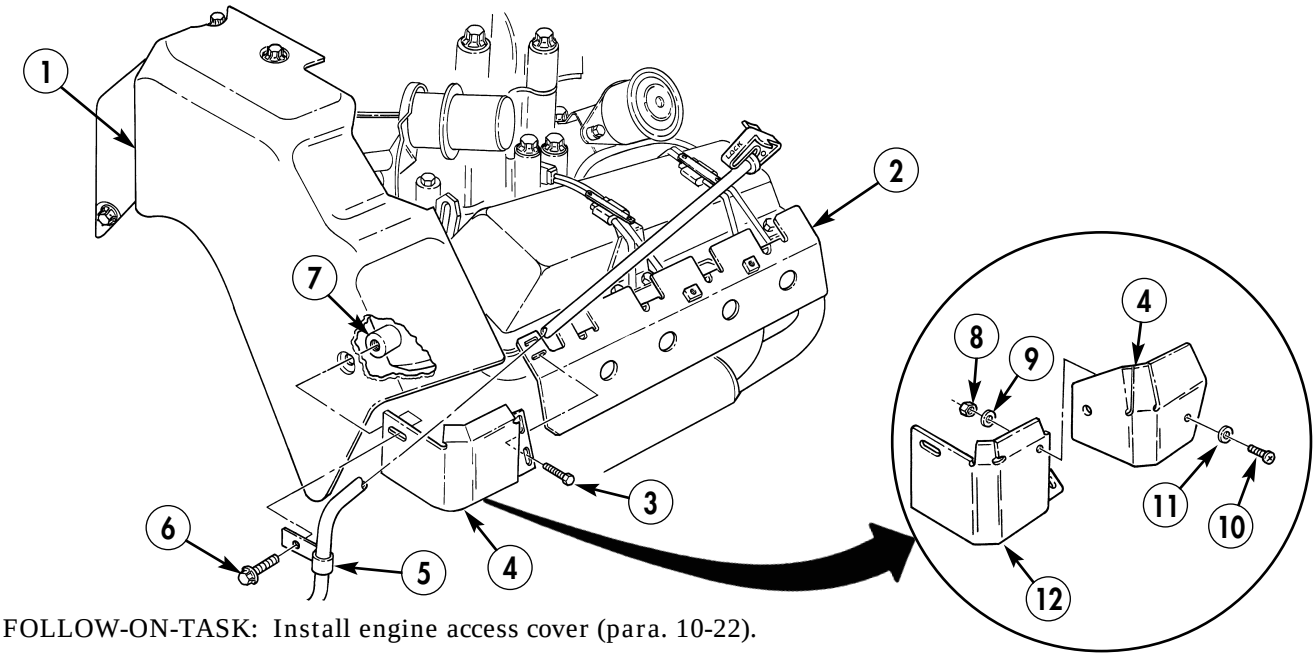

FOLLOW-ON-TASK: Install engine access cover (para. 10-22).

3-59. MUFFLER HANGER REPLACEMENT

This task covers:

a. Removal **b. Installation**

INITIAL SETUP:

Tools
General mechanic's tool kit: automotive (Appendix B, Item 1)

Materials/Parts
Three locknuts (Appendix G, Item 85)

Manual References
TM 9-2320-387-24P

Equipment Condition
Muffler and catalytic converter removed (para. 3-49).

Maintenance Level
Unit

a. Removal

Remove three locknuts (4), six washers (3), three screws (5), and muffler hanger (1) from frame rail (2). Discard locknuts (4).

b. Installation

Install muffler hanger (1) on frame rail (2) with three screws (5), six washers (3), and three locknuts (4). Tighten locknuts (4) to 75 lb-ft (102 N·m).

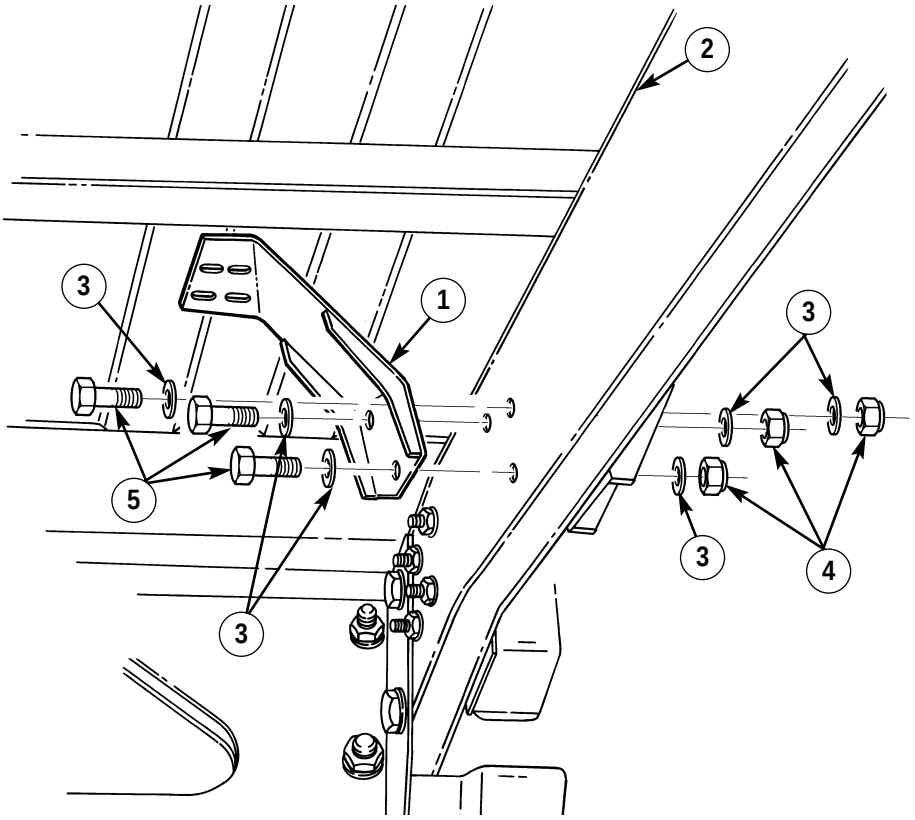

FOLLOW-ON TASK: Install muffler and catalytic converter (para. 3-49).

Section V. COOLING SYSTEM MAINTENANCE

3-60. COOLING SYSTEM MAINTENANCE TASK SUMMARY

TASK PARA.	PROCEDURES	PAGE NO.
3-61.	Cooling System Servicing	3-110
3-62.	Radiator and Fan Shroud Assembly Maintenance	3-112
3-63.	Airlift-to-Shroud Shield Assembly Replacement	3-118
3-64.	Radiator Support Replacement	3-119
3-65.	Surge Tank Replacement	3-120
3-66.	Surge Tank-to-Radiator Vent Hose Replacement	3-121
3-67.	Surge Tank-to-Water Crossover Vent Hose Replacement	3-122
3-68.	Thermostat Bypass Hose Replacement	3-123
3-69.	Fan Drive Hose and Quick-Disconnect Replacement	3-124
3-70.	Radiator Inlet Hose Replacement	3-126
3-71.	Radiator Lower Tube Assembly Replacement	3-127
3-72.	Lower Radiator Hose Replacement	3-128
3-73.	Water Pump Inlet Hose Replacement	3-129
3-74.	Surge Tank-to-Lower Radiator Tube Hose Replacement	3-130
3-75.	Surge Tank Overflow Hose Replacement	3-131
3-76.	Thermostat Replacement	3-132
3-77.	Water Pump Pulley Replacement	3-133
3-78.	Water Pump and Adapter Plate Maintenance	3-134
3-79.	Water Crossover Maintenance	3-138
3-80.	Fan Drive and Fan Blade Maintenance	3-140
3-81.	Serpentine Drivebelt Maintenance (Serial Numbers 196900 and Below)	3-142
3-81.1.	Serpentine Drivebelt Maintenance (Serial Numbers 196901 and Above)	3-142.4
3-82.	Tensioner, Idler Pulleys, and Mounting Hardware Replacement	3-142.8
3-82.1.	Tensioner and Mounting Hardware Replacement (Serial Numbers 196901 and Above)	3-144
3-82.2.	Idler Pulleys and Support Replacement, Vehicles W/O A/C (Serial Numbers 196901 and Above)	3-144.1
3-82.3.	Grooved Idler Pulley and Support Replacement (Serial Numbers 196901 and Above)	3-144.2
3-82.4.	Mounting Bracket Replacement, Vehicles W/O A/C (Serial Numbers 196901 and Above)	3-144.3
3-82.5.	Mounting Bracket Replacement, Vehicles W/ A/C (Serial Numbers 196901 and Above)	3-144.4
3-82.6.	Idler Pulley Replacement (Serial Numbers 196901 and Above)	3-145
3-82.7.	Idler Pulley Bracket Replacement (Serial Numbers 196901 and Above)	3-146
3-83.	Fan Drive Friction Lining Replacement	3-147
3-84.	Differential Cooler Lines Replacement (Serial Numbers 188974 and Below)	3-148
3-85.	Differential Front Cooler Lines Replacement (Serial Numbers 188975 and Above)	3-170

3-61. COOLING SYSTEM SERVICING

This task covers:

a. Depressurizing
b. Draining System
c. Preventive Cleaning
d. Filling System

INITIAL SETUP:

Tools
General mechanic's tool kit:
automotive (Appendix B, Item 1)
Maintenance and repair shop equipment:
automotive (Appendix B, Item 2)

Test Equipment
Radiator tester (Appendix B, Item 49)

Materials/Parts
Antifreeze (Appendix C, Item 15)

Manual References
TM 9-2320-387-10
TM 9-2320-387-24P

Manual References (Cont'd)
TM 750-254
TB 750-651

Equipment Condition
Hood raised and secured (TM 9-2320-387-10).

General Safety Instructions
Do not remove surge tank filler cap before releasing internal pressure.

Maintenance Level
Unit

a. Depressurizing

WARNING

Do not remove surge tank filler cap before depressurizing system when engine temperature is above 190°F (88°C). Steam or hot coolant under pressure may cause severe burns.

1. If engine is hot, remove surge tank filler cap (1) by placing a thick cloth over cap (1). Press down and turn counterclockwise to its first stop to release internal pressure.
2. After pressure has escaped, press down and turn cap (1) counterclockwise again and remove.

b. Draining System

1. If engine is hot, depressurize system (see task a.).

NOTE

Have drainage container ready to catch coolant.

2. Open drainvalve (4) and allow system to drain.
3. Close drainvalve (4).

c. Preventive Cleaning

1. For preventive cleaning, refer to TB 750-651.
2. Test surge tank filler cap (1); refer to TM 750-254.

d. Filling System

NOTE

The cooling system for the vehicles covered in this manual has a 26 qt (24.6 L) capacity. Continue filling and allow air to escape. Ensure surge tank coolant level is 3/4 full before securing filler cap.

1. Ensure radiator drainvalve (4) is closed and heater control valve (3) is open (pull TEMP knob on dash to MAX position).

3-61. COOLING SYSTEM SERVICING (Cont'd)

2. Fill system with proper antifreeze solution. See table 3-1 for preparation of antifreeze solutions.
3. Secure filler cap (1) to surge tank (2).
4. Run engine at fast idle (approximately 1,500 rpm) until engine temperature reaches 190°F (88°C), opening thermostat to circulate coolant.
5. Depressurize system (see task a.).
6. Fill with proper antifreeze solution until surge tank (2) is 3/4 full. See table 3-1 for preparation of antifreeze solutions.
7. Secure filler cap (1) to surge tank (2).
8. Run engine at fast idle (approximately 1,500 rpm) until temperature reaches 190°F (88°C), opening thermostat, and stop engine.
9. Depressurize system (see task a.). Use tester to ensure proper coolant protection is provided.
10. Secure filler cap (1) to surge tank (2).

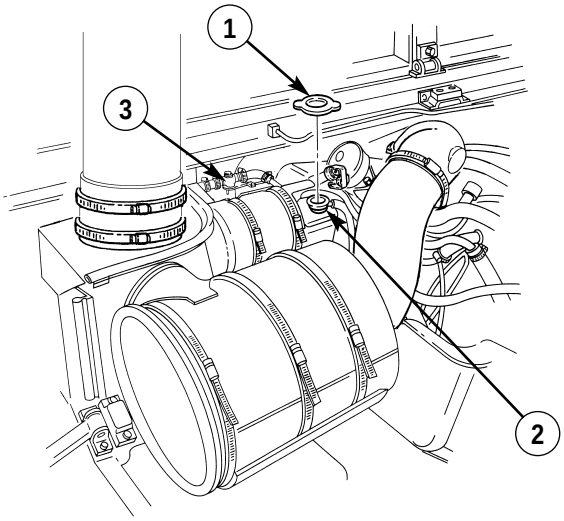

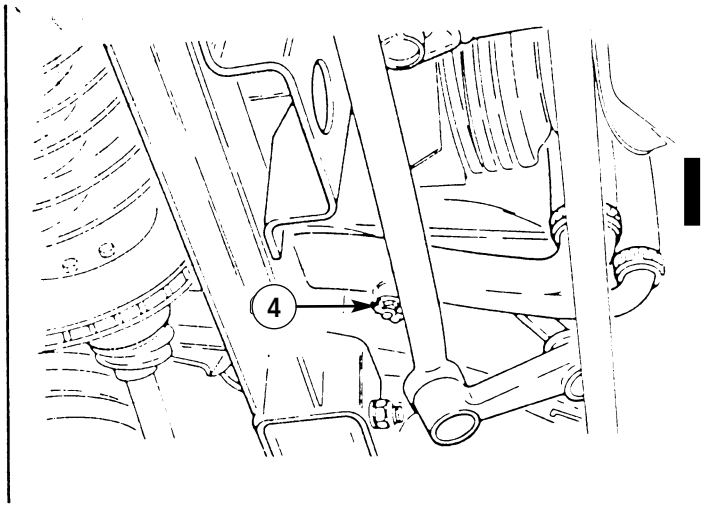

Table 3-1. Guide for Preparation of Antifreeze Solutions.

ETHYLENE-GLYCOL INHIBITED MIL-A-46153			
LOWEST EXPECTED AMBIENT TEMPERATURE		PINTS PER GALLON OF COOLANT CAPACITY	ARCTIC GRADE ANTIFREEZE -90°F (-68°C) MIL-A-11755
°F	°C		
+20	-7	1-1/2 (.71 L)	**CAUTION**
+10	-12	2 (.95 L)	
0	-18	2-3/4 (1.3 L)	
-10	-23	3-1/4 (1.5 L)	Freezing point of -90°F (-68°C). Issued ready for use and must not be mixed with any other liquid.
-20	-29	3-1/2 (1.7 L)	
-30	-34	4 (1.9 L)	
-40	-40	4-1/4 (2.0 L)	
-50	-46	4-1/2 (2.1 L)	
-55	-48	4-3/4 (2.2 L)	
Below -60	Below -51.1	Use arctic grade antifreeze -90°F (-68°C)	

FOLLOW-ON TASKS: • Start engine (TM 9-2320-387-10) and check cooling system for leaks.
• Lower and secure hood (TM 9-2320-387-10).

3-62. RADIATOR AND FAN SHROUD ASSEMBLY MAINTENANCE (Cont'd)

This task covers:

a. Removal
b. Cleaning and Inspection
c. Installation

INITIAL SETUP:

Tools
General mechanic's tool kit:
automotive (Appendix B, Item 1)
Maintenance and repair shop equipment:
automotive (Appendix B, Item 2)

Materials/Parts
Locknut (Appendix G, Item 92)
Four locknuts (Appendix G, Item 77)
Six locknuts (Appendix G, Item 106)
Eight lockwashers (Appendix G, Item 146)

Personnel Required
One mechanic
One assistant

Manual References
TM 9-2320-387-24P

Equipment Condition
- Cooling system drained (para. 3-61).
- Oil cooler removed (para. 3-8).
- Hood removed (para. 10-9).

General Safety Instructions
Compressed air used for cleaning purposes will not exceed 30 psi (207 kPa).

Maintenance Level
Unit

CAUTION

Do not bend radiator fins. Damaged fins reduce cooling efficiency, which may damage engine.

a. Removal

NOTE

The radiator and fan shroud are removed as a unit.

1. Loosen clamp (2) and disconnect radiator inlet hose (1) from radiator (3).
2. Loosen clamp (5) and disconnect surge tank-to-radiator vent hose (4) from adapter (6).
3. Disconnect control valve hose (14) from elbow (16).
4. Disconnect fan drive hose (17) from fan drive (18).
5. Disconnect elbow (16) from shroud bulkhead adapter (15).
6. Remove clamp (9) and lower radiator front hose (10) from radiator (3).
7. Remove locknut (27), washer (28), capscrew (34), washer (33), washer (32), lower mount (30), and large washer (29) from radiator (3) and frame bracket (31). Discard locknut (27).
8. Remove four locknuts (11), washers (12), and capscrews (13) from two support brackets (8) and airlift brackets (7). Discard locknuts (11).
9. Loosen nut (26) and release tension from cross brace (23).
10. Remove four locknuts (25), washers (24), capscrews (36), and crossbrace (23) from airlift brackets (7). Discard four locknuts (25).
11. Lift radiator (3) up and remove from vehicle.
12. Remove eight capscrews (35), lockwashers (37), two retaining strips (38), and fan shroud (39) from radiator (3). Discard lockwashers (37).
13. Remove two locknuts (19), large washers (20), bracket (40) (left side), brackets (21), support brackets (8), and insulators (22) from radiator studs (22.1). Discard locknuts (19).

3-62. RADIATOR AND FAN SHROUD ASSEMBLY MAINTENANCE (Cont'd)

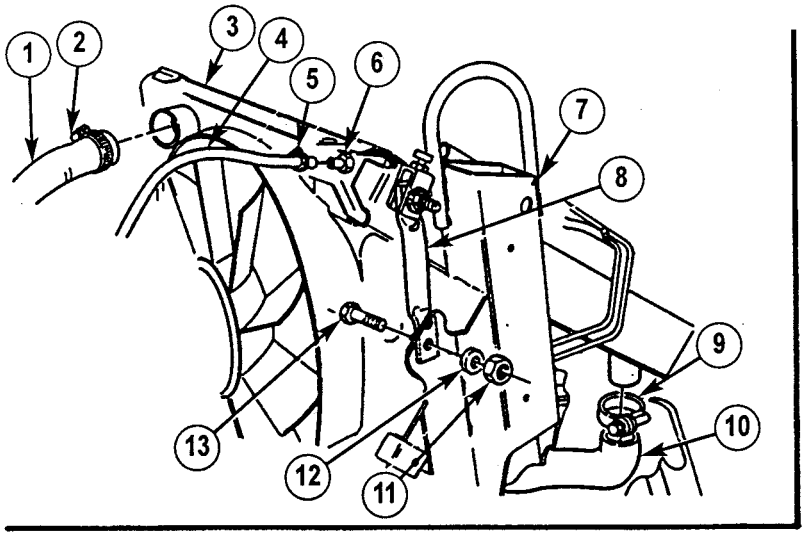

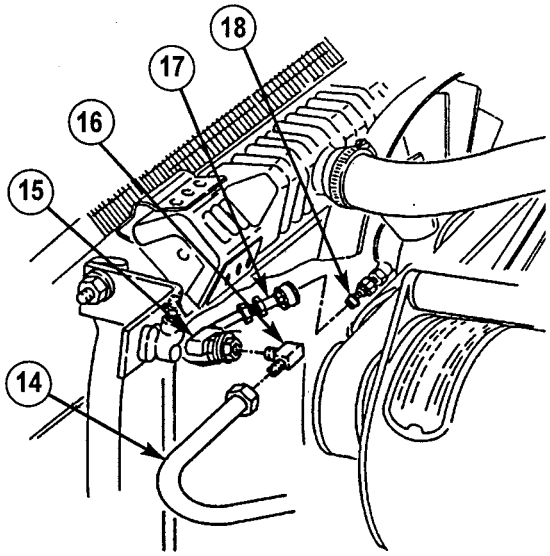

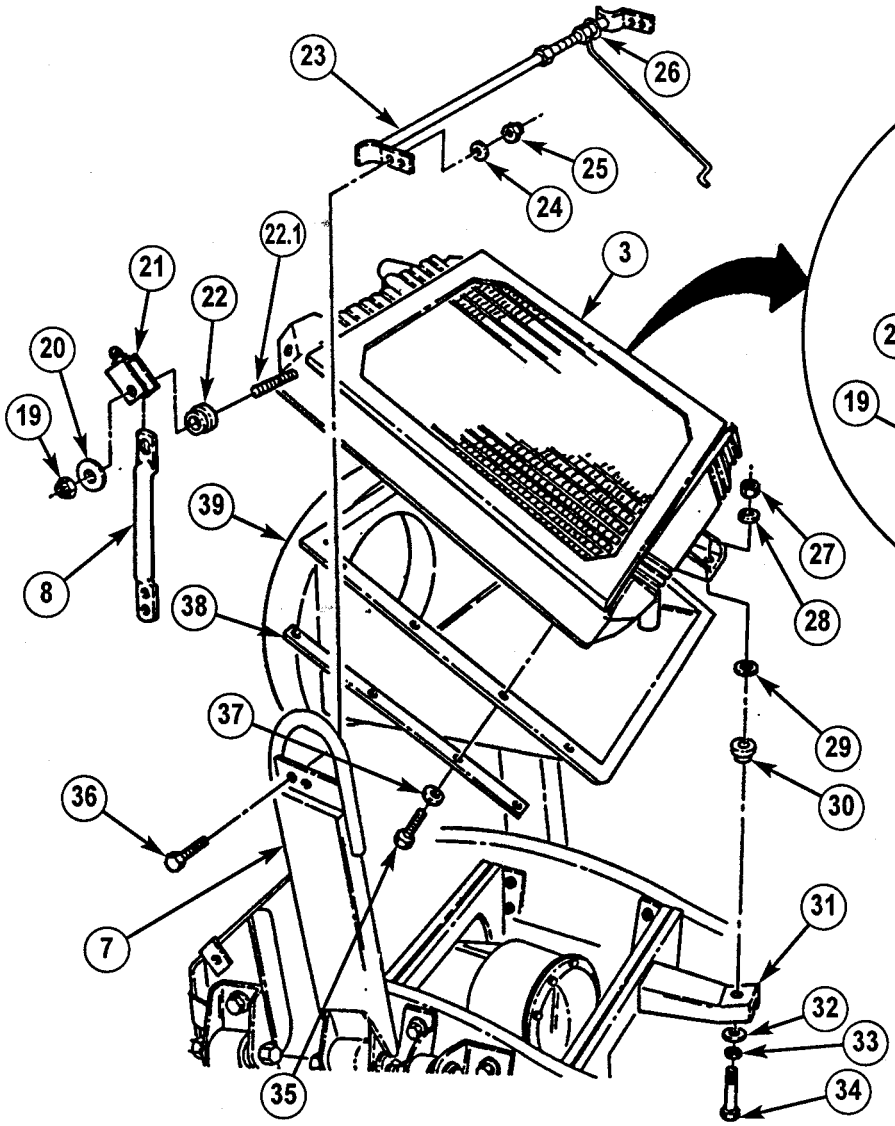

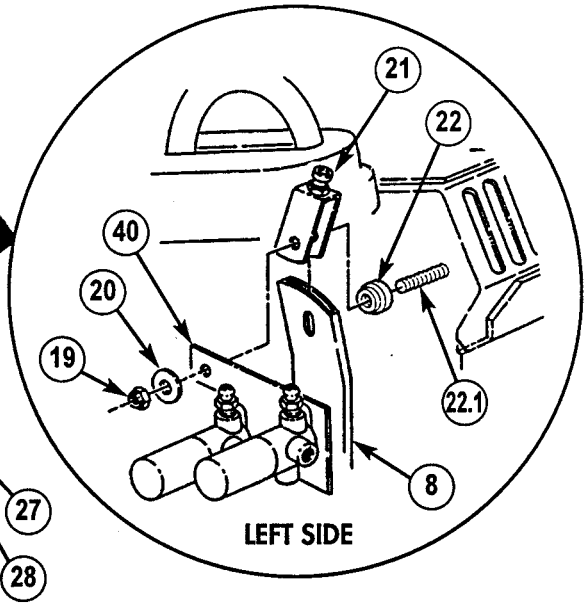

3-62. RADIATOR AND FAN SHROUD ASSEMBLY MAINTENANCE (Cont'd)

b. Cleaning and Inspection

WARNING

Compressed air used for cleaning purposes will not exceed 30 psi (207 kPa). Use only with effective chip guarding and personal protective equipment (goggles/shield, gloves, etc.).

1. Remove dirt, trash, and insects embedded in radiator fins using water and compressed air.
2. Inspect radiator adapter (25) for damage. Replace adapter (25) if damaged.
3. Inspect radiator (9) for breaks, punctures, cracks, and splits. Replace radiator (9) if broken, punctured, cracked, or split.
4. Inspect shroud bulkhead adapter (26) for damage. Replace bulkhead adapter (26) if damaged.
5. Inspect fan shroud (21) for cracks, splits, and breaks. Repair fan shroud (21) if cracked, split, or broken. Replace fan shroud (21) if damaged beyond repair.
6. Inspect fan drive hose (27) for cracks or damage. Replace if cracked or damaged.

c. Installation

CAUTION

To ensure proper cooling of engine, upper edge of shroud must align with radiator top tank seam or damage to equipment may result.

1. Install fan shroud (21) on radiator (9), with shroud edge (22) aligning with tank seam (23), with two retaining strips (20), eight lockwashers (17), and capscrews (18). Tighten capscrews (18) to 6 lb-ft (8 N·m).
2. Install two brackets (3), insulators (4), support brackets (24), and bracket (28) (left side), on radiator stud (4.1) with two large washers (2) and new locknuts (1). Tighten locknuts (1) to 20 lb-ft (27 N·m).
3. Install radiator (9) on frame bracket (14), aligning two support brackets (24) to airlift brackets (29).
4. Install support brackets (24) on airlift brackets (29) with four capscrews (32), washers (31), and locknuts (30). Do not tighten locknuts (30).
5. Install radiator (9), large washer (12), and mount (13) on frame bracket (14) with washer (11), washer (15), capscrew (16), washer (11), and locknut (10). Do not tighten capscrew (16).
6. Install crossbrace (5) on airlift brackets (29) with four capscrews (19), washers (6), and locknuts (7).
7. Tighten nut (8) on crossbrace (5) until slack is removed.

3-62. RADIATOR AND FAN SHROUD ASSEMBLY MAINTENANCE (Cont'd)

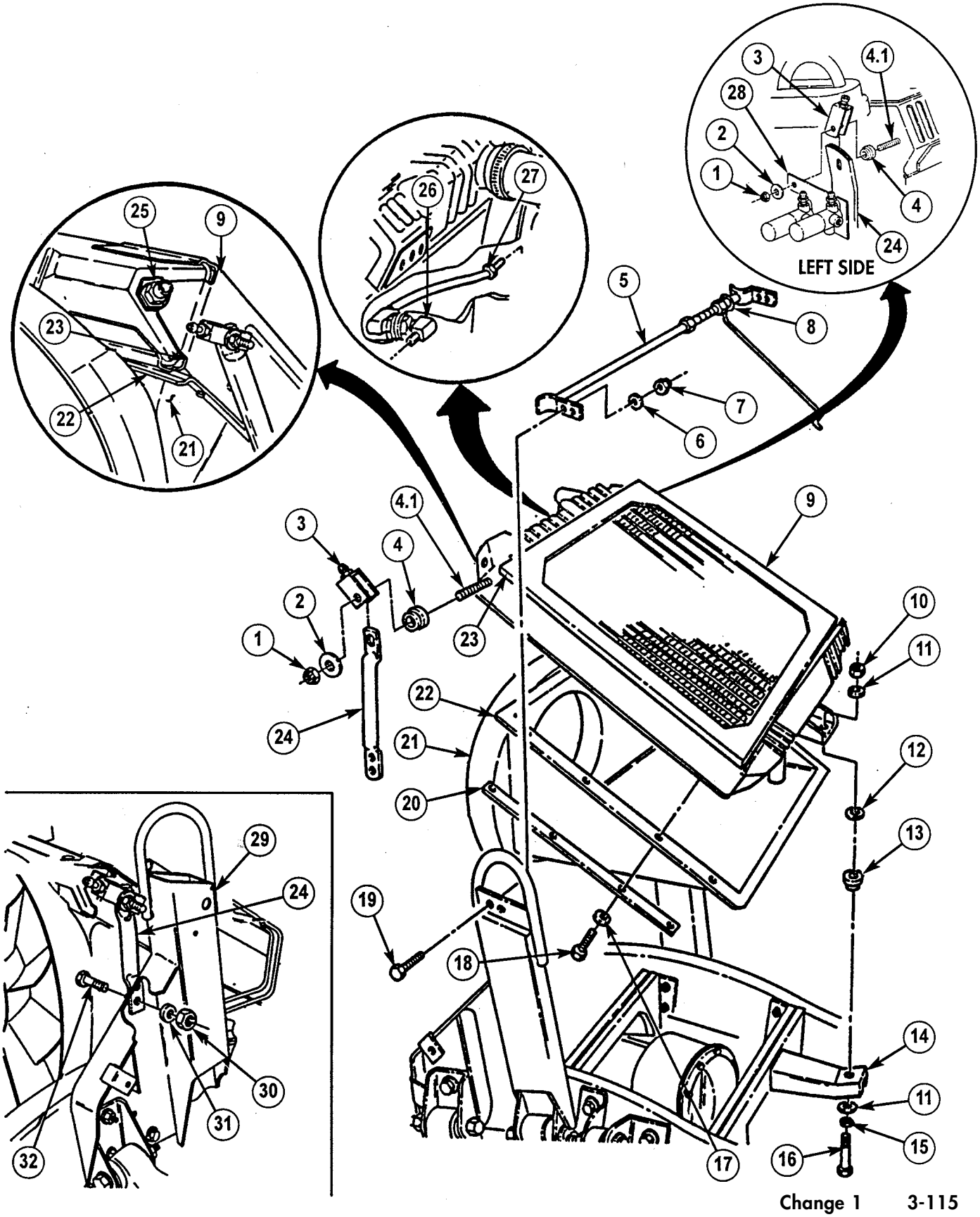

3-62. RADIATOR AND FAN SHROUD ASSEMBLY MAINTENANCE (Cont'd)

NOTE

- Fan shroud should be aligned so the following dimensions are maintained. Adjustments may be made by sliding the radiator/shroud assembly. Distance A from the edge of shroud ring and rear edge of fan must be 1-1/2 ± 1/4 in. (38.1 ± 6 mm). Measure distance A at the 2, 4, 8, and 10 o'clock positions.
- Fan blade to fan shroud clearance, distance between the top of the fan blade and fan shroud, must not be less than 1/4 in. (6 mm) at any position.

8. Align fan shroud (11) and tighten four locknuts (10) to 26 lb-ft (35 N·m). Tighten capscrew (7) to 30 lb-ft (41 N·m).
9. Connect lower radiator front hose (9) to radiator (3) and tighten clamp (8) to 85-95 lb-in (9.6-10.7 N·m).
10. Connect fan drive hose (15) to fan drive (16).
11. Connect elbow (14) to bulkhead adapter (13).
12. Connect control valve hose (12) to elbow (14).
13. Connect radiator inlet hose (1) to radiator (3) and tighten clamp (2) to 85-95 lb-in (9.6-10.7 N·m).
14. Connect surge tank-to-radiator vent hose (4) to adapter (6) and tighten clamp (5) to 10-20 lb-in (1-2 N·m).

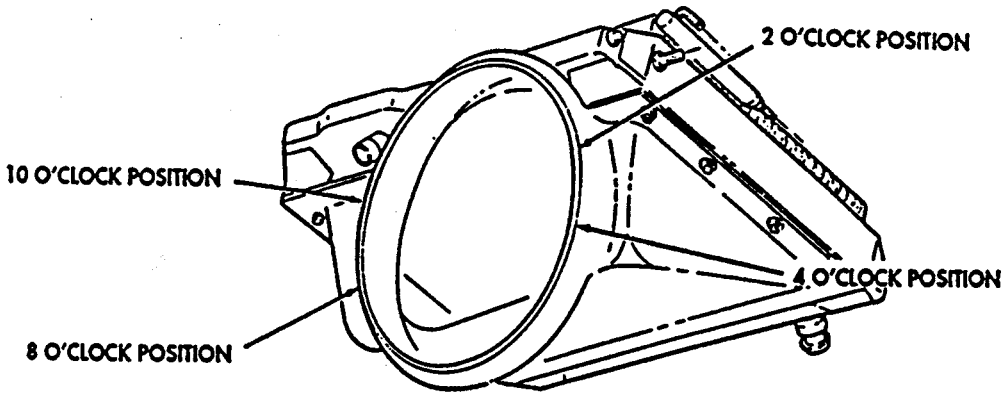

3-62. RADIATOR AND FAN SHROUD ASSEMBLY MAINTENANCE (Cont'd)

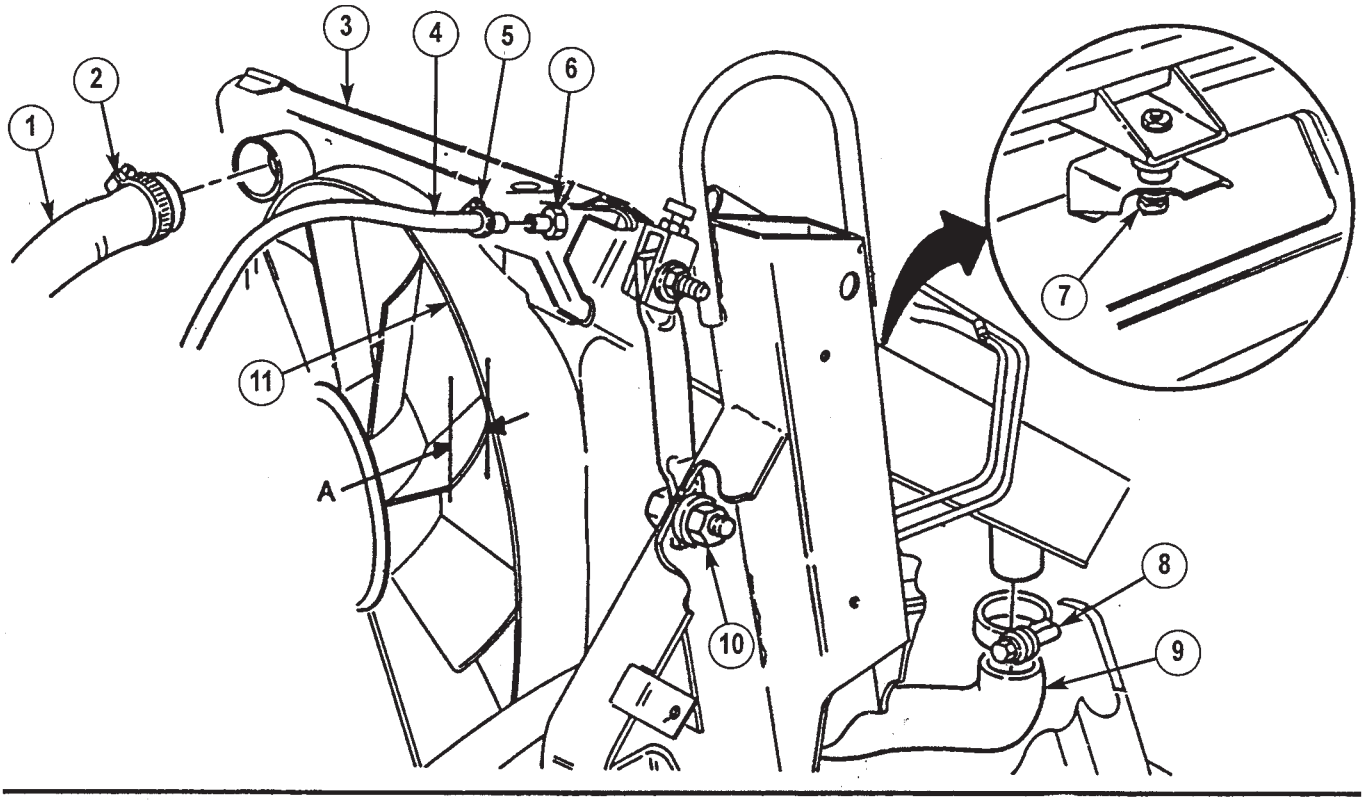

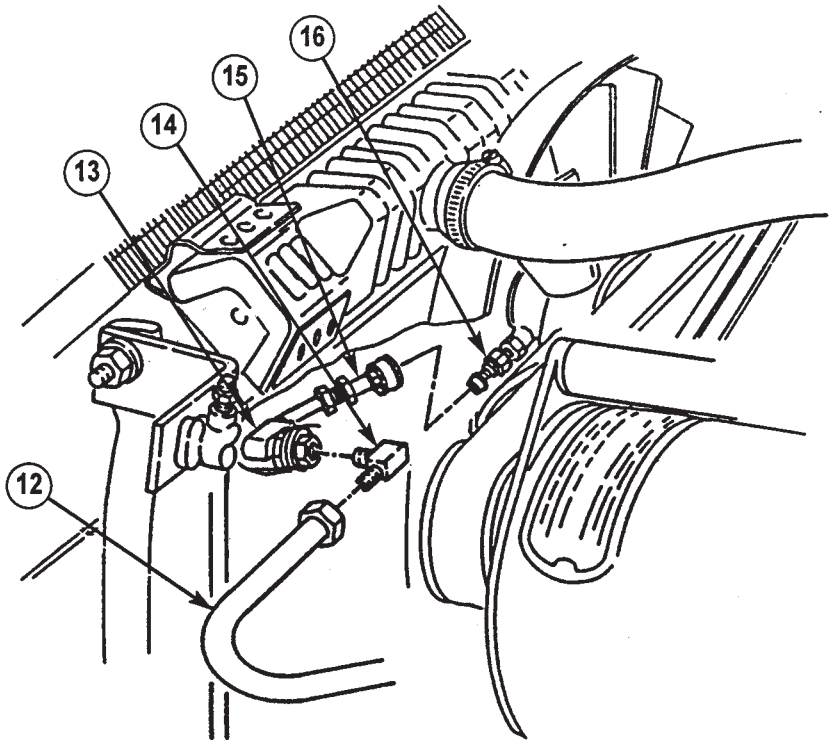

FOLLOW-ON TASKS:
- Fill cooling system (para. 3-61).
- Install oil cooler (para. 3-8).
- Bleed power steering system (para. 8-27).
- Install hood (para. 10-9).

3-63. AIRLIFT-TO-SHROUD SHIELD ASSEMBLY REPLACEMENT

This task covers:

a. Removal **b. Installation**

INITIAL SETUP:

Tools
General mechanic's tool kit: automotive (Appendix B, Item 1)

Manual References
TM 9-2320-387-24P

Equipment Condition
Radiator and fan shroud removed (para. 3-62).

Maintenance Level
Unit

a. Removal

Remove three screws (3) and shield assembly (2) from airlift bracket (1).

b. Installation

Install shield assembly (2) on airlift bracket (1) with three screws (3).

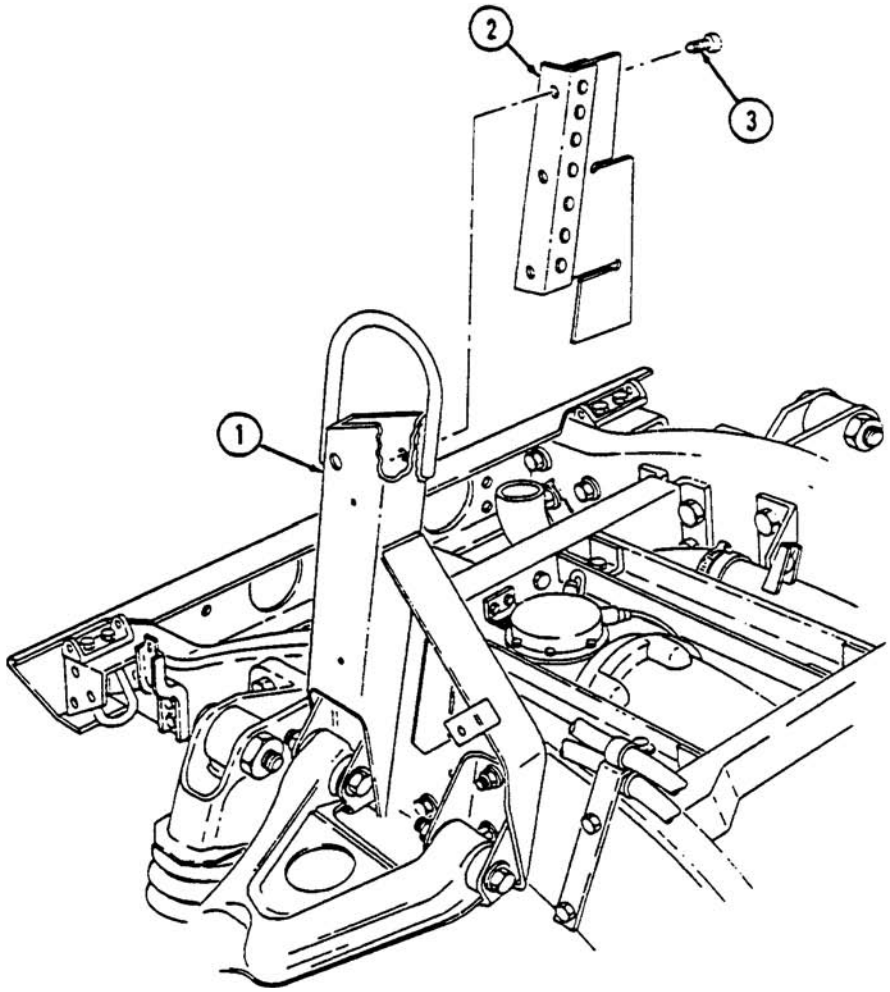

FOLLOW-ON TASK: Install radiator and fan shroud (para. 3-62).

3-64. RADIATOR SUPPORTS REPLACEMENT

This task covers:

a. Removal **b. Installation**

INITIAL SETUP:

Tools

General mechanic's tool kit:
automotive (Appendix B, Item 1)
Maintenance and repair shop equipment:
automotive (Appendix B, Item 2)

Materials/Parts

Six locknuts (Appendix G, Item 106)

Manual References

TM 9-2320-387-24P

Equipment Condition

- Left splash shield removed (para. 10-23).
- Right splash shield removed (para. 10-24).

Maintenance Level

Unit

a. Removal

1. Remove two locknuts (1), large washers (2), bracket (3) (left side), brackets (4), support brackets (7), and insulators (6) from radiator studs (5). Discard locknuts (1).
2. Remove four locknuts (11), washers (9), capscrews (8), and two support brackets (7) from airlift brackets (10). Discard locknuts (11).

b. Installation

1. Install two support brackets (7) on airlift brackets (10) with four capscrews (8), washers (9), and locknuts (11). Do not tighten locknuts (11).
2. Install two brackets (4), insulators (6), support brackets (7), and bracket (3) (left side) on two radiator studs (5) with large washers (2) and locknuts (1). Tighten locknuts (1) to 20 lb-ft (27 N•m).
3. Tighten four locknuts (11) to 26 lb-ft (35 N•m).

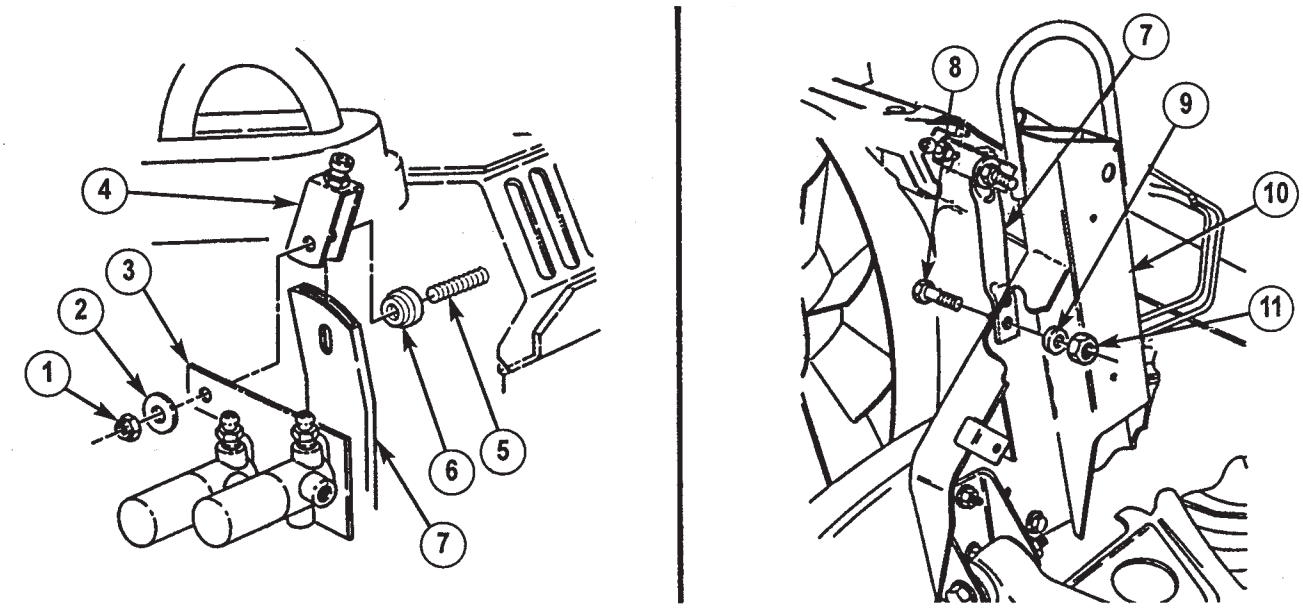

FOLLOW-ON TASKS: • Install left splash shield (para. 10-23).
• Install right splash shield (para. 10-24).

3-65. SURGE TANK REPLACEMENT

This task covers:

a. Removal **b. Installation**

INITIAL SETUP:

Tools
General mechanic's tool kit:
automotive (Appendix B, Item 1)
Maintenace and repair shop equipment:
automotive (Appendix B, Item 2)

Manual References
TM 9-2320-387-24P

Equipment Condition
Cooling system drained, as required (para. 3-61).

Maintenance Level
Unit

NOTE

Tag hoses prior to disconnection.

a. Removal

1. Loosen clamp (3) and disconnect surge tank-to-radiator vent hose (6) from surge tank (2).
2. Loosen clamp (4) and disconnect surge tank-to-water crossover vent hose (5) from surge tank (2).
3. Loosen clamp (9) and disconnect surge tank-to-lower radiator hose (8) from surge tank (2).
4. Open two clamps (1) on surge tank (2) and bracket (10).
5. Disconnect surge tank overflow hose (7) and remove surge tank (2) from bracket (10).

b. Installation

1. Install surge tank (2) on bracket (10) with two clamps (1).
2. Connect surge tank-to-lower radiator hose (8) to surge tank (2) and tighten clamp (9).
3. Connect surge tank-to-water crossover vent hose (5) to surge tank (2) and tighten clamp (4) to 10-20 lb-in. (1-2 N·m).
4. Connect surge tank-to-radiator vent hose (6) to surge tank (2) and tighten clamp (3) to 10-20 lb-in. (1-2 N·m).
5. Connect surge tank overflow hose (7) to surge tank (2).

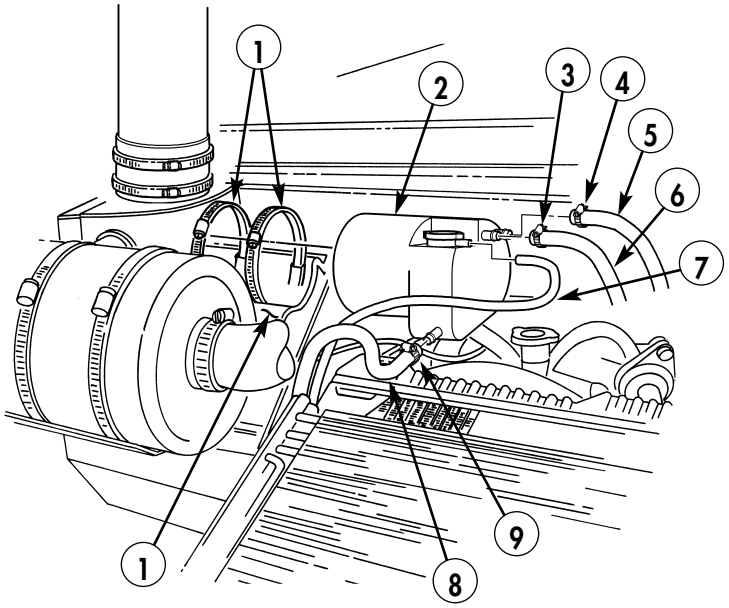

FOLLOW-ON TASK: Fill cooling system (para. 3-61).

3-66. SURGE TANK-TO-RADIATOR VENT HOSE REPLACEMENT

This task covers:

a. Removal **b. Installation**

INITIAL SETUP:

Tools
General mechanic's tool kit:
automotive (Appendix B, Item 1)
Maintenance and repair shop equipment:
automotive (Appendix B, Item 2)

Manual References
TM 9-2320-387-24P

Equipment Condition
Cooling system depressurized (para. 3-61).

Maintenance Level
Unit

a. Removal

1. Loosen two clamps (2) and remove vent hose (3) from radiator (4) and surge tank (1).
2. Remove two clamps (2) from vent hose (3).

b. Installation

1. Install two clamps (2) on vent hose (3).
2. Install vent hose (3) on surge tank (1) and radiator (4) and tighten two clamps (2) to 10-20 lb-in. (1-2 N·m).

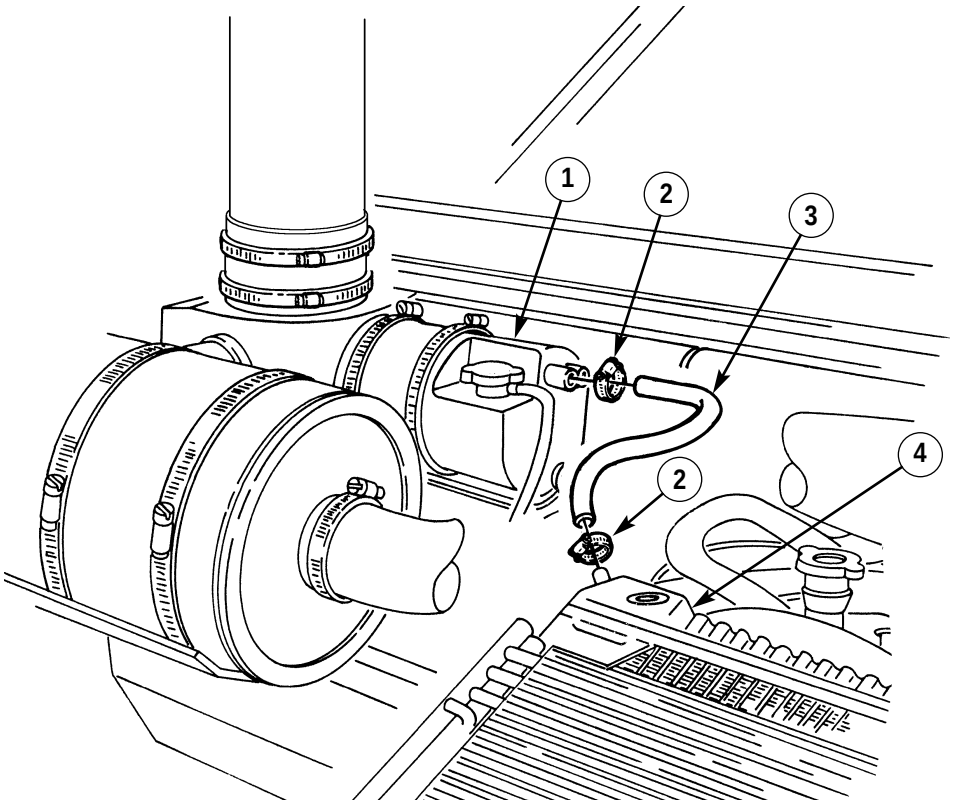

FOLLOW-ON TASK: Tighten coolant filler cap (para. 3-61).

3-67. SURGE TANK-TO-WATER CROSSOVER VENT HOSE REPLACEMENT

This task covers:

a. Removal **b. Installation**

INITIAL SETUP:

Tools

General mechanic's tool kit: automotive (Appendix B, Item 1)

Maintenance and repair shop equipment: automotive (Appendix B, Item 2)

Manual References

TM 9-2320-387-24P

Equipment Condition

Cooling system depressurized (para. 3-61).

Maintenance Level

Unit

a. Removal

1. Loosen two clamps (2) and remove vent hose (3) from water crossover (4) and surge tank (1).
2. Remove two clamps (2) from vent hose (3).

b. Installation

1. Install two clamps (2) on vent hose (3).
2. Install vent hose (3) on surge tank (1) and water crossover (4) and tighten two clamps (2) to 10-20 lb-in. (1-2 N·m).

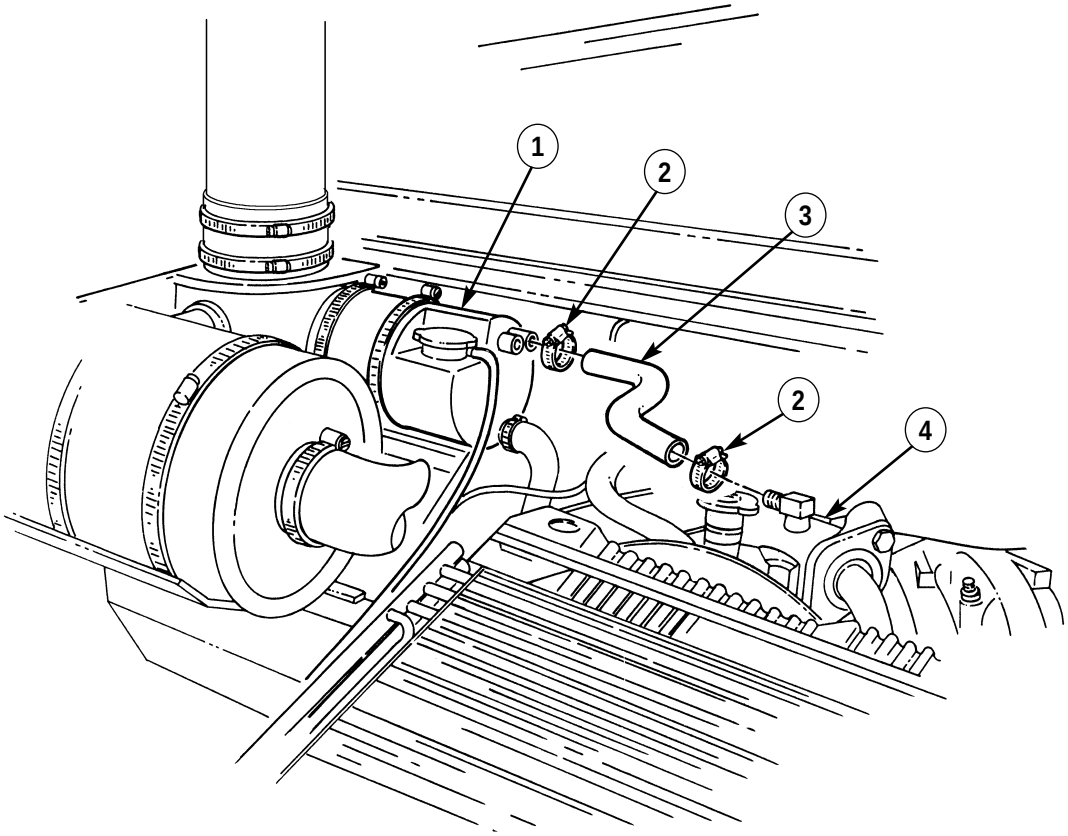

FOLLOW-ON TASK: Tighten coolant filler cap (para. 3-61).

3-68. THERMOSTAT BYPASS HOSE REPLACEMENT

This task covers:

a. Removal **b. Installation**

INITIAL SETUP:

Tools
General mechanic's tool kit: automotive (Appendix B, Item 1)

Manual References
TM 9-2320-387-24P

Equipment Condition
Cooling system drained, as required (para. 3-61).

Maintenance Level
Unit

a. Removal

1. Loosen two clamps (2) and remove thermostat bypass hose (3) from water pump (4) and water crossover (1).
2. Remove two clamps (2) from hose (3).

b. Installation

1. Install two clamps (2) on thermostat bypass hose (3).
2. Install hose (3) on water pump (4) and water crossover (1) and tighten two clamps (2).

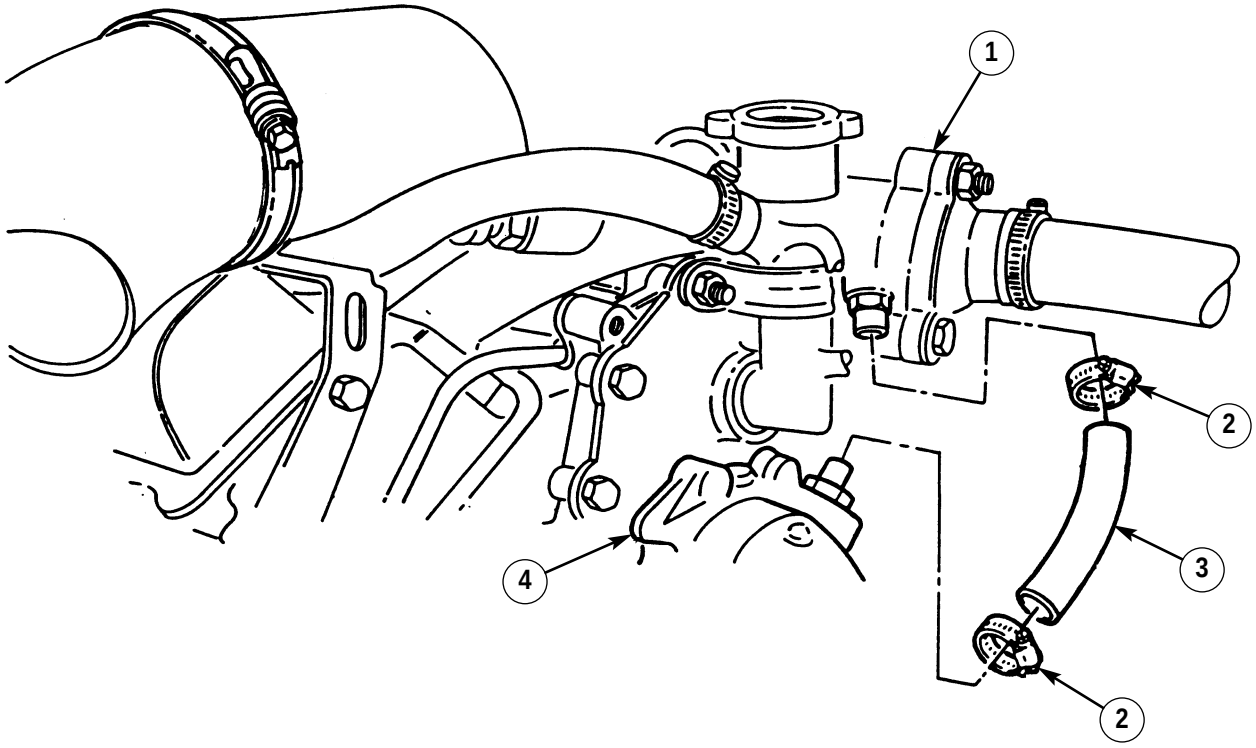

FOLLOW-ON TASK: Fill cooling system (para. 3-61).

3-69. FAN DRIVE HOSE AND QUICK-DISCONNECT REPLACEMENT

This task covers:

a. Removal **b. Installation**

INITIAL SETUP:

Tools
General mechanic's tool kit:
automotive (Appendix B, Item 1)

Material/Parts
Sealing compound (Appendix C, Item 60)

Personnel Required
One mechanic
One assistant

Manual References
TM 9-2320-387-10
TM 9-2320-387-24P

Equipment Condition
Hood raised and secured (TM 9-2320-387-10).

Maintenance Level
Unit

a. Removal

NOTE

Have container ready to catch fluid.

1. Remove control valve hose (9) from elbow (5).
2. Remove elbow (5) from bulkhead adapter bushing (8).
3. Remove nut (6), washer (7), and bulkhead adapter bushing (8) with bulkhead adapter (11) from shroud (4).
4. Release fan drive hose quick-disconnect (2) and remove hose (1) from fan drive (3).
5. Remove bulkhead adapter bushing (8) from bulkhead adapter (11).
6. Remove bulkhead adapter (11) from fan drive hose (1).
7. Remove female end of quick-disconnect (2) from fan drive hose (1).
8. Remove male end of quick-disconnect (12) from fan drive (3).

b. Installation

NOTE

Apply sealing compound to all pipe threads during installation.

1. Install male end of quick-disconnect (12) on fan drive (3).
2. Install female end of quick-disconnect (2) on fan drive hose (1).
3. Install bulkhead adapter (11) on fan drive hose (1).
4. Install bulkhead adapter bushing (8) on bulkhead adapter (11).
5. Install bulkhead adapter (11) and bulkhead adapter bushing (8) on shroud (4) with washer (7) and nut (6).
6. Install hose (1) and fan drive hose quick-disconnect (2) on fan drive (3).
7. Install elbow (5) on bulkhead adapter bushing (8).
8. Install control valve hose (9) on elbow (5).

3-69. FAN DRIVE HOSE AND QUICK-DISCONNECT REPLACEMENT (Cont'd)

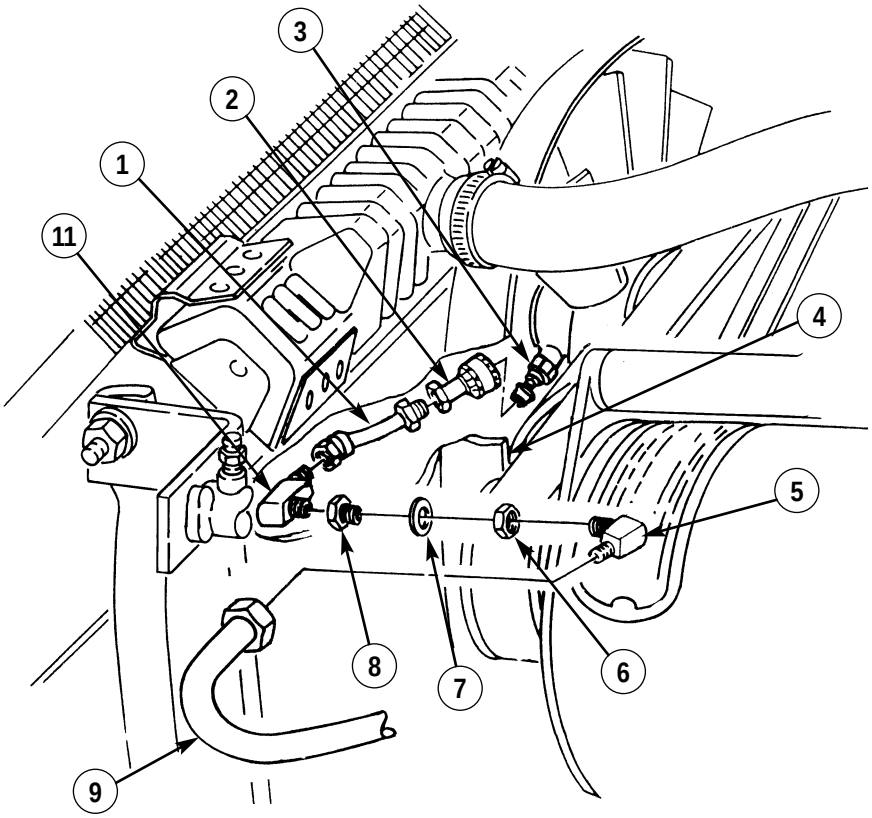

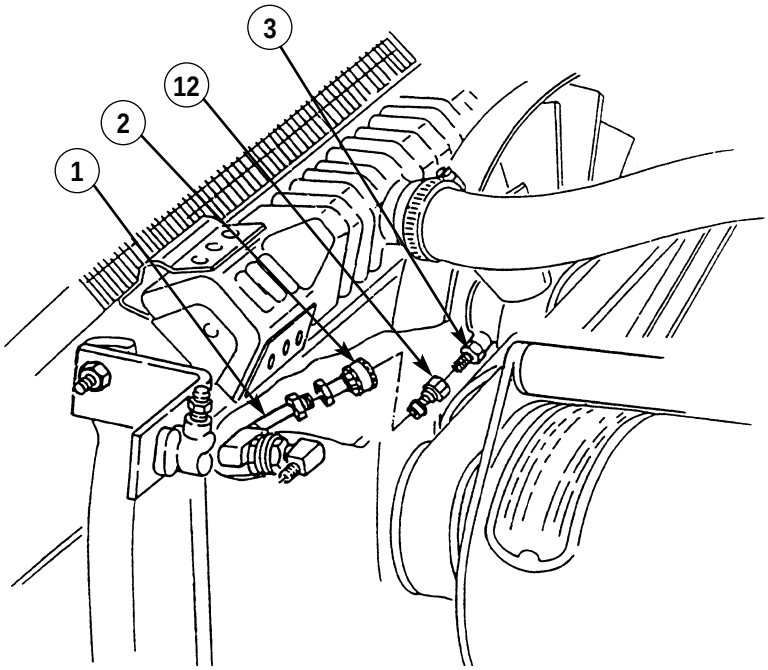

FOLLOW-ON TASK: Lower and secure hood (TM 9-2320-387-10).

3-70. RADIATOR INLET HOSE REPLACEMENT

This task covers:

a. Removal **b. Installation**

INITIAL SETUP:

Tools
General mechanic's tool kit:
automotive (Appendix B, Item 1)
Maintenance and repair shop equipment:
automotive (Appendix B, Item 2)

Manual References
TM 9-2320-387-24P

Equipment Condition
Cooling system depressurized (para. 3-61).

Maintenance Level
Unit

a. Removal

1. Loosen two clamps (2) and remove inlet hose (3) from radiator (1) and water crossover (4).
2. Remove two clamps (2) from hose (3).

b. Installation

1. Install two clamps (2) on inlet hose (3).
2. Install hose (3) on water crossover (4) and radiator (1) and tighten two clamps (2) to 85-95 lb-in. (10-11 N·m).

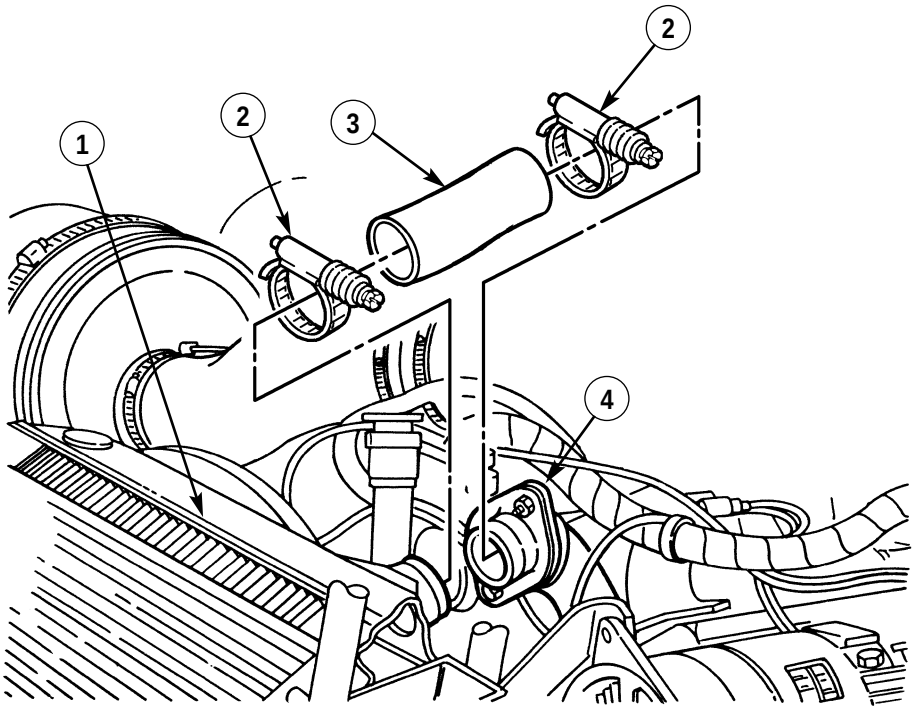

FOLLOW-ON TASK: Tighten coolant filler cap (para. 3-61).

3-71. RADIATOR LOWER TUBE ASSEMBLY REPLACEMENT

This task covers:

a. Removal

b. Installation

INITIAL SETUP:

Tools

General mechanic's tool kit: automotive (Appendix B, Item 1)
Maintenance and repair shop equipment: automotive (Appendix B, Item 2)

Materials/Parts

Two locknuts (Appendix G, Item 77)
Tape (Appendix C, Item 77)

Manual References

TM 9-2320-387-24P

Equipment Condition

Cooling system drained (para. 3-61).

Maintenance Level

Unit

a. Removal

1. Remove drainvalve (11) from radiator lower tube assembly (10).
2. Remove two locknuts (5), washers (3), capscrews (2), and washers (3) from radiator lower tube assembly (10) and frame bracket (4). Discard locknuts (5).
3. Loosen clamp (7) and disconnect water pump inlet hose (6) from radiator lower tube assembly (10).
4. Loosen clamp (8) and disconnect surge tank-to-lower radiator hose (9) from radiator lower tube assembly (10).
5. Loosen clamp (12) and disconnect lower radiator hose (1) from radiator lower tube assembly (10).
6. Remove radiator lower tube assembly (10).

b. Installation

1. Install radiator lower tube assembly (10) on frame bracket (4) with two washers (3), capscrews (2), washers (3), and locknuts (5). Tighten locknuts (5) to 6 lb-ft (8 N·m).
2. Connect lower radiator hose (6) to radiator lower tube assembly (10) and tighten clamp (7) to 85-95 lb-in. (10-11 N·m).
3. Connect surge tank-to-lower radiator hose (9) to radiator lower tube assembly (10) and tighten clamp (8) to 85-95 lb-in. (10-11 N·m).
4. Connect water pump inlet hose (1) to radiator lower tube assembly (10) and tighten clamp (12) to 85-95 lb-in. (10-11 N·m).
5. Apply sealant-type tape to threads of drainvalve (11) and install drainvalve (11) on radiator lower tube assembly (10).

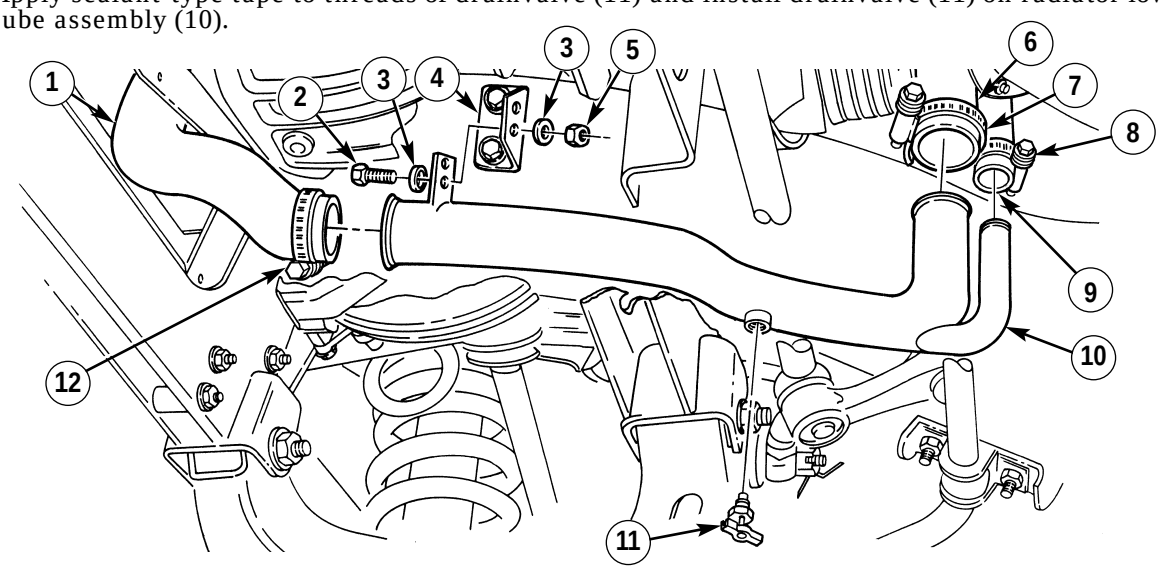

FOLLOW-ON TASK: Fill cooling system (para. 3-61).

3-72. LOWER RADIATOR HOSE REPLACEMENT

This task covers:

a. Removal **b. Installation**

INITIAL SETUP:

Tools
General mechanic's tool kit: automotive (Appendix B, Item 1)
Maintenance and repair shop equipment: automotive (Appendix B, Item 2)

Manual References
TM 9-2320-387-24P

Equipment Condition
Cooling system drained (para. 3-61).

Maintenance Level
Unit

a. Removal

1. Loosen two clamps (2) and remove lower radiator hose (3) from radiator (1) and lower tube assembly (4).
2. Remove two clamps (2) from hose (3).

b. Installation

1. Install two clamps (2) on lower radiator hose (3).
2. Install hose (3) on lower tube assembly (4) and radiator (1) and tighten two clamps (2) to 85-95 lb-in. (10-11 N·m).

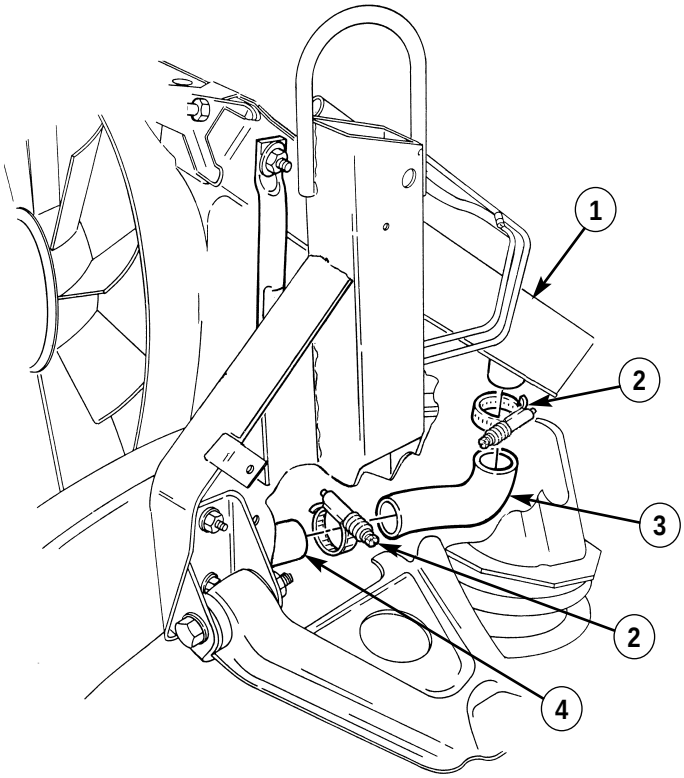

FOLLOW-ON TASK: Fill cooling system (para. 3-61).

3-73. WATER PUMP INLET HOSE REPLACEMENT

This task covers:

a. Removal **b. Installation**

INITIAL SETUP:

Tools

General mechanic's tool kit: automotive (Appendix B, Item 1)

Manual References

TM 9-2320-387-24P

Equipment Condition

Cooling system drained (para. 3-61).

Maintenance Level

Unit

a. Removal

1. Loosen two clamps (2) and remove water pump inlet hose (3) from water pump (1) and lower tube assembly (4).
2. Remove two clamps (2) from hose (3).

b. Installation

1. Install two clamps (2) on water pump inlet hose (3).
2. Install hose (3) on lower tube assembly (4) and water pump (1) and tighten two clamps (2) to 90-125 lb-in. (10-14 N·m).

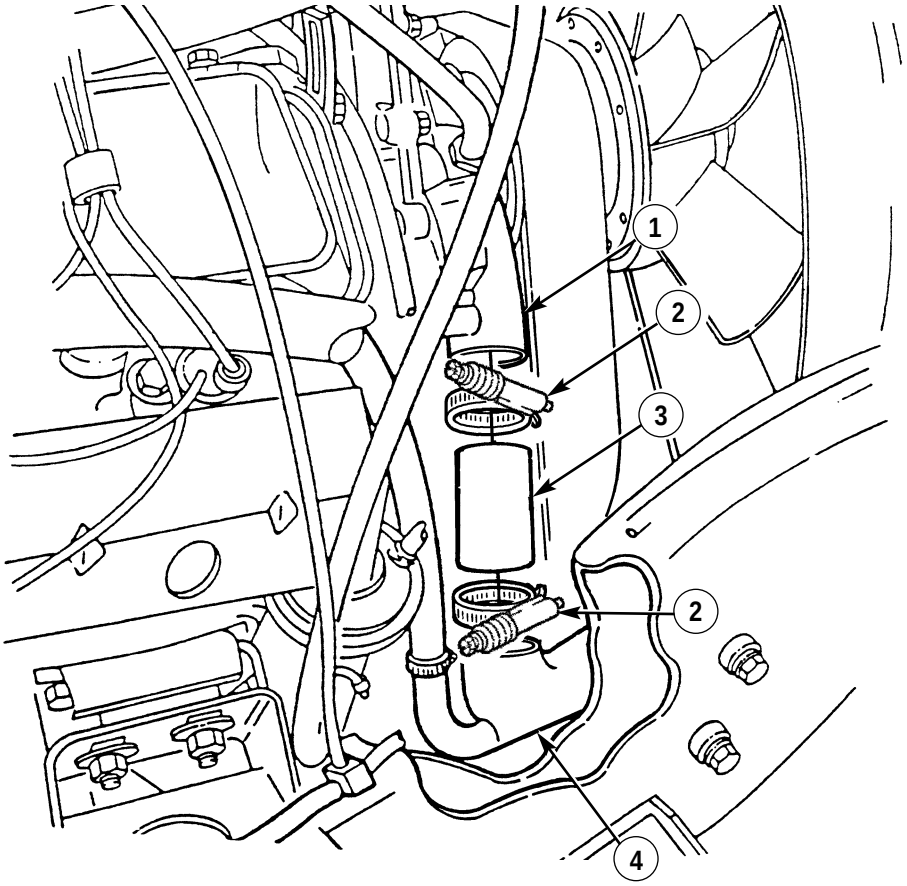

FOLLOW-ON TASK: Fill cooling system (para. 3-61).

3-74. SURGE TANK-TO-LOWER RADIATOR TUBE HOSE REPLACEMENT

This task covers:

a. Removal **b. Installation**

INITIAL SETUP:

Tools
General mechanic's tool kit: automotive (Appendix B, Item 1)

Manual References
TM 9-2320-387-24P

Equipment Condition
Cooling system drained (para. 3-61).

Maintenance Level
Unit

a. Removal

1. Loosen two clamps (2) and remove hose (3) from surge tank (1) and tube assembly (4).
2. Remove two clamps (2) from hose (3).

b. Installation

1. Install two clamps (2) on hose (3).
2. Install hose (3) on surge tank (1) and tube assembly (4) and tighten two clamps (2).

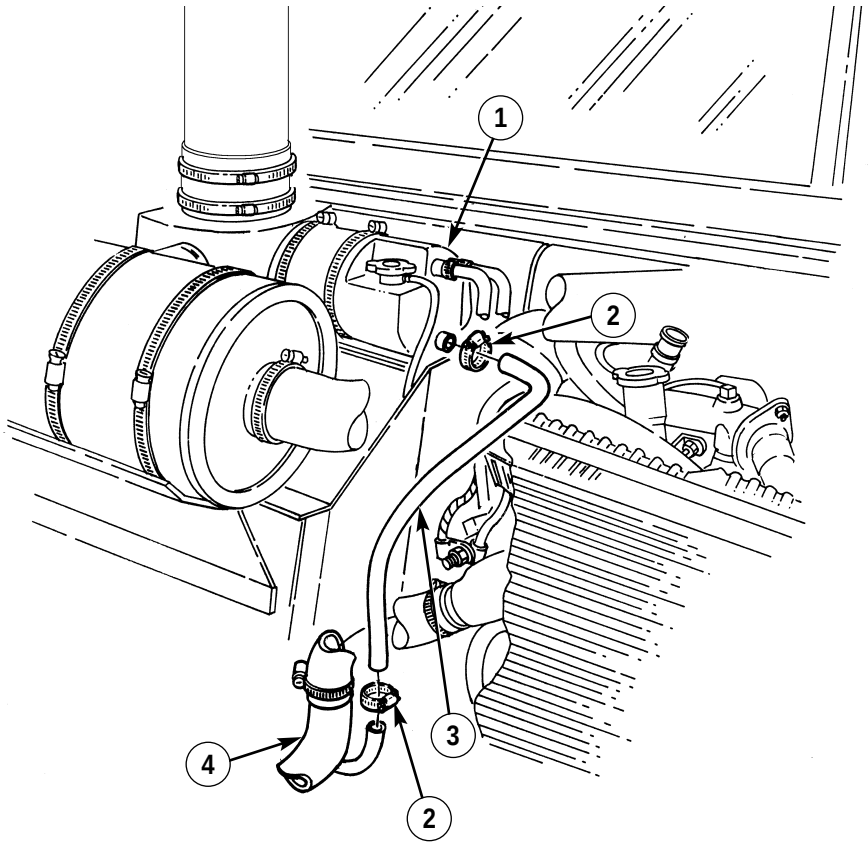

FOLLOW-ON TASK: Fill cooling system (para. 3-61).

3-75. SURGE TANK OVERFLOW HOSE REPLACEMENT

This task covers:

a. Removal **b. Installation**

INITIAL SETUP:

Tools
General mechanic's tool kit: automotive (Appendix B, Item 1)

Manual References
TM 9-2320-387-10
TM 9-2320-387-24P

Equipment Condition
Hood raised and secured (TM 9-2320-387-10).

Maintenance Level
Unit

a. Removal

1. Remove overflow hose (2) from surge tank filler neck (1).
2. Loosen clamp (3) and remove hose (2) from body (4).

b. Installation

1. Connect overflow hose (2) to surge tank filler neck (1).
2. Install hose (2) on body (4) and tighten clamp (3).

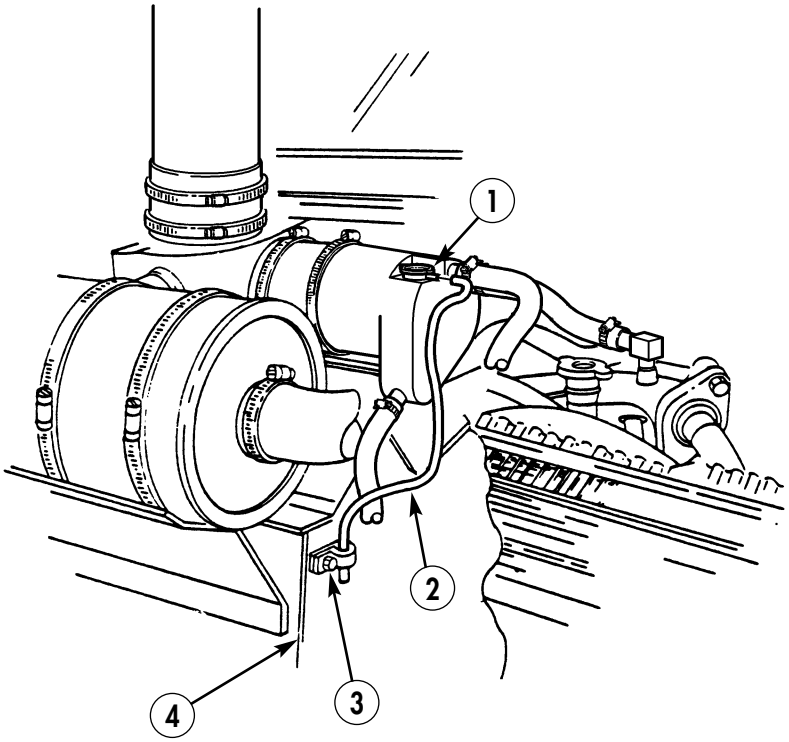

FOLLOW-ON TASK: Lower and secure hood (TM 9-2320-387-10).

3-76. THERMOSTAT REPLACEMENT

This task covers:

a. Removal **b. Installation**

INITIAL SETUP:

Tools
General mechanic's tool kit: automotive (Appendix B, Item 1)
Maintenance and repair shop equipment: automotive (Appendix B, Item 2)

Materials/Parts
Gasket (Appendix G, Item 41)
Sealing compound (Appendix C, Item 61)

Manual References
TM 9-2320-387-24P

Equipment Condition
Cooling system drained, as required (para. 3-61).

Maintenance Level
Unit

a. Removal

1. Remove capscrew (5), stud (4), thermostat housing (3), thermostat (2), and gasket (6) from water crossover (1). Discard gasket (6).
2. Clean gasket surface on water crossover (1) and thermostat housing (3).

b. Installation

1. Install thermostat (2) into water crossover (1), ensuring valve sensor (7) points toward crossover (1).
2. Position gasket (6) on thermostat housing (3). Apply sealing compound to fastener threads and insert capscrew (5) and stud (4) to align gasket (6).
3. Install thermostat housing (3) over thermostat (2) and on water crossover (1) with capscrew (5) and stud (4). Tighten capscrew (5) and stud (4) to 25 lb-ft (34 N·m).

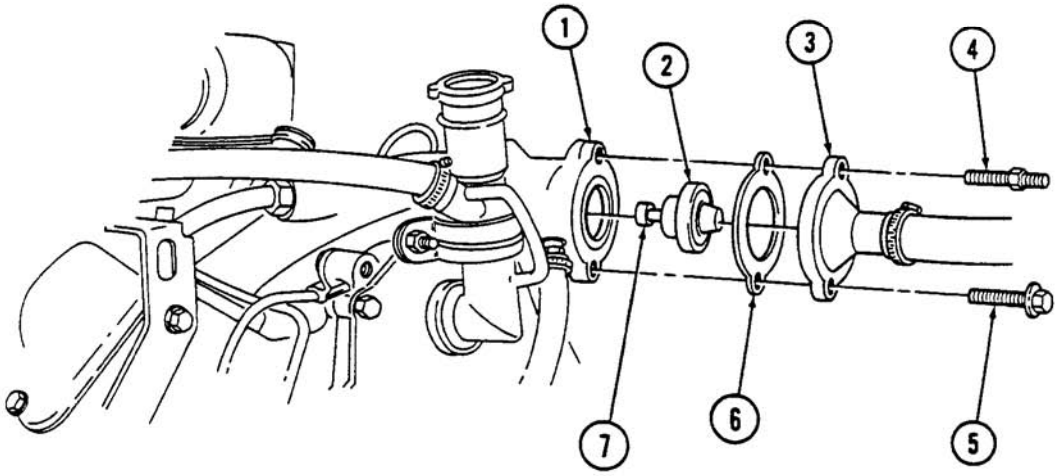

FOLLOW-ON TASK: Fill cooling system (para. 3-61).

3-77. WATER PUMP PULLEY REPLACEMENT

This task covers:

a. Removal **b. Installation**

INITIAL SETUP:

Tools
General mechanic's tool kit:
automotive (Appendix B, Item 1)
Maintenance and repair shop equipment:
automotive (Appendix B, Item 2)

Special Tools
Hex-head driver, 6 mm
(Appendix B, Item 146)

Materials/Parts
Sealing compound (Appendix C, Item 63)

Manual References
TM 9-2320-387-24P

Equipment Condition
- Fan drive and fan blade removed (para. 3-80).
- Serpentine drivebelt removed (para. 3-81).

Maintenance Level
Unit

NOTE

200-AMP dual voltage regulator shown.

a. Removal

Using hex-head driver, remove four socket-head screws (1) and water pump pulley (2) from water pump (3).

b. Installation

1. Install water pump pulley (2) on water pump (3).
2. Apply sealing compound to four socket-head screws (1), and install screws (1) on water pump pulley (2) and water pump (3). Tighten screws (1) to 15-20 lb-ft (20-27 N·m).

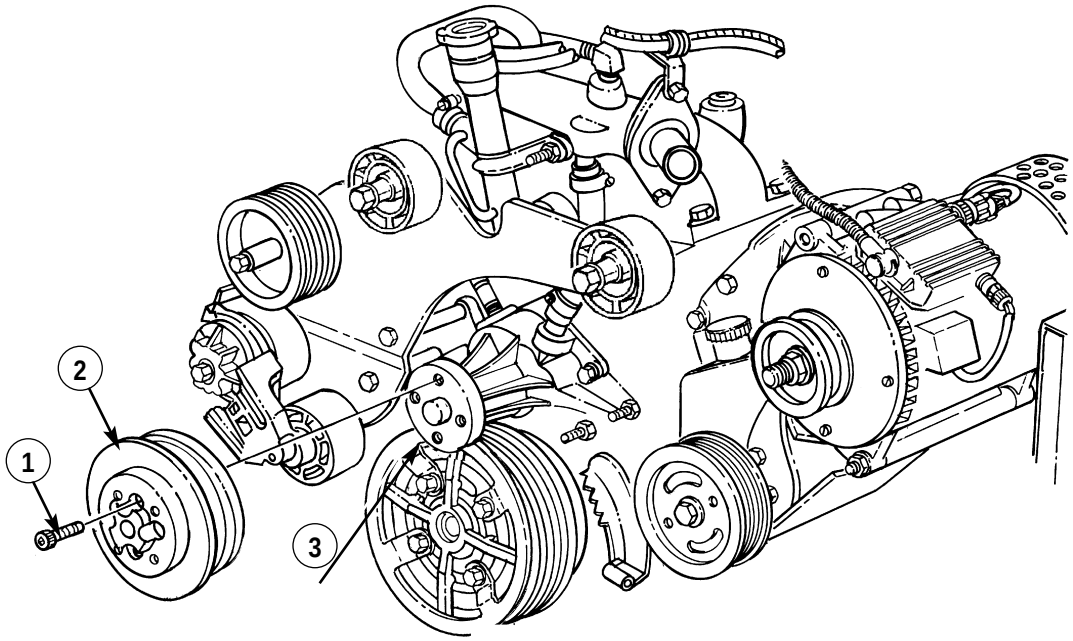

FOLLOW-ON TASKS:
- Install fan drive and fan blade (para. 3-80).
- Install serpentine drivebelt (para. 3-81).

3-78. WATER PUMP AND ADAPTER PLATE MAINTENANCE

This task covers:

a. Removal
b. Inspection
c. Installation

INITIAL SETUP:

Tools

General mechanic's tool kit: automotive (Appendix B, Item 1)
Maintenance and repair shop equipment: automotive (Appendix B, Item 2)

Materials/Parts

Gasket (Appendix G, Item 49)
Pipe sealing compound (Appendix C, Item 62)
Sealing compound (Appendix C, Item 63)
Anaerobic gasket sealer (Appendix C, Item 58)

Manual References

TM 9-2320-387-24P

Equipment Condition

- Engine oil filler tube removed (para. 3-3).
- Water pump inlet hose removed (para. 3-73).
- Water pump pulley removed (para. 3-77).
- Thermostat bypass hose removed (para. 3-68).
- Fan drive hose disconnected (para. 3-69).
- Tensioner, idler pulleys, and mounting hardware removed (para. 3-82).
- Power steering pump removed (para. 8-23).

Maintenance Level

Unit

a. Removal

1. Remove bypass nipple (4) from water crossover (3).
2. Remove studs (1), (13), (8), and (7), four capscrews (11), washers (12), two capscrews (9), capscrew (10), water pump (6), and adapter plate (5) from timing gear cover (2).
3. Remove seven capscrews (15), adapter plate (5), and gasket (14) from water pump (6). Discard gasket (14).
4. Clean remaining gasket material and sealing compound from sealing surfaces on adapter plate (5), water pump (6), and timing gear cover (2).
5. Remove heater hose nipple (17), elbow (16), and bypass hose adapter (19) from water pump (6).

b. Inspection

1. Inspect water pump (6) for cracks, breaks, or loose impeller. Replace if cracked, broken, or impeller is loose.
2. Inspect adapter plate (5) for corrosion. If adapter plate (5) is excessively corroded, replace.
3. Inspect elbow (16), heater hose nipple (17), and bypass hose adapter (19) for stripped threads and breaks. If damaged, replace.
4. Inspect rivet (18) for damage or looseness. Replace if damaged or loose. Apply sealing compound to replacement rivet (18) prior to installation.

3-78. WATER PUMP AND ADAPTER PLATE MAINTENANCE (Cont'd)

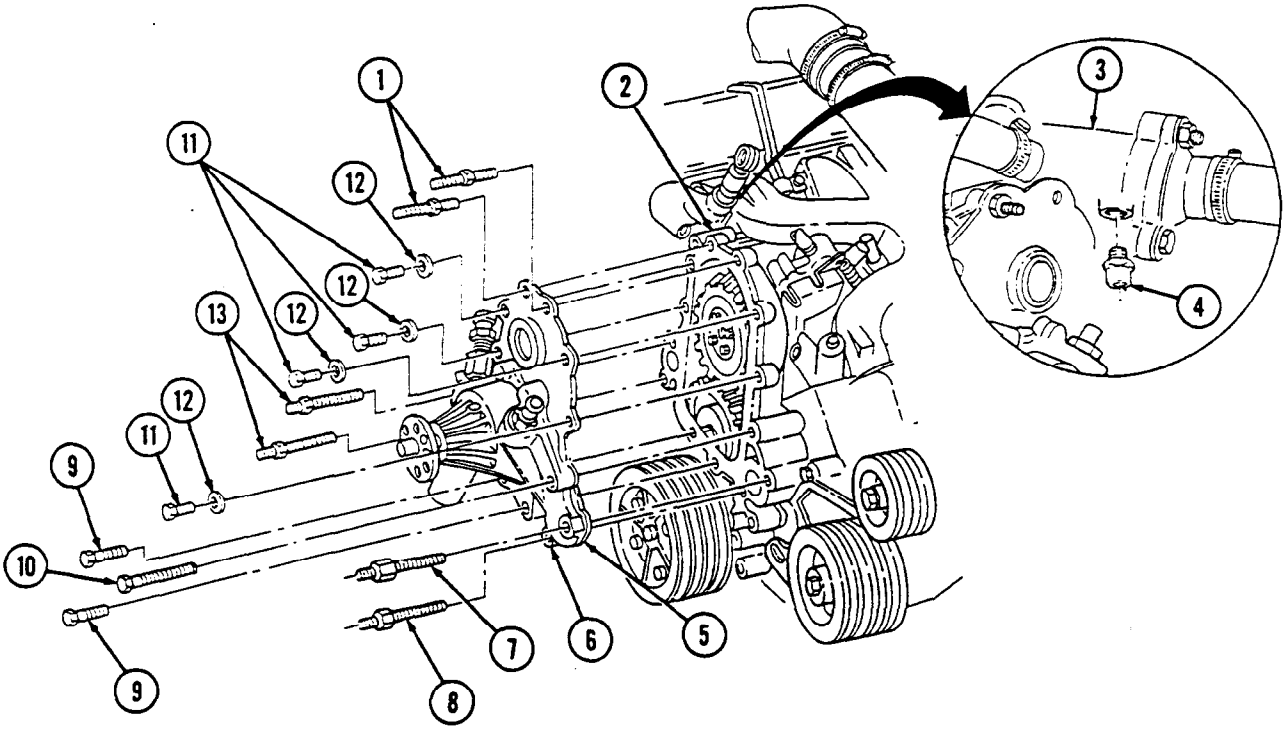

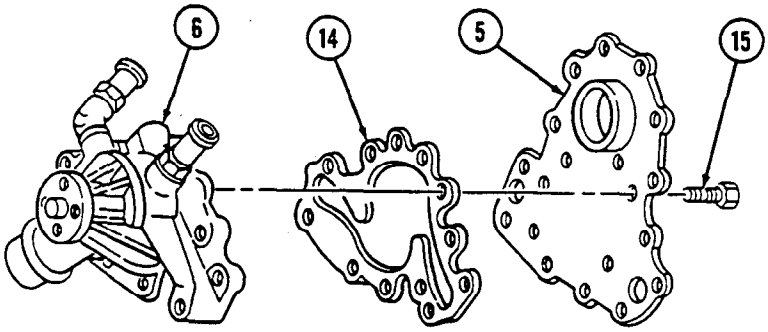

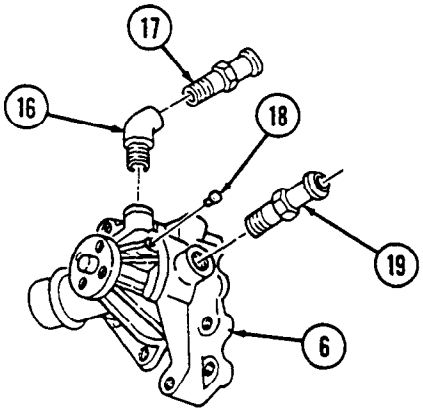

3-78. WATER PUMP AND ADAPTER PLATE MAINTENANCE (Cont'd)

c. Installation

CAUTION

Ensure water pump P/N 23500085 is used on 6.5L engines or damage to equipment will result.

1. Install gasket (6) and adapter plate (7) on water pump (5) with seven capscrews (8). Tighten capscrews (8) to 13-20 lb-ft (18-27 N•m).

NOTE

Perform step 2 if a new water pump is being installed.

2. Apply sealing compound to rivet (3) and install in water pump (5).
3. Apply anaerboic gasket sealer to sealing surfaces on adapter plate (7) following diagram shown.
4. Apply pipe sealing compound to capscrew (16).
5. Install adapter plate (7) and water pump (5) on timing gear cover (10) with two long studs (19), stud (14), stud with thick hex (13), and capscrew (16).
6. Install two capscrews (15), studs (9), four washers (18), and capscrews (17). Tighten studs (9) and capscrews (15) and (17) to 13-20 lb-ft (18-27 N•m). Tighten studs (19), (14), and (13) to 25-37 lb-ft (34-50 N•m).
7. Apply pipe sealing compound to threads of elbow (1), heater hose nipple (2), and bypass hose adapter (4) and install in water pump (5).
8. Coat threads of bypass nipple (12) with pipe sealing compound and install in water crossover (11).

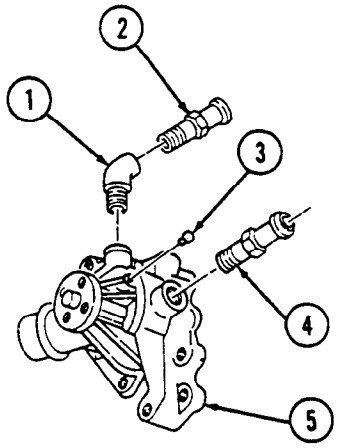

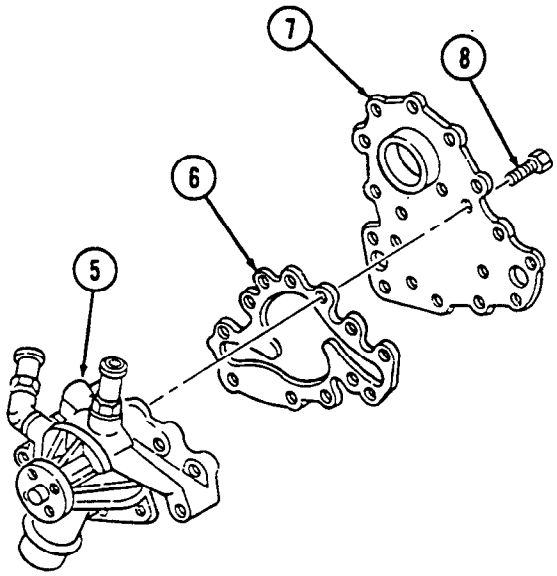

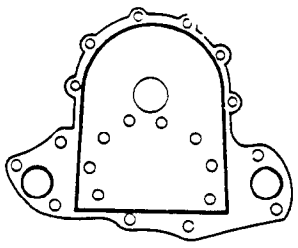

SEALANT DIAGRAM

3-78. WATER PUMP AND ADAPTER PLATE MAINTENANCE (Cont'd)

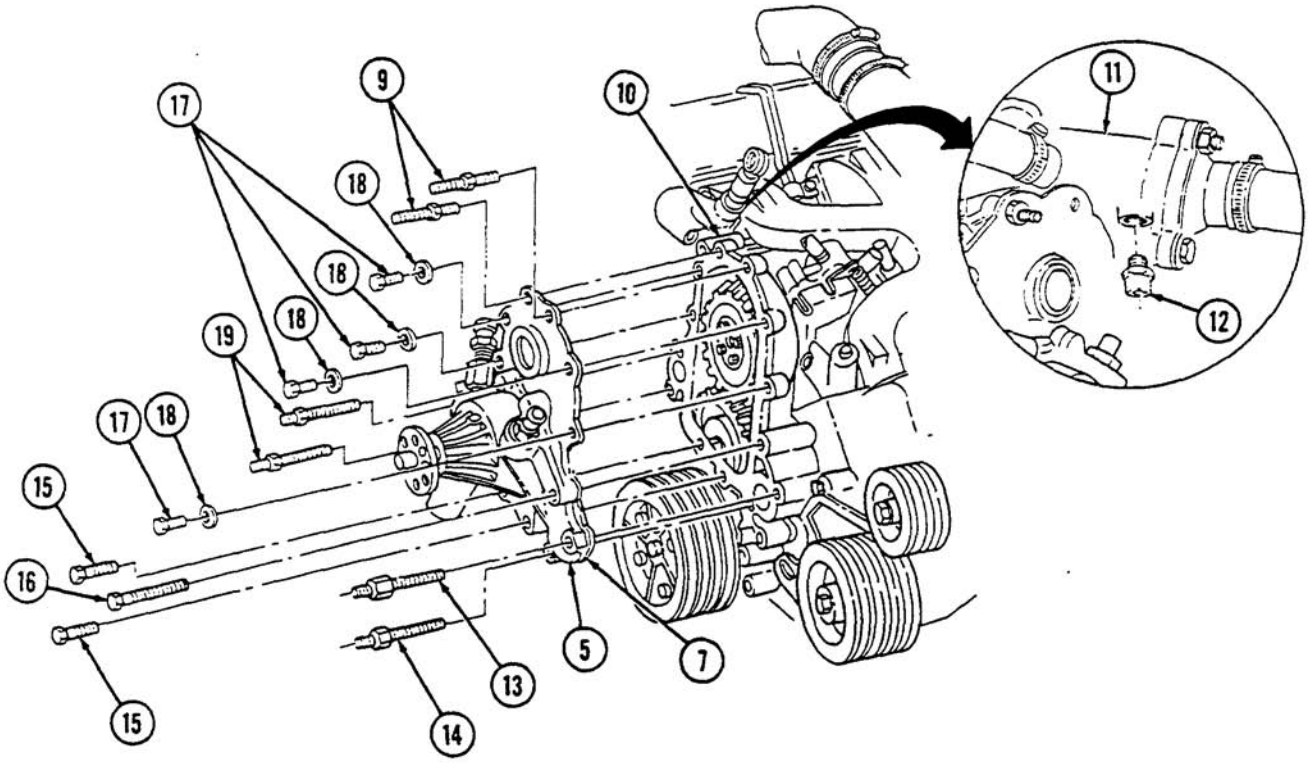

FOLLOW-ON TASKS:
- Install power steering pump (para. 8-23).
- Install tensioner, idler pulleys, and mounting hardware (para. 3-82).
- Connect fan drive hose (para. 3-69).
- Install water pump pulley (para. 3-77).
- Install water pump inlet hose (para. 3-73).
- Install engine oil filler tube (para. 3-3).
- Install thermostat bypass hose (para. 3-68).

3-79. WATER CROSSOVER MAINTENANCE

This task covers:

a. Removal
b. Inspection
c. Installation

INITIAL SETUP:

Tools
General mechanic's tool kit:
automotive (Appendix B, Item 1)
Maintenance and repair shop equipment:
automotive (Appendix B, Item 2)

Materials/Parts
Two gaskets (Appendix G, Item 44)

Manual References
TM 9-2320-387-24P

Equipment Condition
- Cooling system drained (para. 3-61).
- Fan temperature switch removed (para. 4-34).
- Glow plug controller removed (para. 4-33).
- Thermostat removed (para. 3-76).

Maintenance Level
Unit

a. Removal

1. Loosen three clamps (2) and disconnect hoses (1) from water crossover (4).
2. Remove four capscrews (6), water crossover (4), and two gaskets (7) from cylinder head (8). Discard gaskets (7).
3. Clean gasket surface on water crossover (4) and cylinder head (8).

b. Inspection

Inspect thermostat bypass nipple (3), surge tank hose nipple (5), and water pump hose adapter (9) for cracks or breaks. Replace if defective.

c. Installation

1. Install two gaskets (7) and water crossover (4) on cylinder head (8) with four capscrews (6). Tighten capscrews (6) to 25-35 lb-ft (34-48 N·m).
2. Connect three hoses (1) to water crossover (4) and tighten clamps (2).

3-79. WATER CROSSOVER MAINTENANCE (Cont'd)

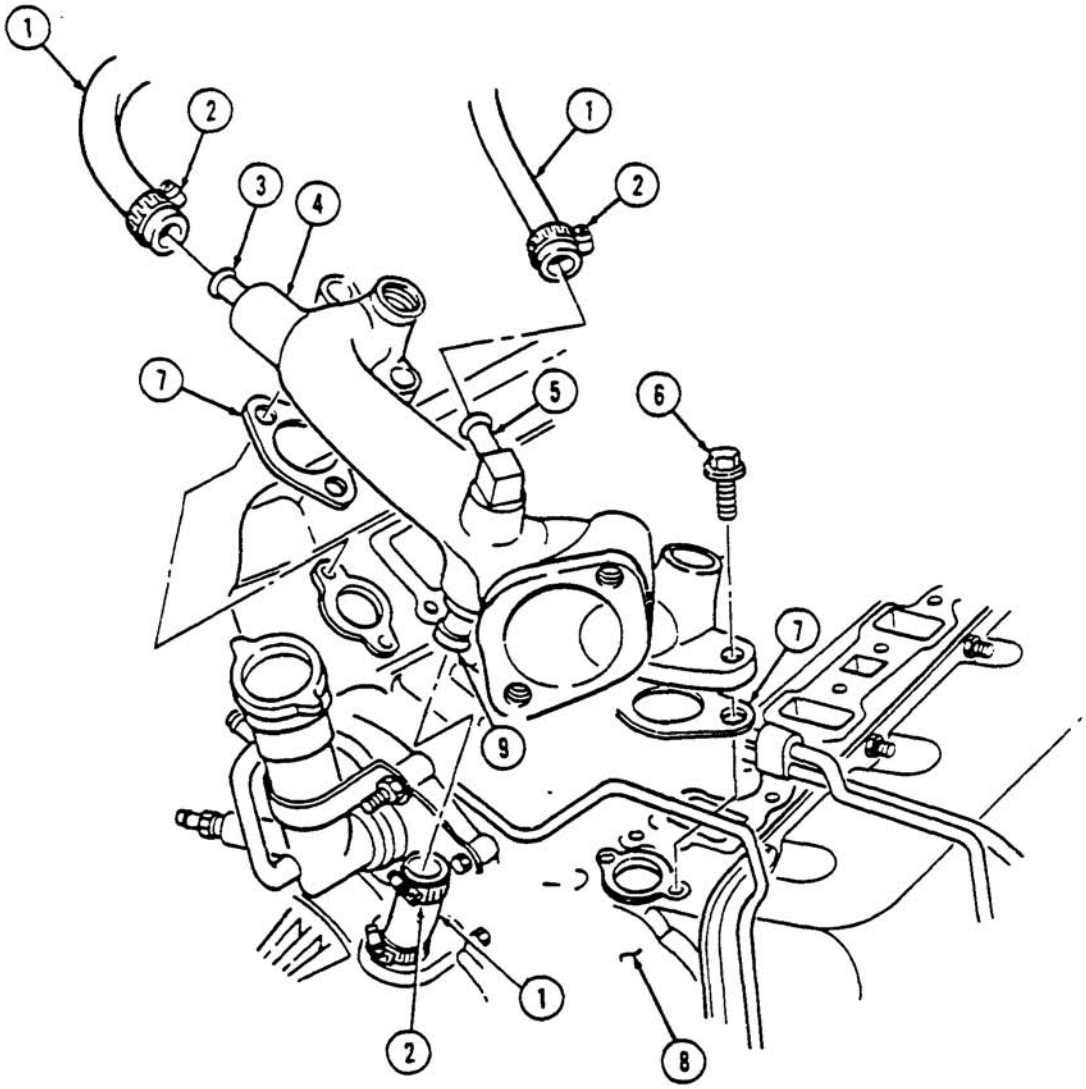

FOLLOW-ON TASKS:
- Install thermostat (para. 3-76).
- Install glow plug controller (para. 4-33).
- Install fan temperature switch (para. 4-34).
- Fill cooling system (para. 3-61).

3-80. FAN DRIVE AND FAN BLADE MAINTENANCE

This task covers:

a. Removal
b. Inspection
c. Installation

INITIAL SETUP:

Tools
General mechanic's tool kit: automotive (Appendix B, Item 1)
Maintenance and repair shop equipment: automotive (Appendix B, Item 2)

Special Tools
Hex-head driver, 8 mm (Appendix B, Item 145)

Materials/Parts
Four lockwashers (Appendix G, Item 144)
Sealing compound (Appendix C, Item 62)

Manual References
TM 9-2320-387-24P

Equipment Condition
Radiator and shroud removed (optional) (para. 3-62).

Maintenance Level
Unit

a. Removal

NOTE

- Mark position of fan blade for installation.
- It may be necessary to apply compressed air to clutch adapter to disengage fan drive clutch, allowing access to socket-head screws.

1. Using hex-head driver, remove four socket-head screws (1) and fan drive assembly (3) from water pump pulley (2).
2. Remove four nuts (5), lockwashers (6), and fan blade (7) from fan drive (8). Discard lockwashers (6).

b. Inspection

Inspect clutch adapter (4) and fan blade (7) for damaged threads, cracks, bent blades, or breaks. Replace if defective.

c. Installation

1. Align fan blade (7) on fan drive (8) and install four lockwashers (6) and nuts (5). Tighten nuts to 26 lb-ft (35 N·m).
2. Apply sealing compound to four socket-head screws (1) and install fan drive assembly (3) on water pump pulley (2) with socket-head screws (1). Tighten socket-head screws (1) to 45 lb-ft (61 N·m).

3-80. FAN DRIVE AND FAN BLADE MAINTENANCE (Cont'd)

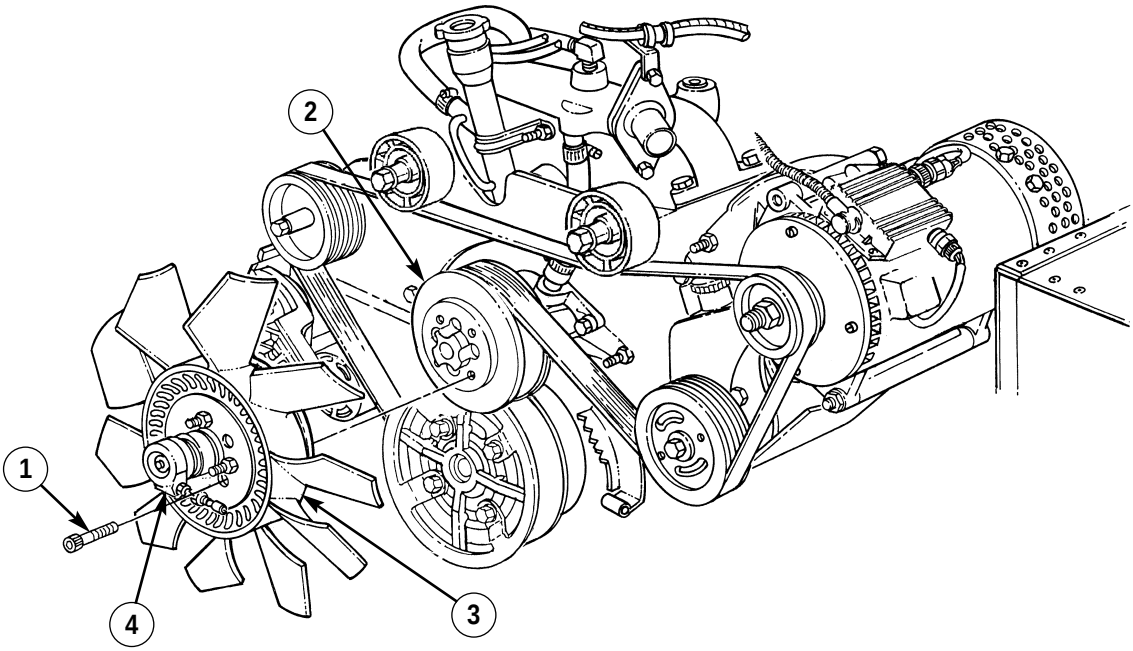

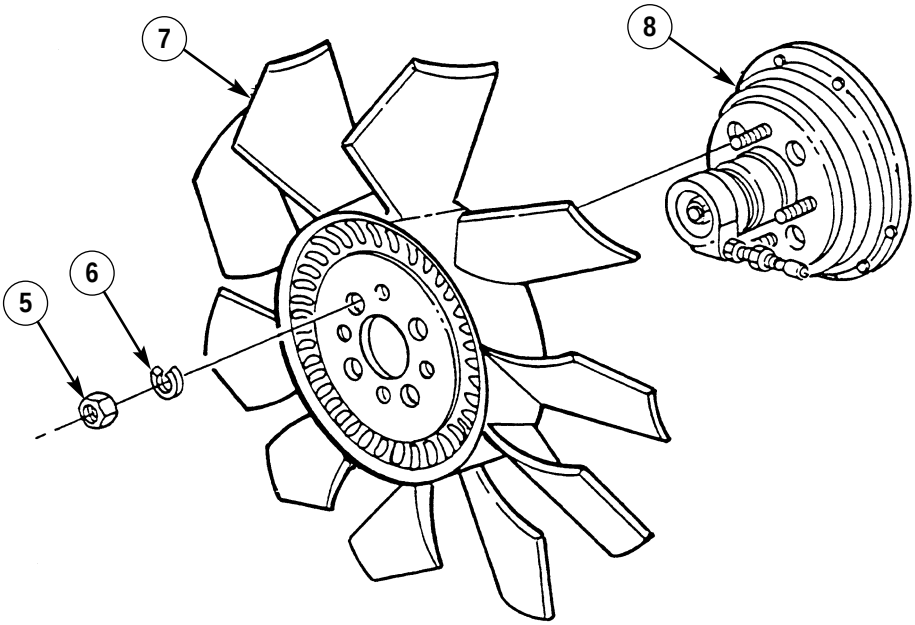

FOLLOW-ON TASK: Install radiator and shroud (if removed) (para. 3-62).

3-81. SERPENTINE DRIVEBELT MAINTENANCE (SERIAL NUMBERS 196900 AND BELOW)

This task covers:

a. Removal
b. Installation
c. Alignment

INITIAL SETUP:

Tools

General mechanic's tool kit: automotive (Appendix B, Item 1)
Maintenance and repair shop equipment: automotive (Appendix B, Item 2)
Pulley alignment tool (Appendix D, Fig. D-107)

Personnel Required

One mechanic
One assistant

Manual References

TM 9-2320-387-10

Equipment Condition

Hood raised and secured (TM 9-2320-387-10).

Maintenance Level

Unit

NOTE

200-AMP dual voltage regulator shown.

a. Removal

1. Position 3/8-in. breaker bar or, as appropriate, a 1/2-in. ratchet wrench on belt tensioner (7) and move tensioner (7) clockwise to loosen drivebelt (9).

NOTE

On M1114 vehicles equipped with A/C, the compressor pulley is used in place of the lower idler pulley.

2. Remove drivebelt (9) from power steering pump pulley (3), alternator pulley (2), water pump pulley (4), crankshaft pulley (5), air conditioning compressor or idler pulley (8), two upper idler pulleys (1), and tensioner pulley (6). Release belt tensioner (7).

CAUTION

Serpentine drivebelt failure (abnormal wear or belt dislodgement) can be caused by misalignment of pulleys, improper installation or foreign objects introduced into belt path.

NOTE

Check pulley and pulley grooves for damage and debris prior to installing serpentine drivebelt.

b. Installation

1. Position 3/8-in. breaker bar, or as appropriate, a 1/2-in. ratchet wrench on belt tensioner (7) and move tensioner (7) clockwise to allow installation of drivebelt (9).
2. Feed drivebelt (9) into grooves on crankshaft pulley (5), air conditioning compressor or idler pulley (8), two upper idler pulleys (1), alternator pulley (2), power steering pump pulley (3), water pump pulley (4), and tensioner pulley (6). Release belt tensioner (7).

3-81. SERPENTINE DRIVEBELT MAINTENANCE (SERIAL NUMBERS 196900 AND BELOW) (Cont'd)

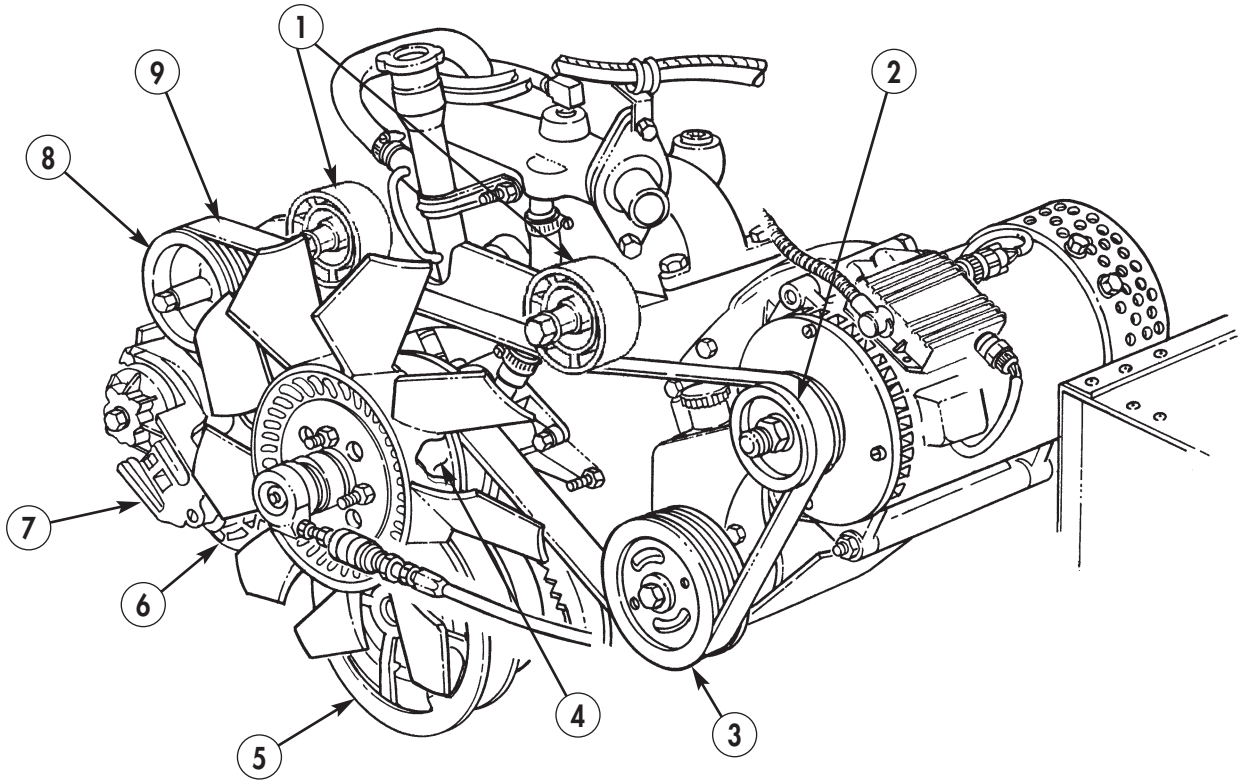

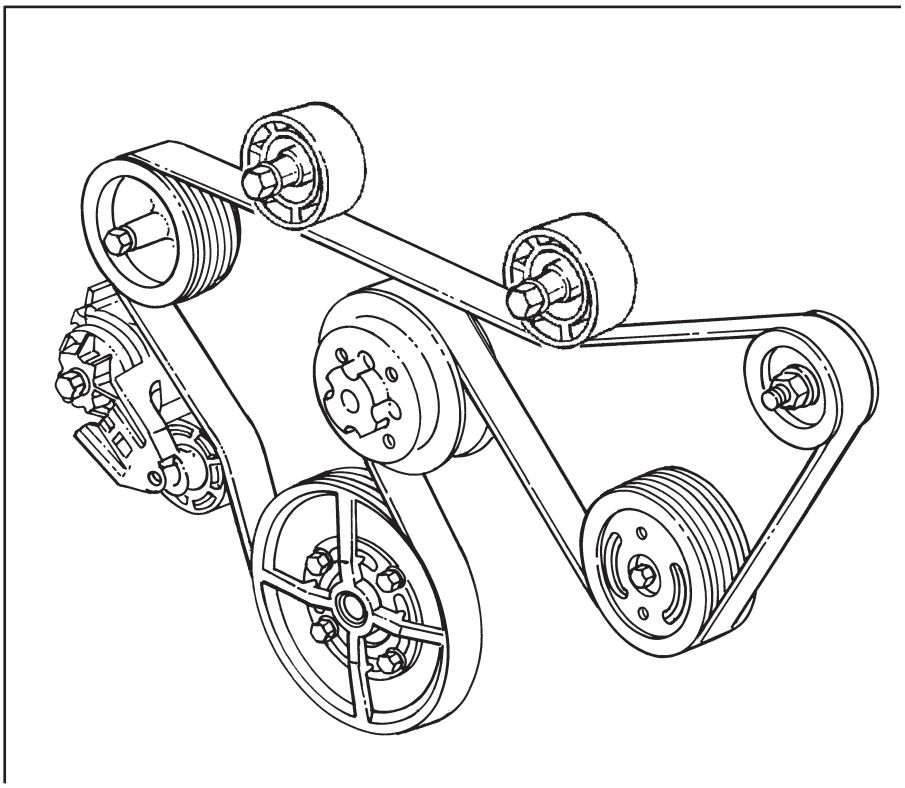

3-81. SERPENTINE DRIVEBELT MAINTENANCE (SERIAL NUMBERS 196900 AND BELOW) (Cont'd)

c. Alignment

CAUTION

Serpentine belt failure (abnormal wear or belt dislodgement) can be caused by misalignment of pulleys, improper installation or foreign objects introduced into belt path. Damage to equipment may result.

NOTE

Ensure tab of pulley alignment tool seats flush against back side of crankshaft pulley.

1. Position tab (1) of pulley alignment tool (5) behind crankshaft pulley (6) and straight edge portion (4) of pulley alignment tool (5) across power steering pump pulley (2) and alternator pulley (3). Tab (1) on pulley alignment tool (5) should seat flush against back side of crankshaft pulley (6). Straight edge portion (4) of pulley alignment tool (5) should seat flush against power steering pump pulley (2) and alternator pulley (3). If pulley alignment is not flush, rotate engine and recheck alignment in several locations. Proceed to step 3 if pulleys are out of alignment.
2. Position straight edge portion (4) of pulley alignment tool (5) against idler pulleys (7) and check for bent mounting bracket (8). If mounting bracket (8) is bent, refer to para. 3-82 for replacement.

NOTE

If any adjustments are made while performing steps 3 through 8, start engine and check for proper tracking of belt.

3. Check all pulleys (2), (3), (6), (7), and (12) for mud or foreign objects lodged in grooves.

NOTE

Power steering pump pulley must be flush with end of power steering pump shaft.

4. Check power steering pump pulley (2) for proper installation. Refer to para. 8-23.
5. Check power steering pump (11) and power steering/alternator mounting bracket (10) for proper installation and security of mounting hardware. Refer to paras. 4-3 and 8-23.
6. Check alternator pulley (3) for proper installation. Refer to para. 4-2.
7. Check alternator (9) for proper installation and security of mounting hardware. Refer to para. 4-5
8. Check idler pulleys (7) and mounting bracket (8) for proper installation and security of mounting hardware. Refer to para. 3-82.
9. Repeat steps 1 and 2 to verify alignment.

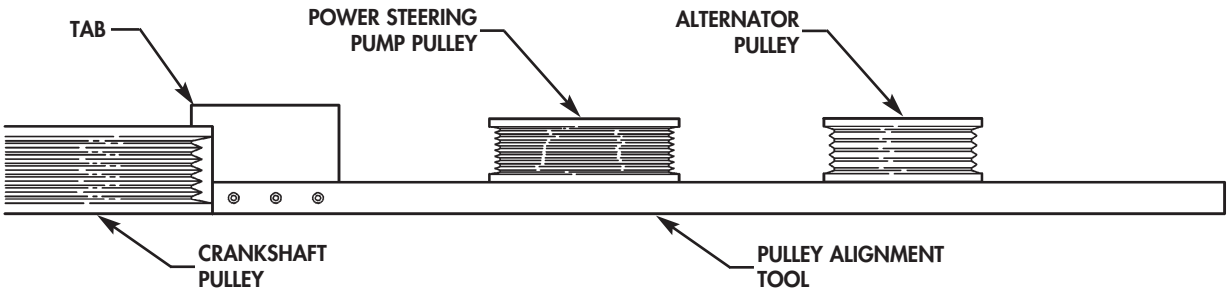

3-81. SERPENTINE DRIVEBELT MAINTENANCE (SERIAL NUMBERS 196900 AND BELOW) (Cont'd)

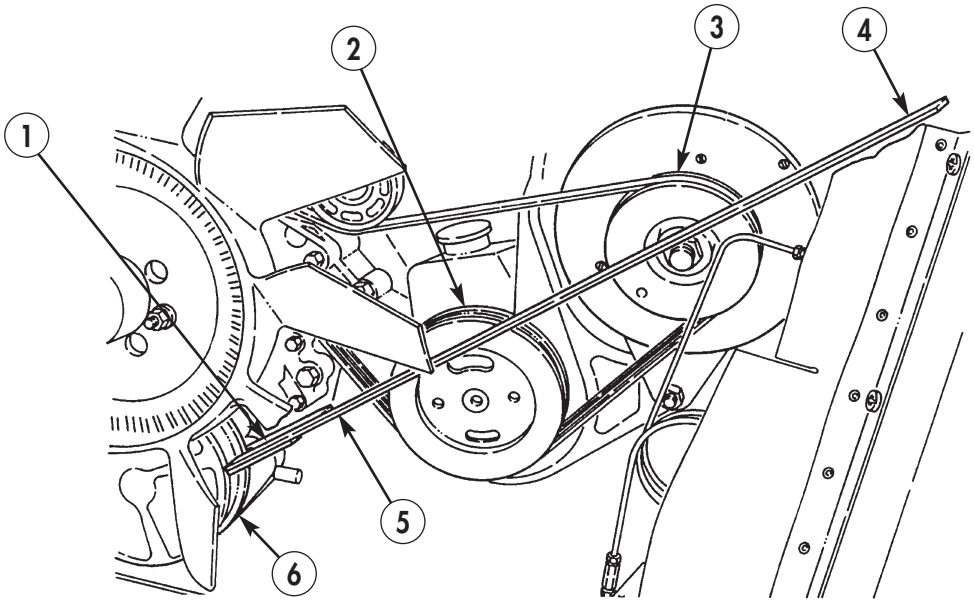

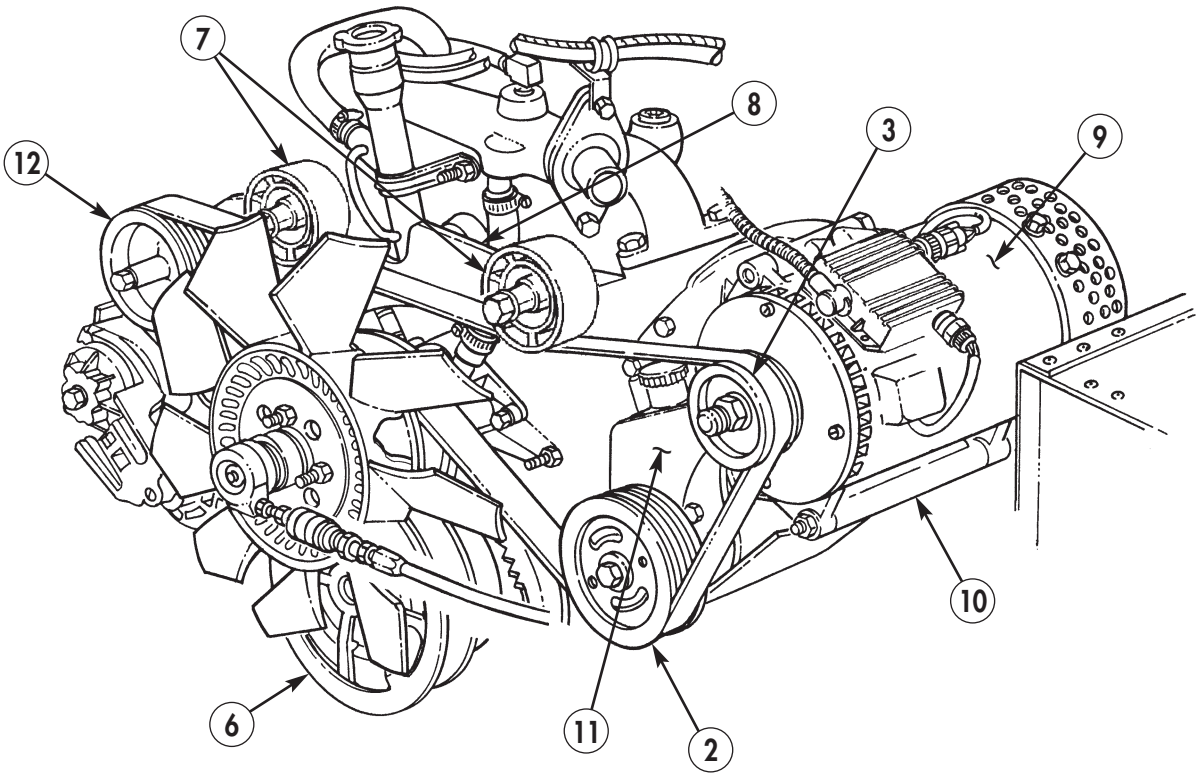

FOLLOW-ON TASK: Lower and secure hood (TM 9-2320-387-10).

3-81.1. SERPENTINE DRIVEBELT MAINTENANCE (SERIAL NUMBERS 196901 AND ABOVE)

This task covers:

a. Removal

b. Installation

c. Alignment

INITIAL SETUP:

Tools

General mechanic's tool kit: automotive (Appendix B, Item 1)
Maintenance and repair shop equipment: automotive (Appendix B, Item 2)
Pulley alignment tool (Appendix D, Fig. D-107)

Personnel Required

One mechanic
One assistant

Manual References

TM 9-2320-387-10

Equipment Condition

Hood raised and secured (TM 9-2320-387-10).

Maintenance Level

Unit

NOTE

200-AMP dual voltage regulator shown.

a. Removal

1. Position 3/8-in. breaker bar or, as appropriate, 1/2-in. ratchet wrench on belt tensioner (10) and move belt tensioner (10) clockwise to loosen drivebelt (2).

NOTE

On M1114 vehicles equipped with A/C, the compressor pulley is used in place of the lower idler pulley.

2. Remove drivebelt (2) from power steering pump pulley (6), idler pulley (5), alternator pulley (4), water pump pulley (8), crankshaft pulley (7), air conditioning compressor or idler pulley (1), two upper idler pulleys (3), and belt tensioner pulley (9). Release belt tensioner (10).

CAUTION

Serpentine drivebelt failure (abnormal wear or belt dislodgement) can be caused by misalignment of pulleys, improper installation, or foreign objects introduced into belt path.

NOTE

Check pulley and pulley grooves for damage and debris prior to installing serpentine belt.

b. Installation

1. Position 3/8-in. breaker bar or, as appropriate, 1/2-in. ratchet wrench on belt tensioner (10) and move belt tensioner (10) clockwise to allow installation of drivebelt (2).
2. Feed drivebelt (2) into grooves on crankshaft pulley (7), air conditioning compressor or idler pulley (1), two upper idler pulleys (3), alternator pulley (4), idler pulley (5), power steering pump pulley (6), water pump pulley (8), and tensioner pulley (9). Release belt tensioner (10).

3-81.1. SERPENTINE DRIVEBELT MAINTENANCE (SERIAL NUMBERS 196901 AND ABOVE) (Cont'd)

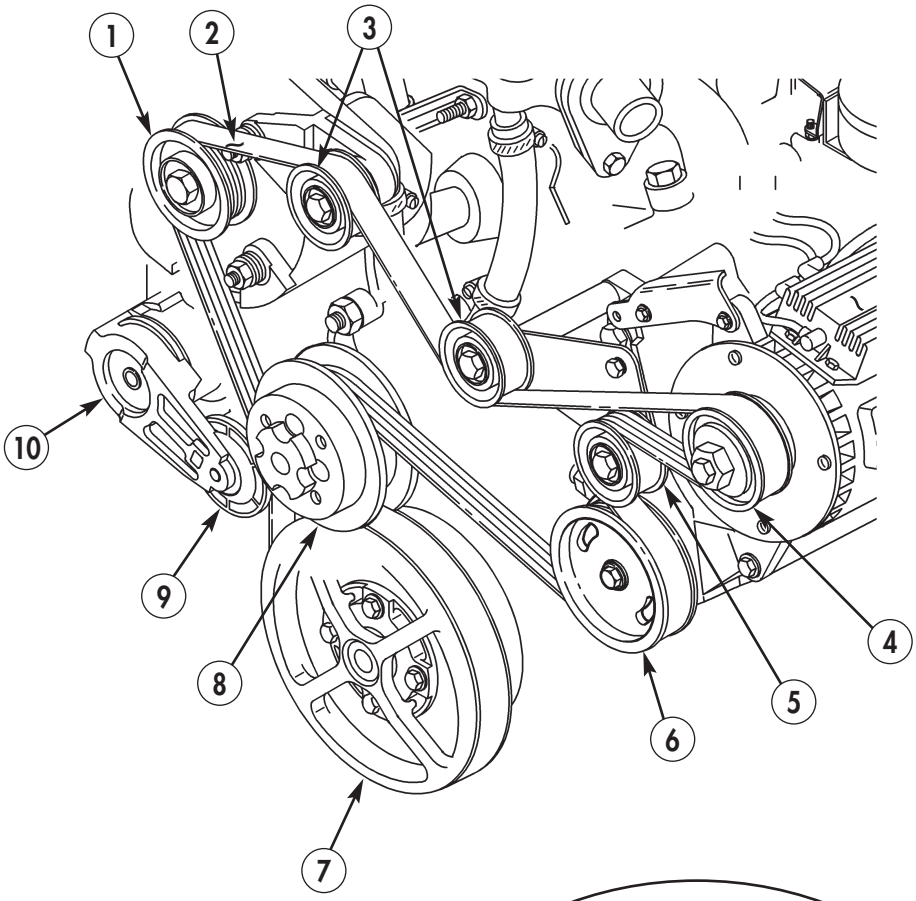

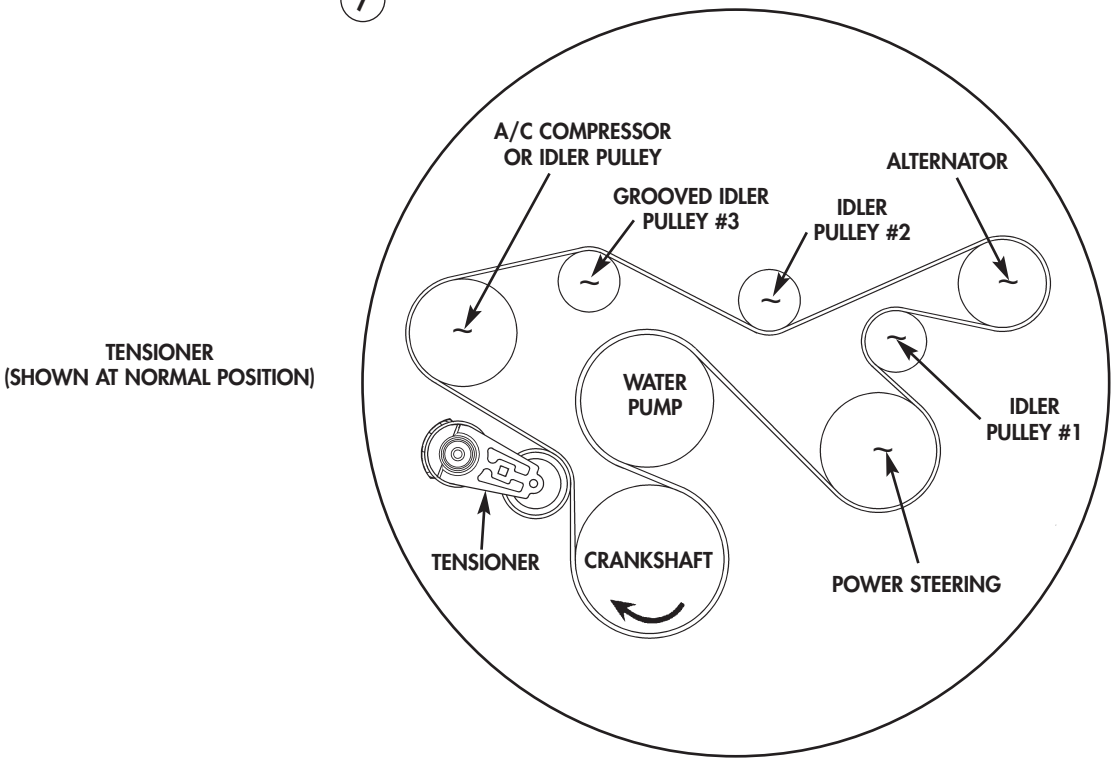

3-81.1. SERPENTINE DRIVEBELT MAINTENANCE (SERIAL NUMBERS 196901 AND ABOVE) (Cont'd)

c. Alignment

CAUTION

Serpentine drivebelt failure (abnormal wear or belt dislodgement) can be caused by misalignment of pulleys, improper installation, or foreign objects introduced into belt path. Damage to equipment may result.

NOTE

Ensure tab of pulley alignment tool seats flush against back side of crankshaft pulley.

1. Position tab (1) on pulley alignment tool (4) behind crankshaft pulley (5) and place straightedge portion of pulley alignment tool (4) across power steering pump pulley (2) and alternator pulley (3). Tab (1) on pulley alignment tool (4) should seat flush against back side of crankshaft pulley (5). Straightedge portion of pulley alignment tool (4) should seat flush against power steering pump pulley (2) and alternator pulley (3). If pulley alignment is not flush, rotate engine and recheck alignment in several locations. Proceed to step 3 if pulleys are out of alignment.
2. Position straightedge portion of pulley alignment tool (4) against idler pulleys (7) and (8) and check for bent mounting bracket (9). If mounting bracket (9) is bent, refer to para. 3-82.6 for replacement.

NOTE

If any adjustments are made while performing steps 3 through 8, start engine and check for proper tracking of belt.

3. Check all pulleys (2), (3), (6), (7), (8) and (5) for mud or foreign objects lodged in grooves.

NOTE

Power steering pump pulley must be flush with end of power steering pump shaft.

4. Check power steering pump pulley (2) for proper installation. Refer to para. 8-23.1.
5. Check power steering/alternator mounting bracket (11) for proper installation and security of mounting hardware. Refer to para. 4-3.1 and 8-23.1.
6. Check alternator pulley (3) for proper installation. Refer to para. 4-2.1.
7. Check alternator (10) for proper installation and security of mounting hardware. Refer to para. 4-5.
8. Check idler pulleys (8) and (12) and mounting bracket (9) for proper installation and security of mounting hardware. Refer to para. 3-82.7 and 3-82.6.
9. Repeat steps 1 and 2 to verify alignment.

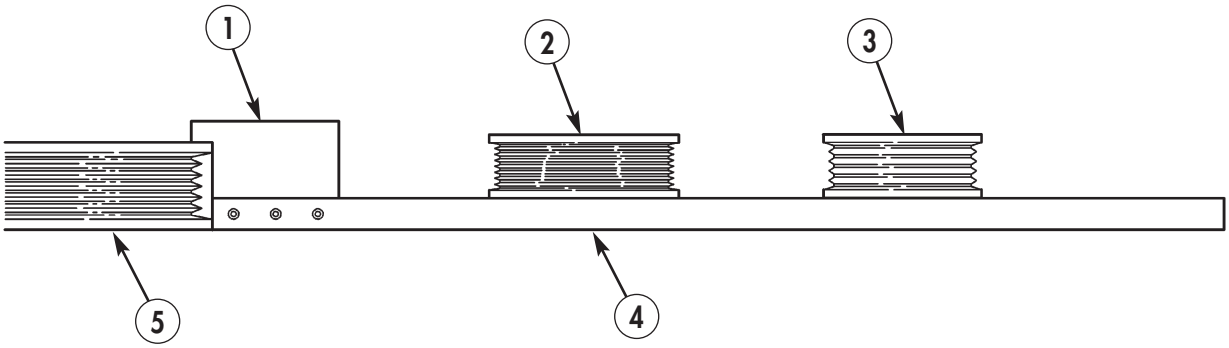

3-81.1. SERPENTINE DRIVEBELT MAINTENANCE (SERIAL NUMBERS 196901 AND ABOVE) (Cont'd)

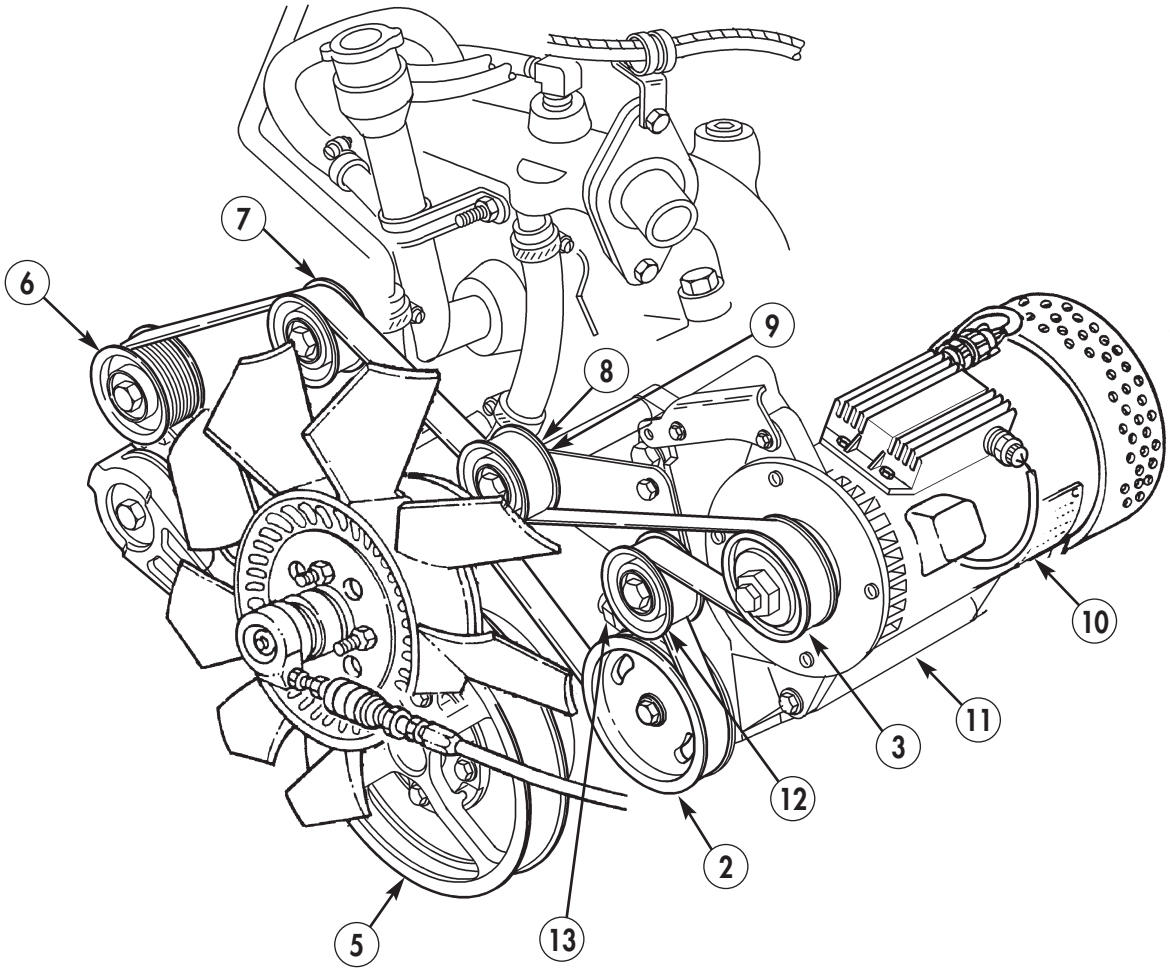

FOLLOW-ON TASK: Lower and secure hood (TM 9-2320-387-10)

3-82. TENSIONER, IDLER PULLEYS, AND MOUNTING HARDWARE REPLACEMENT

This task covers:

a. Removal **b. Installation**

INITIAL SETUP:

Tools
General mechanic's tool kit:
automotive (Appendix B, Item 1)

Materials/Parts
Two lockwashers (Appendix G, Item 185)
Three lockwashers (Appendix G, Item 183)

Manual References
TM 9-2320-387-24P

Equipment Condition
- Fan drive and fan blade removed (para. 3-80).
- Serpentine drivebelt removed (para. 3-81).

Maintenance Level
Unit

a. Removal

1. Remove capscrew (12) and tensioner (11) from mounting bracket (8).
2. Remove two nuts (6), lockwashers (5), washers (4), capscrews (1), washers (2), supports (3.1), idler pulleys (3), and dust covers (2.1) from mounting bracket (8). Discard lockwashers (5).

NOTE

- On M1114 vehicles equipped with A/C, the compressor pulley is in place of the lower idler pulley.
- Perform step 3 for M1113 models only.

3. Remove nut (20), lockwasher (19), washer (18), support (17), screw (13), washer (14), dust cover (15), and air conditioner compressor pulley or lower idler pulley (16) from mounting bracket (8). Discard lockwasher (19).
4. Remove two capscrews (10) and lockwashers (9) from water pump (7). Discard lockwashers (9).
5. Remove screw (7.1), collar washer (6.1), and mounting bracket (8) from engine (6.2).

b. Installation

1. Install mounting bracket (8) on engine (6.2) with collar washer (6.1) and screw (7.1).
2. Install lockwashers (9) and two capscrews (10) on water pump (7).

NOTE

Pulleys will turn if they are installed correctly. If pulleys do not turn, they may be installed incorrectly. Ensure dust covers are seated properly on pulleys.

3. Install two idler pulleys (3) and dust covers (2.1) on mounting bracket (8) with two supports (3.1), washers (2), capscrews (1), washers (4), lockwashers (5), and nuts (6).

NOTE

- On M1114 vehicles equipped with A/C, the compressor pulley is in place of the lower idler pulley.
- Perform step 4 for M1113 models only.

4. Install idler pulley (16) and support (17) on mounting bracket (8) with dustcover (15), washer (14), screw (13), washer (18), lockwasher (19), and nut (20).
5. Install tensioner (11) on mounting bracket (8) with capscrew (12).

3-82. TENSIONER, IDLER PULLEYS, AND MOUNTING HARDWARE REPLACEMENT (Cont'd)

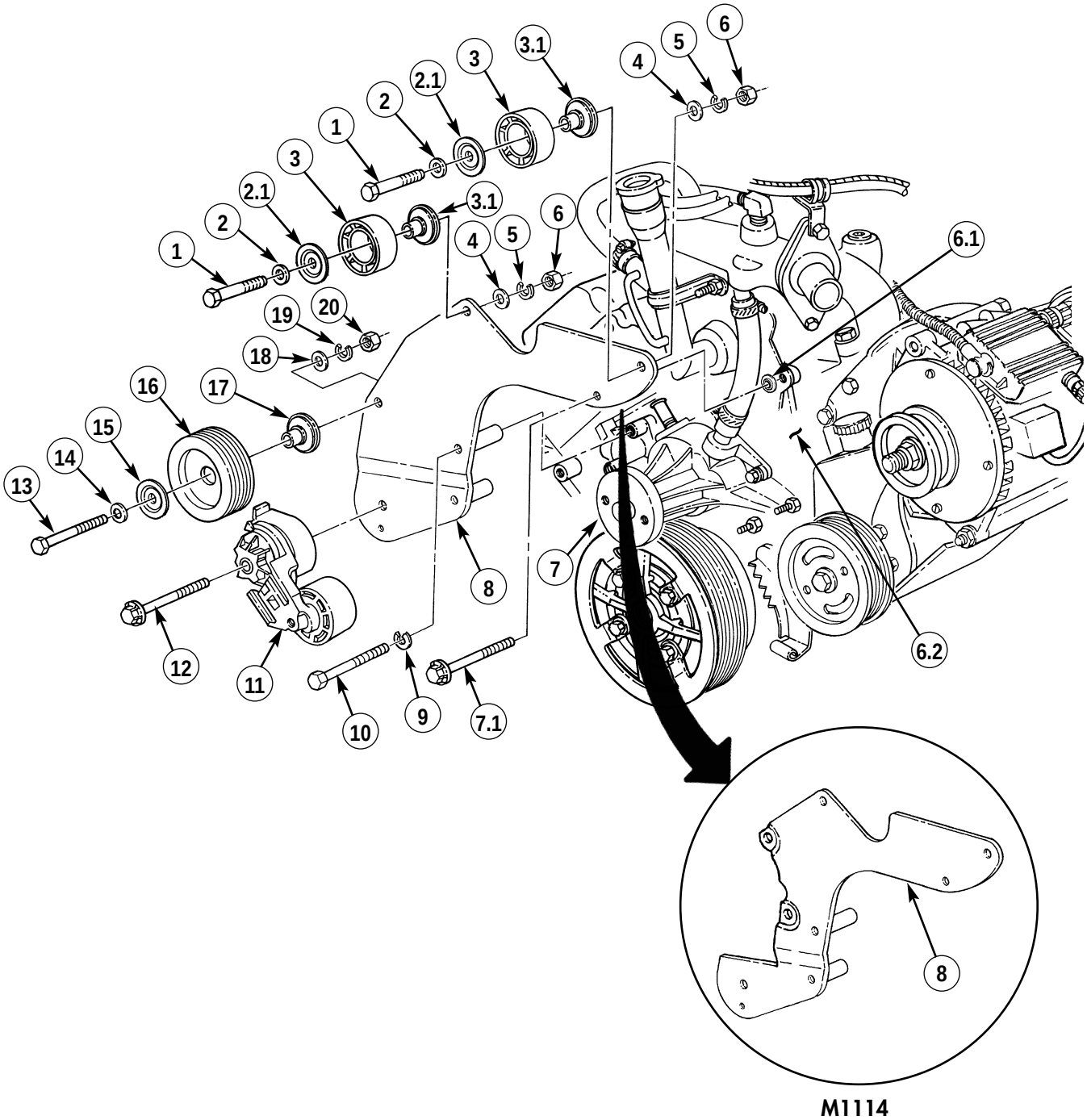

FOLLOW-ON TASKS:
- Install serpentine drivebelt (para. 3-81).
- Install fan drive and fan blade (para. 3-80).

3-82.1. TENSIONER AND MOUNTING HARDWARE REPLACEMENT (SERIAL NUMBERS 196901 AND ABOVE)

This task covers:

a. Removal **b. Installation**

INITIAL SETUP:

Tools
General mechanic's tool kit: automotive (Appendix B, Item 1)

Materials/Parts
Lockwasher (Appendix G, Item 144)

Manual References
TM 9-2320-387-24P

Equipment Condition
- Fan drive and fan blade removed (para. 3-80).
- Serpentine drivebelt removed (para. 3-81.1).

Maintenance Level
Unit

a. Removal

1. Remove capscrew (1), lockwasher (2), washer (3), and tensioner (5) from mounting bracket (4). Discard lockwasher (2).

b. Installation

1. Install tensioner (5) on mounting bracket (4) with washer (3), lockwasher (2), and capscrew (1).

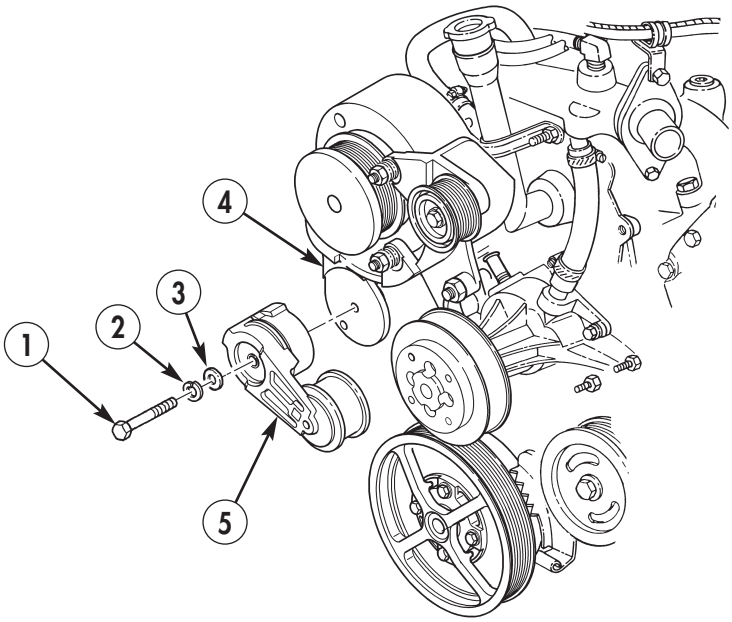

FOLLOW-ON TASKS:
- Install serpentine drivebelt (para. 3-81.1).
- Install fan drive and fan blade (para. 3-80).

3-82.2. IDLER PULLEY AND SUPPORT REPLACEMENT, VEHICLES W/O A/C (SERIAL NUMBERS 196901 AND ABOVE)

This task covers:

a. Removal **b. Installation**

INITIAL SETUP:

Tools

General mechanic's tool kit: automotive (Appendix B, Item 1)

Materials/Parts

Lockwasher (Appendix G, Item 174)
Three lockwashers (Appendix G, Item 144)

Manual References

TM 9-2320-387-24P

Equipment Condition

Serpentine drivebelt removed (para. 3-81.1).

Maintenance Level

Unit

a. Removal

1. Remove screw (1), pulley support (5), idler pulley (4), retainer (3), and lockwasher (2) from support (6). Discard lockwasher (2).
2. Remove three screws (10), washers (8), lockwashers (9), and support (6) from mounting bracket (7). Discard lockwashers (9).

b. Installation

1. Install support (6) on mounting bracket (7) with three lockwashers (9), washers (8), and screws (10).
2. Install pulley support (5) and idler pulley (4) on support (6) with lockwasher (2), retainer (3), and screw (1).

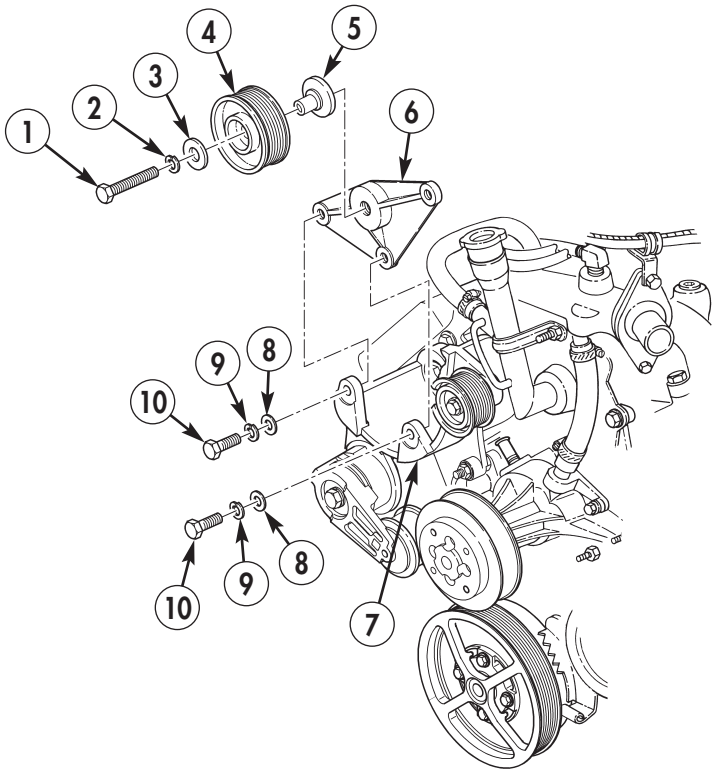

FOLLOW-ON TASK: Install serpentine drivebelt (para. 3-81.1).

3-82.3. GROOVED IDLER PULLEY AND SUPPORT REPLACEMENT (SERIAL NUMBERS 196901 AND ABOVE)

This task covers:

a. Removal **b. Installation**

INITIAL SETUP:

Tools
General mechanic's tool kit: automotive (Appendix B, Item 1)

Materials/Parts
Lockwasher (Appendix G, Item 174)

Manual References
TM 9-2320-387-24P

Equipment Condition
Serpentine drivebelt removed (para. 3-81.1).

Maintenance Level
Unit

a. Removal

Remove screw (1), pulley support (6), grooved idler pulley (5), cover (4), two washers (3), and lockwasher (2) from mounting bracket (7). Discard lockwasher (2).

b. Installation

Install pulley support (6) and grooved idler pulley (5) on mounting bracket (7) with lockwasher (2), washers (3), cover (4), and screw (1).

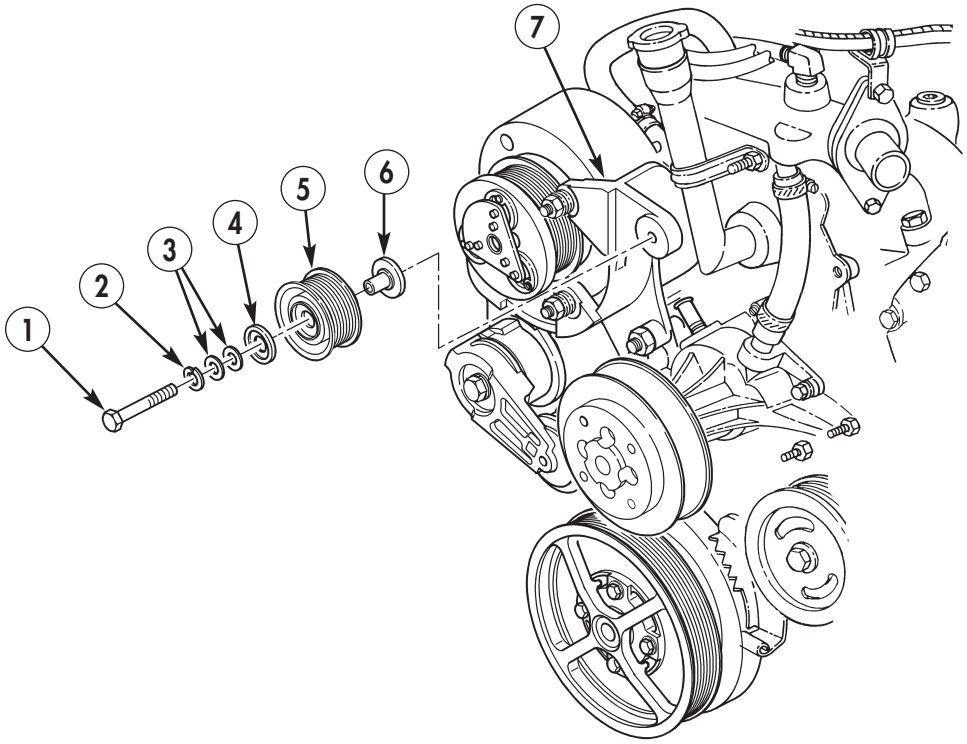

FOLLOW-ON TASK: Install serpentine drivebelt (para. 3-81.1).

3-82.4. MOUNTING BRACKET REPLACEMENT, VEHICLES W/O A/C (SERIAL NUMBERS 196901 AND ABOVE)

This task covers:

a. Removal **b. Installation**

INITIAL SETUP:

Tools

General mechanic's tool kit:
automotive (Appendix B, Item 1)
Maintenance and repair shop equipment:
automotive (Appendix B, Item 2)

Materials/Parts

Two lockwashers (Appendix G, Item 185)
Adhesive sealant (Appendix C, Item 3.1)

Manual References

TM 9-2320-387-24P

Equipment Condition

- Idler pulley and support removed (para. 3-82.2)
- Tensioner removed (para. 3-82.1)
- Grooved idler pulley removed (para. 3-82.3)

Maintenance Level

Unit

a. Removal

1. Remove two nuts (6) and lockwashers (5) from studs (4) on water pump (3). Discard lockwashers (5).
2. Remove two screws (1) and mounting bracket (7) from engine (2).

b. Installation

1. Apply sealant to threads of two screws (1), and install mounting bracket (7) on engine (2) with screws (1). Do not tighten screws (1).
2. Secure mounting bracket (7) to studs (4) on water pump (3) with two lockwashers (5) and nuts (6). Tighten screws (1) to 43-51 lb-ft (58-69 N·m) and nuts (6) to 33-41 lb-ft (45-56 N·m).

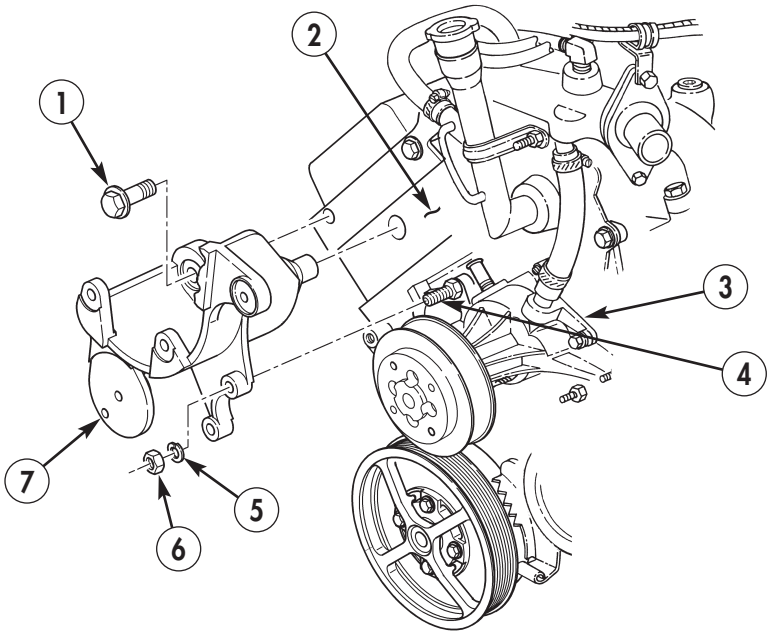

FOLLOW-ON TASKS:
- Install grooved idler pulley (para. 3-82.3).
- Install tensioner (para. 3-82.1).
- Install idler pulley and support (para. 3-82.2).

3-82.5. MOUNTING BRACKET REPLACEMENT, VEHICLES W/ A/C (SERIAL NUMBERS 196901 AND ABOVE)

This task covers:

a. Removal **b. Installation**

INITIAL SETUP:

Tools

General mechanic's tool kit:
automotive (Appendix B, Item 1)
Maintenance and repair shop equipment:
automotive (Appendix B, Item 2)

Materials/Parts

Two lockwashers (Appendix G, Item 185)
Adhesive sealant (Appendix C, Item 3.1)

Manual References

TM 9-2320-387-24P

Equipment Condition

- Serpentine drivebelt removed (para. 3-81.1).
- Tensioner removed (para. 3-82.1).
- A/C compressor removed (para. 25-20.2)
- Grooved idler pulley removed (para. 3-82.3)

Maintenance Level

Unit

a. Removal

1. Remove two nuts (6) and lockwashers (5) from studs (4) on water pump (3). Discard lockwashers (5).
2. Remove two screws (1) and mounting bracket (7) from engine (2).

b. Installation

1. Apply sealant to threads of two screws (1), and install mounting bracket (7) on engine (2) with screws (1). Do not tighten screws (1).
2. Secure mounting bracket (7) to studs (4) on water pump (3) with two lockwashers (5) and nuts (6). Tighten screws (1) to 43-51 lb-ft (58-69 N·m) and nuts (6) to 33-41 lb-ft (45-56 N·m).

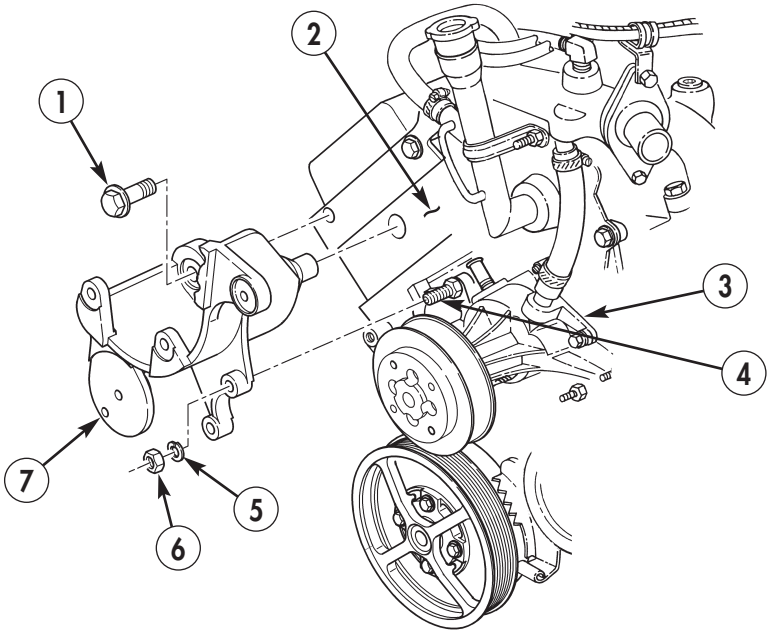

FOLLOW-ON TASKS:
- Install grooved idler pulley (para. 3-82.3).
- Install A/C compressor (para. 25-20.2).
- Install tensioner (para. 3-82.1).
- Install serpentine drivebelt (para. 3-81.1).

3-82.6. IDLER PULLEY REPLACEMENT (SERIAL NUMBERS 196901 AND ABOVE)

This task covers:

a. Removal **b. Installation**

INITIAL SETUP:

Tools
General mechanic's tool kit:
automotive (Appendix B, Item 1)
Maintenance and repair shop equipment:
automotive (Appendix B, Item 2)

Materials/Parts
Two lockwashers (Appendix G, Item 138)

Manual References
TM 9-2320-387-24P

Equipment Condition
Serpentine drivebelt removed (para. 3-81.1).

Maintenance Level
Unit

a. Removal

1. Remove screw (15), pulley support (10), idler pulley (11), cover (12), two washers (13), and lockwasher (14) from idler pulley bracket (8) and alternator/pump support (9). Discard lockwasher (14).
2. Remove screw (1), spacer (7), pulley support (6), idler pulley (5), cover (4), two washers (3), and lockwasher (2) from idler pulley bracket (8) and alternator/pump support (9). Discard lockwasher (2).

b. Installation

1. Install spacer (7), pulley support (6), and idler pulley (5) on idler pulley bracket (8) and alternator/pump support (9) with cover (4), two washers (3), lockwasher (2), and screw (1). Do not tighten screw (1).
2. Install pulley support (10) and idler pulley (11) on idler pulley bracket (8) and alternator/pump support (9) with cover (12), two washers (13), lockwasher (14), and screw (15). Tighten screws (1) and (15) to 33-41 lb-ft (45-56 N·m)

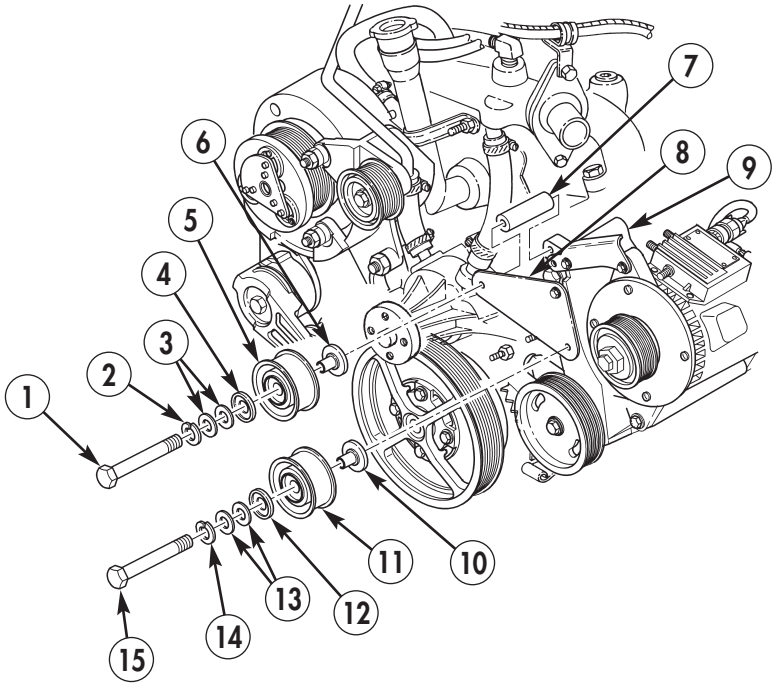

FOLLOW-ON TASK: Install serpentine drivebelt (para. 3-81.1).

3-82.7. IDLER PULLEY BRACKET REPLACEMENT (SERIAL NUMBERS 196901 AND ABOVE)

This task covers:

a. Removal **b. Installation**

INITIAL SETUP:

Tools
General mechanic's tool kit:
automotive (Appendix B, Item 1)
Maintenance and repair shop equipment:
automotive (Appendix B, Item 2)

Materials/Parts
Lockwasher (Appendix G, Item)

Manual References
TM 9-2320-387-24P

Equipment Condition
Idler pulleys removed (para. 3-82.6).

Maintenance Level
Unit

a. Removal

Remove screw (1), washer (3), lockwasher (2), and idler pulley bracket (4) from alternator/pump support (5). Discard lockwasher (2).

b. Installation

1. Install idler pulley bracket (4) on alternator/pump support (5) with washer (3), lockwasher (2), and screw (1).

NOTE

Tighten idler pulley bracket screw (1) after idler pulleys have been installed and tightened.

2. Tighten screw (1) to 33-41 lb-ft (45-56 N·m).

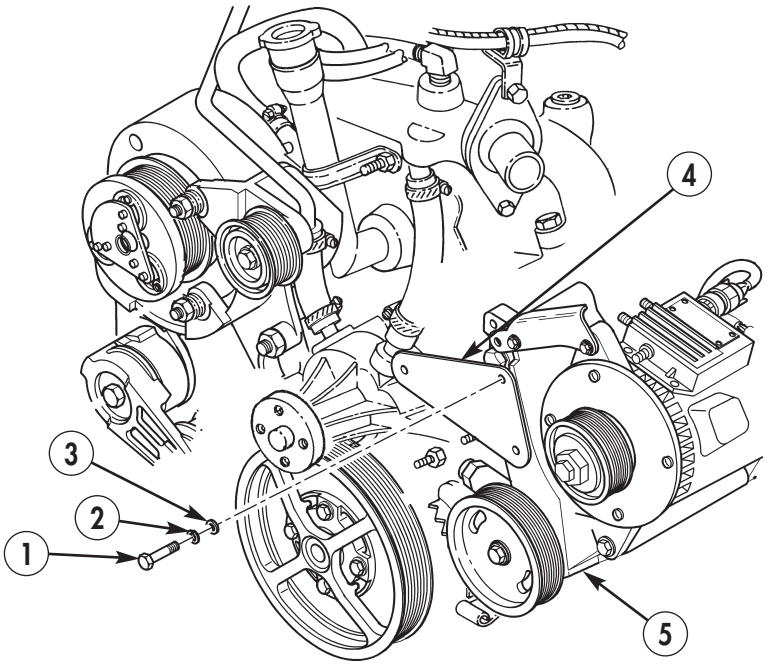

FOLLOW-ON TASK: Install idler pulleys (para. 3-82.6).

3-83. FAN DRIVE FRICTION LINING REPLACEMENT

This task covers:

a. Removal **b. Installation**

INITIAL SETUP:

Tools

General mechanic's tool kit: automotive (Appendix B, Item 1)

Manual References

TM 9-2320-387-24P

Equipment Condition

Disconnect battery ground cables (para. 4-68).

General Safety Instructions

Prior to loosening screws on fan drive retaining plates, disconnect fan drive hose from fan drive.

Maintenance Level

Unit

a. Removal

WARNING

Prior to loosening screws on fan drive retaining plates, disconnect fan drive hose from fan drive. Failure to do so may result in injury to personnel or damage to equipment.

NOTE

It may be necessary to apply compressed air to clutch adapter to disengage fan drive clutch, allowing access to friction lining screws.

1. Remove six screws (1) and three retaining plates (2) from fan drive (3).
2. Remove two friction linings (4) from fan drive (3).

b. Installation

1. Install two friction linings (4) on fan drive (3).
2. Install three retaining plates (2) on fan drive (3) with six screws (1). Tighten screws (1) to 22 lb-in. (2.5 N·m).

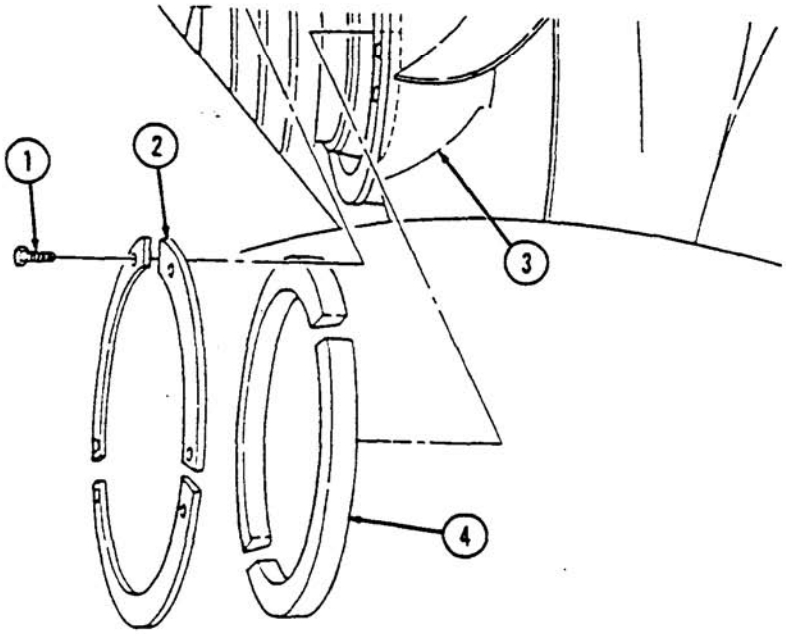

FOLLOW-ON TASK: Connect battery ground cables (para. 4-68).

3-84. DIFFERENTIAL COOLER LINES REPLACEMENT (SERIAL NUMBERS 188974 AND BELOW)

This task covers:

a. Front Hoses and Relief Valve Removal
b. Oil Cooler Hoses and Tubes Removal
c. Oil Cooler Hoses and Tubes Installation
d. Front Hoses and Relief Valve Installation

INITIAL SETUP:

Tools

General mechanic's tool kit:
automotive (Appendix B, Item 1)
Maintenance and repair shop equipment:
automotive (Appendix B, Item 2)

Materials/Parts

Sealing compound, pipe (Appendix C, Item 62)
Four lockwashers (Appendix G, Item 146)
Four lockwashers (Appendix G, Item 190.1)
Lockwasher (Appendix G, Item 190.2)
Two locknuts (Appendix G, Item 82)
Two locknuts (Appendix G, Item 77)
Locknut (Appendix G, Item 106)
Two O-rings (Appendix G, Item 218)
Two O-rings (Appendix G, Item 221)
Four tiedown straps (Appendix G, Item 323)
Tiedown strap (Appendix G, Item 329)

Manual References

TM 9-2320-387-10
TM 9-2320-387-24P

Equipment Condition

- Battery ground cables disconnected (para. 4-68).
- Rear brake protection guards removed (para. 7-11).
- Rear propeller shaft removed (para. 6-4).

General Safety Instructions

- Allow differential to cool.
- Hood must be supported during hood prop rod and bracket removal.

Maintenance Level

Unit

a. Front Hoses and Relief Valve Removal

WARNING

Allow differential to cool before performing this task. Severe injury to personnel may result.

CAUTION

Cover or plug all hoses and connections immediately after disconnection to prevent contamination. Remove all plugs prior to connection.

NOTE

- Have drainage container ready to catch oil.
- For ease of identification during installation, tag with tape all hose ends that route to the left port on the rear differential oil cooler. Left port is inlet side.

1. Remove locknut (1), washer (2), and bolt (5) from clamps (3) and (4). Discard locknut (1).
2. Remove clamp (3) from bypass hose (6).
3. Loosen three clamps (19) from tee (20).
4. Disconnect bypass hose (6) and return hoses (22) and (21) from tee (20).
5. Disconnect bypass hose (13) from union (15).
6. Disconnect bypass hose (6) from union (26).
7. Remove two bolts (18), washers (17), relief valve (14), and reinforcement (23) from splash shield (7).
8. Remove union (15) and O-ring (16) from top of relief valve (14). Discard O-ring (16).
9. Remove union (26) and O-ring (24) from side of relief valve (14). Discard O-ring (24).

3-84. DIFFERENTIAL COOLER LINES REPLACEMENT (SERIAL NUMBERS 188974 AND BELOW) (Cont'd)

WARNING

Hood must be supported during hood prop rod and bracket removal. Failure to support hood may cause injury to personnel or damage to equipment.

10. Remove four screws (12), lockwashers (11), hood prop rod (8), and bracket (10) from left splash shield (7) and air lift bracket (9). Discard lockwashers (11).

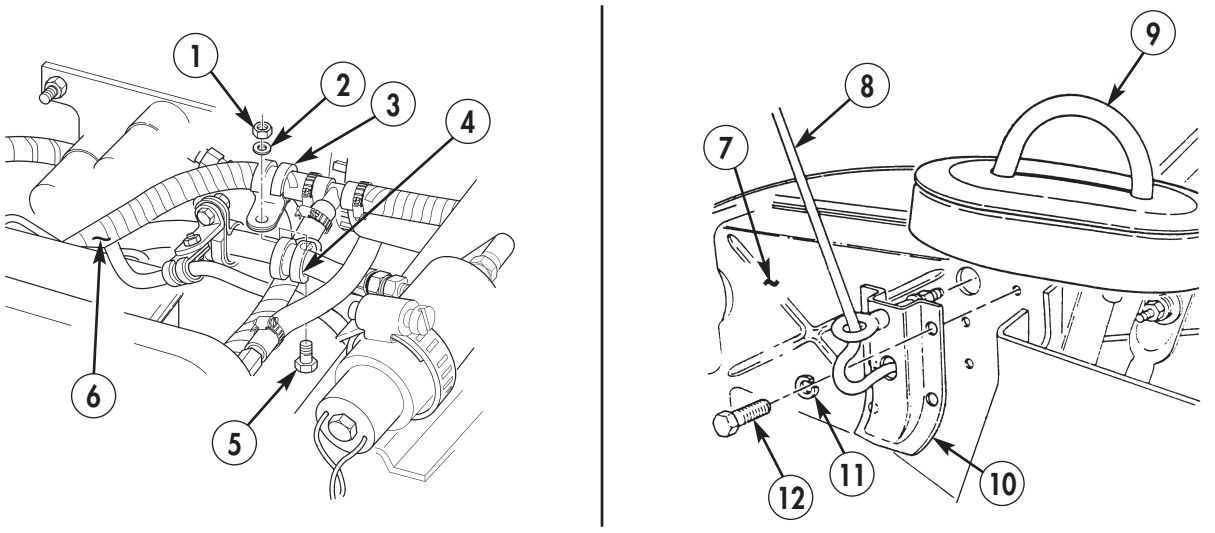

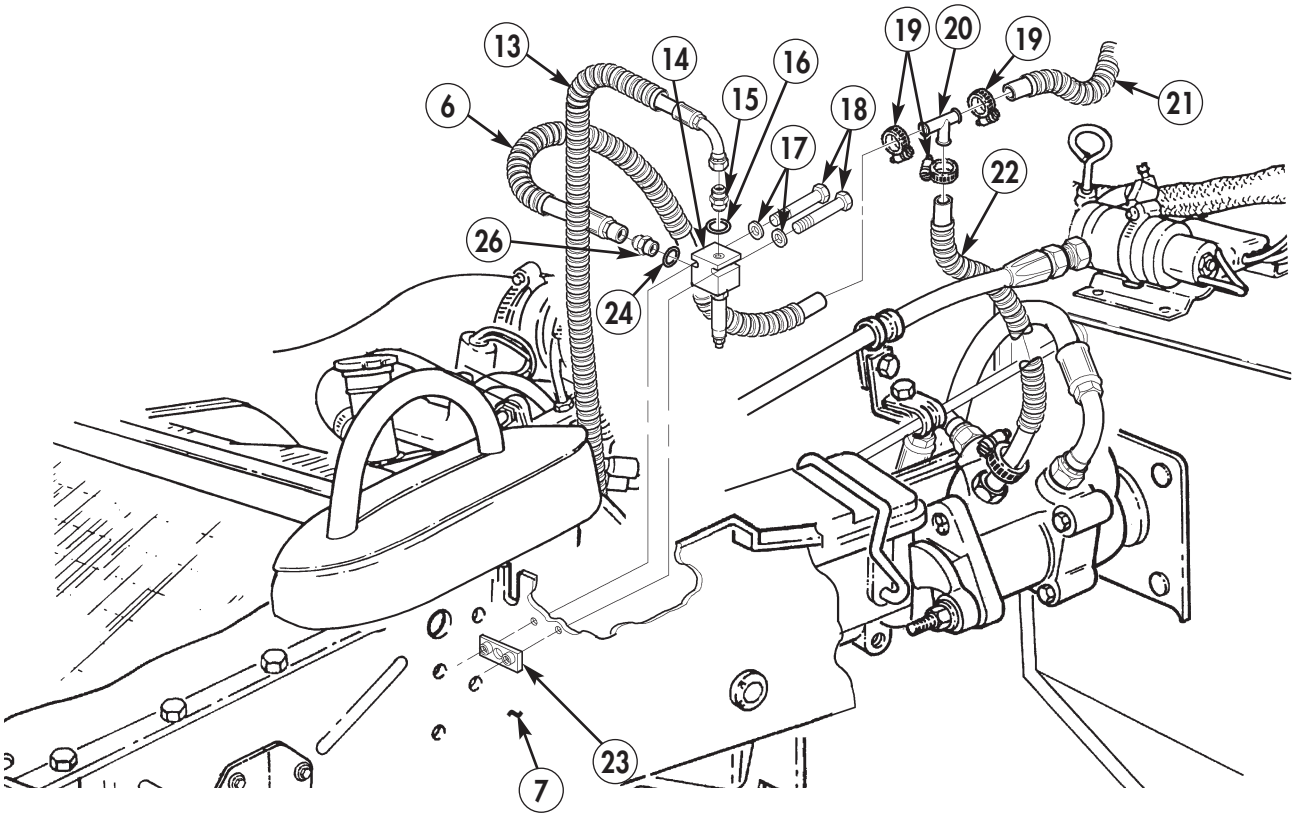

3-84. DIFFERENTIAL COOLER LINES REPLACEMENT (SERIAL NUMBERS 188974 AND BELOW) (Cont'd)

11. Remove three screws (14), washers (15), and access cover (18) from left splash shield (3).

NOTE

Perform steps 13 through 18 for M1113 and steps 12 through 15 and 18 for M1114.

12. Remove nut (23) and fuel filter drain valve (24) from left splash shield (3).
13. Remove four screws (19), washers (21), and lockwashers (20) from plate (22) and left splash shield (3). Discard lockwashers (20).
14. Remove locknut (1), two washers (2), and screw (16) from support bracket (17) and left splash shield (3). Discard locknut (1).
15. Remove locknut (7), two washers (8), and screw (10) from master cylinder bracket (9) and left splash shield (3). Discard locknut (7).
16. Remove locknut (5), two washers (6), and screw (11) from left splash shield (3) and airlift bracket (4). Discard locknut (5).
17. Remove screw (12) and lockwasher (13) from left splash shield (3) and airlift bracket (4). Discard lockwasher (13).
18. Remove locknut (28), screw (25), clamp (26), and harness (27) from left splash shield (3). Remove left splash shield (3) from vehicle. Discard locknut (28).

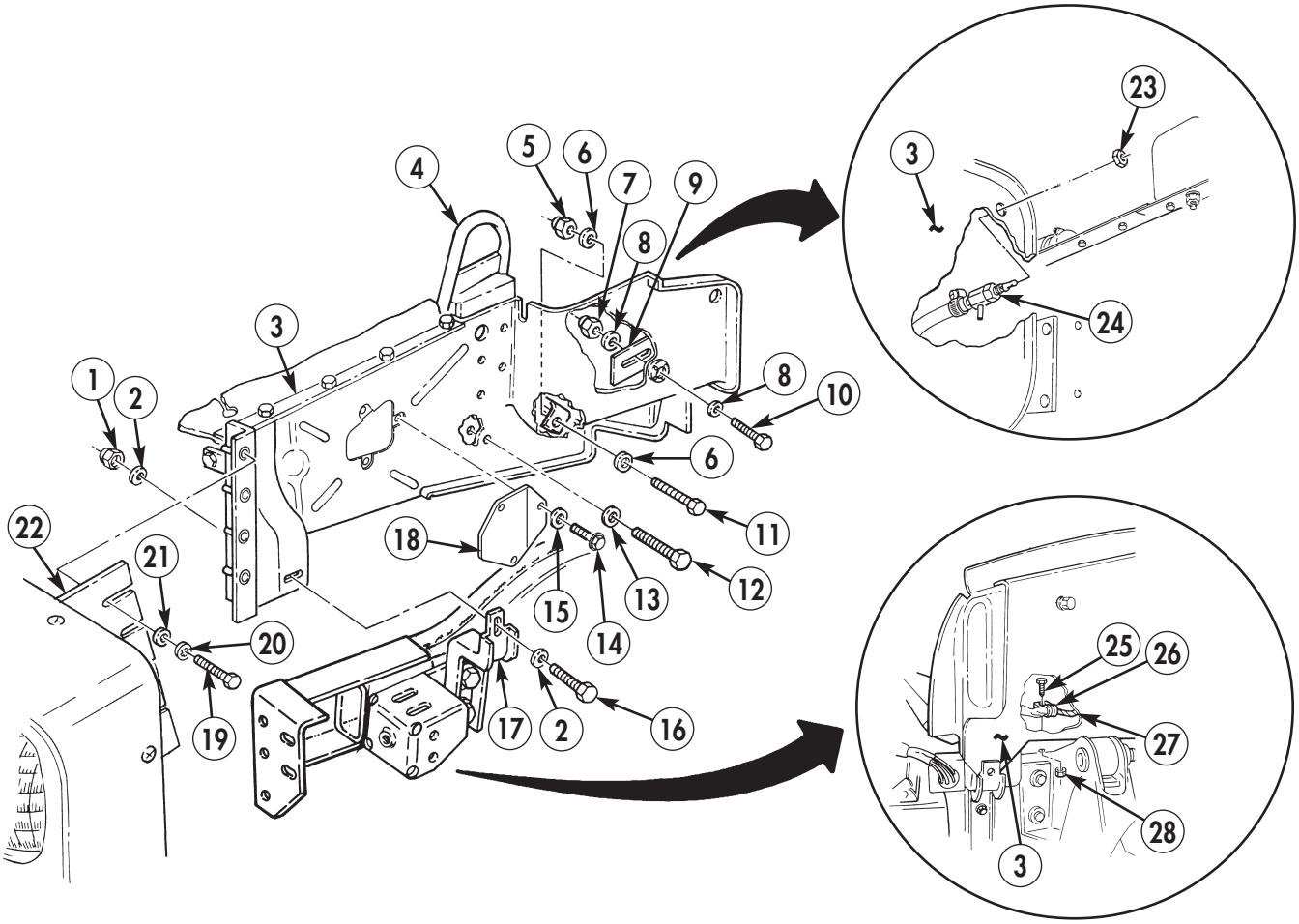

3-84. DIFFERENTIAL COOLER LINES REPLACEMENT (SERIAL NUMBERS 188974 AND BELOW (Cont'd)

19. Remove hose clamp (31) and hose (32) from outlet port (30) on power steering cooler (29).
20. Disconnect hose (32) from tee (36) on upper tube (37) on front intermediate crossmember (38).
21. Disconnect tee (36) from upper tube (37).
22. Disconnect tee (36) from hose (34).
23. Remove tiedown strap (33) from hose (34) and elbow (35). Discard tiedown strap (33).

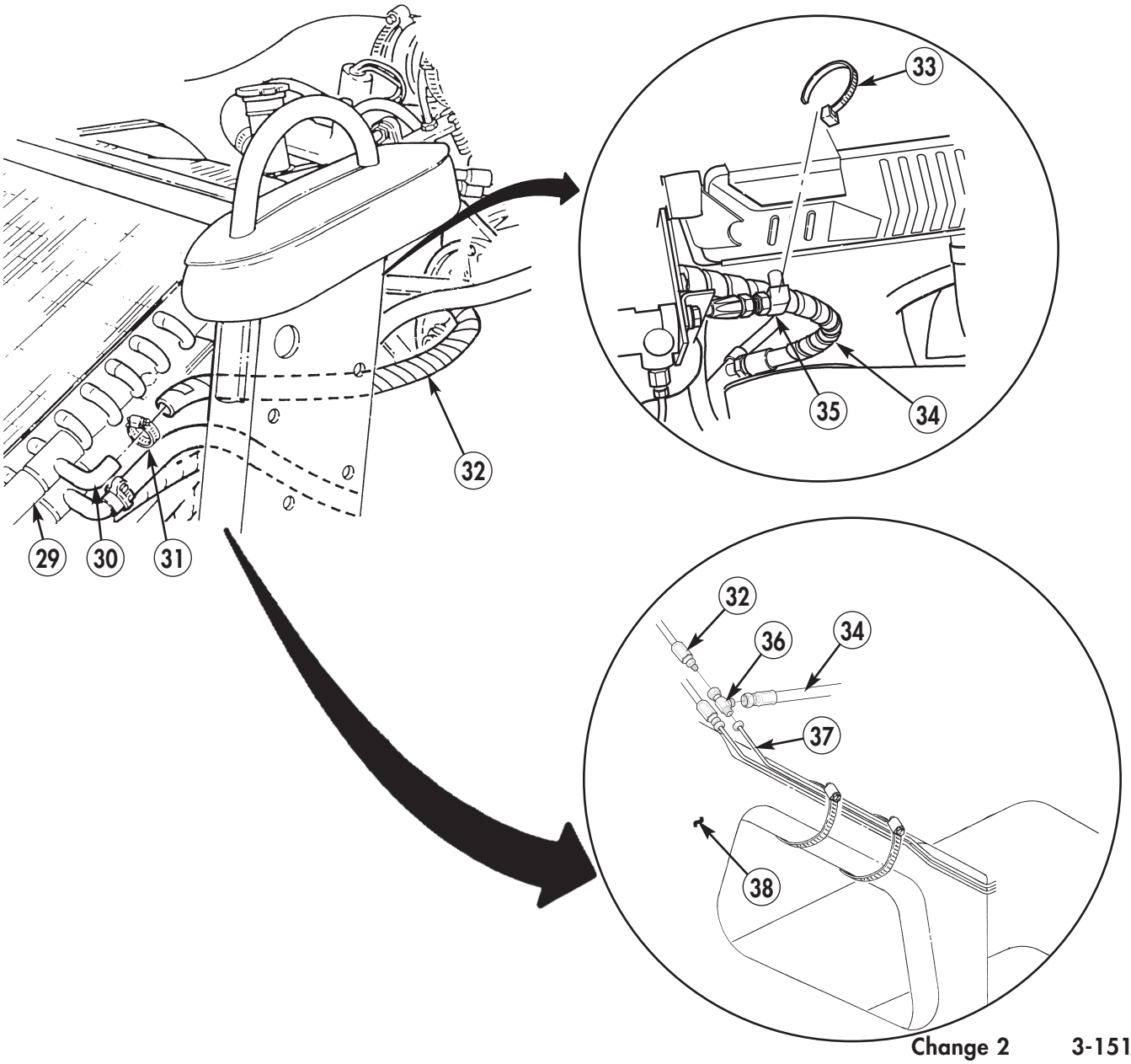

3-84. DIFFERENTIAL COOLER LINES REPLACEMENT (SERIAL NUMBERS 188974 AND BELOW) (Cont'd)

24. Disconnect hose (1) from adapter (5) on hydraulic control valve (4).
25. Remove adapter (5) from hydraulic control valve (4).
26. Disconnect hose (1) from lower tube (2) on intermediate crossmember (3).

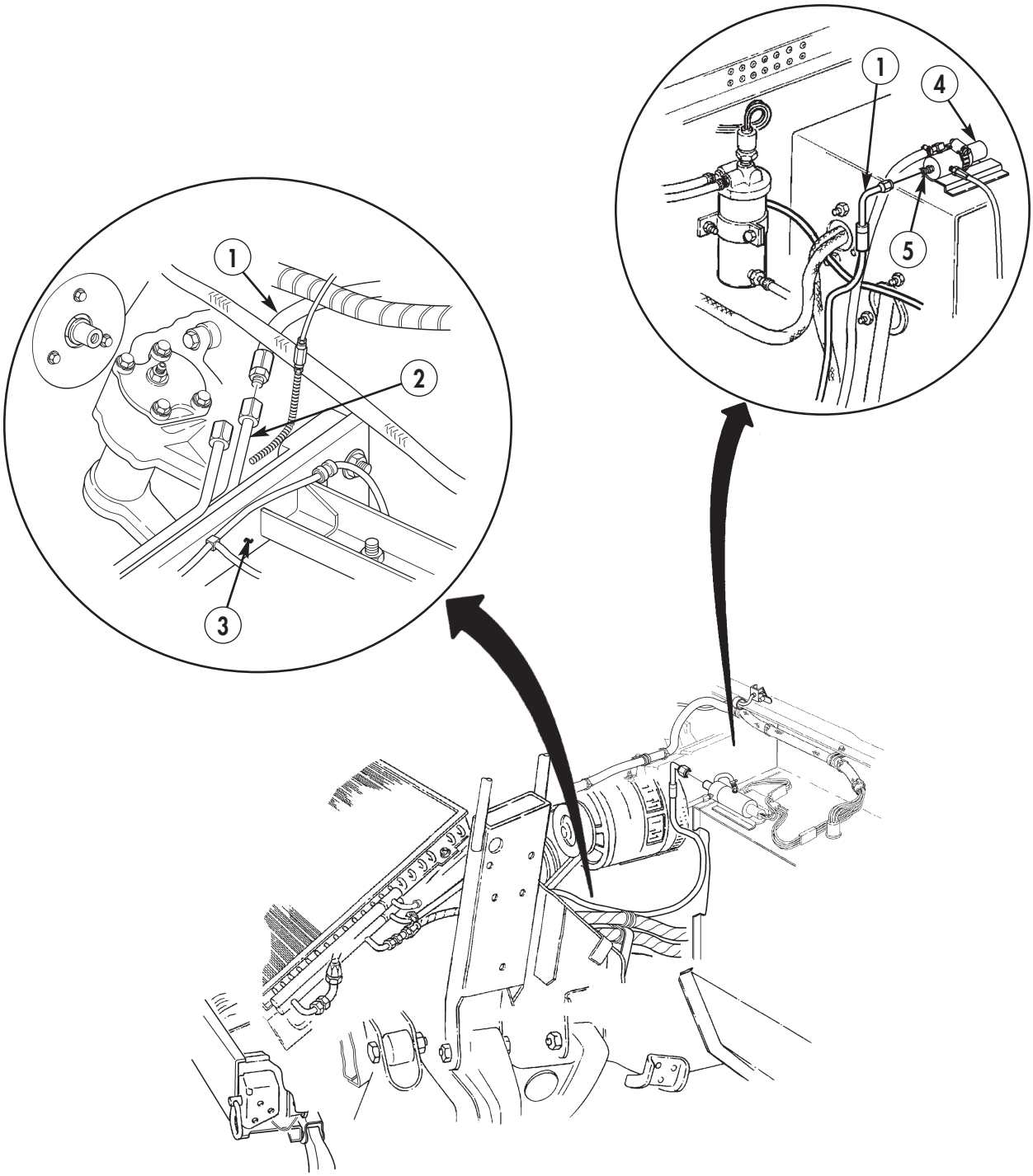

3-84. DIFFERENTIAL COOLER LINES REPLACEMENT (SERIAL NUMBERS 188974 AND BELOW (Cont'd)

b. Oil Cooler Hoses and Tubes Removal

WARNING

Allow differential to cool before performing this task. Severe injury to personnel may result.

CAUTION

Cover or plug all hoses and connections immediately after disconnection to prevent contamination. Remove all plugs prior to connection.

NOTE

- Have drainage container ready to catch oil.
- For ease of identification during installation, tag with tape all tube ends that route to the left port on the rear differential oil cooler. Left port is inlet side.

1. Remove two hose clamps (1) from front intermediate crossmember (8) and tubes (3) and (7).
2. Disconnect tube (7) from union (6) on tube (5).
3. Disconnect tube (3) from union (6) on tube (4).
4. Remove tubes (3) and (7) from right frame rail (2) and front intermediate crossmember (8).

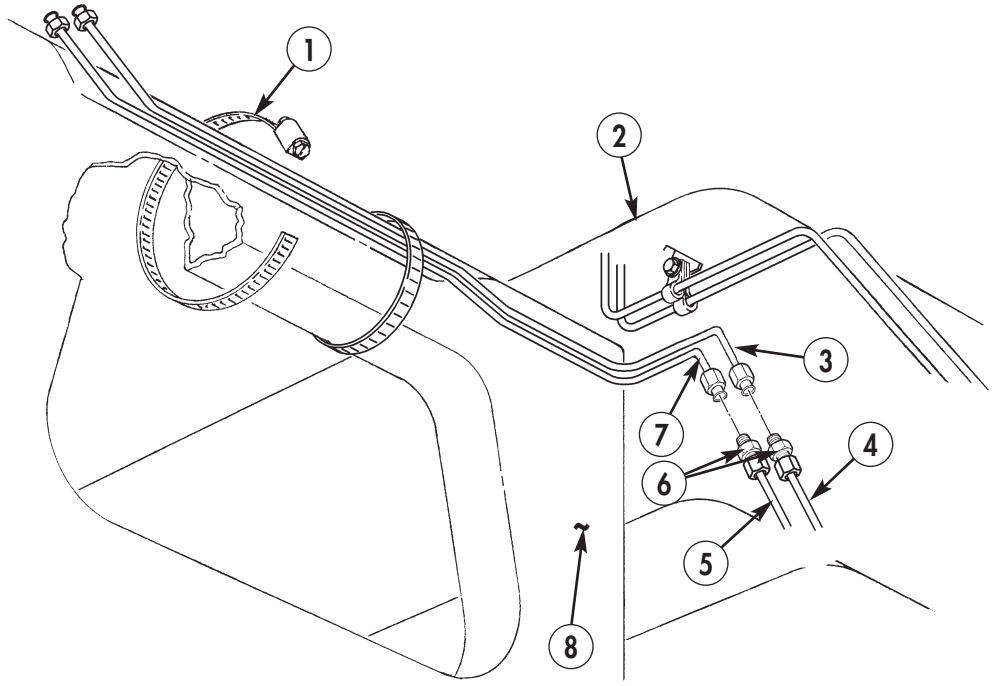

3-84. DIFFERENTIAL COOLER LINES REPLACEMENT (SERIAL NUMBERS 188974 AND BELOW) (Cont'd)

5. Remove two nuts (3), washers (4), screws (10), and washers (4) from clamps (2).
6. Remove tubes (7) and (8) and two clamps (2) from lower transmission oil cooler lines (11).
7. Disconnect tubes (7) and (8) from hoses (5) and (6).
8. Remove unions (1) from tubes (7) and (8).

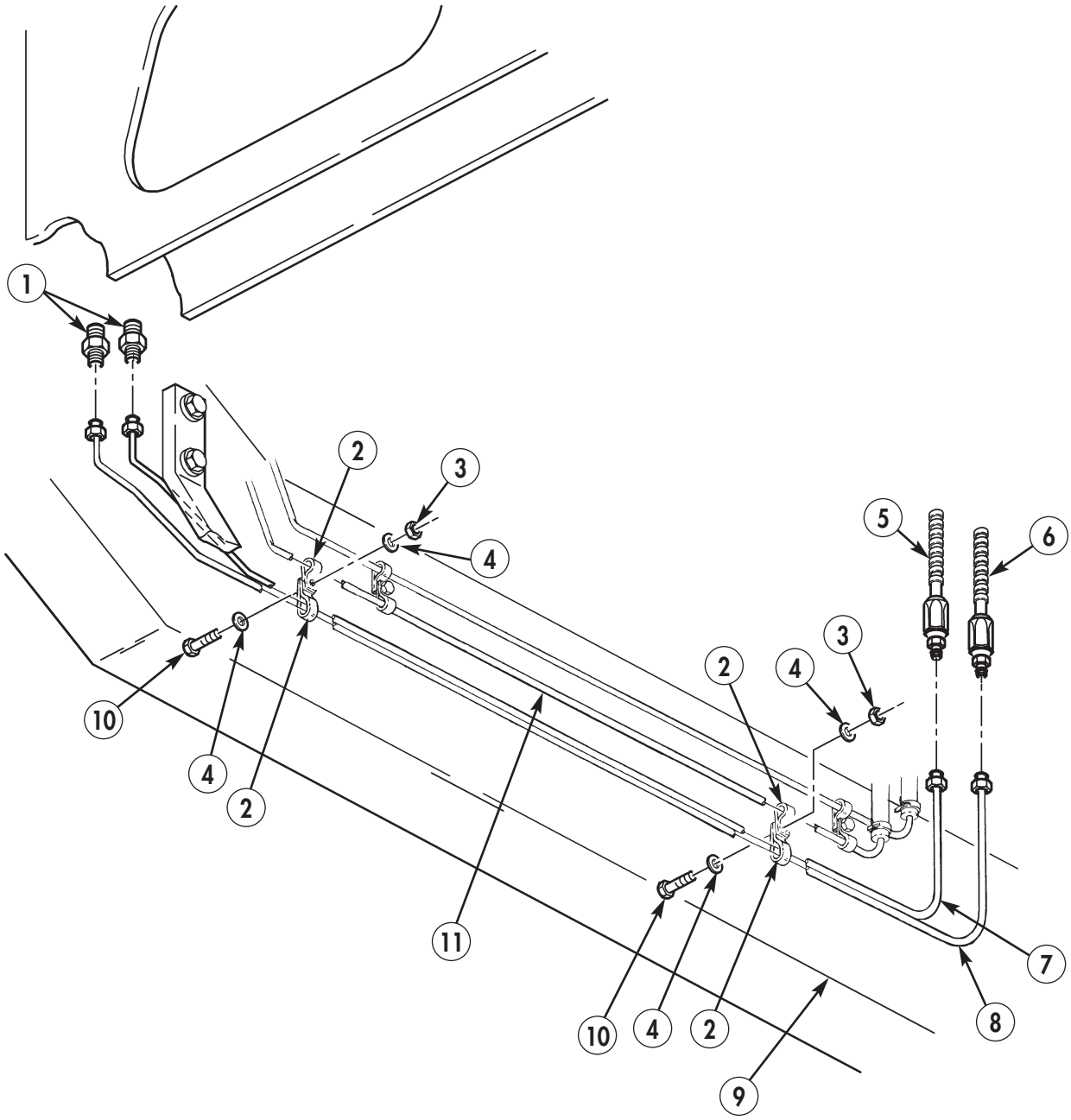

3-84. DIFFERENTIAL COOLER LINES REPLACEMENT (SERIAL NUMBERS 188974 AND BELOW) (Cont'd)

9. Remove bolt (21), washer (22), and two spacers (12) from two clamps (20) and front tunnel support brace (13).
10. Remove tapping screw (19) and washer (18) from two clamps (20) and rear tunnel support brace (15).
11. Remove tapping screw (19) and washer (18) from two clamps (20) and center tunnel support brace (14).
12. Remove six clamps (20) from tubes (16) and (17).

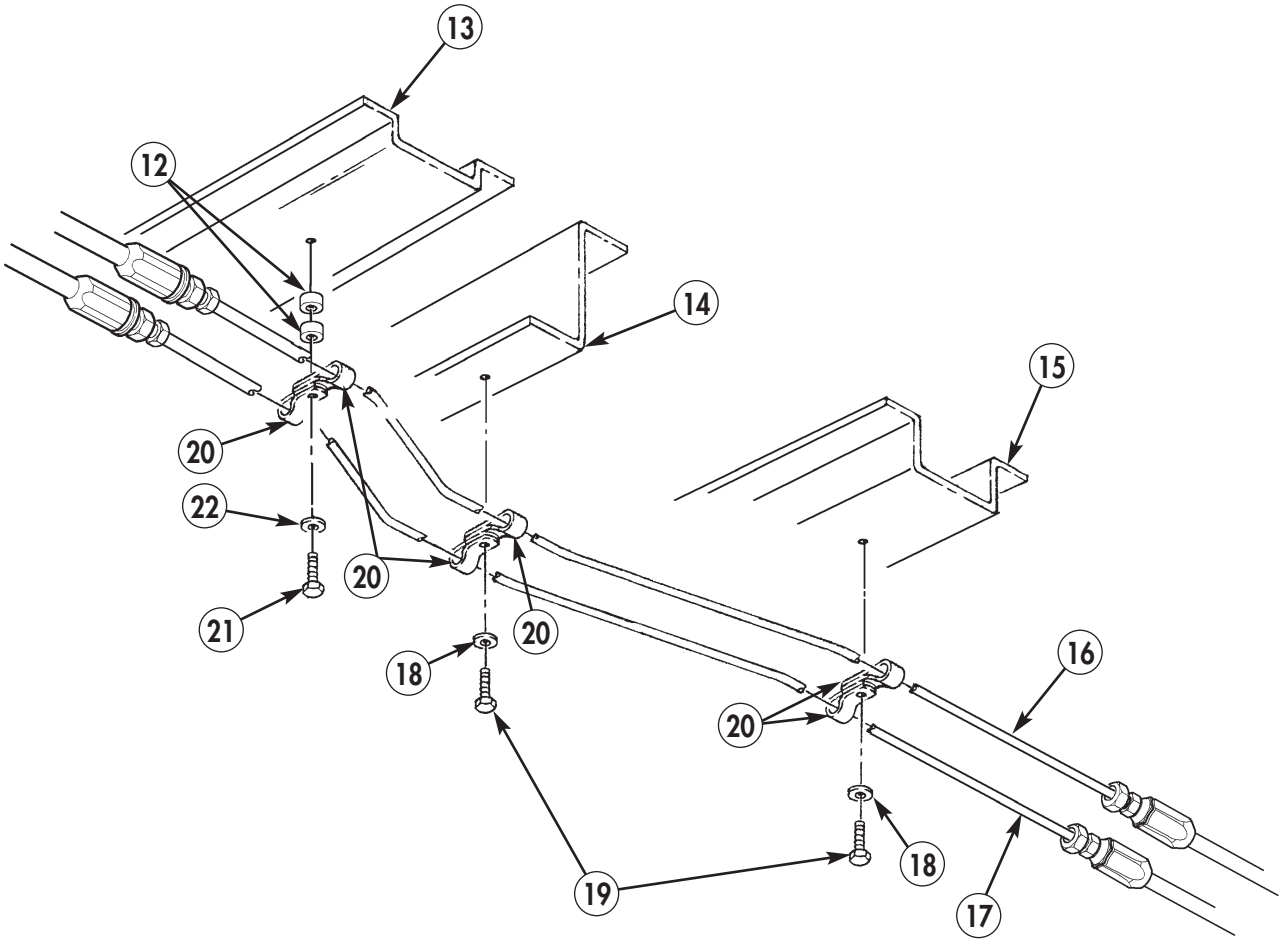

3-84. DIFFERENTIAL COOLER LINES REPLACEMENT (SERIAL NUMBERS 188974 AND BELOW) (Cont'd)

13. Pull hoses (1) and (2) towards rear of vehicle and remove three tiedown straps (3) from hoses (1) and (2). Discard tiedown straps (3).

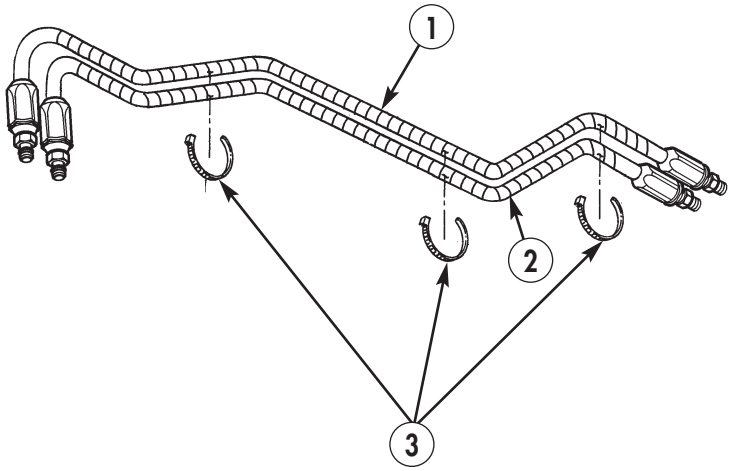

3-84. DIFFERENTIAL COOLER LINES REPLACEMENT (SERIAL NUMBERS 188974 AND BELOW (Cont'd)

14. Disconnect tube (7) from right-hand hose (2) and remove right-hand hose (2) from vehicle.
15. Disconnect tube (4) from left-hand hose (1) and remove left-hand hose (1) from vehicle.
16. Remove tiedown strap (13) from differential support brace (8) and hoses (5) and (6). Discard tiedown strap (13).
17. Disconnect hose (6) and remove O-ring (9) from right port (10) on cooler cover assembly (11). Discard O-ring (9).
18. Disconnect hose (5) and remove O-ring (9) from left port (12) on cooler cover assembly (11). Discard O-ring (9).
19. Remove hose (6) and tube (7) from vehicle.
20. Remove hose (5) and tube (4) from vehicle.

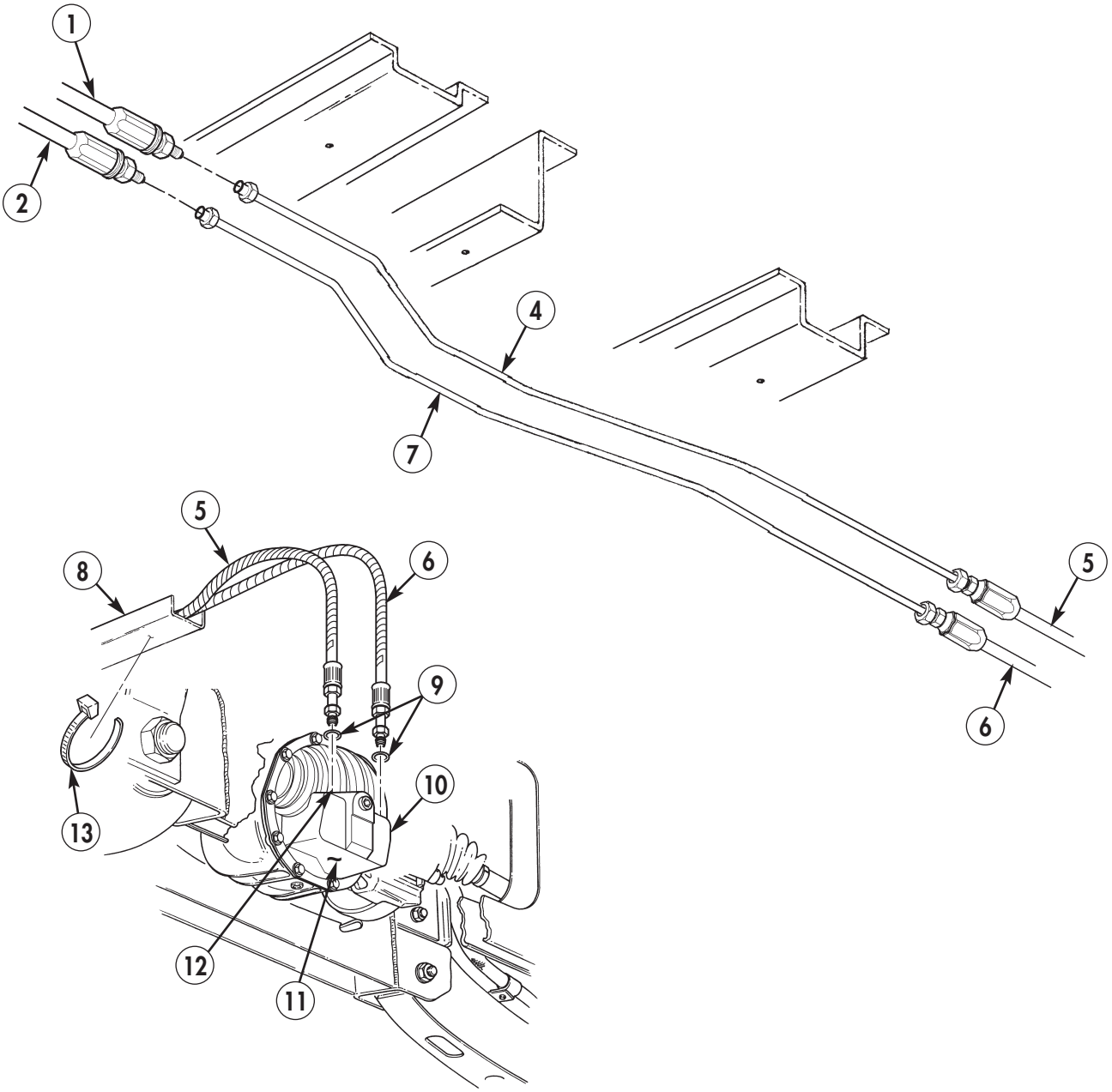

3-84. DIFFERENTIAL COOLER LINES REPLACEMENT (SERIAL NUMBERS 188974 AND BELOW) (Cont'd)

21. Disconnect hose (4) from tube (1).
22. Disconnect hose (3) from tube (2).

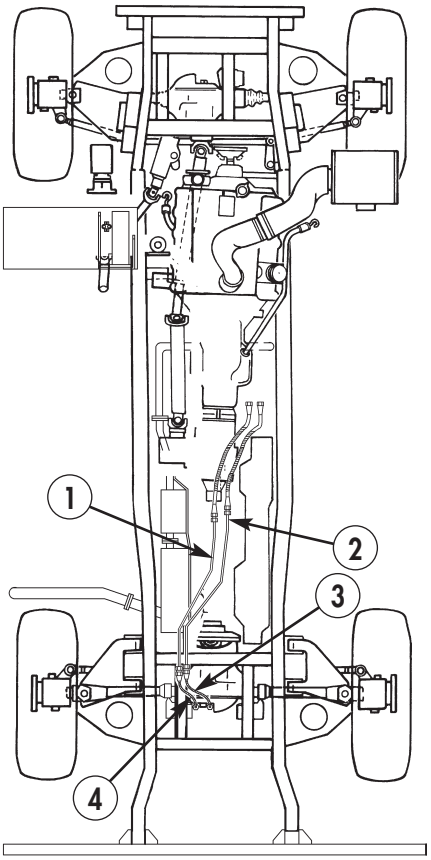

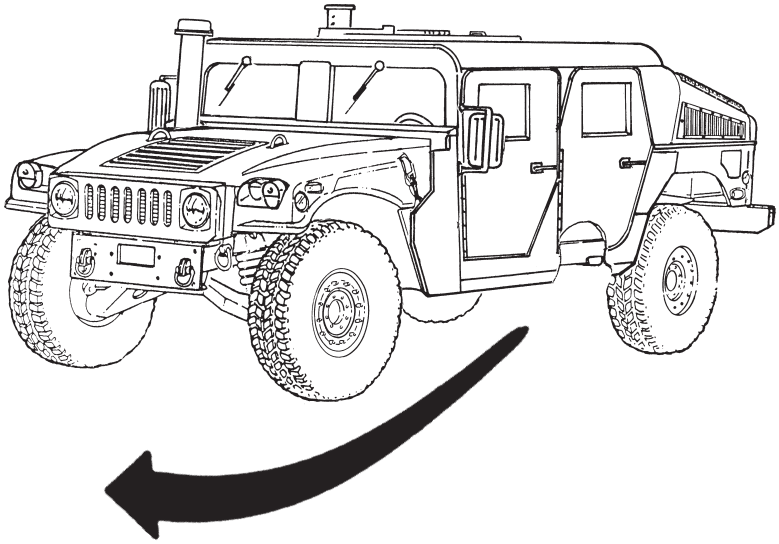

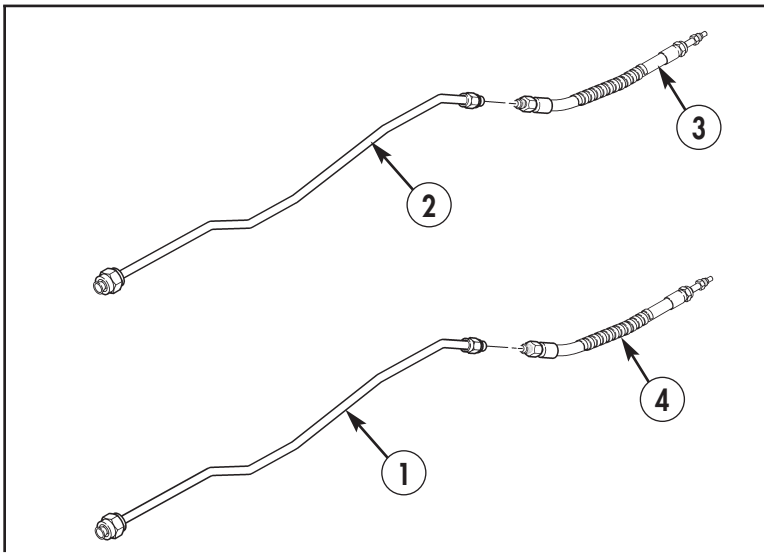

3-84. DIFFERENTIAL COOLER LINES REPLACEMENT (SERIAL NUMBERS 188974 AND BELOW (Cont'd)

c. Oil Cooler Hoses and Tubes Installation

NOTE

Remove all protective caps and plugs from tubes and hoses prior to connecting.

1. Connect hose (3) to tube (4).
2. Connect hose (2) to tube (1).
3. Route hose (3) and tube (4) over rear crossmember (5) and along rear differential support brace (6).
4. Route hose (2) and tube (1) over rear crossmember (5) and along rear differential support brace (6).

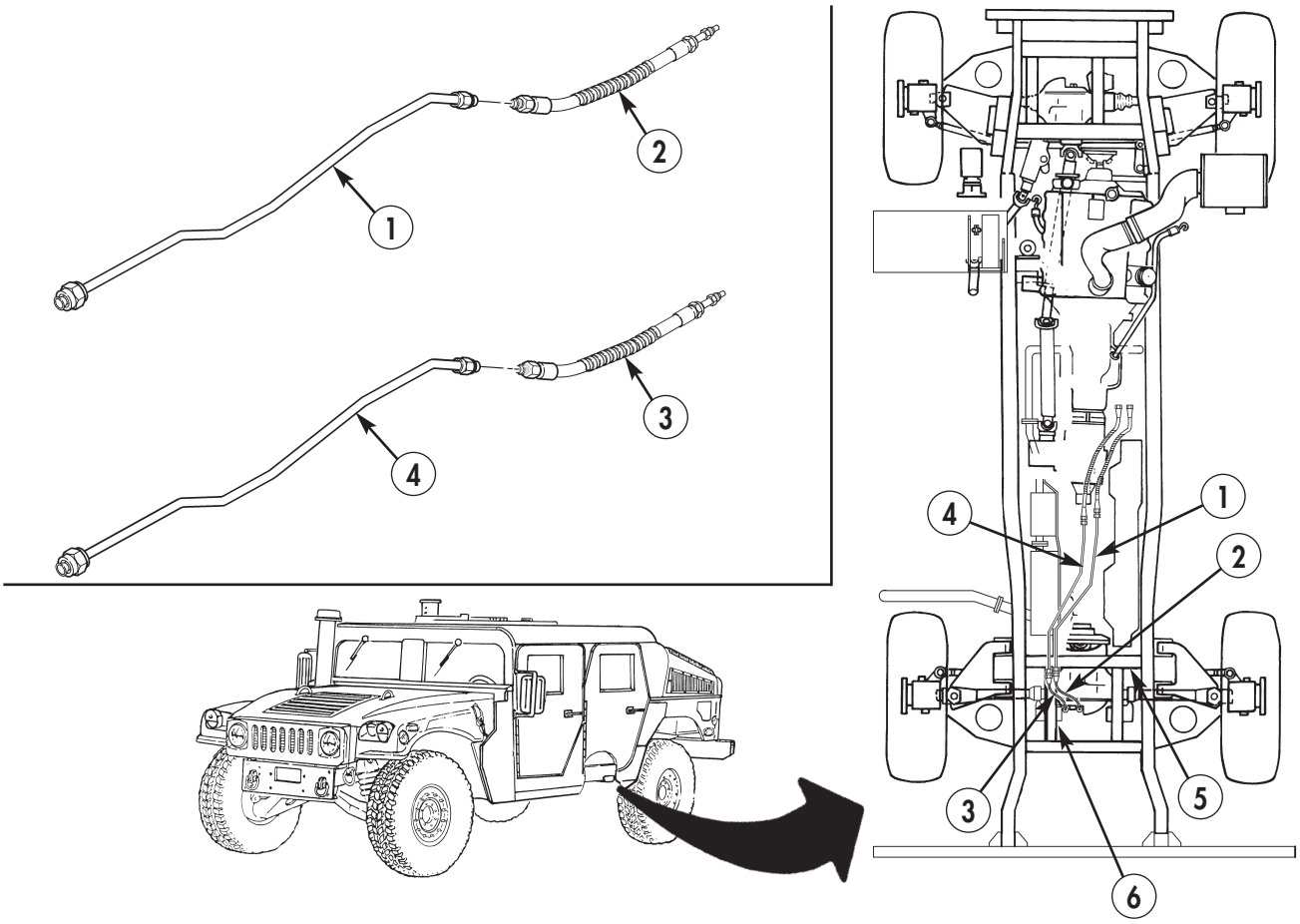

3-84. DIFFERENTIAL COOLER LINES REPLACEMENT (SERIAL NUMBERS 188974 AND BELOW) (Cont'd)

NOTE

Ensure hoses have O-rings installed on ends that connect to cooler cover assembly.

5. Connect hose (1) and O-ring (7) to left port (6) on cooler cover assembly (4).
6. Connect hose (2) and O-ring (3) to right port (5) on cooler cover assembly (4).

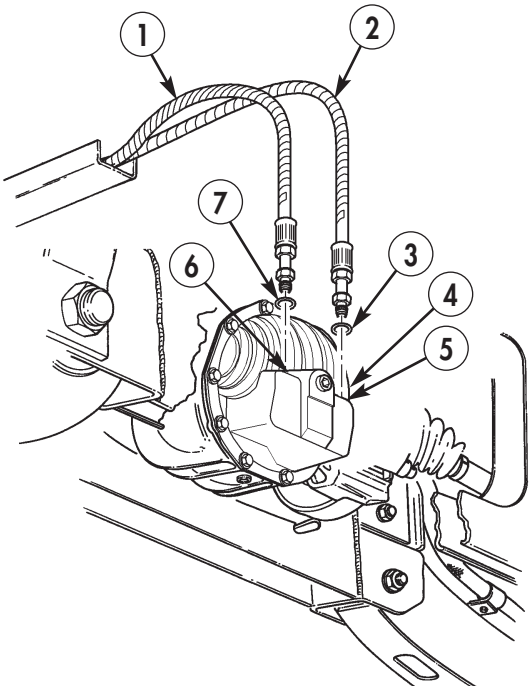

3-84. DIFFERENTIAL COOLER LINES REPLACEMENT (SERIAL NUMBERS 188974 AND BELOW (Cont'd)

7. Route left-hand hose (11) over transfer case and connect to tube (10).
8. Route right-hand hose (8) over transfer case and connect to tube (9).
9. Connect hose (11) to tube (12).
10. Connect hose (8) to tube (13).

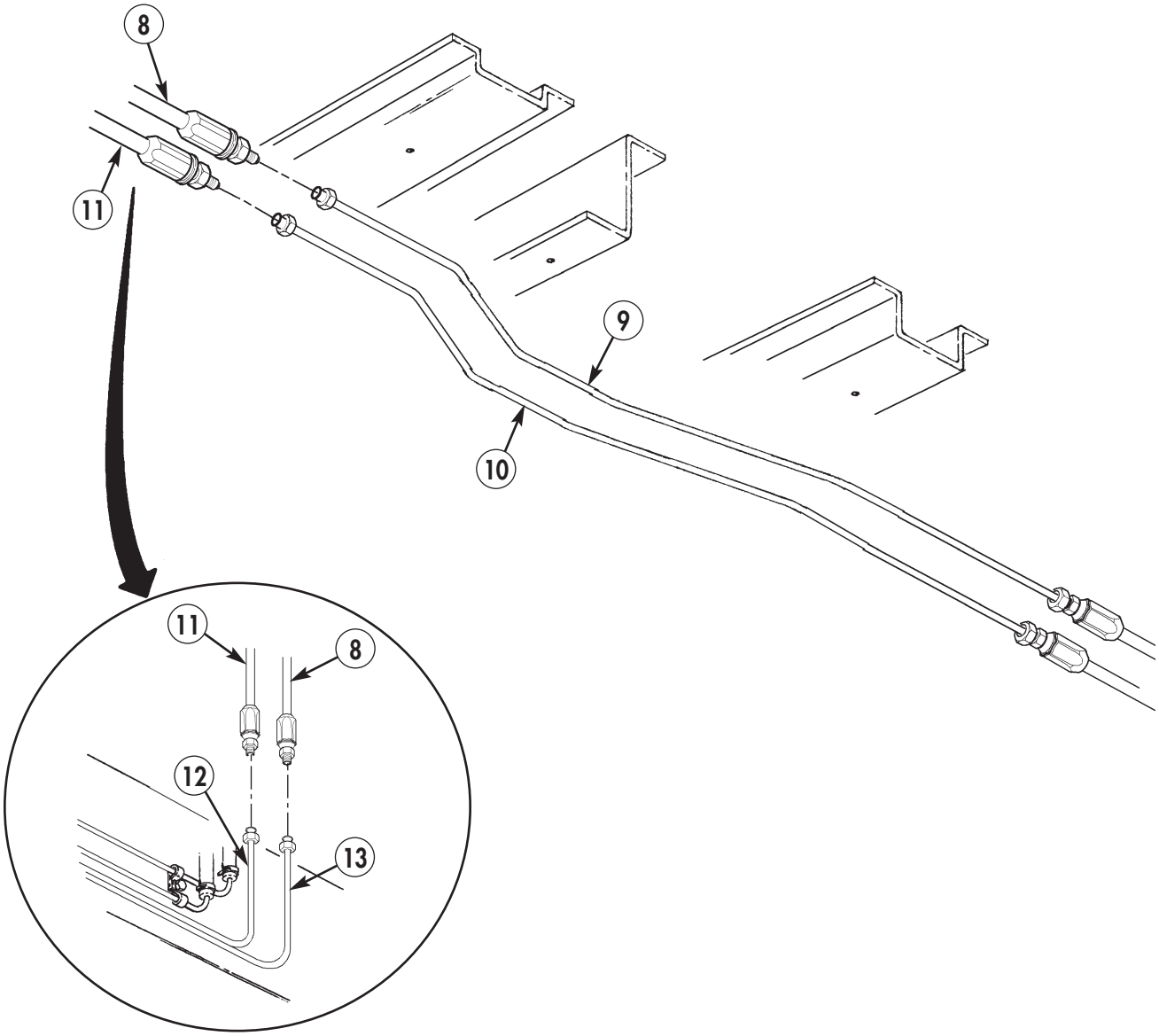

3-84. DIFFERENTIAL COOLER LINES REPLACEMENT (SERIAL NUMBERS 188974 AND BELOW) (Cont'd)

11. Install six clamps (8) on tubes (5) and (6).
12. Secure tubes (5) and (6) to center tunnel support brace (3) with two clamps (8), washer (7), and tapping screw (9).
13. Secure tubes (5) and (6) to rear tunnel support brace (4) with two clamps (8), washer (7), and tapping screw (9).
14. Secure tubes (5) and (6) to front tunnel support brace (2) with two spacers (1), clamps (8), washer (7), and bolt (10).
15. Secure hoses (12) and (13) to differential support brace (11) with tiedown strap (14).
16. Secure hoses (15) and (16) together with three tiedown straps (17).

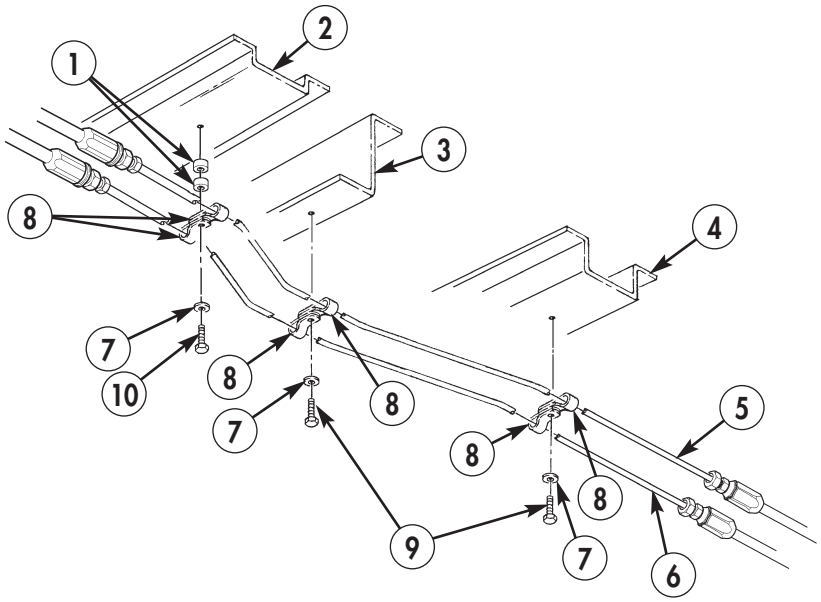

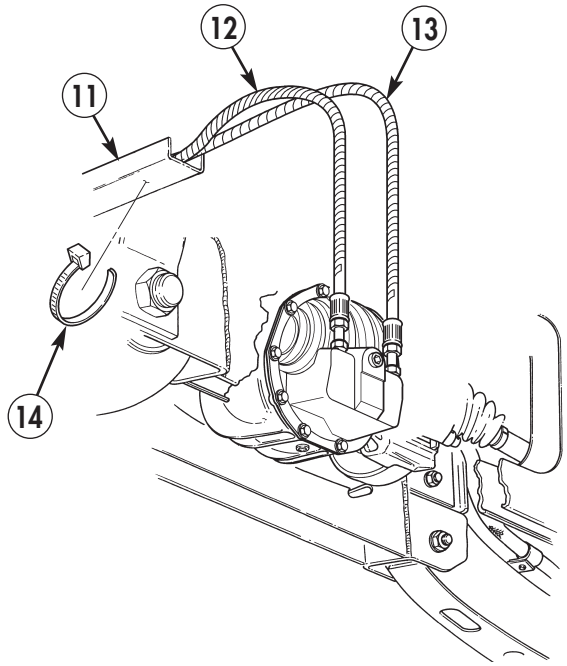

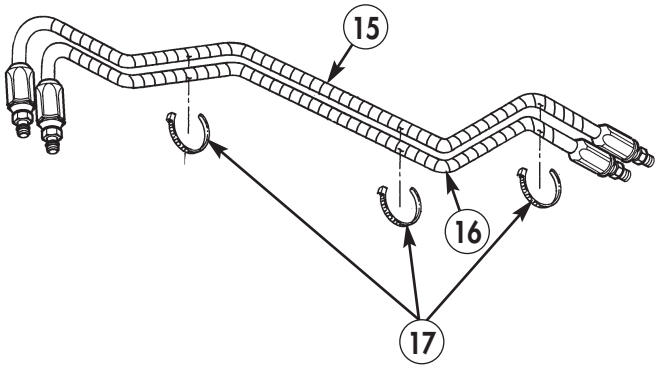

3-84. DIFFERENTIAL COOLER LINES REPLACEMENT (SERIAL NUMBERS 188974 AND BELOW (Cont'd)

17. Install unions (18) on tubes (22) and (23).
18. Install two clamps (19) on tubes (22) and (23).
19. Position tubes (22) and (23) up against right frame rail (24) and under idler arm (27).
20. Secure tubes (22) and (23) and four clamps (19) to lower transmission oil cooler line (26) with two washers (20), screws (25), washers (20), and nuts (21).
21. Connect hoses (15) and (16) to tubes (22) and (23).

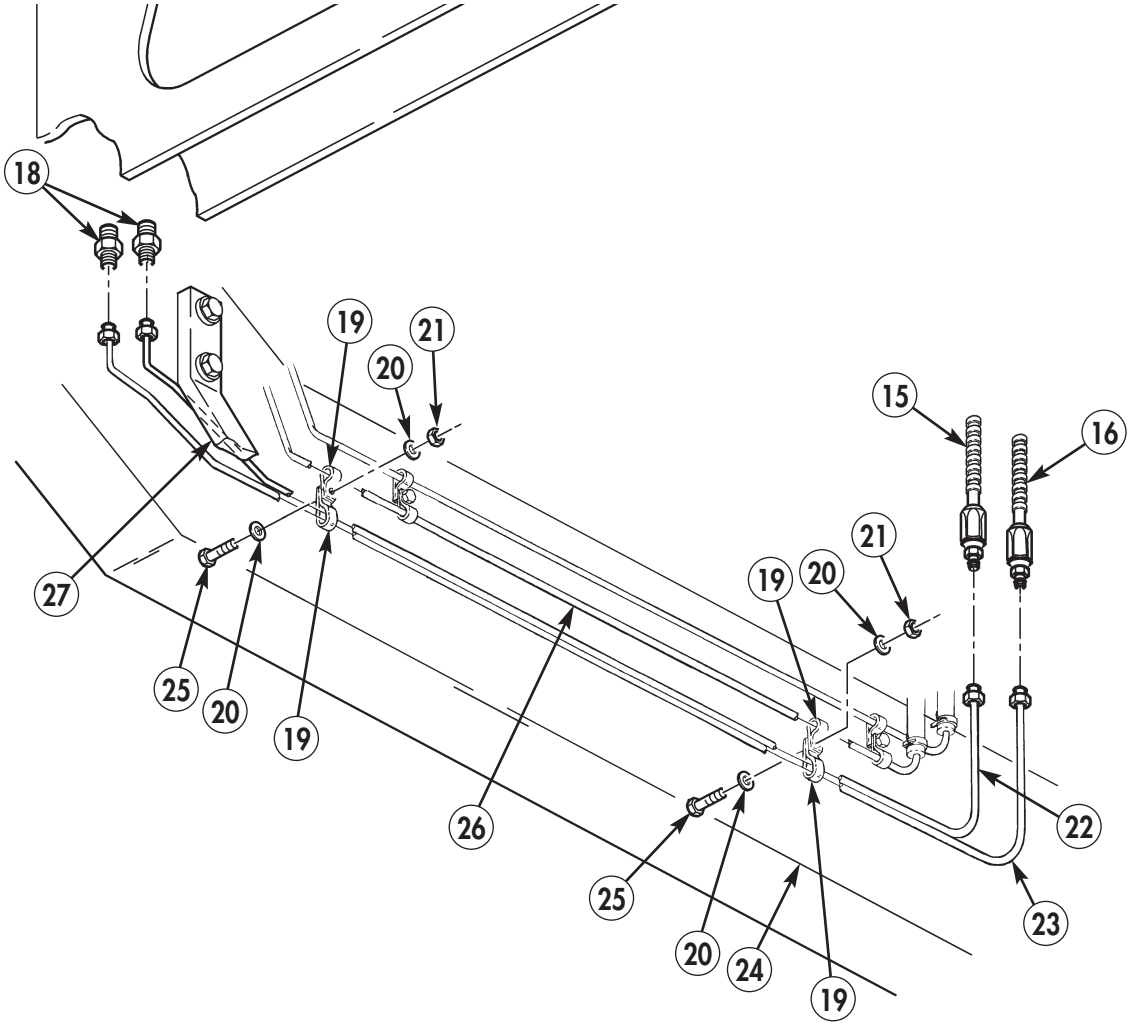

3-84. DIFFERENTIAL COOLER LINES REPLACEMENT (SERIAL NUMBERS 188974 AND BELOW) (Cont'd)

22. Position tubes (3) and (8) adjacent to right frame rail (2) and front intermediate crossmember (6).
23. Connect tube (3) to union (7) on tube (4).
24. Connect tube (8) to union (7) on tube (5).
25. Install two hose clamps (1) on front intermediate crossmember (6) and tubes (3) and (8).

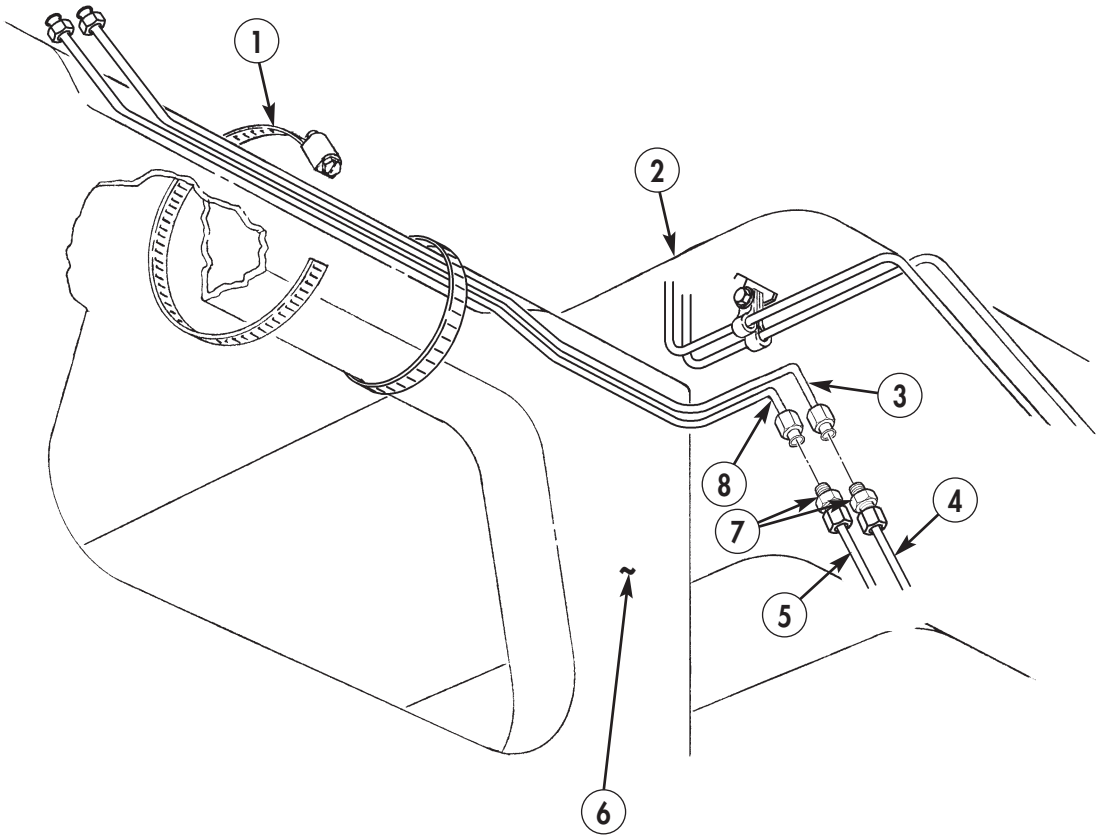

3-84. DIFFERENTIAL COOLER LINES REPLACEMENT (SERIAL NUMBERS 188974 AND BELOW (Cont'd)

d. Front Hoses and Relief Valve Installation

NOTE

Remove all protective caps and plugs from tubes and hoses prior to connecting.

1. Connect hose (1) to lower tube (2) on front intermediate crossmember (3), and route along left inner cowl (6) to hydraulic control valve (4).

NOTE

Do not apply pipe sealing compound on first two threads of adapter.

2. Apply pipe sealing compound to threads of adapter (5) and install on hydraulic control valve (4).
3. Connect hose (1) to adapter (5) on hydraulic control valve (4).

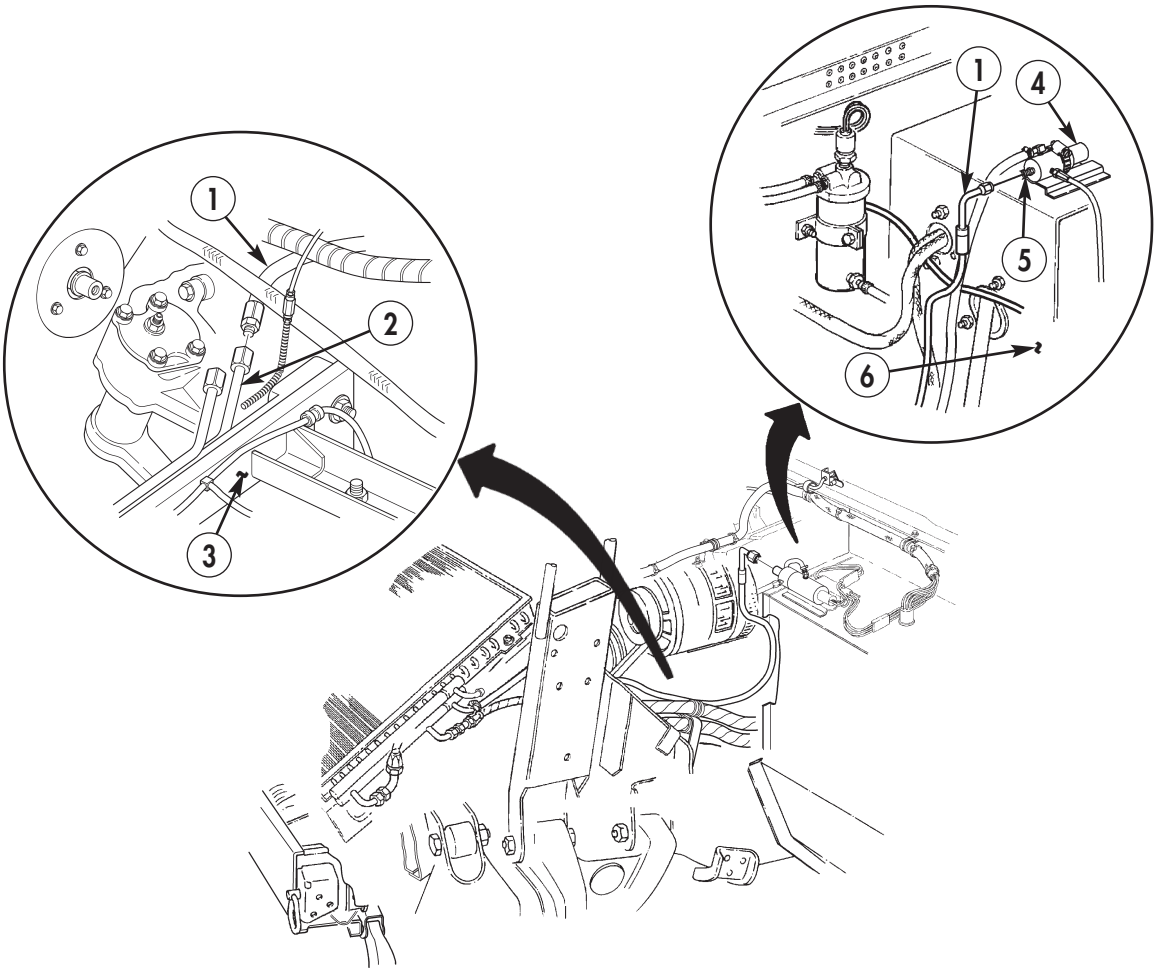

3-84. DIFFERENTIAL COOLER LINES REPLACEMENT (SERIAL NUMBERS 188974 AND BELOW) (Cont'd)

NOTE

Ensure that hose and tee are positioned towards fan shroud and away from moving parts when tightening.

4. Connect tee (6) to hose (3).
5. Connect tee (6) to upper tube (7), and route hose (3) under elbow (4) on fan shroud (5) and under brake limiter bracket (2).
6. Install tiedown strap (1) on hose (3) and fan shroud elbow (4).

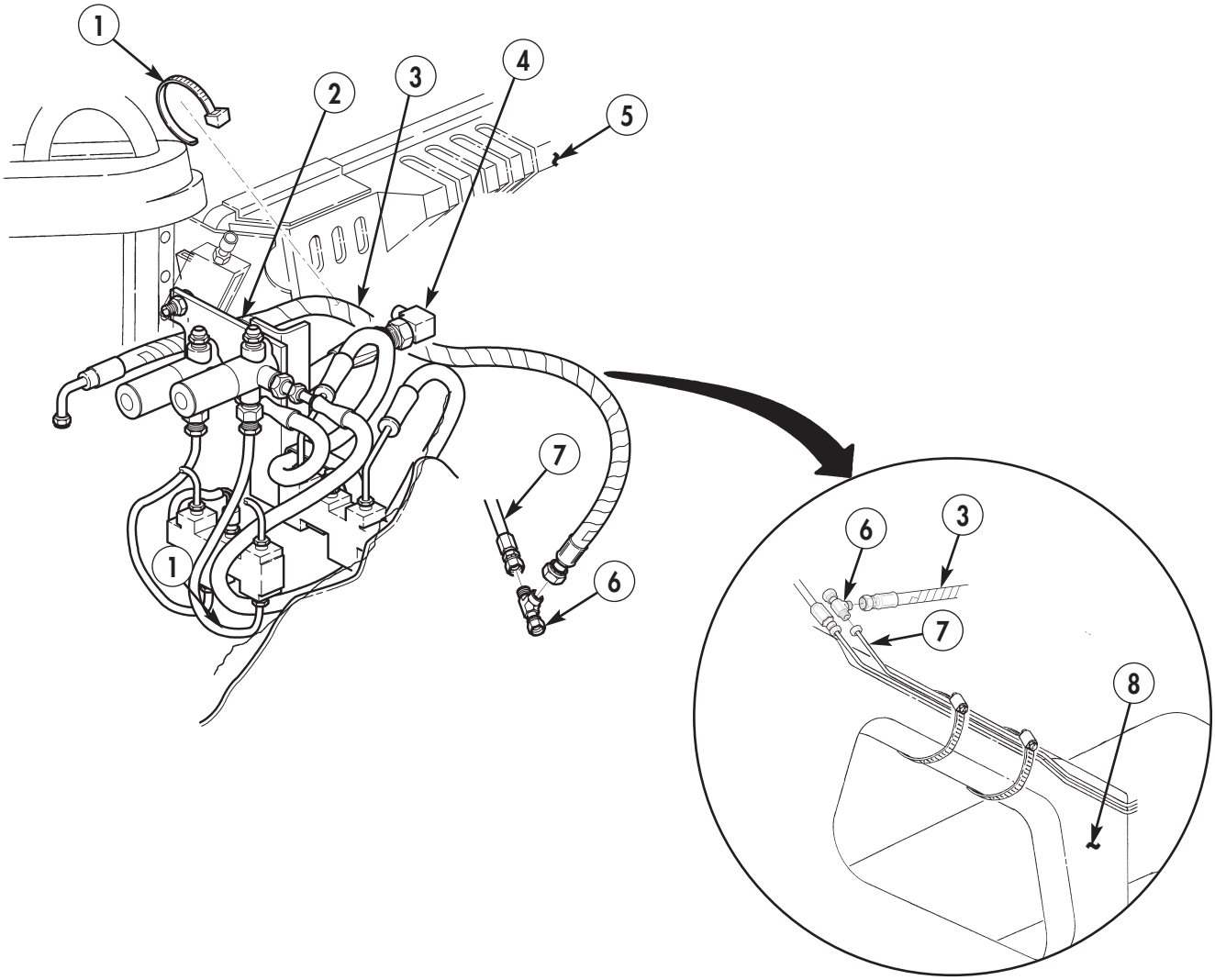

3-84. DIFFERENTIAL COOLER LINES REPLACEMENT (SERIAL NUMBERS 188974 AND BELOW) (Cont'd)

7. Connect hose (12) to tee (6) on upper tube (7) on front intermediate crossmember (8) and route to outlet port (10) on power steering oil cooler (9).
8. Install hose (12) on outlet port (10) with hose clamp (11).

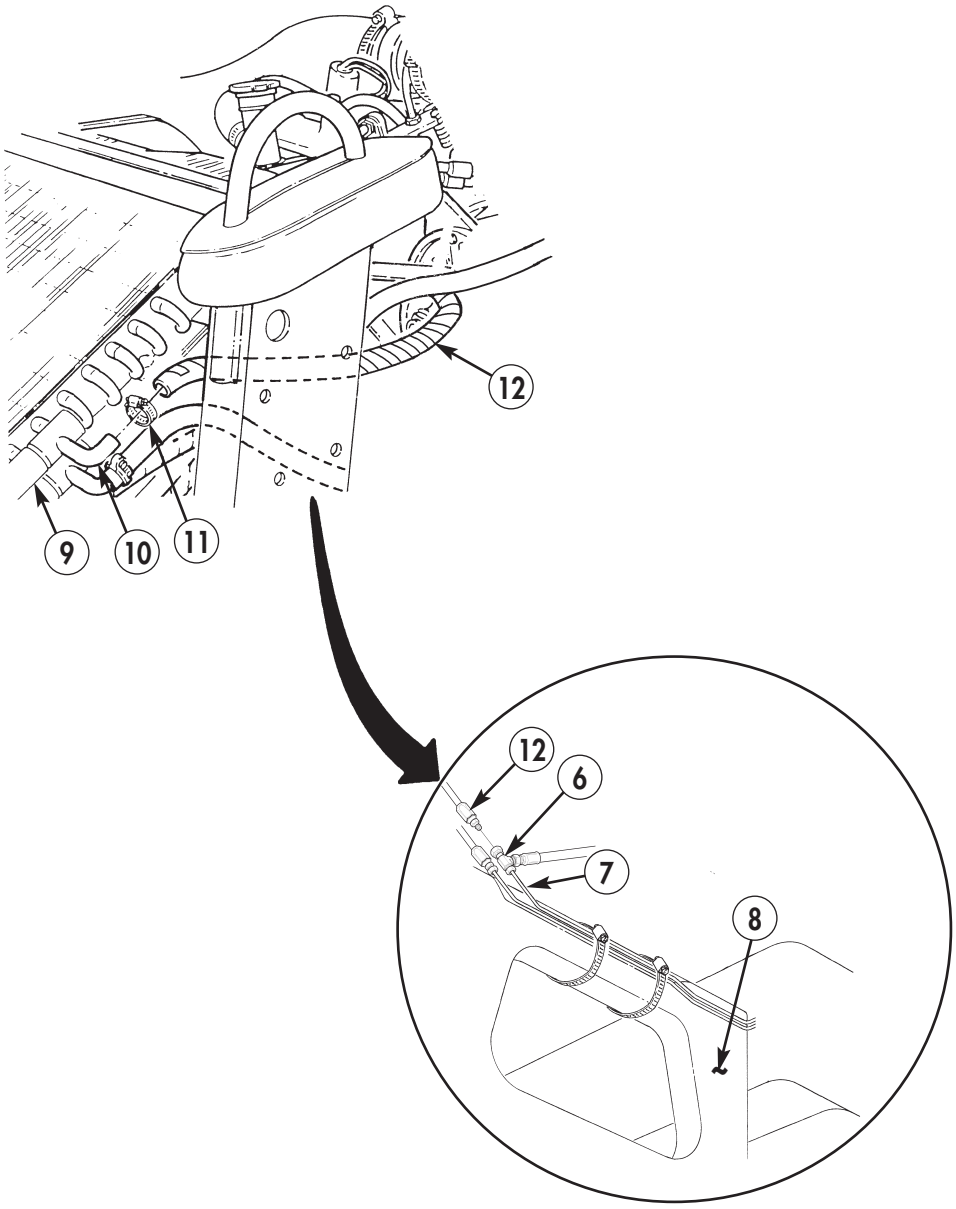

3-84. DIFFERENTIAL COOLER LINES REPLACEMENT (SERIAL NUMBERS 188974 AND BELOW) (Cont'd)

NOTE

Perform steps 9 through 15 and 17 for M1113 and steps 9, 10, and 13 through 17 for M1114.

9. Install left splash shield (3) on vehicle.
10. Install harness (27) and clamp (26) on left splash shield (3) with screw (25) and locknut (28).
11. Install screw (12) and lockwasher (13) on left splash shield (3) and airlift bracket (4).
12. Install screw (11), two washers (6), and locknut (5) on left splash shield (3) and airlift bracket (4).
13. Install left splash shield (3) on master cylinder bracket (9) with two washers (8), screw (10), and locknut (7).
14. Install left splash shield (3) on support bracket (17) with two washers (2), screw (16), and locknut (1).
15. Install left splash shield (3) on plate (22) with four washers (24), lockwashers (20), and screws (19).
16. Install fuel filter drain valve (24) on left splash shield (3) with nut (23).
17. Install access cover (18) on left splash shield (3) with three washers (15) and screws (14).

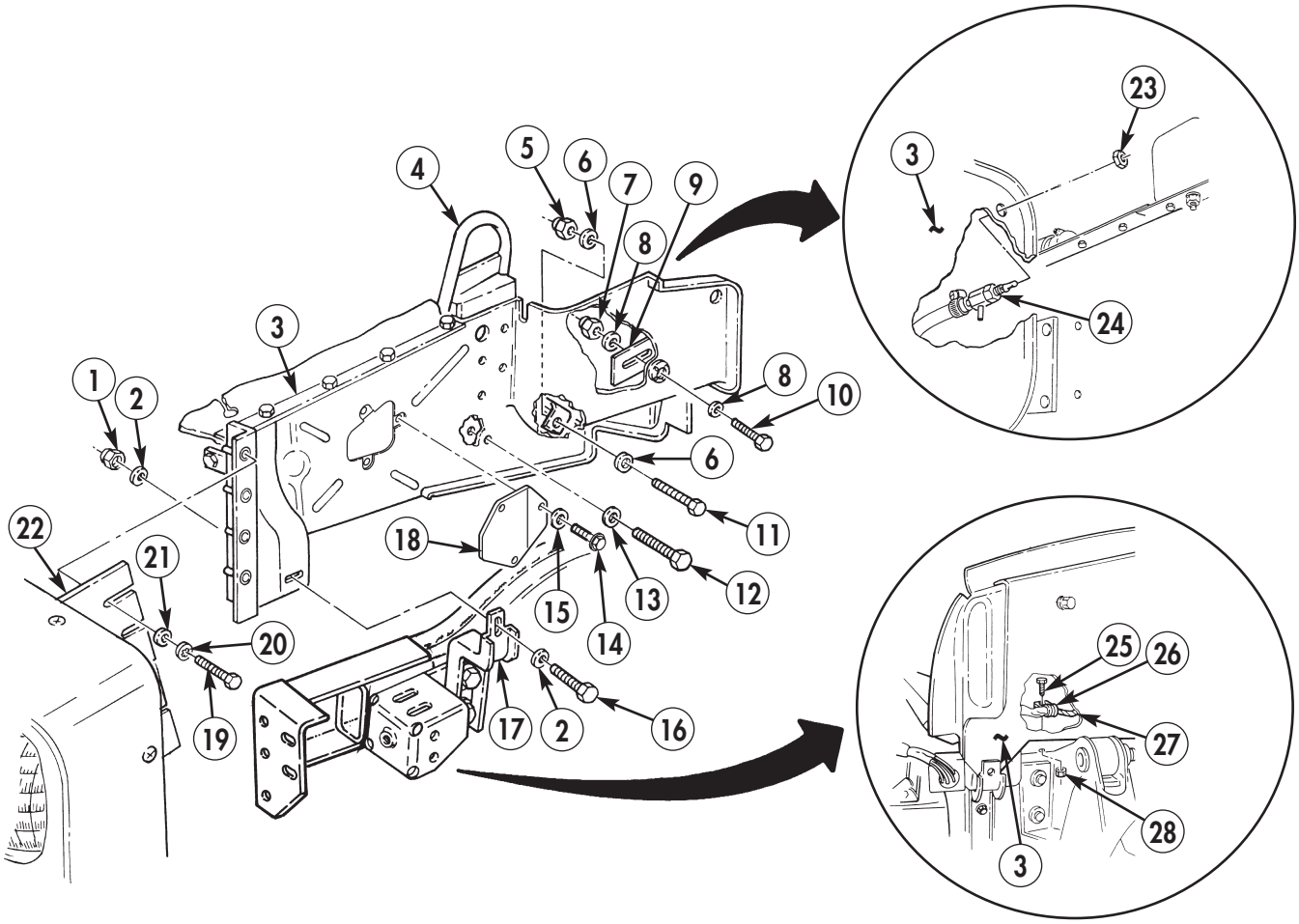

3-84. DIFFERENTIAL COOLER LINES REPLACEMENT (SERIAL NUMBERS 188974 AND BELOW (Cont'd)

18. Install relief valve (32) on splash shield (3) with reinforcement (41), two washers (35), and bolts (36).
19. Install O-ring (42) and union (29) on side of relief valve (32).
20. Install O-ring (34) and union (33) on top of relief valve (32).
21. Install hood prop rod (43) and bracket (44) on left splash shield (3) and airlift bracket (4) with four lockwashers (45) and screws (46).
22. Connect bypass hose (30) to union (29).
23. Connect bypass hose (31) to union (33).
24. Connect bypass hose (30) and return hoses (39) and (40) to tee (38) with three clamps (37).
25. Install clamp (49) on bypass hose (30).
26. Secure clamps (49) and (50) together with bolt (51), washer (48), and locknut (47).

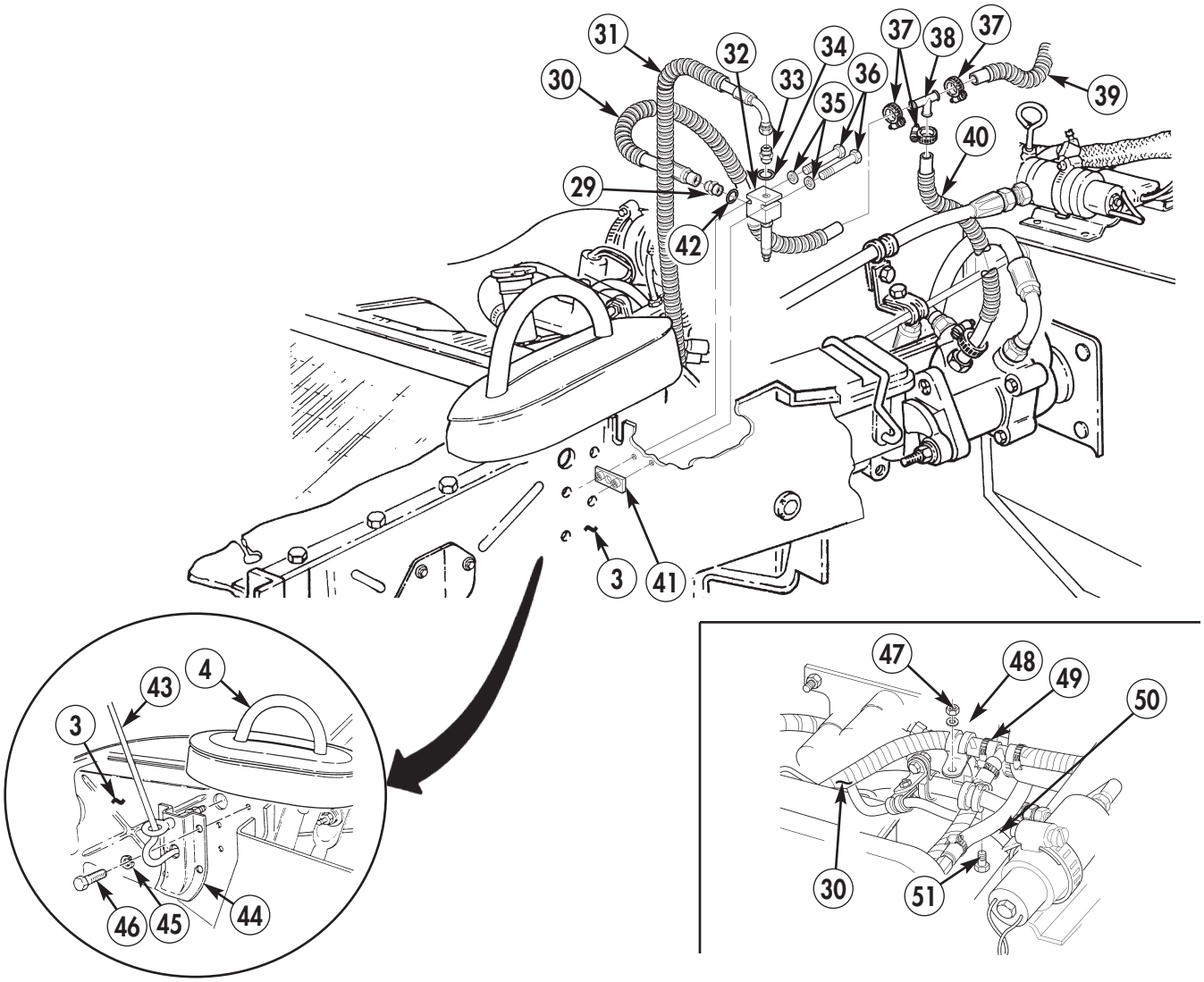

FOLLOW-ON TASKS:
- Install rear propeller shaft (para. 6-4).
- Connect battery ground cables (para. 4-68).
- Install rear brake protection guards (para. 7-11).
- Bleed power steering system (para. 8-27).
- Start engine (TM 9-2320-387-10) and inspect for leaks at engine oil cooler, supply, and return lines.

3-85. DIFFERENTIAL COOLER LINES REPLACEMENT (SERIAL NUMBERS 188975 AND ABOVE)

This task covers:

a. Front Hoses and Relief Valve Removal
b. Oil Cooler Tubes Removal
c. Drilling Hole Locations in Tunnel Support Braces
d. Rear Oil Cooler Hoses and Tubes Installation
e. Oil Cooler Tubes Installation
f. Front Hoses and Relief Valve Installation

INITIAL SETUP:

Tools

General mechanic's tool kit: automotive (Appendix B, Item 1)
Maintenance and repair shop equipment: automotive (Appendix B, Item 2)

Materials/Parts

Sealing compound-pipe (Appendix C, Item 62)
Four lockwashers (Appendix G, Item 146)
Four lockwashers (Appendix G, Item 190.2)
Locknut (Appendix G, Item 87)
Six locknuts (Appendix G,Item 106)
Two O-rings (Appendix G, Item 221)
Tiedown strap (Appendix G, Item 329)
Two O-rings (Appendix G, Item 218)

Manual References

TM 9-2320-387-10
TM 9-2320-387-24P

Equipment Condition

- Rear propeller shaft removed (para. 6-4).
- Battery ground cables disconnected (para. 4-68).
- Rear brake protection guards removed (para. 7-11).

General Safety Instructions

- Allow differential to cool.
- Hood must be supported during hood prop rod and bracket removal.

Maintenance Level

Unit

NOTE

If rear steel differential oil cooler tubes have failed on vehicle serial numbers 188975 and above, perform tasks c. and d. to replace them with flexible differential oil cooler hoses.

a. Front Hoses and Relief Valve Removal

WARNING

Allow differential to cool before performing this task. Severe injury to personnel may result.

CAUTION

Cover or plug all tubes and connections immediately after disconnection to prevent contamination. Remove all plugs prior to connection.

NOTE

Have drainage container ready to catch oil.

1. Remove locknut (1), washer (2), and bolt (4) from clamp (3). Discard locknut (1).
2. Remove clamp (3) from bypass hose (5).
3. Loosen three clamps (12) on tee (13).
4. Disconnect bypass hose (5) and return hoses (14) and (15) from tee (13).
5. Disconnect bypass hose (6) from union (8).
6. Disconnect bypass hose (5) from union (19).
7. Remove union (8) and O-ring (9) from top of relief valve (7). Discard O-ring (9).
8. Remove union (19) and O-ring (18) from side of relief valve (7). Discard O-ring (18).
9. Remove two bolts (11), washers (10), relief valve (7), and reinforcement (16) from splash shield (17).

3-85. DIFFERENTIAL COOLER LINES REPLACEMENT (SERIAL NUMBERS 188975 AND ABOVE) (Cont'd)

WARNING

Hood must be supported during hood prop rod and bracket removal. Failure to support hood may cause injury to personnel or damage to equipment.

10. Remove four screws (24), lockwashers (23), hood prop rod (20), and bracket (22) from left splash shield (17) and airlift bracket (21). Discard lockwashers (23).

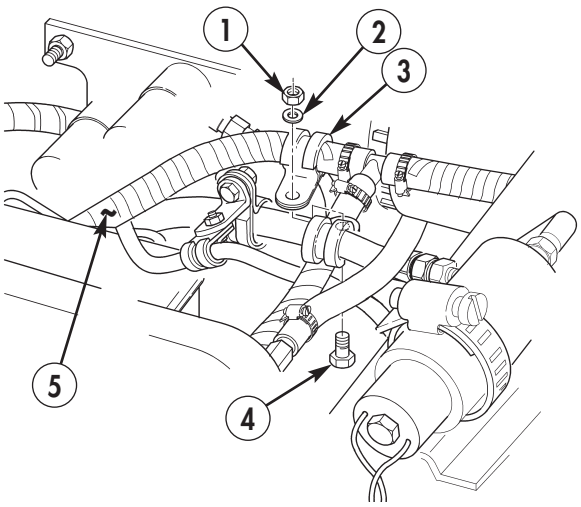

SERIAL NUMBERS 188975 THROUGH 196900

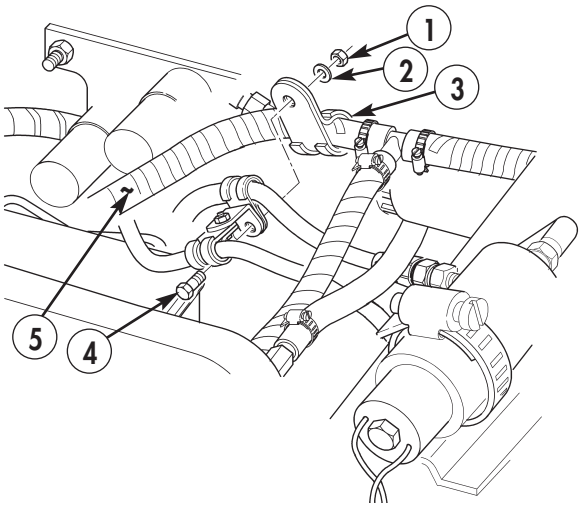

SERIAL NUMBERS 196901 AND ABOVE

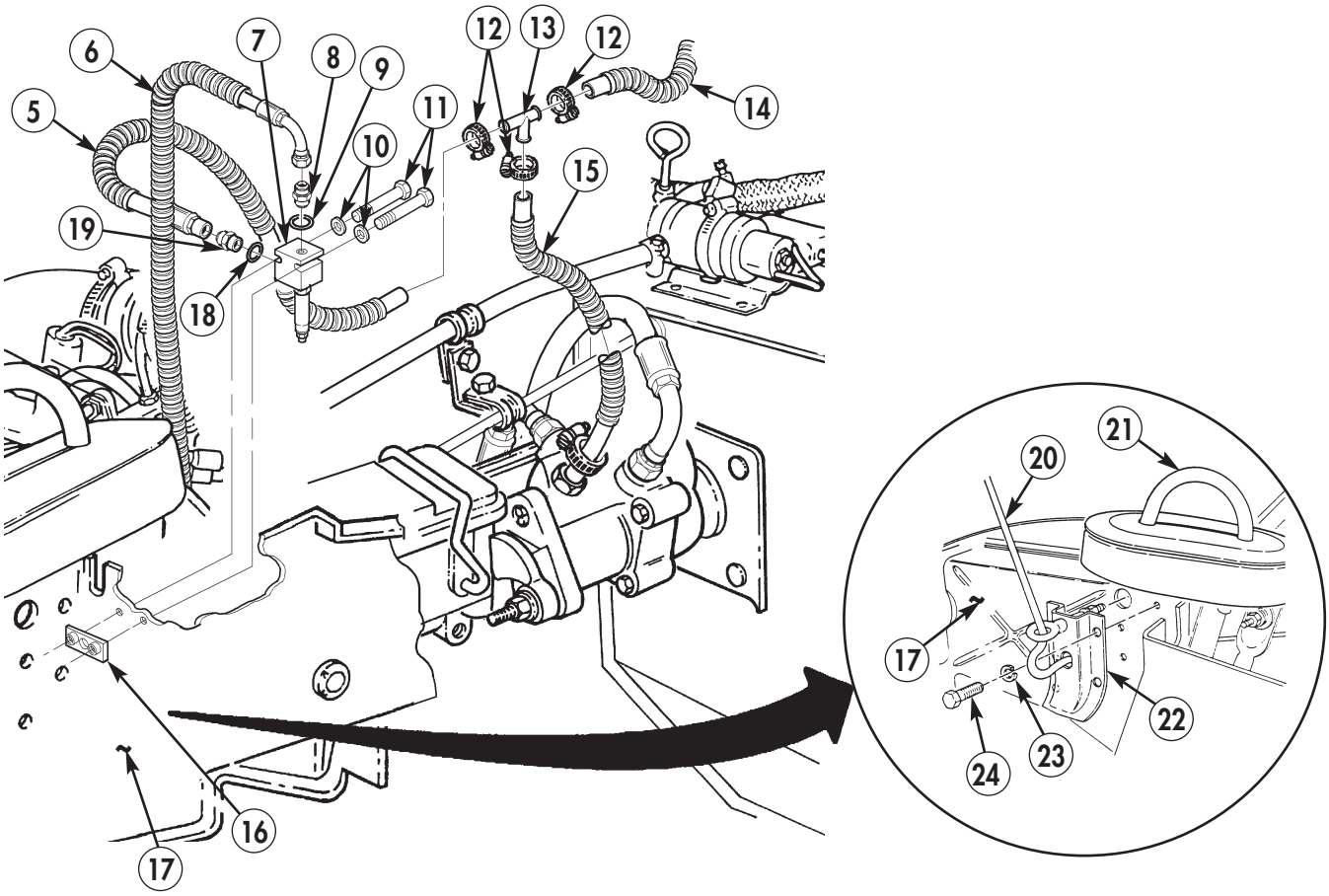

3-85. DIFFERENTIAL COOLER LINES REPLACEMENT (SERIAL NUMBERS 188975 AND ABOVE) (Cont'd)

11. Remove three screws (14), washers (15), and access cover (16) from left splash shield (3).

NOTE

Perform steps 13 through 18 for M1113 and steps 12 through 15 and 18 for M1114.

12. Remove nut (23) and fuel filter drain valve (24) from left splash shield (3).
13. Remove four screws (19), washers (21), and lockwashers (20) from plate (22) and left splash shield (3). Discard lockwashers (20).
14. Remove locknut (1), two washers (2), and screw (17) from support bracket (18) and left splash shield (3). Discard locknut (1).
15. Remove locknut (7), two washers (8), and screw (10) from master cylinder bracket (9) and left splash shield (3). Discard locknut (7).
16. Remove locknut (5), two washers (6), and screw (11) from left splash shield (3) and airlift bracket (4). Discard locknut (5).
17. Remove screw (12) and lockwasher (13) from left splash shield (3) and airlift bracket (4). Discard lockwasher (13).
18. Remove locknut (28), screw (25), clamp (26), and harness (27) from left splash shield (3). Discard locknut (28) and remove left splash shield (3) from vehicle.

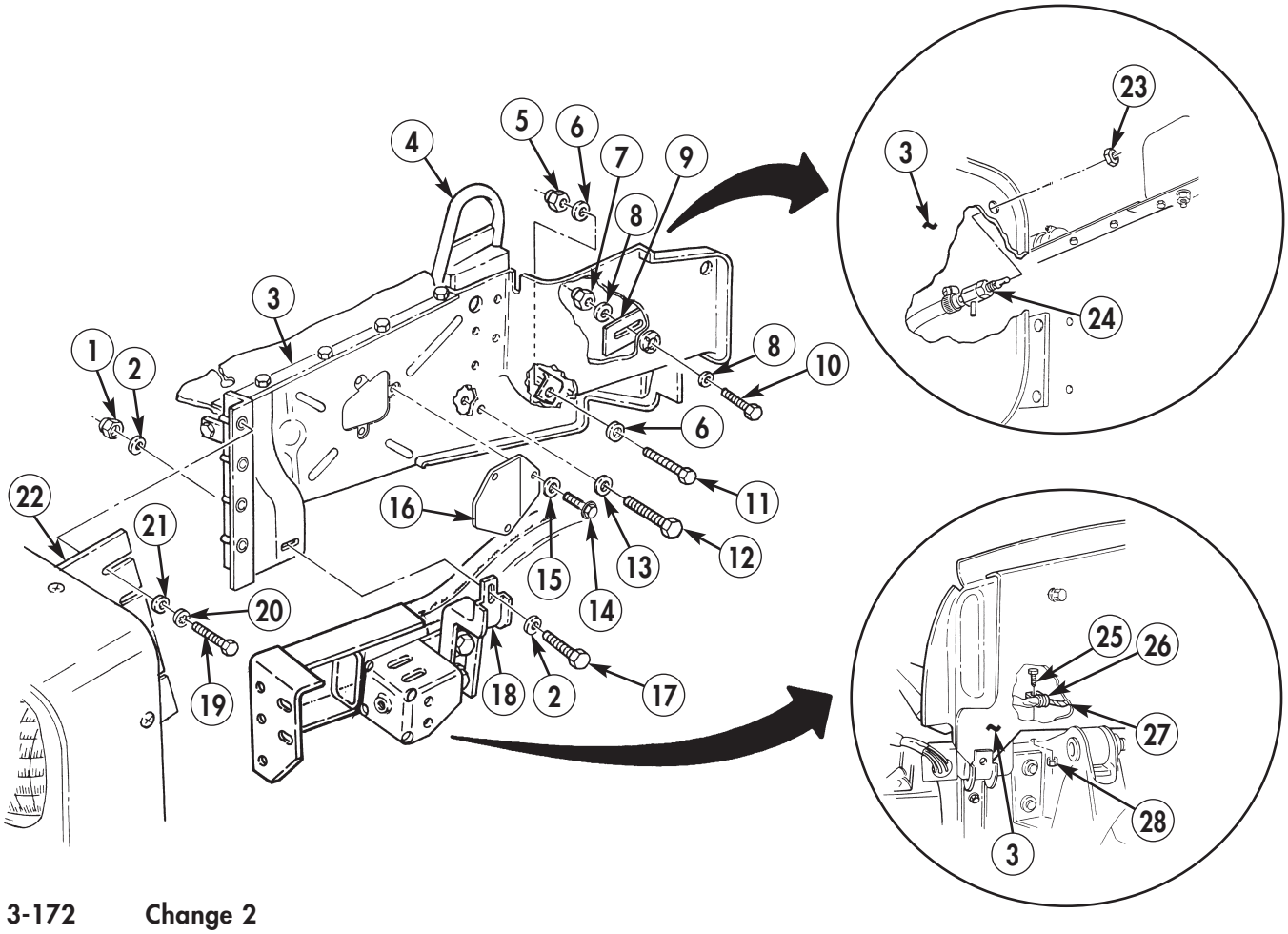

3-85. DIFFERENTIAL COOLER LINES REPLACEMENT (SERIAL NUMBERS 188975 AND ABOVE) (Cont'd)

19. Remove hose clamp (31) and hose (32) from outlet port (30) on power steering cooler (29).
20. Disconnect hose (32) from tee (36) on upper tube (37) on front intermediate crossmember (38).
21. Disconnect tee (36) from upper tube (37).
22. Disconnect tee (36) from hose (34).
23. Remove tiedown strap (33) from hose (34) and elbow (35). Discard tiedown strap (33).

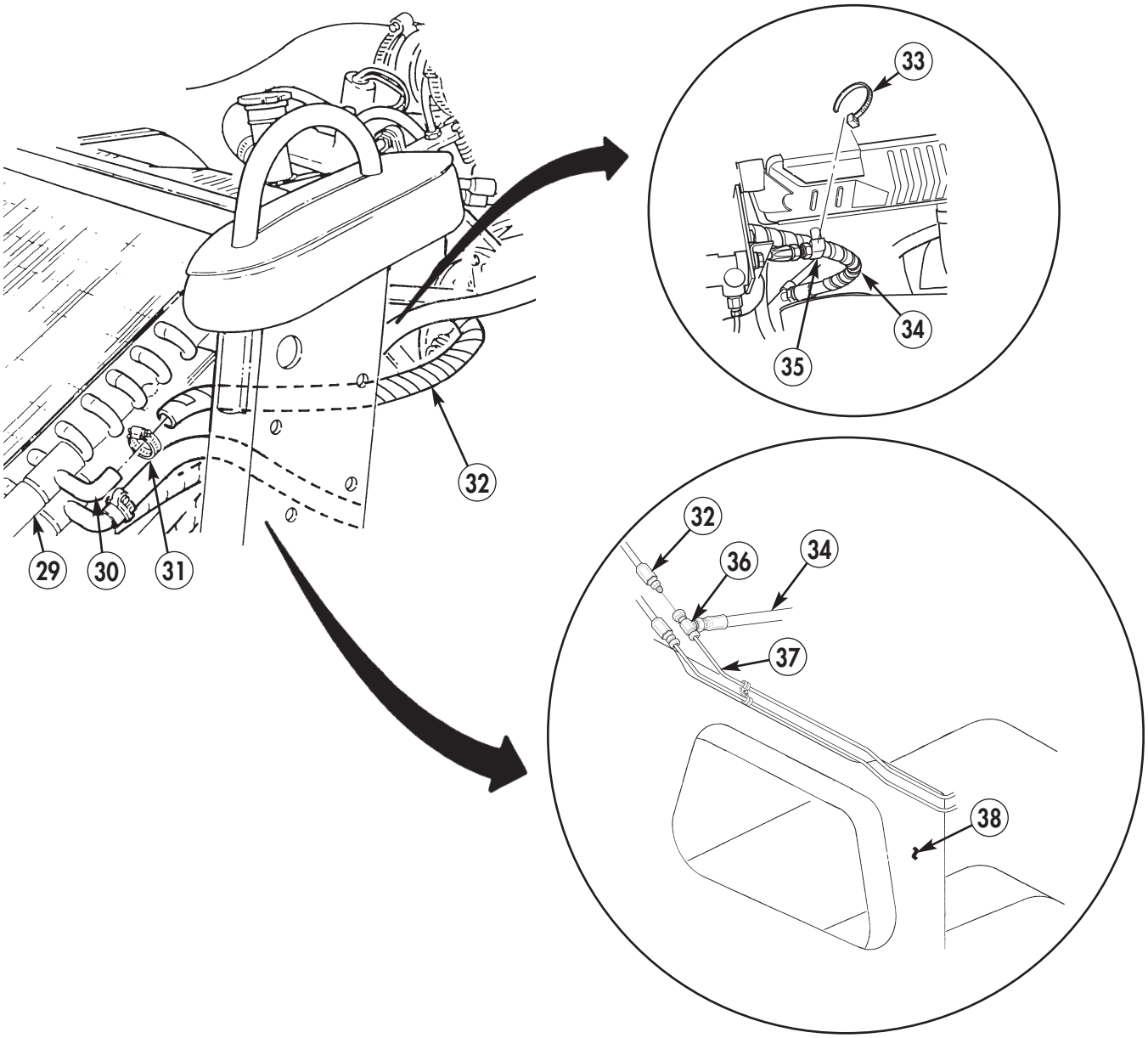

3-85. DIFFERENTIAL COOLER LINES REPLACEMENT (SERIAL NUMBERS 188975 AND ABOVE) (Cont'd)

NOTE

Perform steps 24 and 25 for vehicles with serial numbers 196901 and above.

24. Remove locknut (9), washer (8), screw (6), and three clamps (7) from bracket (10). Discard locknut (9).
25. Remove clamp (7) from hose (1).
26. Disconnect hose (1) from adapter (5) on hydraulic control valve (4).
27. Remove adapter (5) from hydraulic control valve (4).
28. Disconnect hose (1) from lower tube (2) on intermediate crossmember (3).

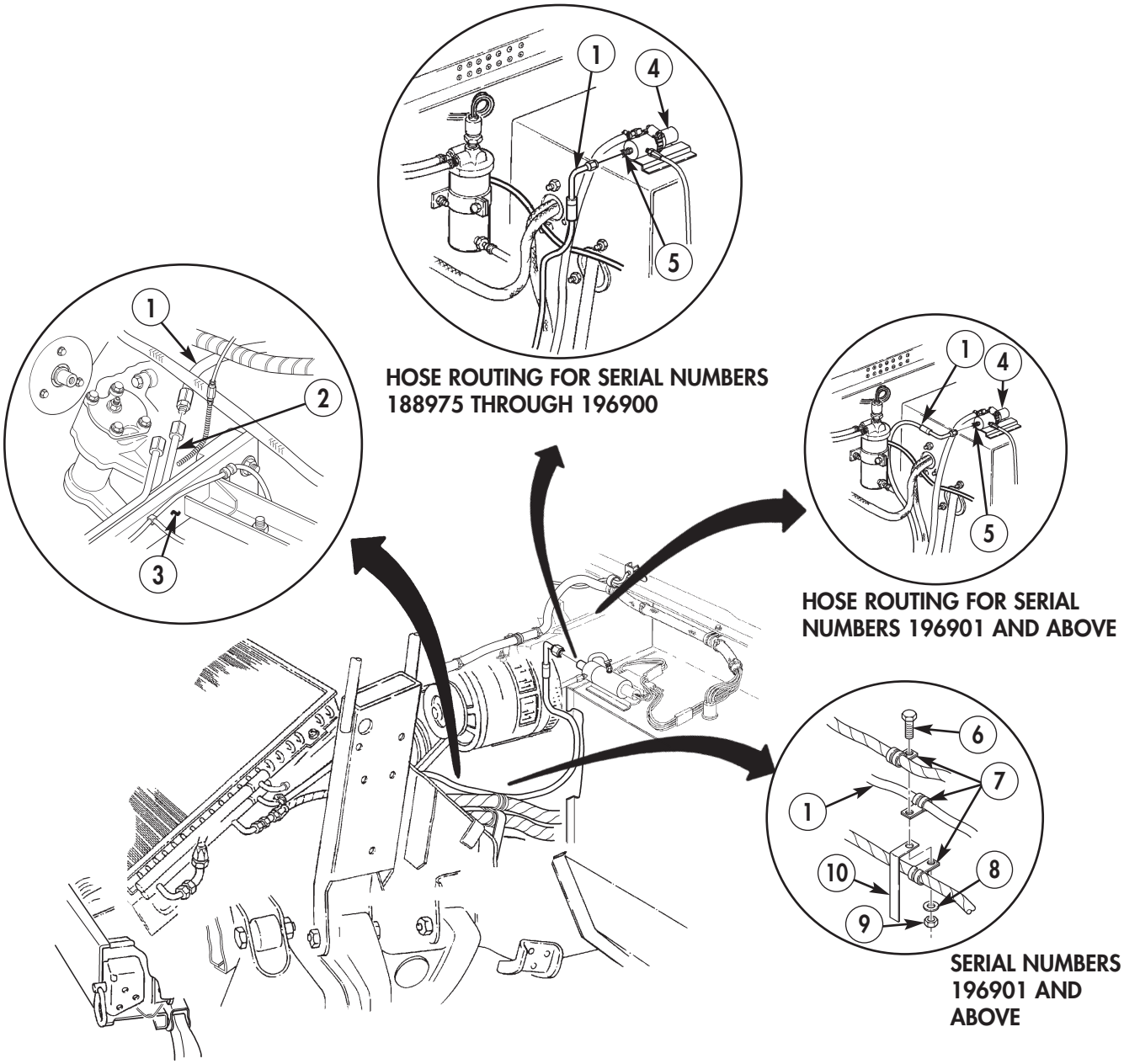

3-85. DIFFERENTIAL COOLER LINES REPLACEMENT (SERIAL NUMBERS 188975 AND ABOVE) (Cont'd)

b. Oil Cooler Tubes Removal

WARNING

Allow differential to cool before performing this task. Severe injury to personnel may result.

CAUTION

Cover or plug all hoses and connections immediately after disconnection to prevent contamination. Remove all plugs prior to connection.

NOTE

Have drainage container ready to catch oil.

1. Remove screw (1), washer (2), and two clamps (3) from from intermediate crossmember (10).
2. Remove nut (6), washer (5), nut (6), washer (5), and screw (4) from two clamps (9).
3. Remove clamp (9) from tubes (7) and (8).

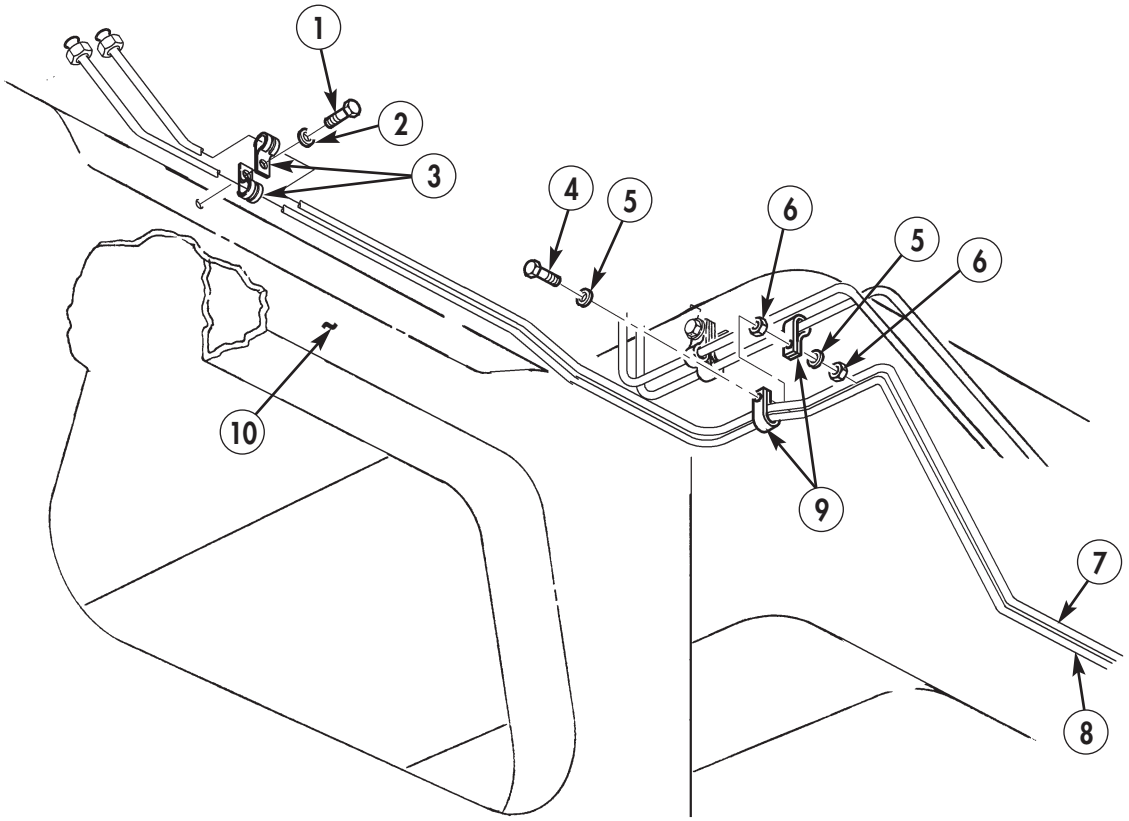

3-85. DIFFERENTIAL COOLER LINES REPLACEMENT (SERIAL NUMBERS 188975 AND ABOVE) (Cont'd)

4. Remove two nuts (5), washers (6), nuts (5), washers (6), and screws (4) from four clamps (3).
5. Remove two clamps (3) from tubes (1) and (2).
6. Disconnect tubes (1) and (2) from unions (7) and (10).
7. Remove unions (7) and (10) from tubes (8) and (9).

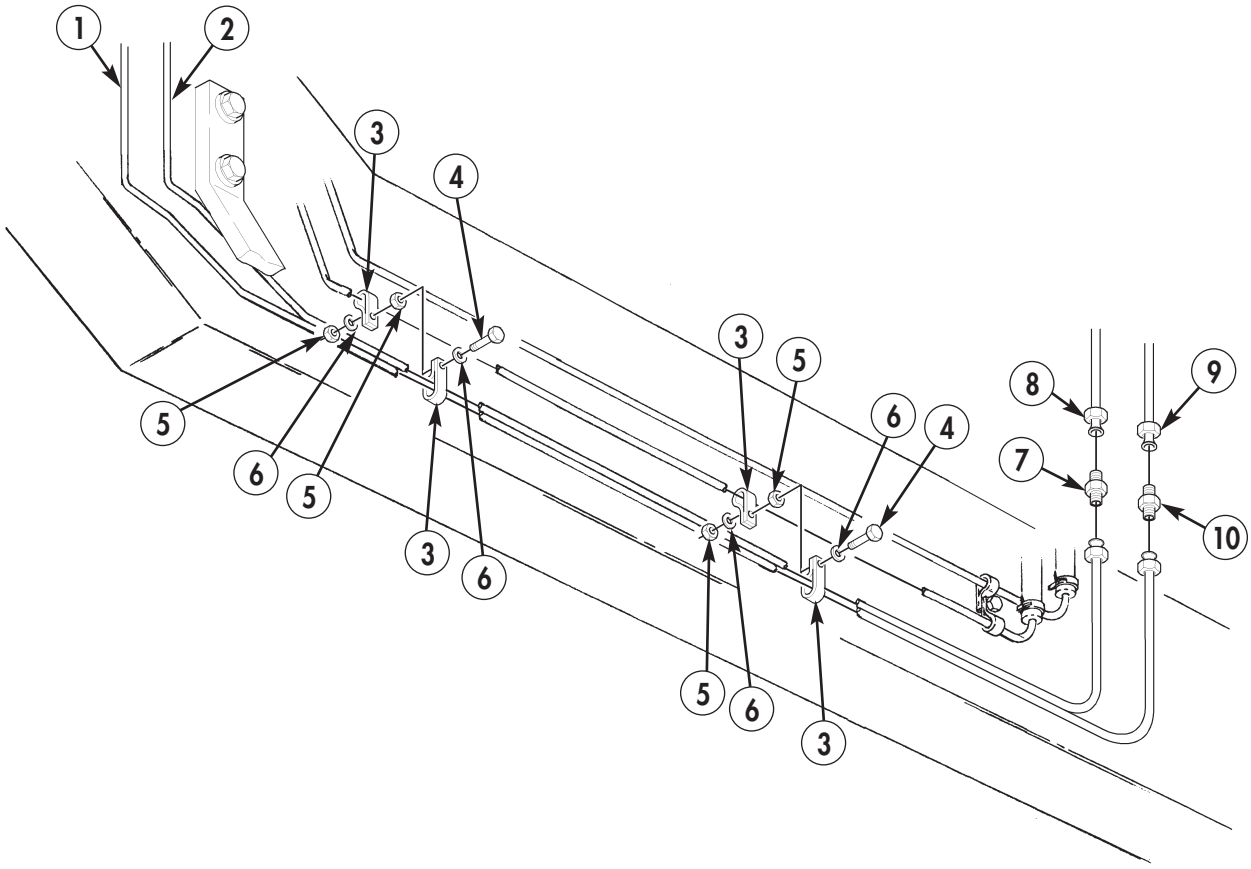

3-85. DIFFERENTIAL COOLER LINES REPLACEMENT (SERIAL NUMBERS 188975 AND ABOVE) (Cont'd)

c. Drilling Hole Locations in Tunnel Support Braces

NOTE

Perform task c. when replacing rear steel differential oil cooler tubes with flexible differential oil cooler lines.

1. Locate, mark, and drill a 0.201 in. (5.10 mm) diameter hole (1) (#7 drill bit) in tunnel support brace (2).
2. Using 0.250-20 UNC standard tap, thread hole (1) drilled in step 1 in front tunnel support brace (2).

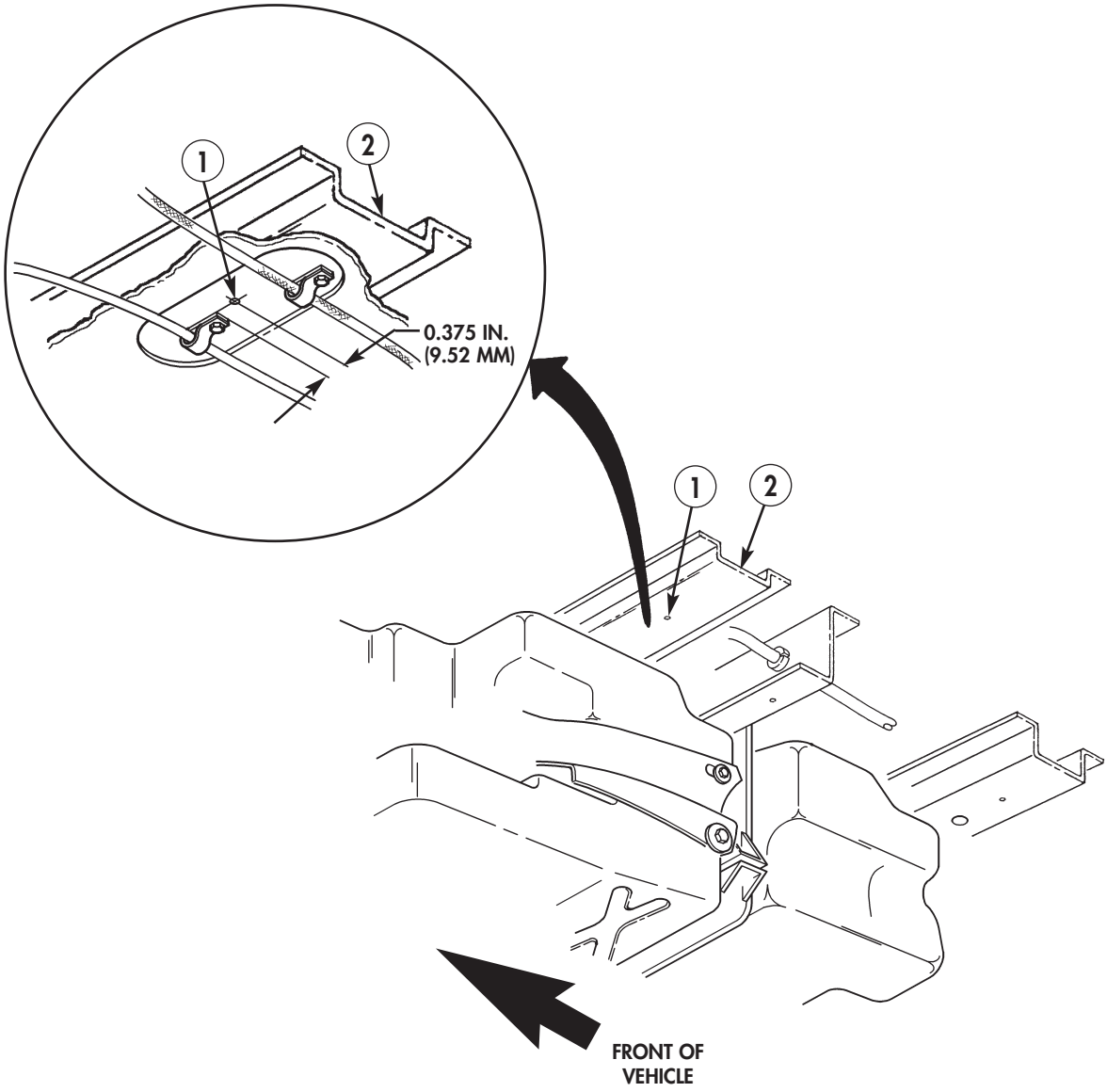

3-85. DIFFERENTIAL COOLER LINES REPLACEMENT (SERIAL NUMBERS 188975 AND ABOVE) (Cont'd)

3. Locate, mark, and drill two 0.201 in. (5.10 mm) diameter holes (1) (#7 drill bit) in tunnel support braces (2) and (3).

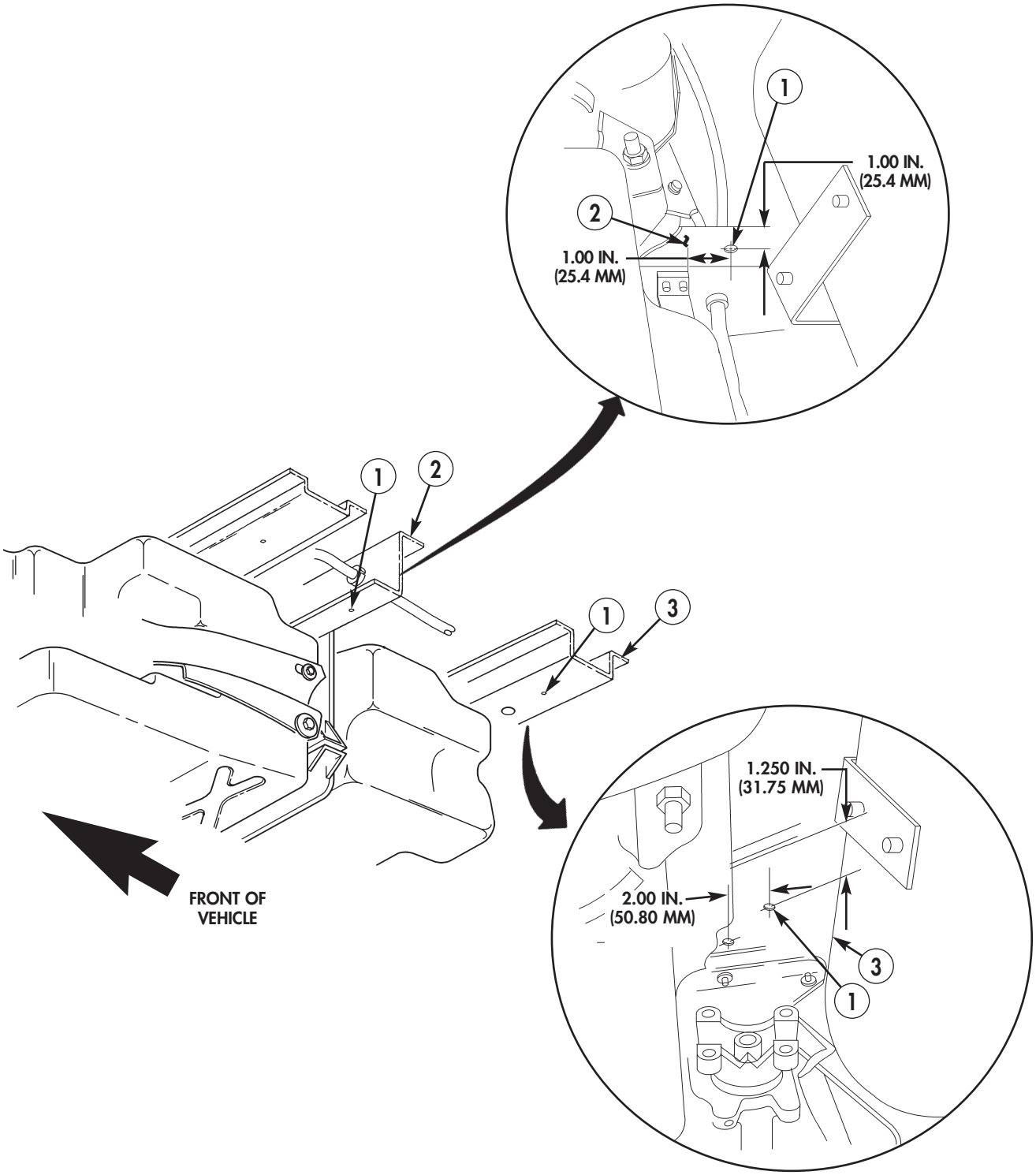

3-85. DIFFERENTIAL COOLER LINES REPLACEMENT (SERIAL NUMBERS 188975 AND ABOVE) (Cont'd)

d. Rear Oil Cooler Hoses and Tubes Installation

NOTE

- Perform task d. when replacing rear steel differential oil cooler tubes with flexible differential oil cooler lines.
- Remove all protective caps and plugs from tubes and hoses prior to connecting.

1. Connect hose (3) to tube (4).
2. Connect hose (2) to tube (1).
3. Route hose (3) and tube (4) over rear crossmember (5).
4. Route hose (2) and tube (1) over rear crossmember (5).

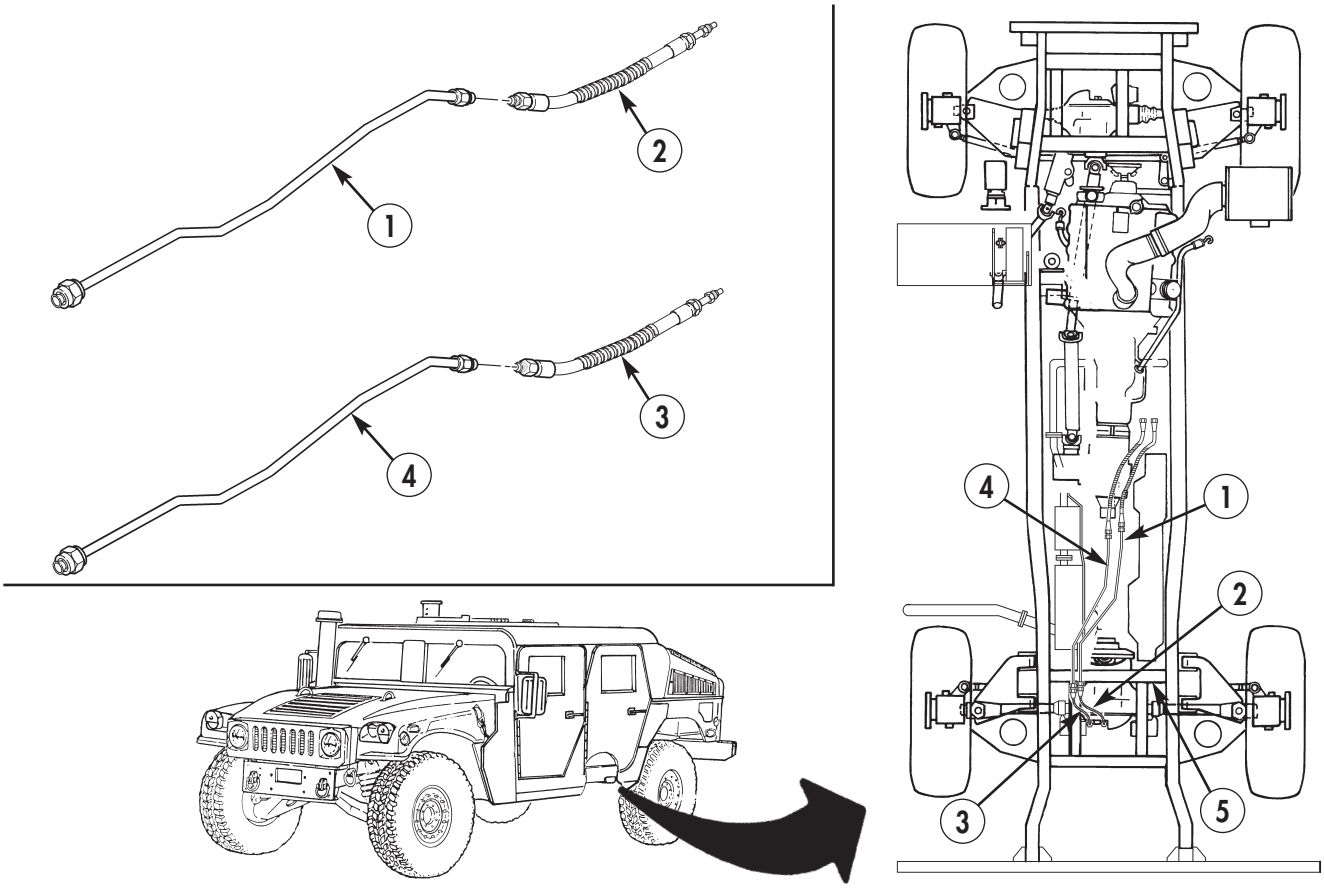

3-85. DIFFERENTIAL COOLER LINES REPLACEMENT (SERIAL NUMBERS 188975 AND ABOVE) (Cont'd)

NOTE

Ensure hoses have O-ring installed on ends that connect to cooler cover assembly.

5. Route hose (2) along rear differential support brace (1) and connect hose (2) and O-ring (8) to left port (7) on cooler cover assembly (5).
6. Route hose (3) along rear differential support brace (1) and connect hose (3) and O-ring (4) to right port (6) on cooler cover assembly (5).
7. Secure hoses (2) and (3) to differential support brace (1) with tiedown strap (9).

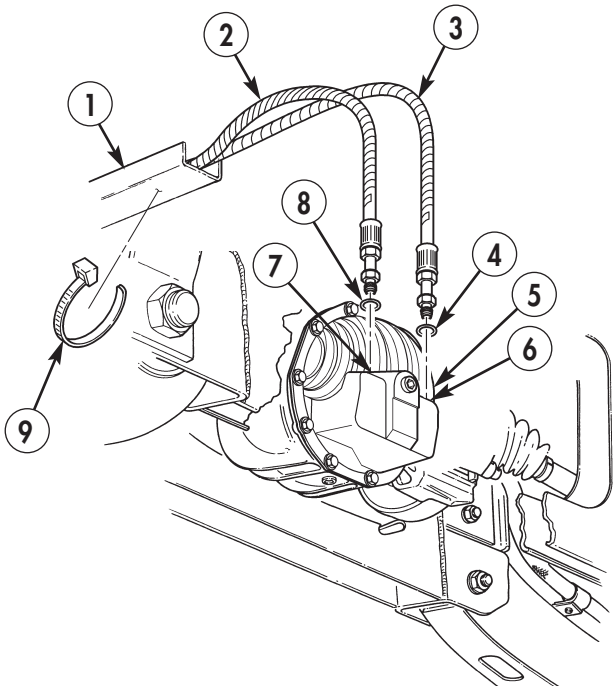

3-85. DIFFERENTIAL COOLER LINES REPLACEMENT (SERIAL NUMBERS 188975 AND ABOVE) (Cont'd)

8. Route left-hand hose (10) over transfer case and connect to tube (11).
9. Route right-hand hose (13) over transfer case and connect to tube (12).
10. Connect left-hand hose (10) to tube (15).
11. Connect right-hand hose (13) to tube (14).

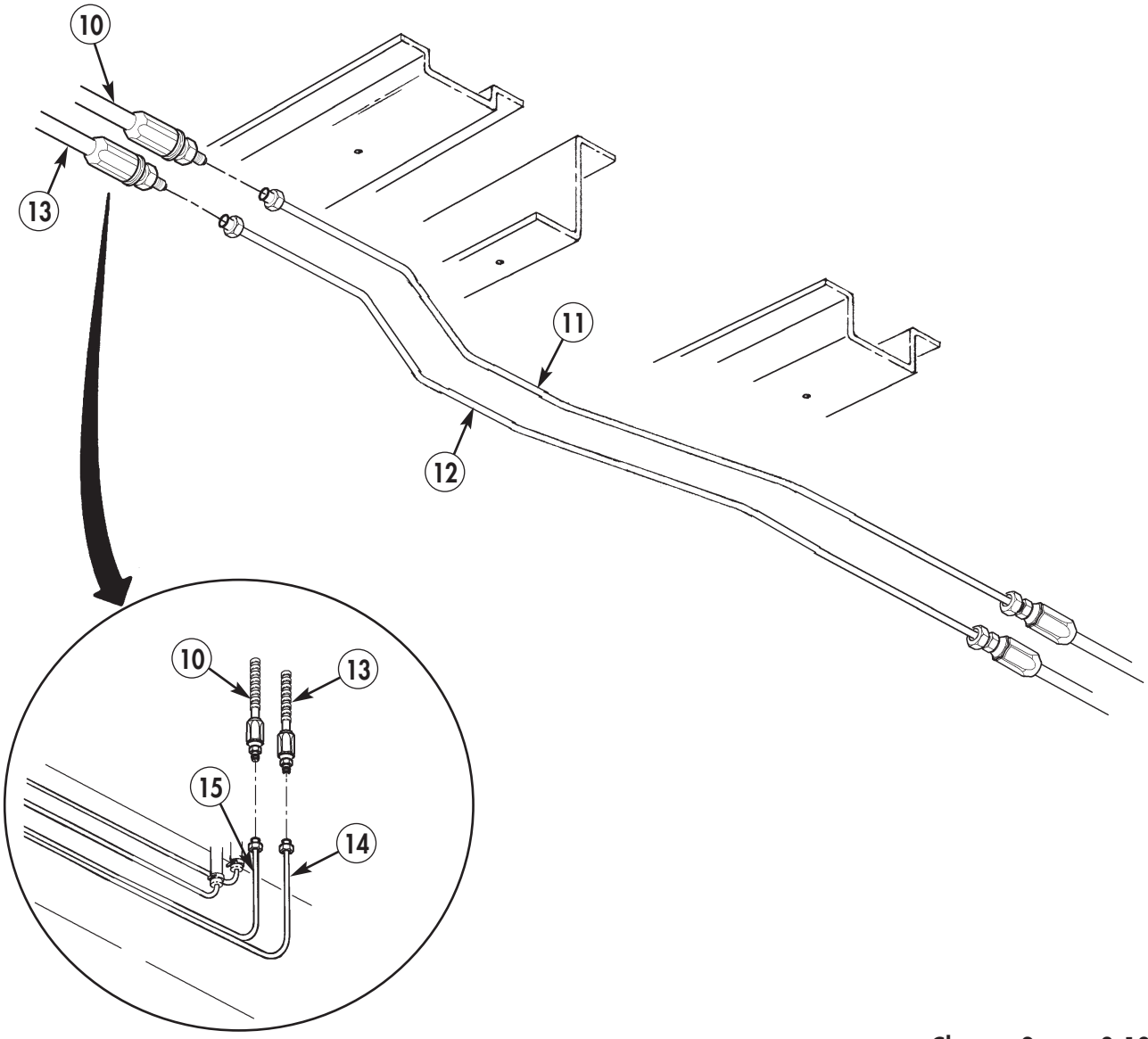

3-85. DIFFERENTIAL COOLER LINES REPLACEMENT (SERIAL NUMBERS 188975 AND ABOVE) (Cont'd)

12. Install six clamps (8) on tubes (5) and (6).
13. Secure tubes (5) and (6) to center tunnel support brace (3) with two clamps (8), washer (7), and tapping screw (9).
14. Secure tubes (5) and (6) to rear tunnel support brace (4) with two clamps (8), washer (7), and tapping screw (9).
15. Secure tubes (5) and (6) to front tunnel support brace (2) with two spacers (1), clamps (8), washer (7), and bolt (10).
16. Secure hose (11) and (12) together with three tiedown straps (13).

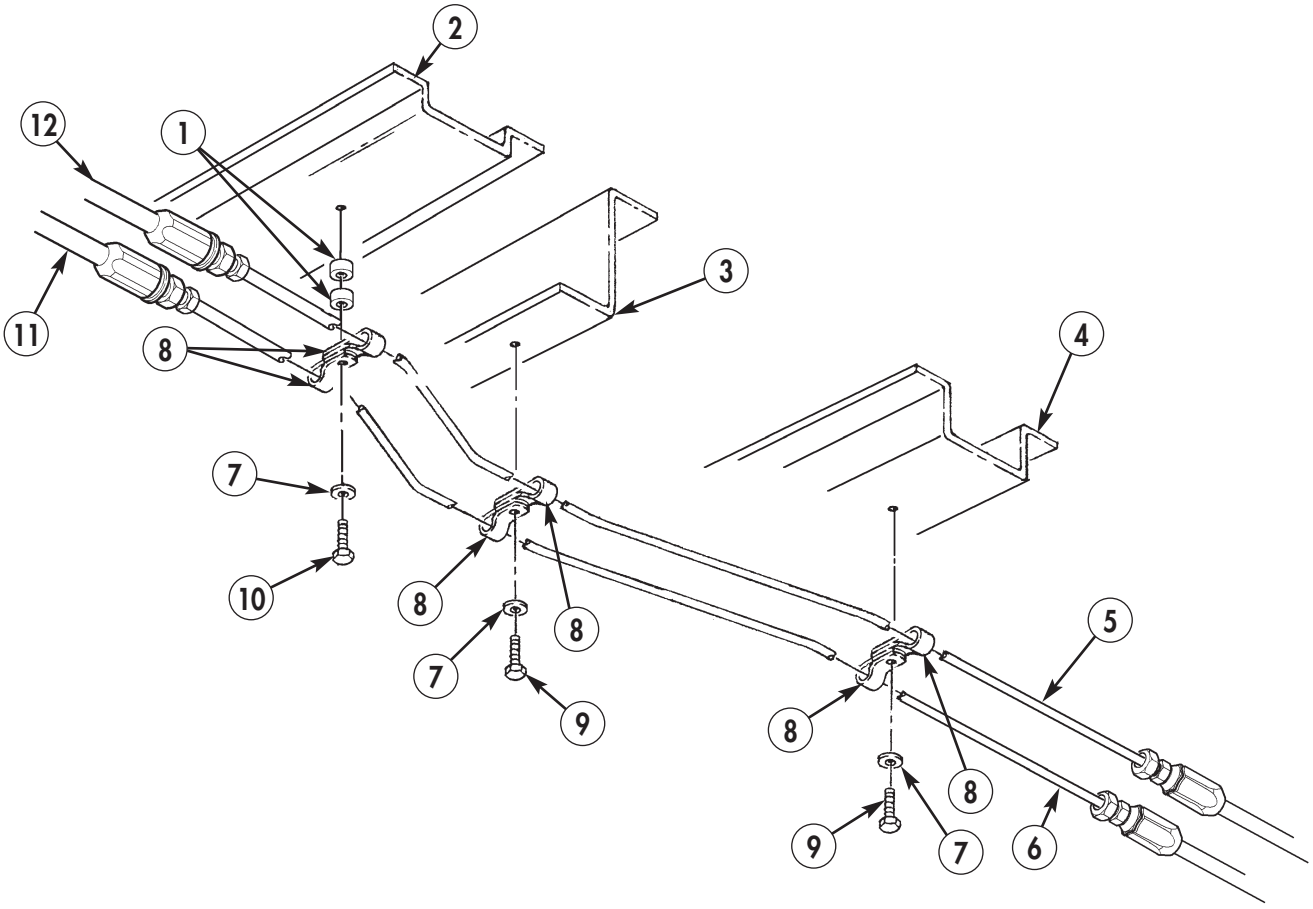

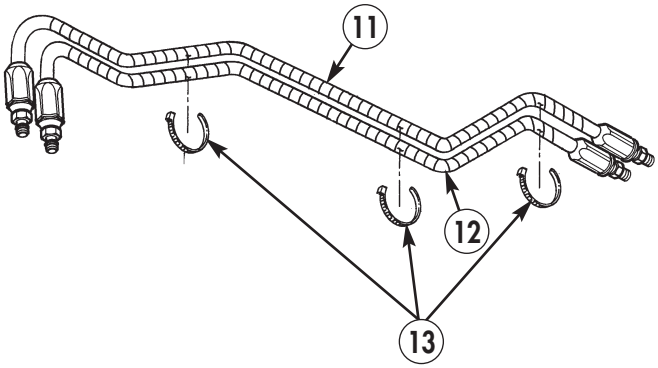

3-85. DIFFERENTIAL COOLER LINES REPLACEMENT (SERIAL NUMBERS 188975 AND ABOVE) (Cont'd)

e. Oil Cooler Tubes Installation

1. Install two clamps (18) on tubes (16) and (17) with screws (19), washers (20), and nuts (21).
2. Route tubes (16) and (17) along right-hand frame rail (14) and under idler arm (15).
3. Secure two clamps (18) on tubes (16) and (17) to two clamps on transmission cooler tube (22) with washers (20) and nuts (21).

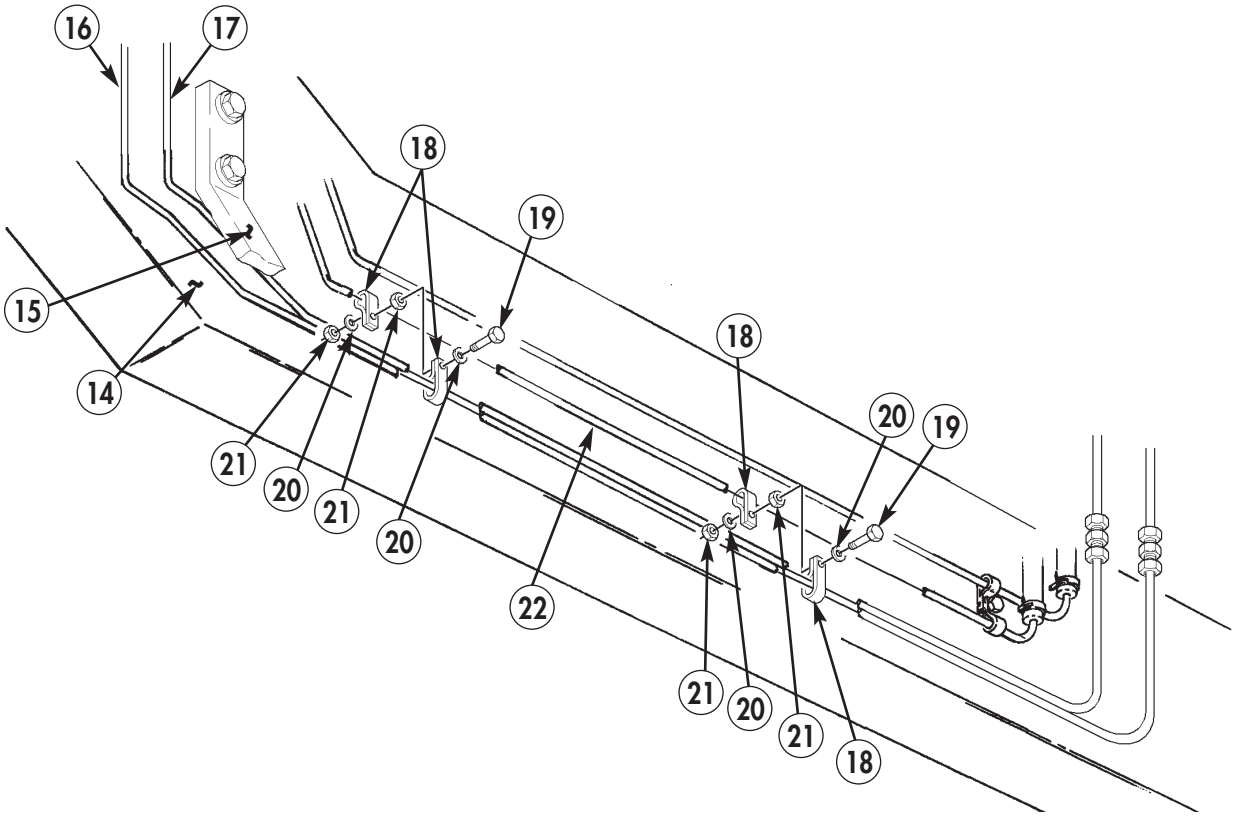

3-85. DIFFERENTIAL COOLER LINES REPLACEMENT (SERIAL NUMBERS 188975 AND ABOVE) (Cont'd)

4. Route tubes (8) and (9) along right-hand frame rail (7) and onto front intermediate crossmember (11).
5. Install two clamps (3) on tubes (8) and (9).
6. Secure tubes (8) and (9) to front intermediate crossmember (11) with washer (1) and screw (2).
7. Install clamp (3) on tubes (8) and (9).
8. Secure tubes (8) and (9) to clamp (3) on transmission oil cooler line (10) with clamp (3), washer (5), screw (4), nut (6), washer (5), and nut (6).

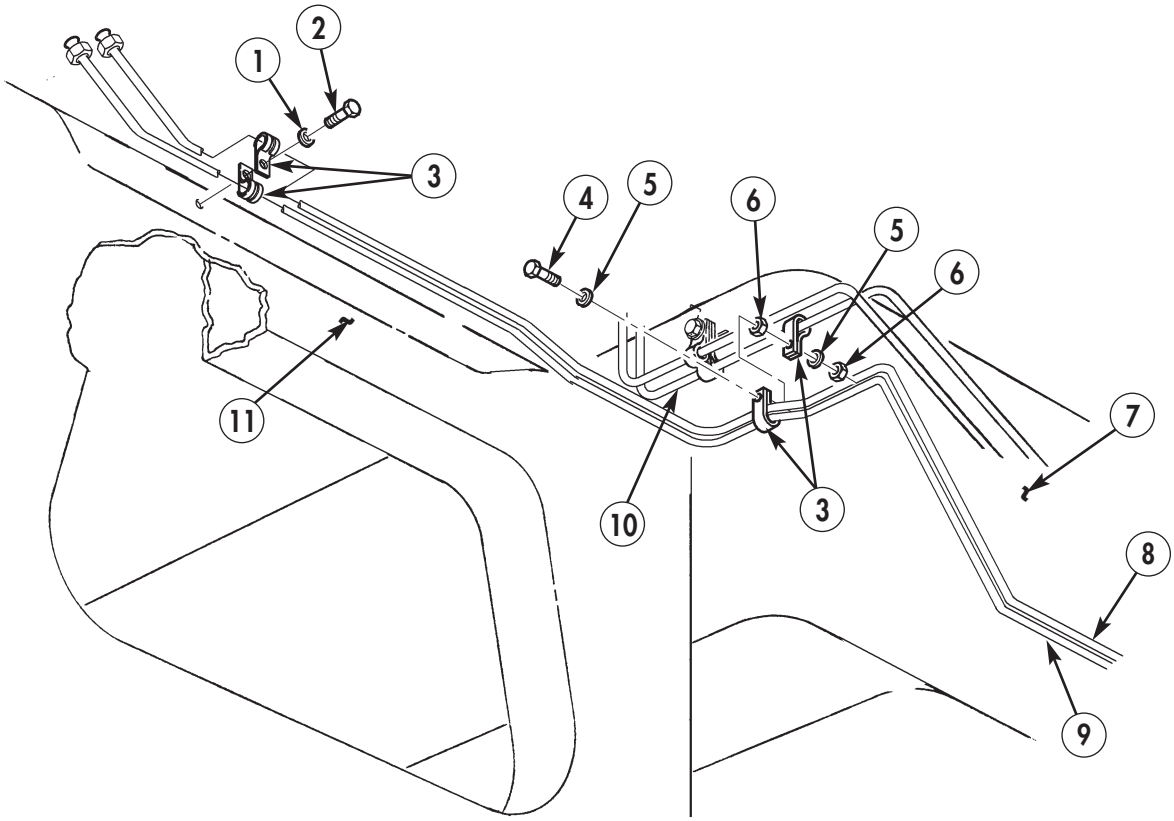

3-85. DIFFERENTIAL COOLER LINES REPLACEMENT (SERIAL NUMBERS 188975 AND ABOVE) (Cont'd)

f. Front Hoses and Relief Valve Installation

NOTE

Remove all protective caps and plugs from tubes and hoses prior to connecting.

1. Connect hose (1) to lower tube (2) on front intermediate crossmember (3).

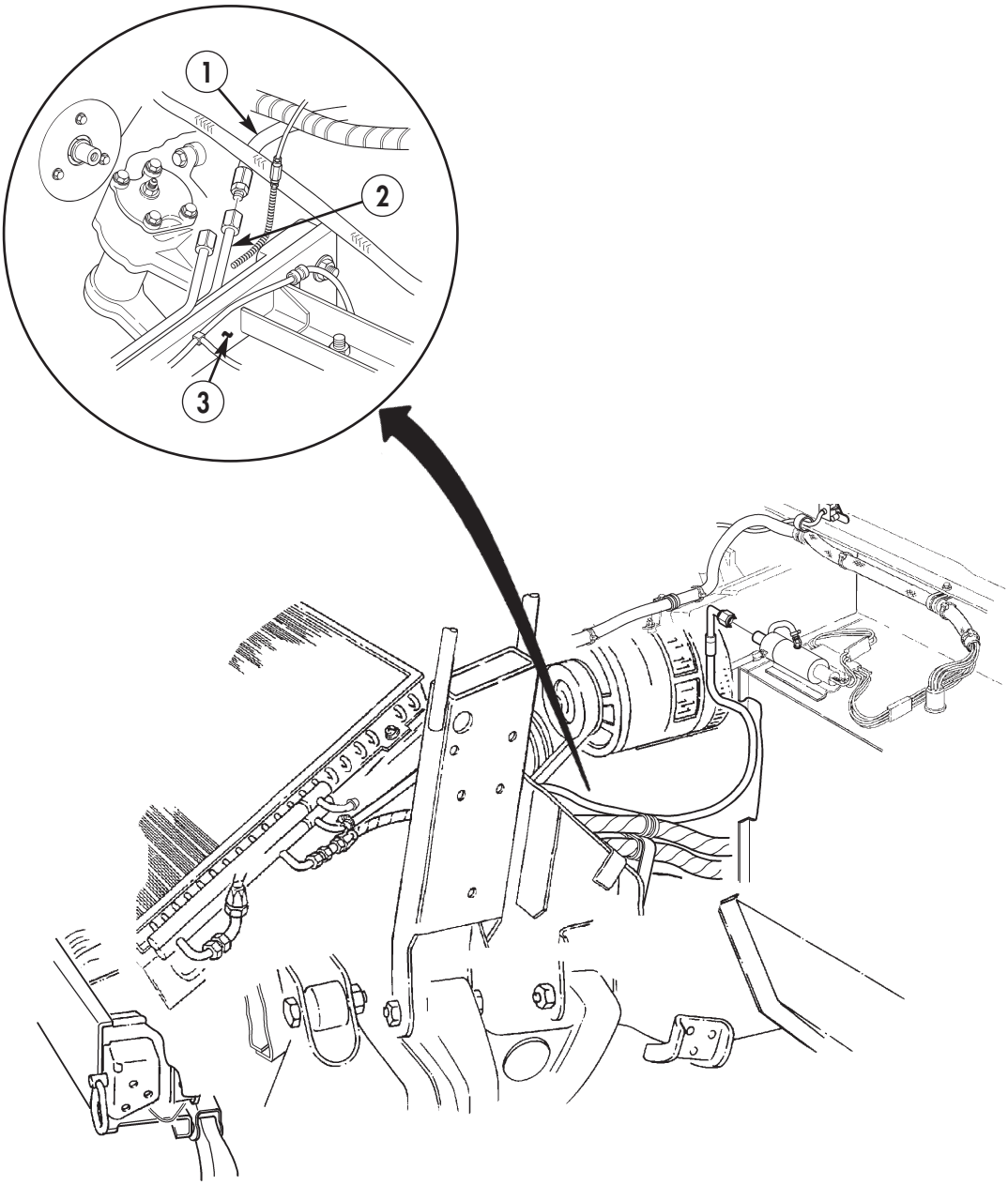

3-85. DIFFERENTIAL COOLER LINES REPLACEMENT (SERIAL NUMBERS 188975 AND ABOVE) (Cont'd)

2. Route hose (1) along left inner cowl (3) to adapter (4) on hydraulic control valve (2).

NOTE

Do not apply pipe sealing compound on first two threads of adapter.

3. Apply pipe sealing compound to threads of adapter (4) and install on hydraulic control valve (2).
4. Connect hose (1) to adapter (4) on hydraulic control valve (2).

NOTE

Perform steps 5 and 6 for vehicles with serial numbers 196901 and above.

5. Install clamp (6) on hose (1).
6. Install three clamps (6) on bracket (9) with screw (5), washer (7), and locknut (8).

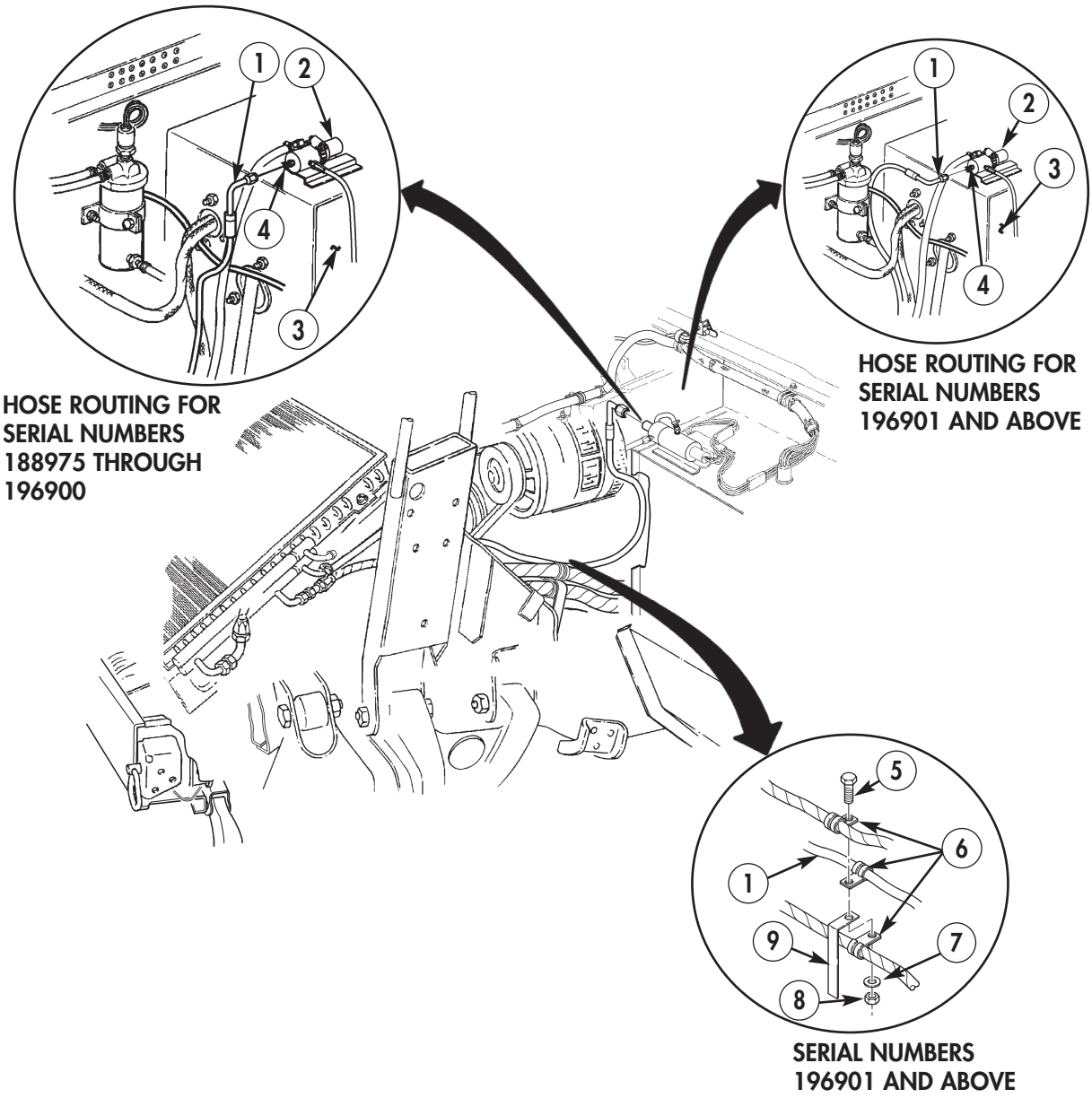

3-85. DIFFERENTIAL COOLER LINES REPLACEMENT (SERIAL NUMBERS 188975 AND ABOVE) (Cont'd)

NOTE

Ensure that hose and tee are positioned towards fan shroud and away from moving parts when tightening.

7. Connect tee (16) to hose (12).
8. Connect tee (16) to upper tube (15), and route hose (12) under elbow (13) on fan shroud (14) and under brake limiter bracket (10).
9. Install tiedown strap (11) on elbow (13) and hose (12).

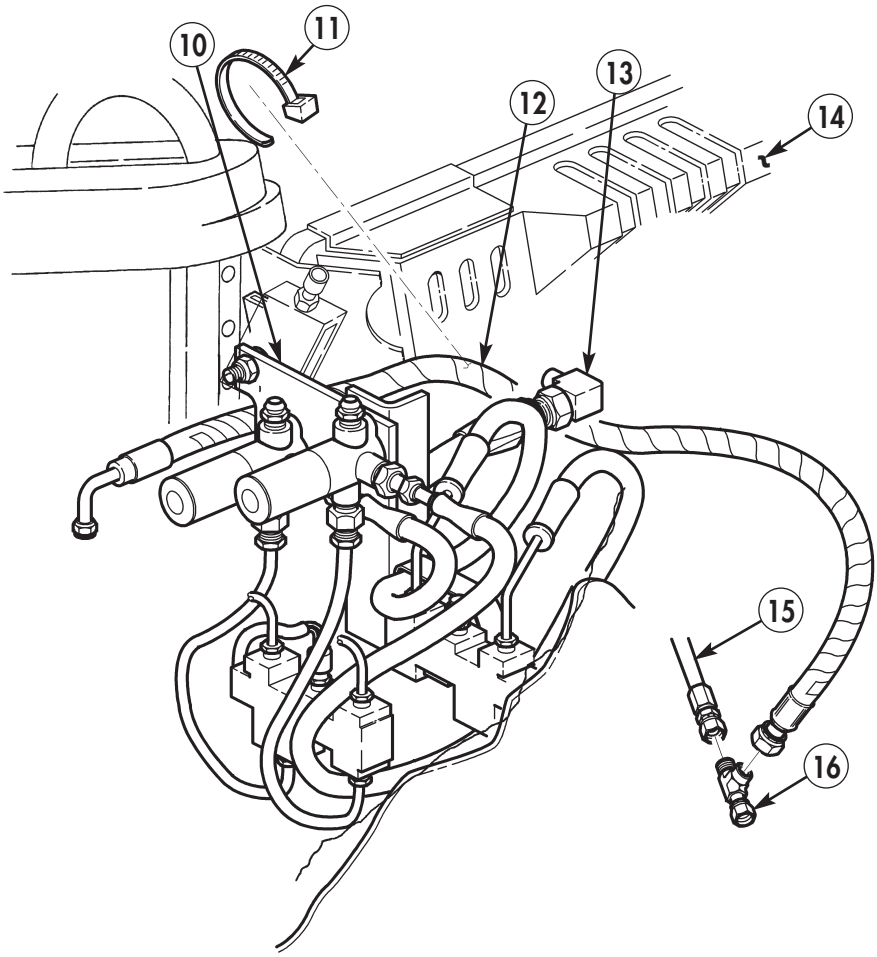

3-85. DIFFERENTIAL COOLER LINES REPLACEMENT (SERIAL NUMBERS 188975 AND ABOVE) (Cont'd)

10. Connect hose (4) to tee (5) on upper tube (7) on front intermediate crossmember (8) and route to outlet port (2) on power steering oil cooler (1).
11. Install hose (4) on outlet port (2) with hose clamp (3).

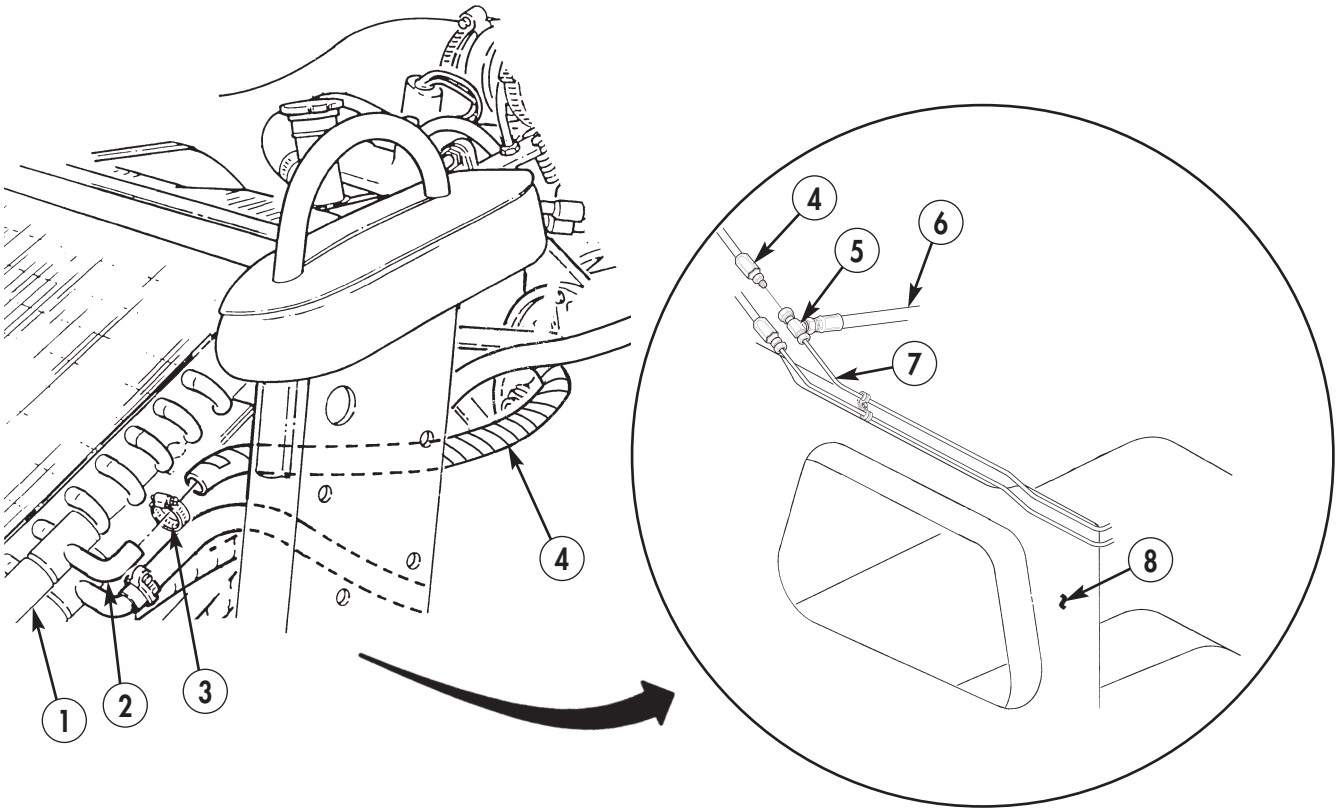

3-85. DIFFERENTIAL COOLER LINES REPLACEMENT (SERIAL NUMBERS 188975 AND ABOVE) (Cont'd)

12. Install left splash shield (11) on vehicle and install harness (35) and clamp (34) on left splash shield (11) with screw (33) and locknut (36).

NOTE

Perform steps 14 through 17 and 19 for M1113 and steps 16 through 19 for M1114.

13. Install screw (20) and lockwasher (21) on left splash shield (11) and airlift bracket (12).
14. Install screw (19), two washers (14), and locknut (13) on left splash shield (11) and airlift bracket (12).
15. Install left splash shield (11) on master cylinder bracket (17) with two washers (16), screw (18), and locknut (15).
16. Install left splash shield (11) on support bracket (26) with two washers (10), screw (25), and locknut (9).
17. Install left splash shield (11) on plate (30) with four washers (29), lockwashers (28), and screws (27).
18. Install fuel filter drain valve (32) on left splash shield (11) and nut (31).
19. Install access cover (24) on left splash shield (11) with three washers (23) and screws (22).

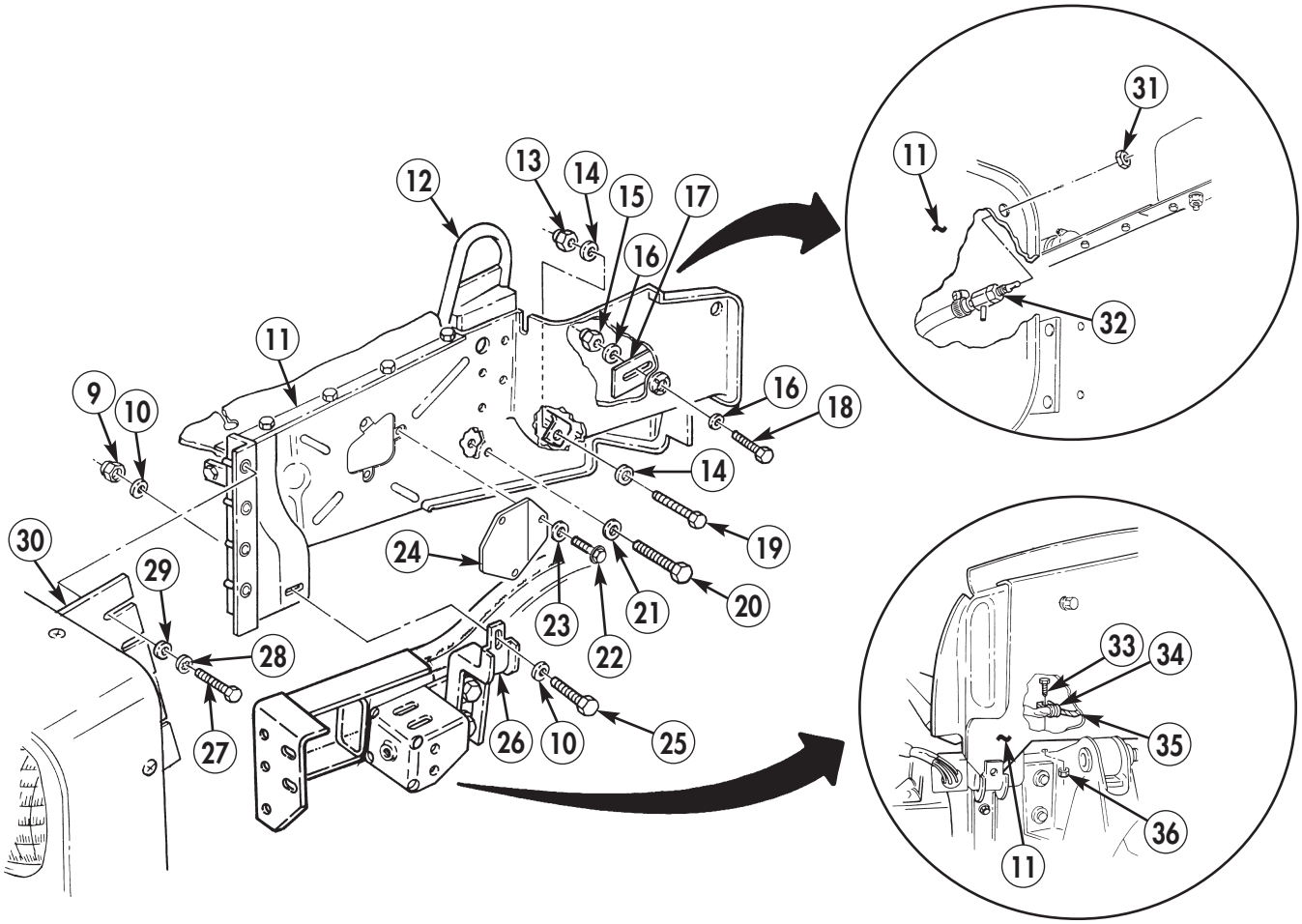

3-85. DIFFERENTIAL COOLER LINES REPLACEMENT (SERIAL NUMBERS 188975 AND ABOVE) (Cont'd)

20. Install relief valve (3) on splash shield (14) with reinforcement (13), two washers (6), and bolts (7).
21. Install hood prop rod (17) and bracket (19) on left splash shield (14) and airlift bracket (18) with four lockwashers (20) and screws (21).
22. Install O-ring (15) and union (16) on side of relief valve (3).
23. Install O-ring (5) and union (4) on top of relief valve (3).
24. Connect bypass hose (1) to union (16).
25. Connect bypass hose (2) to union (4).
26. Connect bypass hose (1) and return hose (10) to tee (9) with two clamps (8).

NOTE

For vehicles with serial numbers 196901 and above, return hose is routed under fan clutch hydraulic line. For vehicles with serial numbers 188975 through 196900, return hose is routed over fan clutch hydraulic line.

27. Route return hose (11) over fan clutch hydraulic line (12) and connect return hose (11) to tee (9) with clamp (8).
28. Install clamp (19) on bypass hose (1).
29. Secure two clamps (19) together with bolt (20), washer (18), and locknut (17).

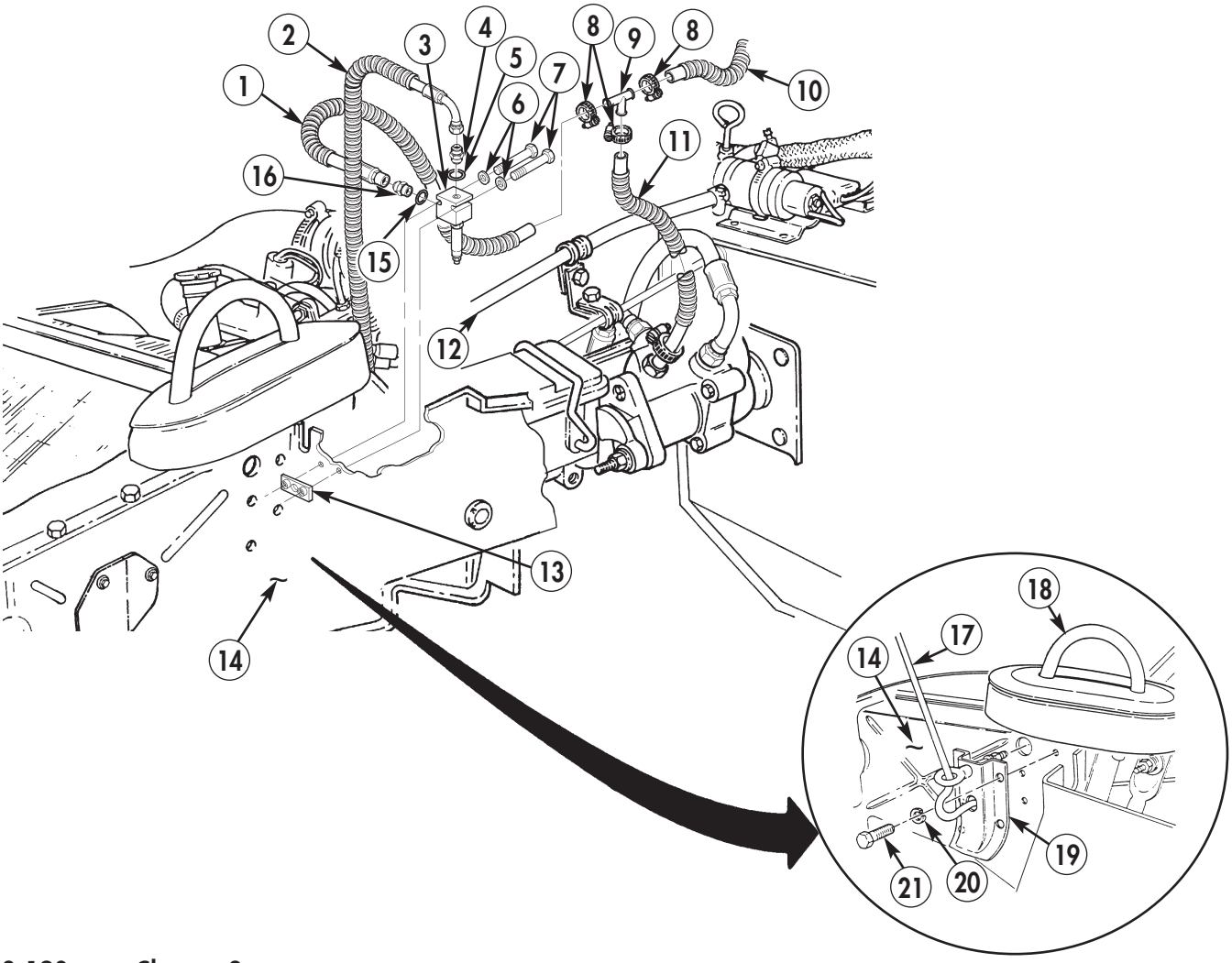

3-85. DIFFERENTIAL COOLER LINES REPLACEMENT (SERIAL NUMBERS 188975 AND ABOVE) (Cont'd)

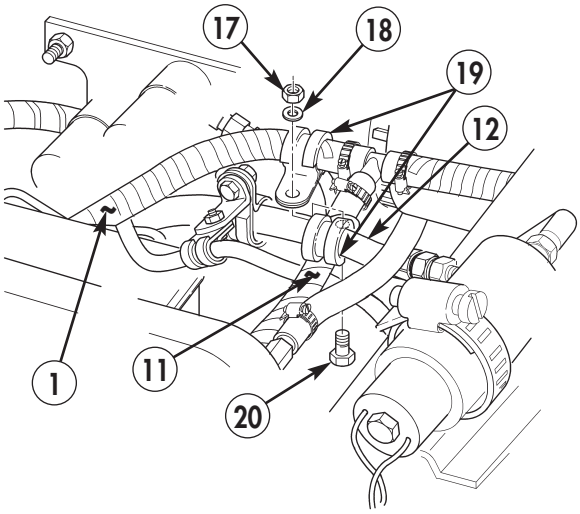

SERIAL NUMBERS 188975 THROUGH 196900

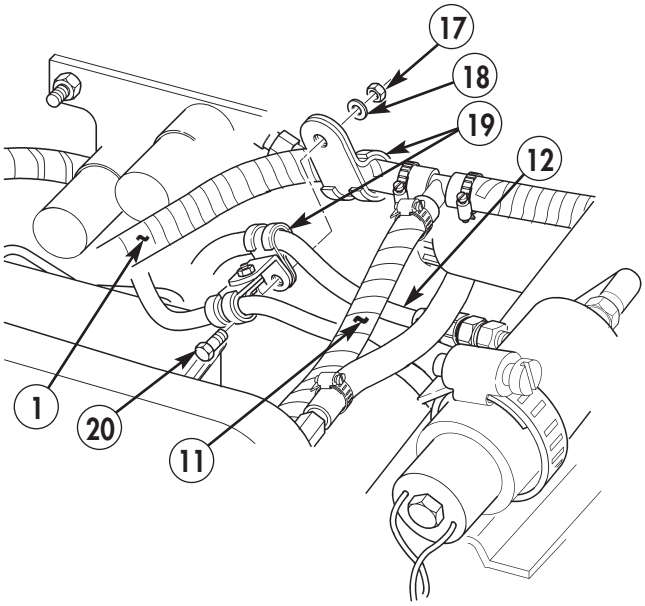

SERIAL NUMBERS 196901 AND ABOVE

FOLLOW-ON TASKS:
- Install rear propeller shaft (para. 6-4).
- Connect battery ground cables (para. 4-68).
- Install rear brake protection guards (para. 7-11).
- Bleed power steering system (para. 8-27).
- Start engine (TM 9-2320-387-10) and inspect for leaks at all differential cooler supply hoses and return line connections.

CHAPTER 4
ELECTRICAL SYSTEM (UNIT) MAINTENANCE

Section I. GENERATING AND PROTECTIVE CONTROL BOX (PCB) SYSTEM MAINTENANCE

4-1. GENERATING AND PROTECTIVE CONTROL BOX (PCB) SYSTEM MAINTENANCE TASK SUMMARY

TASK PARA.	PROCEDURES	PAGE NO.
4-2.	Alternator Pulley Replacement	4-2
4-2.1.	Alternator Clutch Pulley Replacement (Serial Numbers 196901 and Above)	4-2.2
4-3.	Alternator/Power Steering Mounting Bracket Replacement	4-2.4
4-3.1.	Alternator/Power Steering Mounting Bracket Replacement (Serial Numbers 196901 and Above)	4-4
4-4.	Protective Control Box Maintenance	4-6
4-5.	200-Ampere Dual Voltage Alternator Replacement	4-8
4-6.	200-Ampere Dual Voltage Alternator Cable Replacement	4-12
4-7.	200-Ampere Dual Voltage Umbilical Power Cable Replacement	4-14
4-8.	200-Ampere Dual Voltage Regulator Replacement	4-18
4-8.1.	400-Ampere Dual Voltage Regulator Replacement	4-18.2
4-8.2.	400-Ampere Dual Voltage Alternator Cable Replacement	4-18.4
4-8.3.	400-Ampere Dual Voltage Alternator Replacement	4-18.12

4-2. ALTERNATOR PULLEY REPLACEMENT

This task covers:

a. Removal **b. Installation**

INITIAL SETUP:

Tools

General mechanic's tool kit: automotive (Appendix B, Item 1)
Maintenance and repair shop equipment: automotive (Appendix B, Item 2)
Mechanical puller (Appendix B, Item 157)
Vise inserts (Appendix B, Item 160)

Materials/Parts

Locknut (Appendix G, Item 74)
Woodruff key (Appendix G, Item 332)

Manual References

TM 9-2320-387-24P

Equipment Condition

Alternator removed (para. 4-5).

Maintenance Level

Unit

a. Removal

1. Clamp alternator pulley (2) in soft-jawed vise.
2. Remove locknut (5) and washer (4) from alternator shaft (3). Discard locknut (5).
3. Remove pulley (2) from soft-jawed vise.
4. Using mechanical puller, remove pulley (2) from alternator (1).
5. Remove woodruff key (6) from alternator shaft (3). Discard woodruff key (6).

b. Installation

CAUTION

Serpentine belt failure (abnormal wear or belt dislodgement) can be caused by misalignment of pulleys, improper installation, or foreign objects introduced into belt path. Inspect water pump pulley for proper installation and ease of rotation. Any wobble or misalignment will cause belt failure.

1. Position woodruff key (6) in alternator shaft (3) with flat side up.
2. Align pulley keyway (7) with woodruff key (6) in alternator shaft (3) and tap pulley (2) onto shaft (3).
3. Install washer (4) and locknut (5) on shaft (3). Tighten locknut (5) finger-tight.
4. Clamp pulley (2) in soft-jawed vise.
5. Tighten locknut (5) to 115-125 lb-ft (156-169 N•m).
6. Remove pulley (2) and alternator (1) from vise.

4-2. ALTERNATOR PULLEY REPLACEMENT (Cont'd)

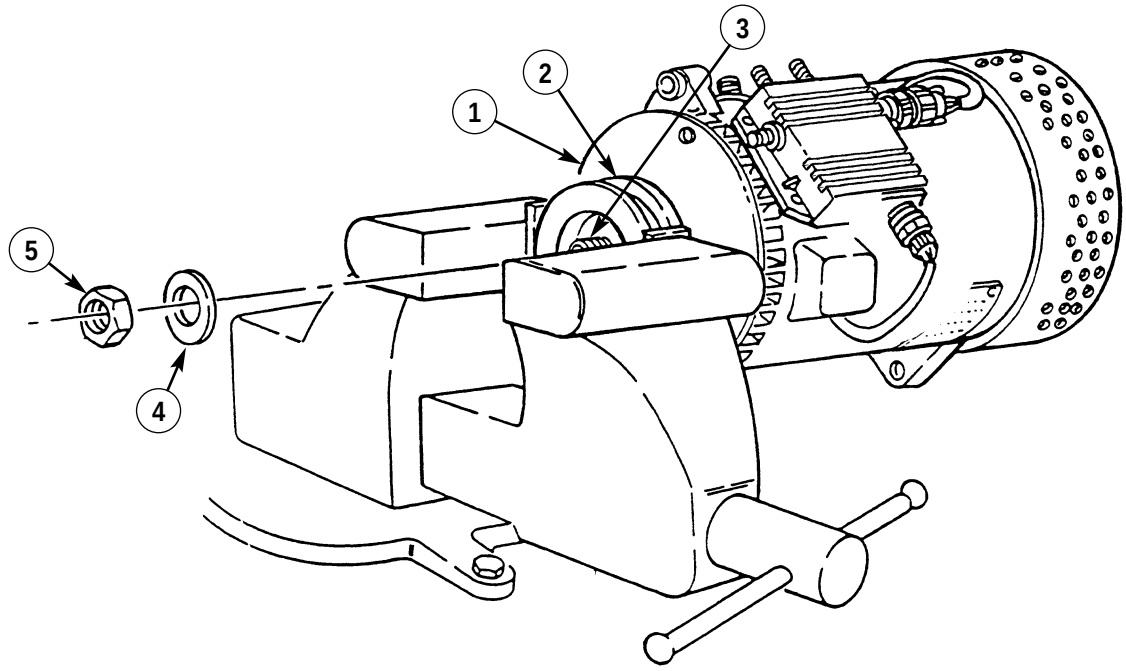

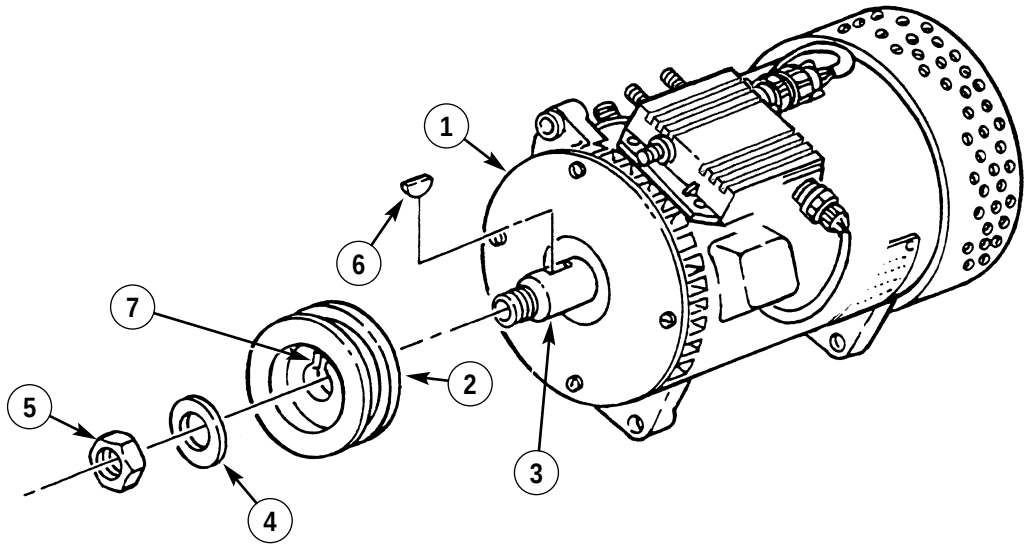

FOLLOW-ON TASK: Install alternator (para. 4-5).

4-2.1. ALTERNATOR CLUTCH PULLEY REPLACEMENT (SERIAL NUMBERS 196901 AND ABOVE)

This task covers:

a. Removal **b. Installation**

INITIAL SETUP:

Tools

General mechanic's tool kit:
automotive (Appendix B, Item 1)
Maintenance and repair shop equipment:
automotive (Appendix B, Item 2)

Materials/Parts

Woodruff key (Appendix G, Item 332)

Manual References

TM 9-2320-387-24P

Equipment Condition

Serpentine drivebelt removed (para. 3-81.1).

Maintenance Level

Unit

a. Removal

1. Hold adapter (3) with socket and breaker bar. Place wrench on installation nut (1), turn installation nut (1) counterclockwise, and remove installation nut (1) from alternator (2).
2. Hold rear nut of alternator shaft (6) and remove adapter (3), clutch pulley (4), and woodruff key (5) from alternator (2). Discard woodruff key (5).

b. Installation

1. Install woodruff key (5) and clutch pulley (4) on shaft (6) of alternator (2).
2. Install adapter (3) on alternator (2). Hold rear nut on alternator shaft (6) and tighten adapter (3) to 50 lb-ft (68 N·m).
3. Install installation nut (1) on adapter (3). Using torque wrench set at 120 lb-ft (163 N·m) and socket, hold adapter (3) with socket and torque wrench. Turn installation nut (1) clockwise with wrench until torque is reached.

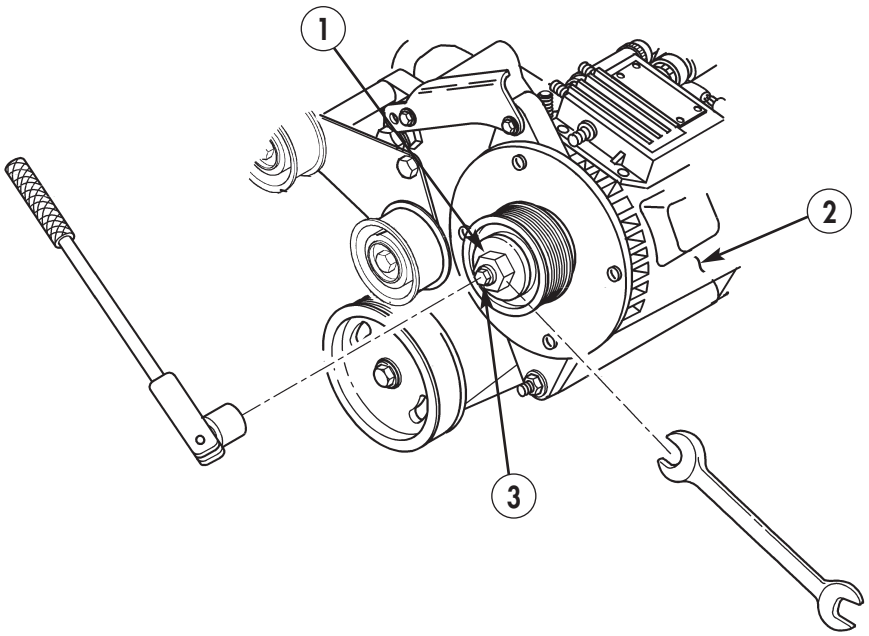

4-2.1. ALTERNATOR CLUTCH PULLEY REPLACEMENT (SERIAL NUMBERS 196901 AND ABOVE) (Cont'd)

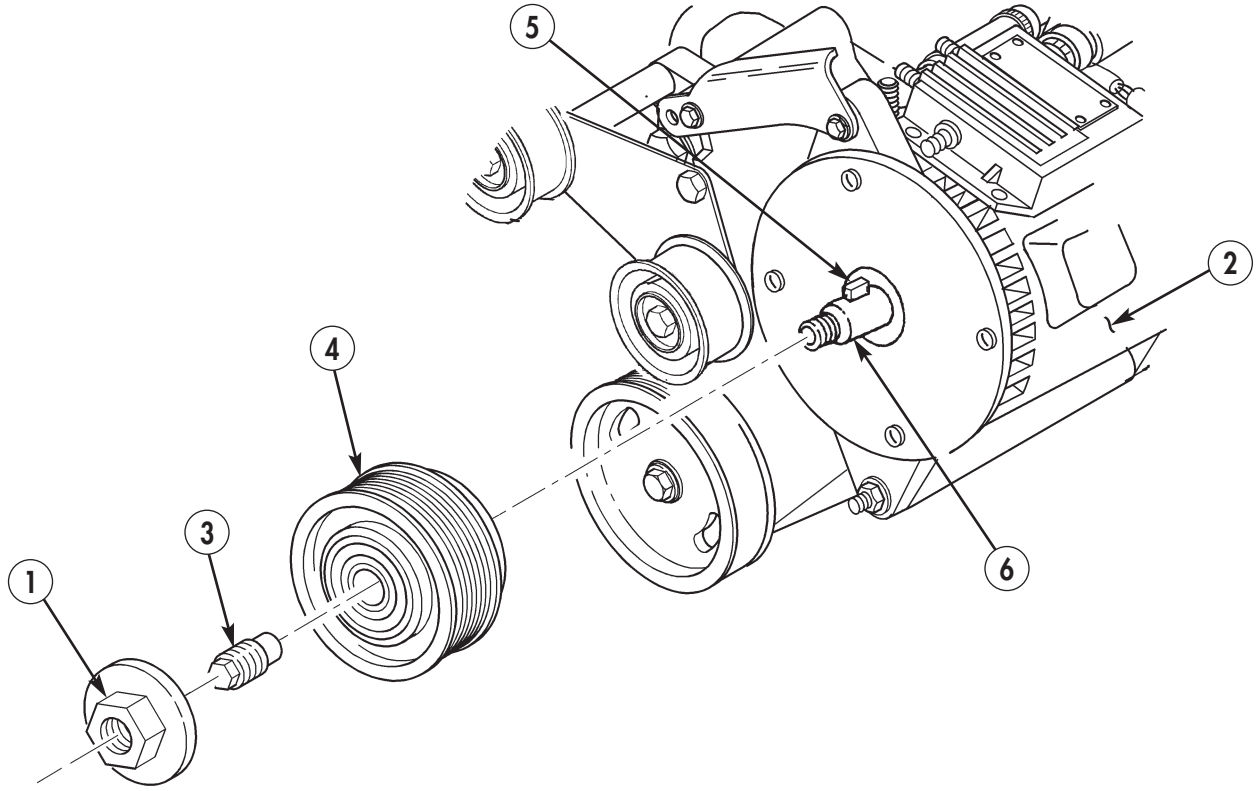

FOLLOW-ON TASK: Install serpentine drivebelt (para. 3-81.1).

4-3. ALTERNATOR/POWER STEERING MOUNTING BRACKET REPLACEMENT (SERIAL NUMBERS 196900 AND BELOW)

This task covers:

a. Removal **b. Installation**

INITIAL SETUP:

Tools

General mechanic's tool kit: automotive (Appendix B, Item 1)
Maintenance and repair shop equipment: automotive (Appendix B, Item 2)

Materials/Parts

Sealing compound (Appendix C, Item 60)

Manual References

TM 9-2320-387-24P

Equipment Condition

- Alternator removed (para. 4-5).
- Tensioner, idler pulleys, and mounting hardware removed (para. 3-82).
- Power steering pump removed (para. 8-23).

Maintenance Level

Unit

a. Removal

Remove two flanged-head capscrews (3), long flanged-head capscrew (2), and mounting bracket (1) from engine (4).

b. Installation

Apply sealing compund to capscrews (2) and (3), and install mounting bracket (1) on engine (4) with two flanged-head capscrews (3) and long flanged-head capscrew (2). Tighten capscrews (3) and (2) to 48 lb-ft (65 N·m).

4-3. ALTERNATOR/POWER STEERING MOUNTING BRACKET REPLACEMENT (SERIAL NUMBERS 196900 AND BELOW) (Cont'd)

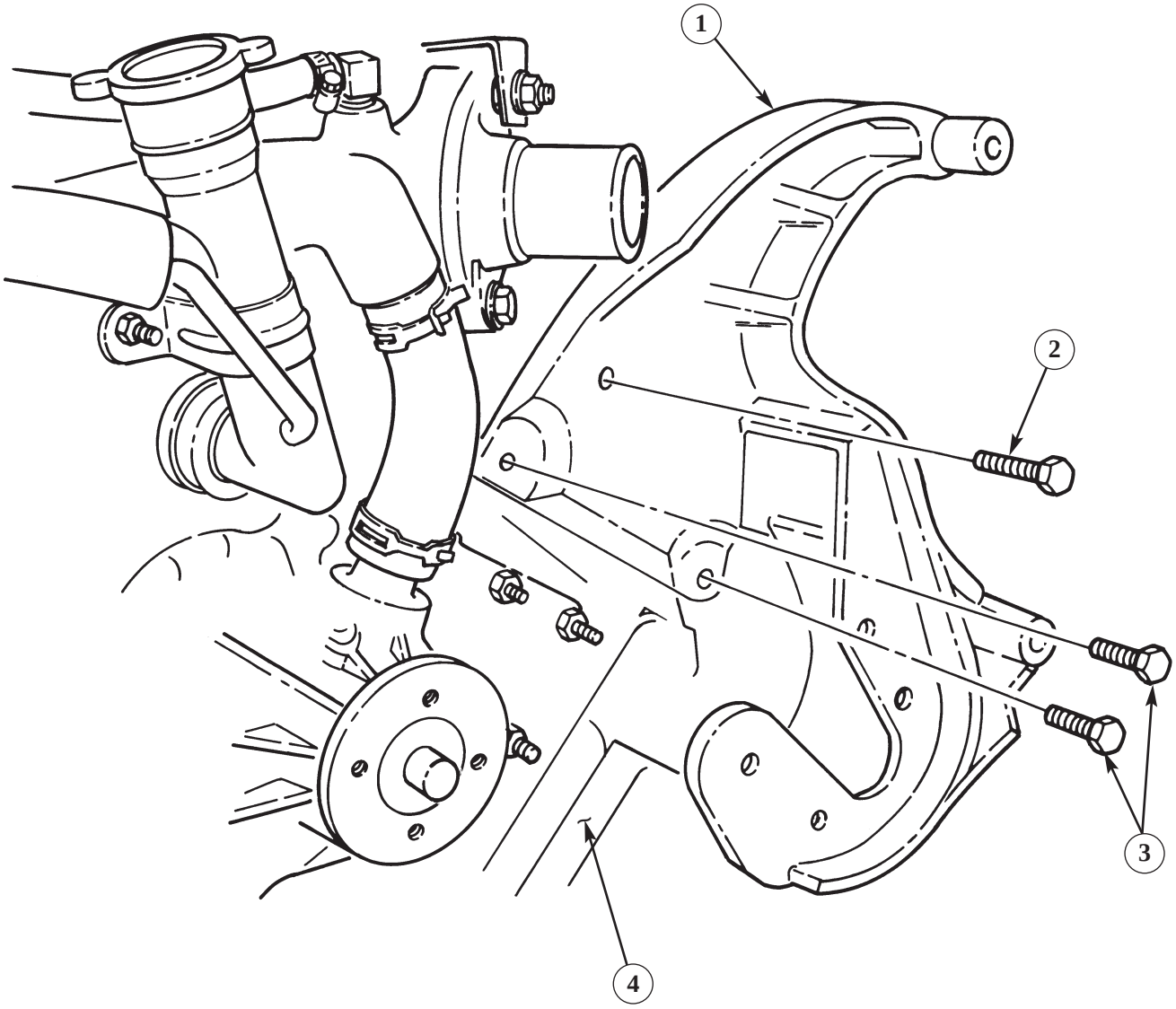

FOLLOW-ON TASKS:
- Install power steering pump (para. 8-23).
- Install tensioner, idler pulleys, and mounting hardware (para. 3-82).
- Install alternator (para 4-5).

4-3.1. ALTERNATOR/POWER STEERING MOUNTING BRACKET REPLACEMENT (SERIAL NUMBERS 196901 AND ABOVE)

This task covers:

a. Removal **b. Installation**

INITIAL SETUP:

Tools

General mechanic's tool kit:
automotive (Appendix B, Item 1)
Maintenance and repair shop equipment:
automotive (Appendix B, Item 2)

Materials/Parts

Adhesive sealant (Appendix C, Item 3.1)

Manual References

TM 9-2320-387-10
TM 9-2320-387-24P

Equipment Condition

- Hood open and secured (TM 9-2320-387-10).
- Alternator removed (para. 4-5).
- Tensioner and mounting hardware removed (para. 3-82.1).
- Idler pulleys and mounting hardware removed (para. 3-82.6).
- Power steering pump and pulley removed (para. 8-23.1).

Maintenance Level

Unit

a. Removal

1. Remove three screws (2) and alternator/power steering mounting bracket (1) from engine (3).

b. Installation

1. Apply adhesive sealant to threads of three screws (2) and install alternator/power steering mounting bracket (1) on engine (3) with screws (2).

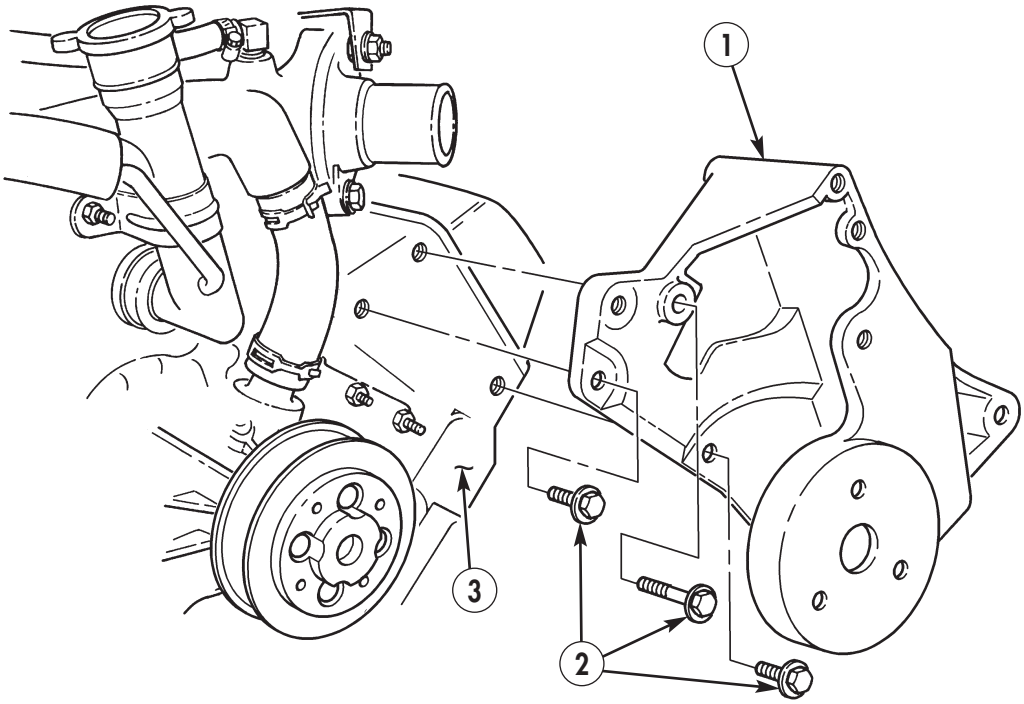

FOLLOW-ON TASKS:
- Install alternator (para. 4-5).
- Install tensioner and mounting hardware (para. 3-82.1).
- Install idler pulleys and mounting hardware (para. 3-82.6).
- Install power steering pump and pulley (para. 8-23.1).
- Lower and secure hood (TM 9-2320-387-10).

4-4. PROTECTIVE CONTROL BOX (PCB) REPLACEMENT

This task covers:

a. Removal **b. Installation**

INITIAL SETUP:

Tools

General mechanic's tool kit:
automotive (Appendix B, Item 1)
Maintenance and repair shop equipment:
automotive (Appendix B, Item 2)

Materials/Parts

Silicone compound (Appendix C, Item 74)
Four nut and lockwasher assemblies
(Appendix G, Item 244)

Personnel Required

One mechanic
One assistant

Manual References

TM 9-2320-387-10
TM 9-2320-387-24P

Equipment Condition

- Battery ground cable disconnected (para. 4-68).
- Hood raised and secured (TM 9-2320-387-10).

Maintenance Level

Unit

CAUTION

The control box must be supported from inside the vehicle during removal and installation. Failure to do this may result in damage to Protective Control Box (PCB).

a. Removal

1. From inside the vehicle, disconnect body wiring harness cannon plug (4) from PCB (5).
2. Working under hood, disconnect engine wiring harness cannon plug (6) from PCB connector (7).

NOTE

Perform step 3 for M1114 vehicles. Perform step 4 for M1113 vehicles.

3. Remove four screws (5.1) and PCB (5) from cowl (3).
4. Remove four nut and lockwasher assemblies (1) and PCB (5) from cowl (3). Discard nut and lock-washer assemblies (1).

b. Installation

1. Position PCB (5) under instrument panel (2) against cowl (3).

NOTE

Perform step 2 for M1114 vehicles. Perform step 2.1 for M1113 vehicles.

2. From under hood, install PCB (5) on cowl (3) with four screws (5.1). Tighten screws (5.1) to 6 lb-ft (8 N·m).

2.1. From under hood, install PCB (5) on cowl (3) with four nut and lockwasher assemblies (1). Tighten nut and lockwashers assemblies (1) to 6 lb-ft (8 N·m).

3. Fill cannon plug (6) and PCB connector (7) to capacity with silicone compound.
4. Connect engine wiring harness cannon plug (6) to PCB connector (7).
5. From inside vehicle, connect body wiring harness cannon plug (4) to PCB (5).

4-4. PROTECTIVE CONTROL BOX (PCB) REPLACEMENT (Cont'd)

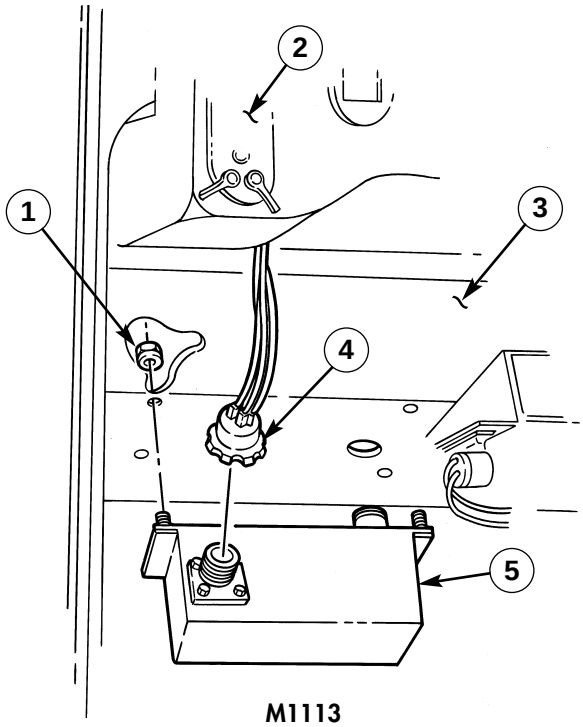

M1113

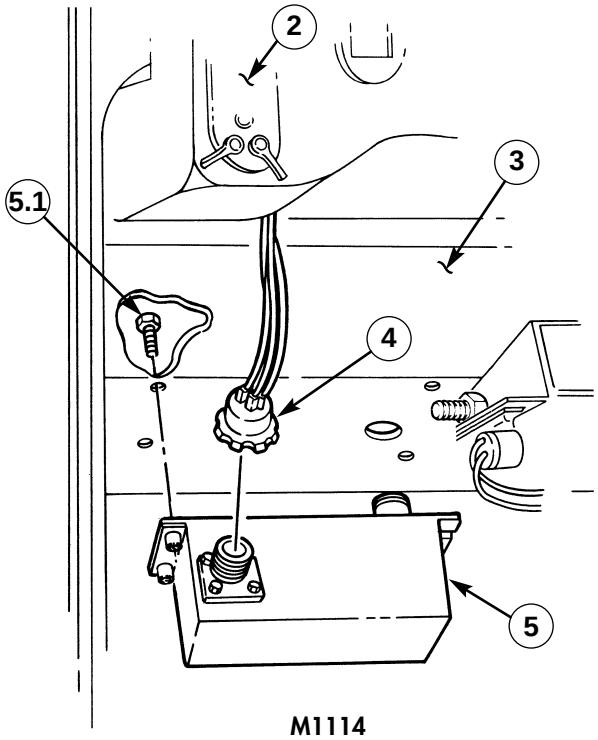

M1114

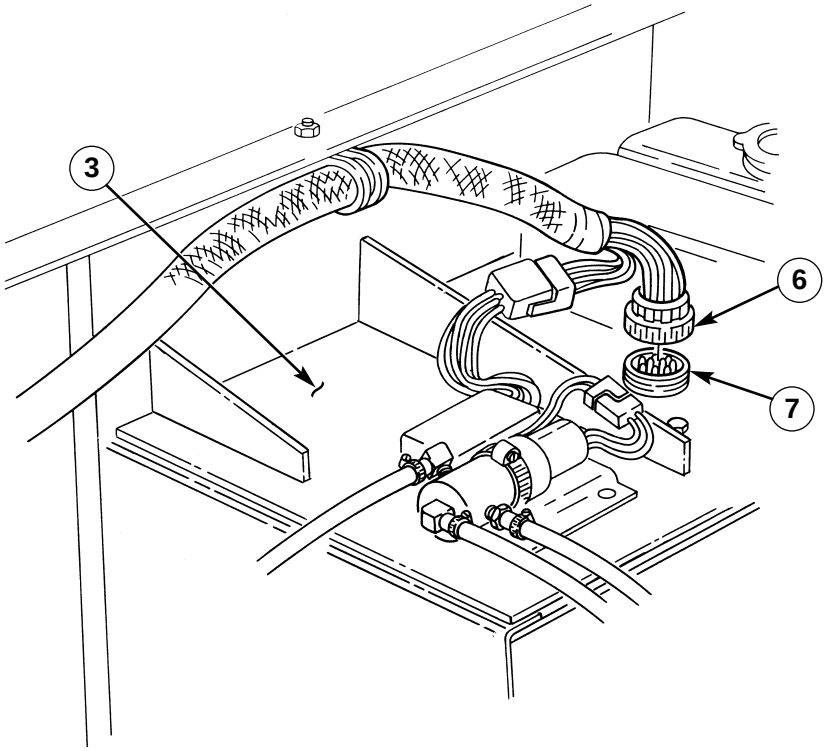

FOLLOW-ON TASKS: • Connect battery ground cable (para. 4-68).
• Lower and secure hood (TM 9-2320-387-10).

4-5. 200-AMPERE DUAL VOLTAGE ALTERNATOR REPLACEMENT

This task covers:

a. Removal **b. Installation**

INITIAL SETUP:

Tools
General mechanic's tool kit:
automotive (Appendix B, Item 1)
Maintenance and repair shop equipment:
automotive (Appendix B, Item 2)

Materials/Parts
Lockwasher (Appendix G, Item 180)
Lockwasher (Appendix G, Item 181)
Lockwasher (Appendix G, Item 182)
Lockwasher (Appendix G, Item 144)
Grease (Appendix C, Item 36)

Personnel Required
One mechanic
One assistant

Manual References
TM 9-2320-387-24P

Equipment Condition
Voltage regulator removed (para. 4-8).

General Safety Instructions
Alternator must be supported during removal and installation.

Maintenance Level
Unit

NOTE

Prior to removal, tag leads for installation.

a. Removal

1. Remove nut (14), lockwasher (13), washer (12), and ground strap (11) from ground stud (10). Discard lockwasher (13).
2. Slide back rubber boot (15) and remove nut (1), lockwasher (2), washer (3), and alternator positive cable lead 6 (4) from positive stud (7). Discard lockwasher (2).
3. Position 3/8-in. breaker bar or, as appropriate, a 1/2-in. ratchet wrench on belt tensioner (16), move tensioner (16) clockwise, and remove drivebelt (8) from alternator pulley (9).

WARNING

Alternator must be supported during removal. Failure to support alternator may cause injury to personnel or damage to equipment.

4. Remove nut (29), lockwasher (28), washer (27), two screws (19), washers (17), lockwasher (18), and alternator (25) from support bracket (23) and mounting bracket (26). Discard lockwashers (28) and (18).
5. Remove three capscrews (20), washers (21), bushings (24), and fan guard assembly (22) from alternator (25).
6. Remove alternator pulley (9) (para. 4-2).

4-5. 200-AMPERE DUAL VOLTAGE ALTERNATOR REPLACEMENT (Cont'd)

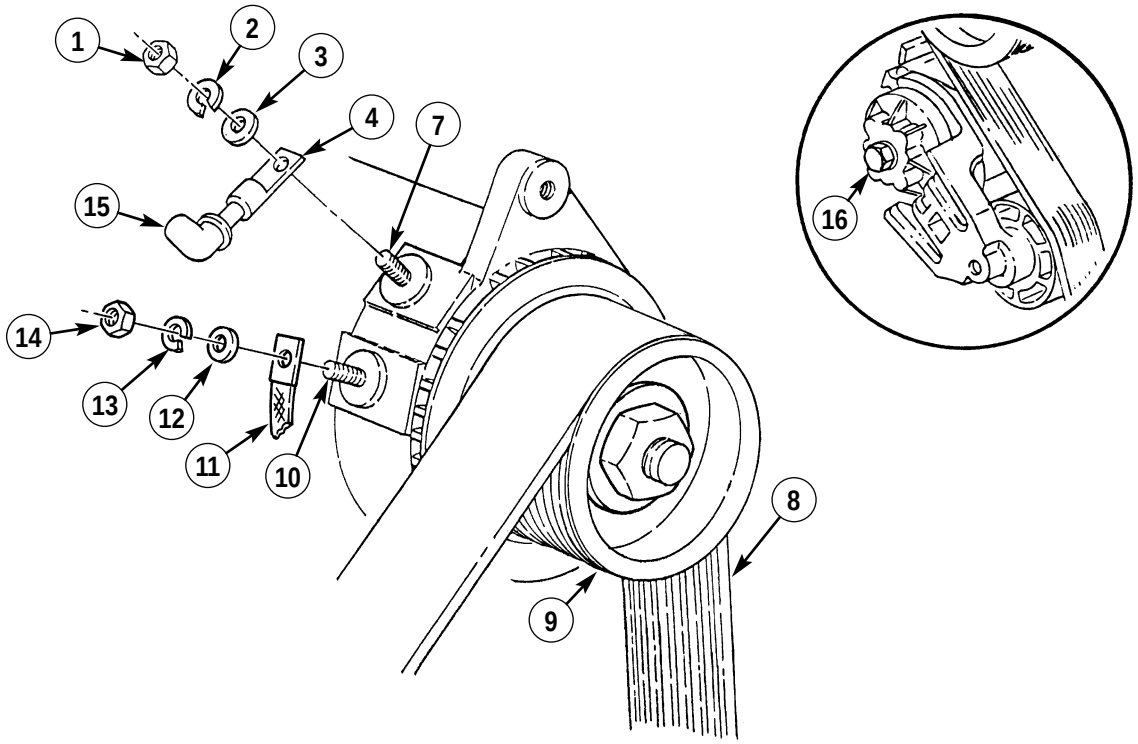

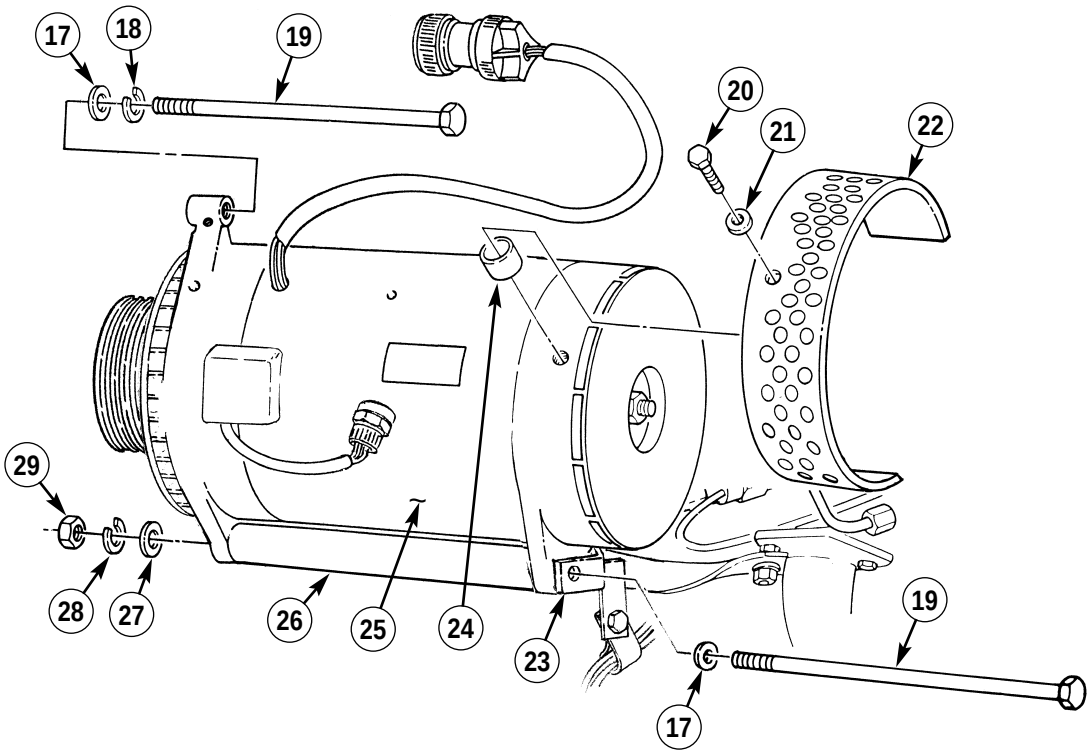

4-5. 200-AMPERE DUAL VOLTAGE ALTERNATOR REPLACEMENT (Cont'd)

b. Installation

1. Install alternator pulley (22) (para. 4-2).
2. Install fan guard assembly (6) on alternator (9) with three bushings (8), washers (5), and capscrews (4).

WARNING

Alternator must be supported during installation. Failure to support alternator may cause injury to personnel or damage to equipment.

3. Position alternator (9) on mounting bracket (10).

NOTE

Ensure terminals are clean before connections are made.

4. Install support bracket (7) on alternator (9) and alternator mounting bracket (10) with lockwasher (2), two washers (1), capscrews (3), washer (11), lockwasher (12), and nut (13).
5. Install positive cable lead 6 (17) on positive stud (20) with washer (16), lockwasher (15), and nut (14). Tighten nut (14) to 10-15 lb-ft (14-20 N·m).
6. Apply grease to positive stud (20), positive cable lead 6 (17), and inside of rubber boot (28), slide rubber boot (28) over stud (20).
7. Install ground strap (24) on ground stud (23) with washer (25), lockwasher (26), and nut (27). Tighten nut (27) to 8-12 lb-ft (11-16 N·m).
8. Position 3/8-in. breaker bar or, as appropriate, a 1/2-in. ratchet wrench on belt tensioner (29), move tensioner (29) clockwise, and install drivebelt (21) on alternator pulley (22).

4-5. 200-AMPERE DUAL VOLTAGE ALTERNATOR REPLACEMENT (Cont'd)

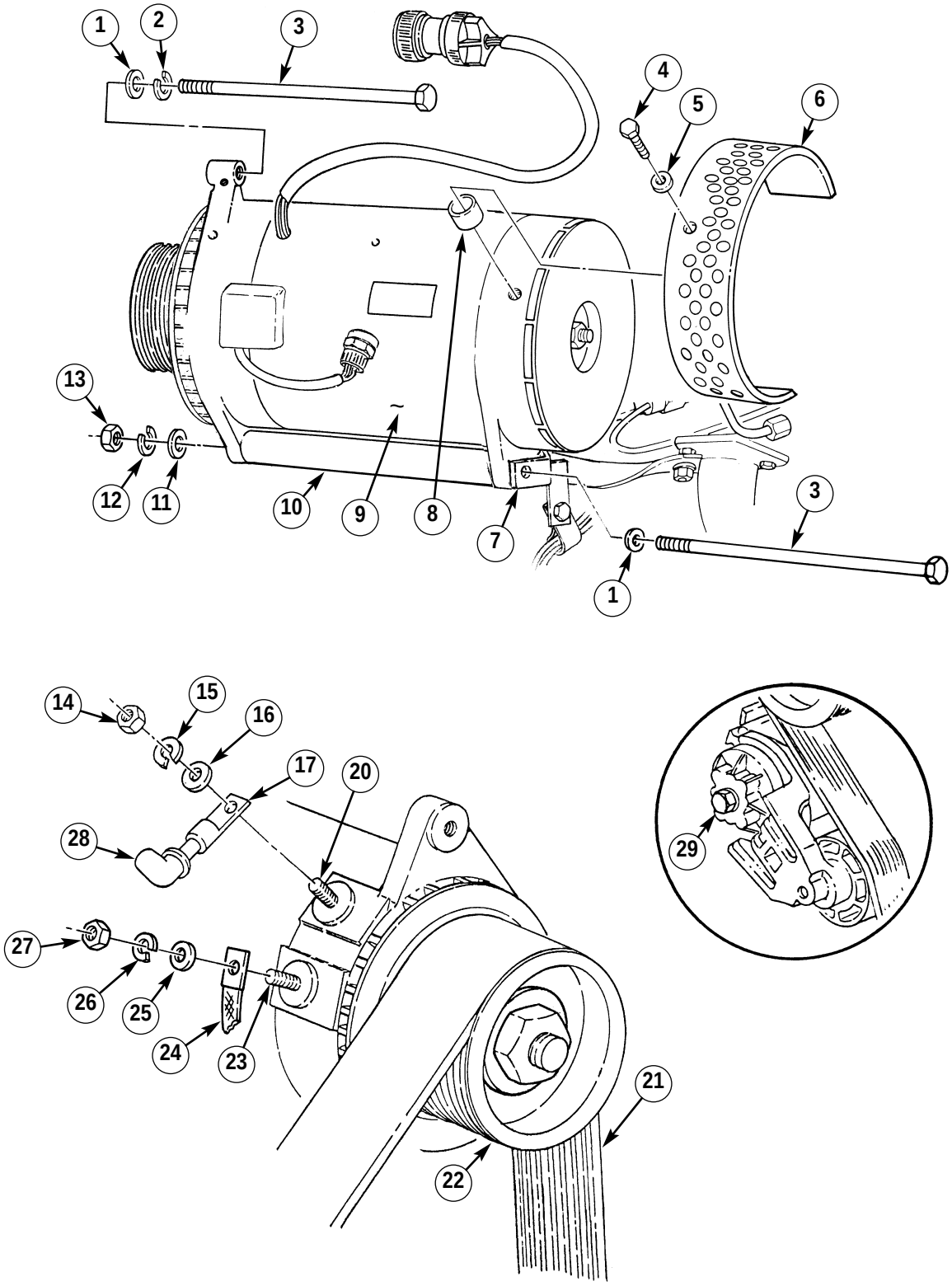

FOLLOW-ON TASK: Install voltage regulator (para. 4-8).

4-6. 200-AMPERE DUAL VOLTAGE ALTERNATOR CABLE REPLACEMENT

This task covers:

a. Removal **b. Installation**

INITIAL SETUP:

Tools

General mechanic's tool kit:
automotive (Appendix B, Item 1)
Maintenance and repair shop equipment:
automotive (Appendix B, Item 2)

Materials/Parts

Lockwasher (Appendix G, Item 180)
Four tiedown straps (Appendix G, Item 326)
Lockwasher (Appendix G, Item 185)
Lockwasher (Appendix G, Item 187)

Manual References

TM 9-2320-387-10
TM 9-2320-387-24P

Equipment Condition

- Hood raised and secured (TM 9-2320-387-10).
- Battery ground cables disconnected (para. 4-68).
- Engine access cover removed (para. 10-22).

Maintenance Level

Unit

NOTE

Prior to removal, tag leads for installation.

a. Removal

1. Slide back rubber boot (5) and remove nut (8), lockwasher (7), washer (6), cable (4), nut (3), and washer (2) from positive stud (1). Discard lockwasher (7).
2. Remove capscrew (9) and clamp (10) from water crossover bracket (11) and separate cable (4) from cables and clamp (10).
3. Remove nut (14), lockwasher (13), and clamp (15) from stud (12) and separate cable (4) from cables and clamp (15). Discard lockwasher (13).
4. Remove four tiedown straps (16). Discard tiedown straps (16).
5. Remove screw (17) and clamp (19) from bracket (20) and remove cable (4) from clamp (19).
6. Remove nut (27), lockwasher (26), washer (25), and cable (4) from buss bar (24) on battery box (23). Discard lockwasher (26).
7. Remove cable (4) from grommet (28) and vehicle.

b. Installation

NOTE

Ensure terminals are clean before connections are made.

1. Install cable (4) through grommet (28) in battery box (23).

1.1 Install cable (4) on buss bar (24) with washer (25), lockwasher (26), and nut (27).

2. Route cable (4) through clamp (19) and install clamp (19) to bracket (20) with screw (17).
3. Route cable (4) through clamp (15) and install clamp (15) on stud (12) with lockwasher (13) and nut (14).
4. Route cable (4) through clamp (10) and install clamp (10) on water crossover bracket (11) with capscrew (9).
5. Install washer (2), nut (3), and cable (4) on positive stud (1) with washer (6), lockwasher (7), and nut (8). Tighten nut (8) to 10-15 lb-ft (14-20 N·m) and slide rubber boot (5) over nut (8).
6. Install four tiedown straps (16) on cable (4).

4-6. 200-AMPERE DUAL VOLTAGE ALTERNATOR CABLE REPLACEMENT (Cont'd)

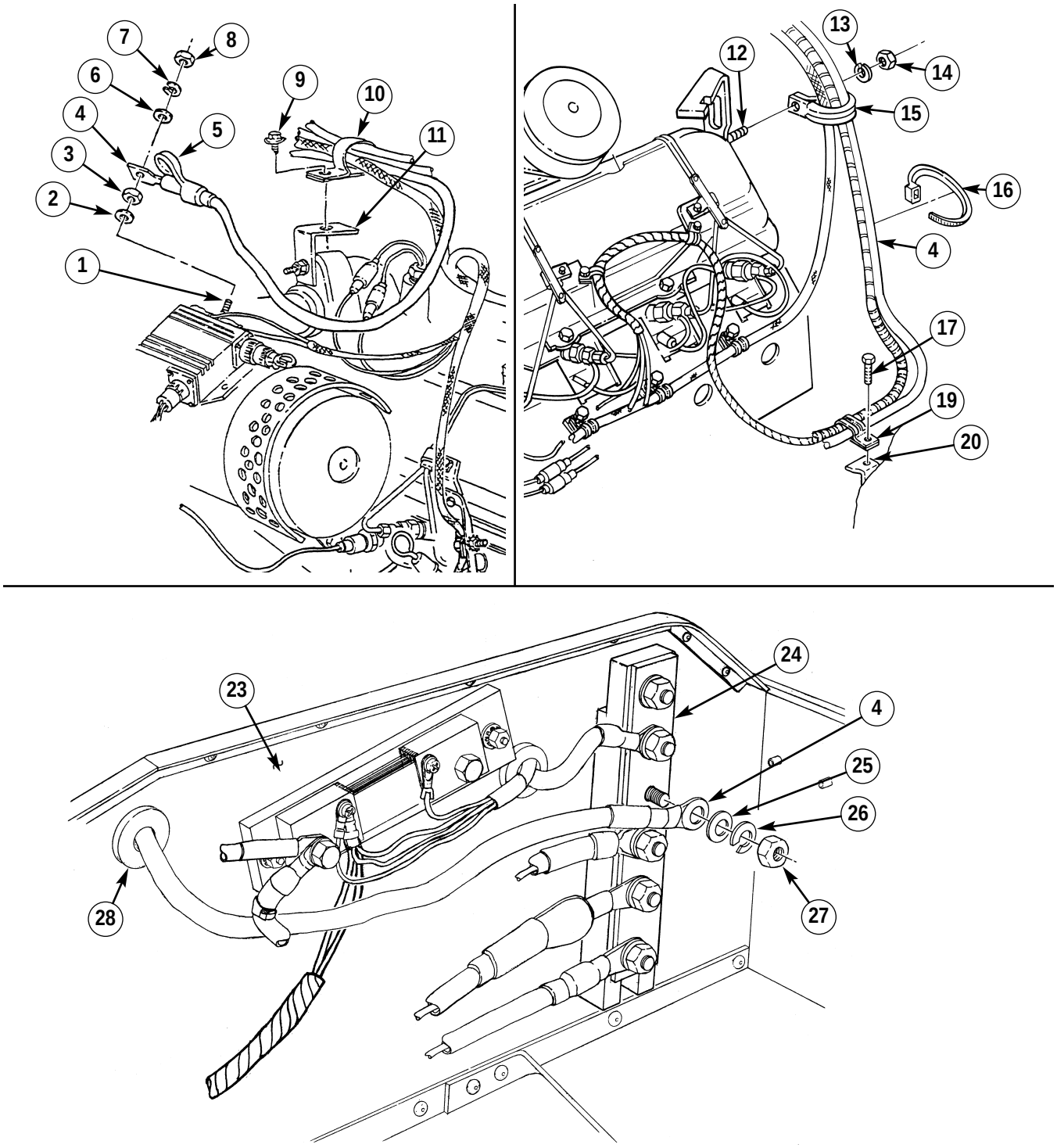

FOLLOW-ON TASKS:
- Connect battery ground cables (para. 4-68).
- Install engine access cover (para. 10-22).
- Lower and secure hood (TM 9-2320-387-10).
- Start engine (TM 9-2320-387-10) and check operation of voltmeter gauge.

4-7. 200-AMPERE DUAL VOLTAGE UMBILICAL POWER CABLE REPLACEMENT

This task covers:

a. Removal **b. Installation**

INITIAL SETUP:

Applicable Models
M1113

Tools
General mechanic's tool kit:
automotive (Appendix B, Item 1)

Materials/Parts
Two lockwashers (Appendix G, Item 149)
Lockwasher (Appendix G, Item 187)
Lockwasher (Appendix G, Item 153)
Sealing compound (Appendix C, Item 64)

Personnel Required
One mechanic
One assistant

Manual References
TM 9-2320-387-24P

Equipment Condition
- Batteries removed (para. 4-74).
- Fixed rear door removed (para. 10-20).

Maintenance Level
Unit

NOTE

Prior to removal, tag leads for installation.

a. Removal

1. Remove nut (5), lockwasher (4), washer (3), and positive power cable (2) from buss bar (1). Discard lockwasher (4).
2. Remove capscrew (6), lockwasher (7), negative power cable (8), and two cables (9) from shunt (10). Discard lockwasher (7).
3. Remove five capscrews (20), two lockwashers (19), washers (18), and coverplate (17) from B-beam (12). Discard lockwashers (19).
4. Remove two nuts (15), washers (14), capscrews (25), washers (26), and mounting bracket (27) from coverplate (17).
5. Remove nut (28), screw (23), and cover (22) with cover chain (21) from mounting bracket (27).
6. Remove cover (22) with cover chain (21) from umbilical power cable assembly (29).
7. Remove four nuts (30), screws (24), and mounting bracket (27) from umbilical power cable assembly (29).
8. Pull umbilical power cable assembly (29) through grommet (11) and coverplate (17), and remove from vehicle (16).
9. Remove grommet (11) from battery box (13).

4-7. 200-AMPERE DUAL VOLTAGE UMBILICAL POWER CABLE REPLACEMENT (Cont'd)

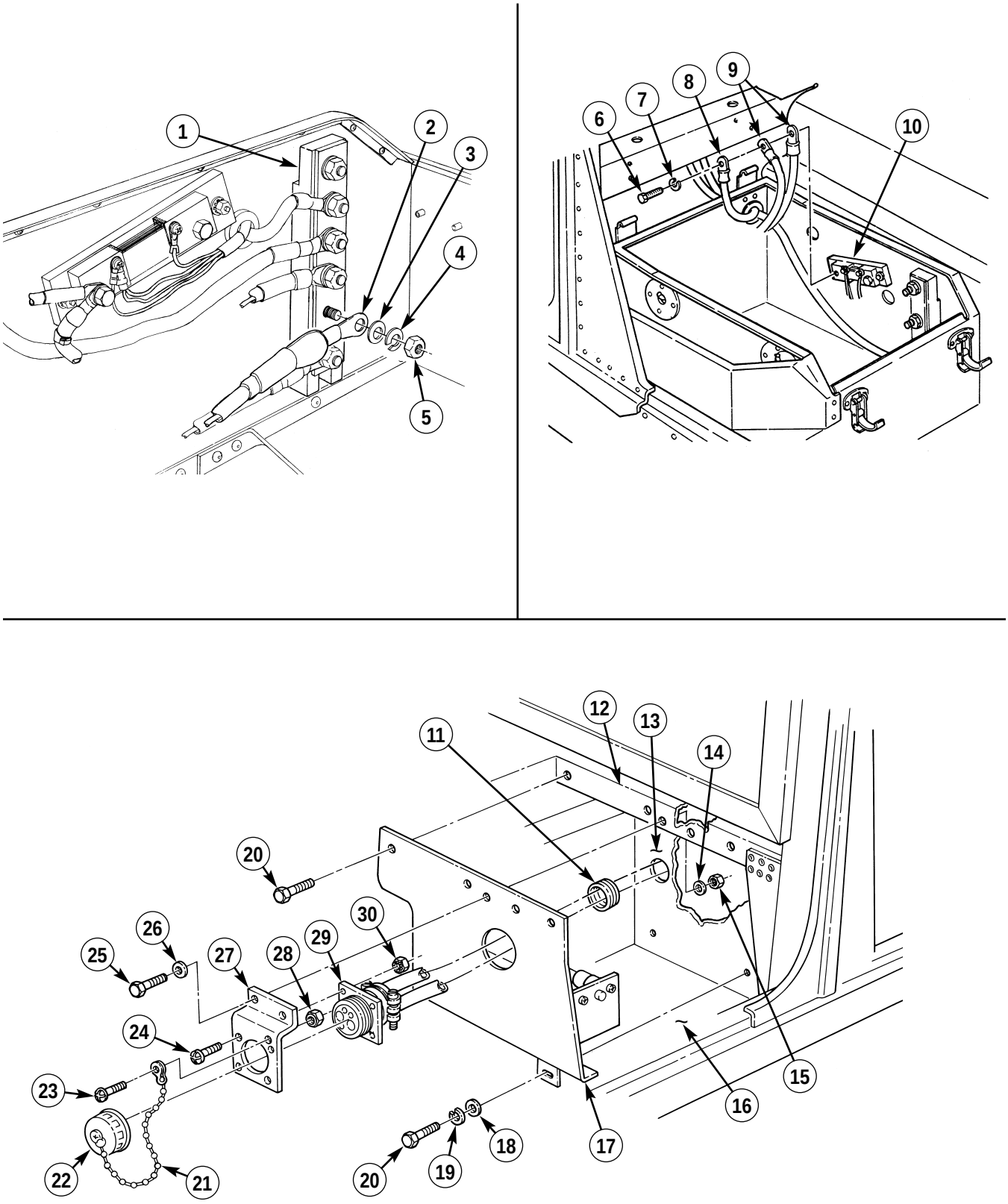

4-7. 200-AMPERE DUAL VOLTAGE UMBILICAL POWER CABLE REPLACEMENT (Cont'd)

b. Installation

1. Install grommet (5) on battery box (7).
2. Route umbilical power cable assembly (14) through coverplate (11) and grommet (5), and position in approximate mounting location on vehicle (10).
3. Install cover chain (17) on mounting bracket (16) with screw (19) and nut (15).
4. Install umbilical power cable assembly (14) on mounting bracket (16) with four screws (20) and nuts (4).
5. Install cover (18) on umbilical power cable assembly (14).
6. Install coverplate (11) on B-beam (6) with two washers (12), lockwashers (13), and five capscrews (3).
7. Install mounting bracket (16) on coverplate (11) with two washers (2), capscrews (1), washers (8), and nuts (9).
8. Install two cables (24) and negative power cable (23) on shunt (25) with lockwasher (22) and capscrew (21).
9. Install positive power cable (27) on buss bar (26) with washer (28), lockwasher (29), and nut (30).
10. Apply silicone compound to cable (27), coating all exposed metallic surfaces.

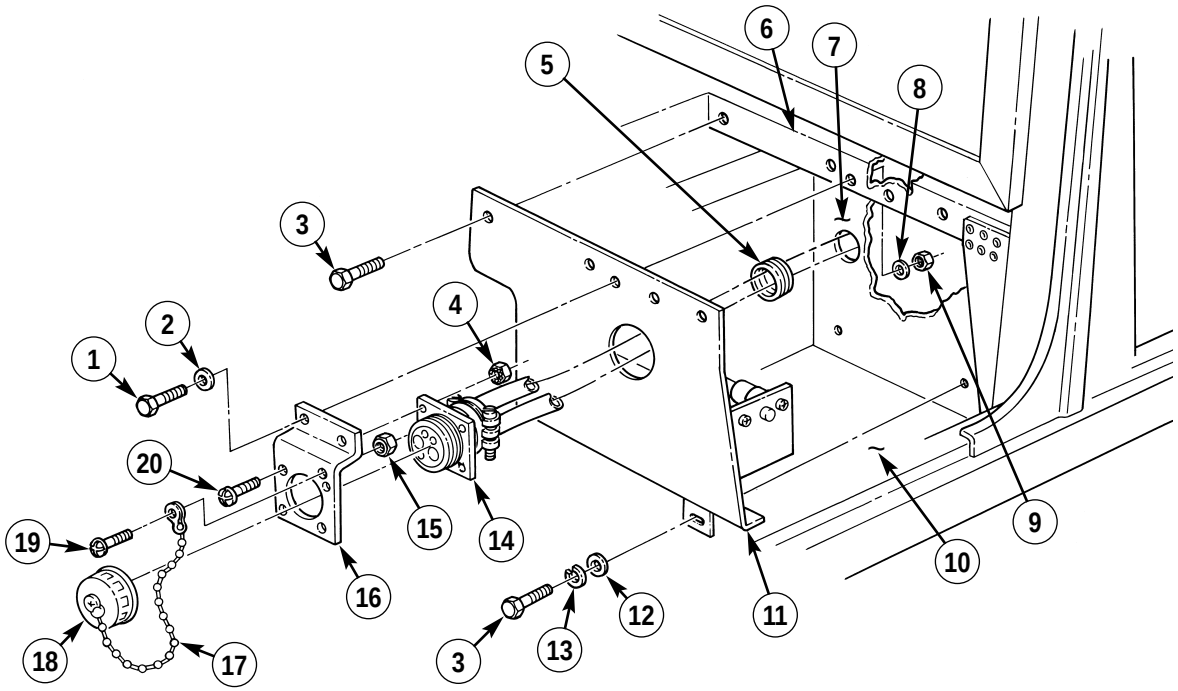

4-7. 200-AMPERE DUAL VOLTAGE UMBILICAL POWER CABLE REPLACEMENT (Cont'd)

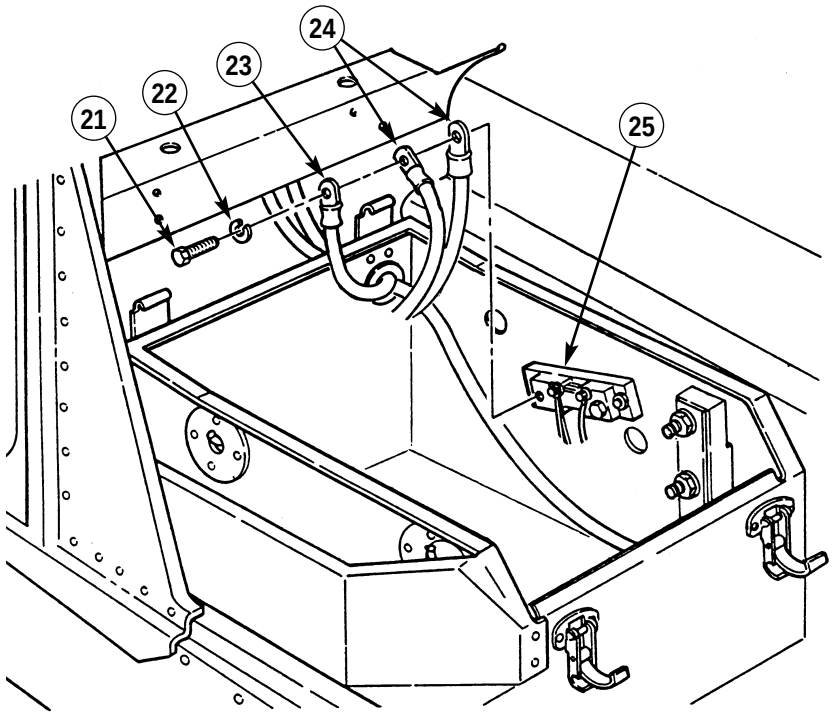

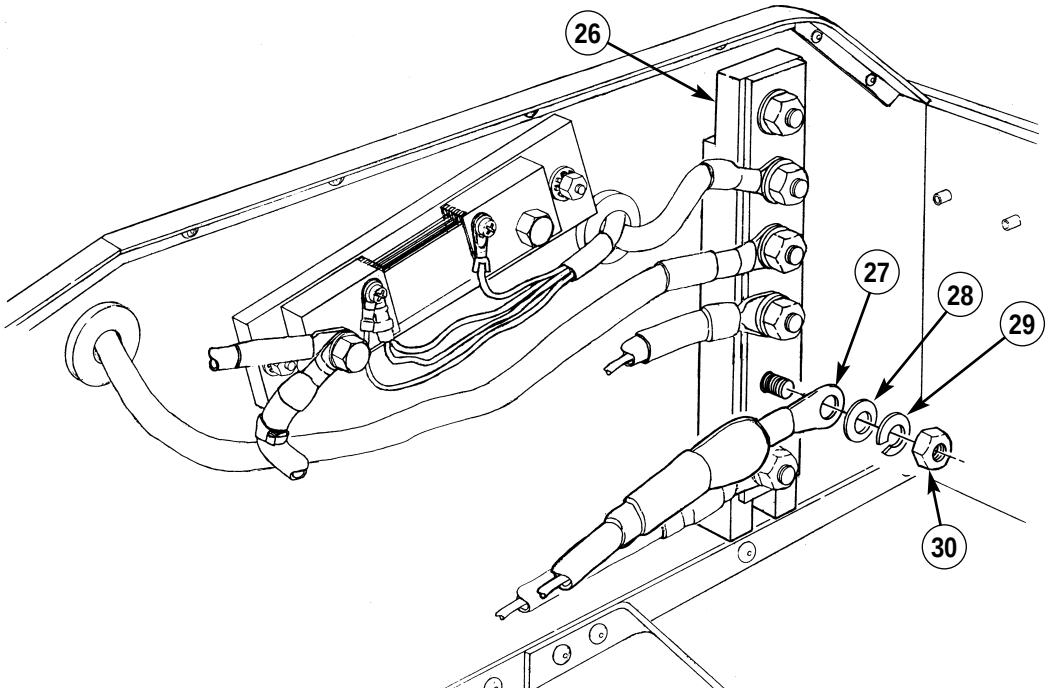

FOLLOW-ON TASKS: • Install fixed rear door (para. 10-20).
• Install batteries (para. 4-74).

4-8. 200-AMPERE DUAL VOLTAGE REGULATOR REPLACEMENT

This task covers:

a. Removal **b. Installation**

INITIAL SETUP:

Tools

General mechanic's tool kit:
automotive (Appendix B, Item 1)
Maintenance and repair shop equipment:
automotive (Appendix B, Item 2)

Materials/Parts

Two lockwashers (Appendix G, Item 177)
Lockwasher (Appendix G, Item 179)
Grease (Appendix C, Item 25)

Manual References

TM 9-2320-387-10
TM 9-2320-387-24P

Equipment Condition

- Battery ground cables disconnected (para. 4-68).
- Hood raised and secured (TM 9-2320-387-10).

Maintenance Level

Unit

NOTE

Prior to removal, tag leads for installation.

a. Removal

1. Disconnect regulator plug (13) from voltage regulator (11).
2. Slide back rubber boot (3) and remove nut (2), lead 5A (1) and washer (22.1) from IGN terminal (22).
3. Slide back rubber boot (4) and remove nut (5), lead 2A (6) and washer (6.1) from yellow (AC) terminal (7).
4. Remove nut (20) and ground wire (12) from 14-volt stud (21).
5. Remove screw (8), lockwasher (9), washer (10), and ground wire (12) from voltage regulator (11). Discard lockwasher (9).
6. Disconnect alternator connector (15) from connector (16) on voltage regulator (11).
7. Remove two screws (19), lockwashers (18), washers (17), and voltage regulator (11) from alternator (14). Discard lockwashers (18).

b. Installation

1. Install voltage regulator (11) on alternator (14) with two washers (17), lockwashers (18), and screws (19). Tighten screws (19) to 30-34 lb-in. (3-4 N·m).
2. Connect alternator connector (15) to connector (16) on voltage regulator (11).
3. Install washer (22.1), lead 5A (1) and nut (2) on IGN terminal (22). Tighten nut (2) to 23-27 lb-in. (2.6-3.0 N·m).
4. Apply grease to IGN terminal (22), lead 5A (1), and inside of boot (3), and slide boot (3) over IGN terminal (22).
5. Install washer (6.1), lead 2A (6) and nut (5) on yellow (AC) terminal (7). Tighten nut (5) to 18-22 lb-in. (2.0-2.5 N·m).
6. Apply grease to yellow (AC) terminal (7), lead 2A (6), and inside of boot (4), and slide boot (4) over yellow (AC) terminal (7).
7. Connect regulator plug (13) to voltage regulator (11).
8. Install one end of ground wire (12) on 14-volt stud (21) on voltage regulator (11) with nut (20). Tighten nut (20) to 45-55 lb-in. (5-6 N·m).
9. Install other end of ground wire (12) on voltage regulator (11) with washer (10), lockwasher (9), and screw (8). Tighten screw (8) to 88-94 lb-in. (10-11 N·m).

4-8. 200-AMPERE DUAL VOLTAGE REGULATOR REPLACEMENT (Cont'd)

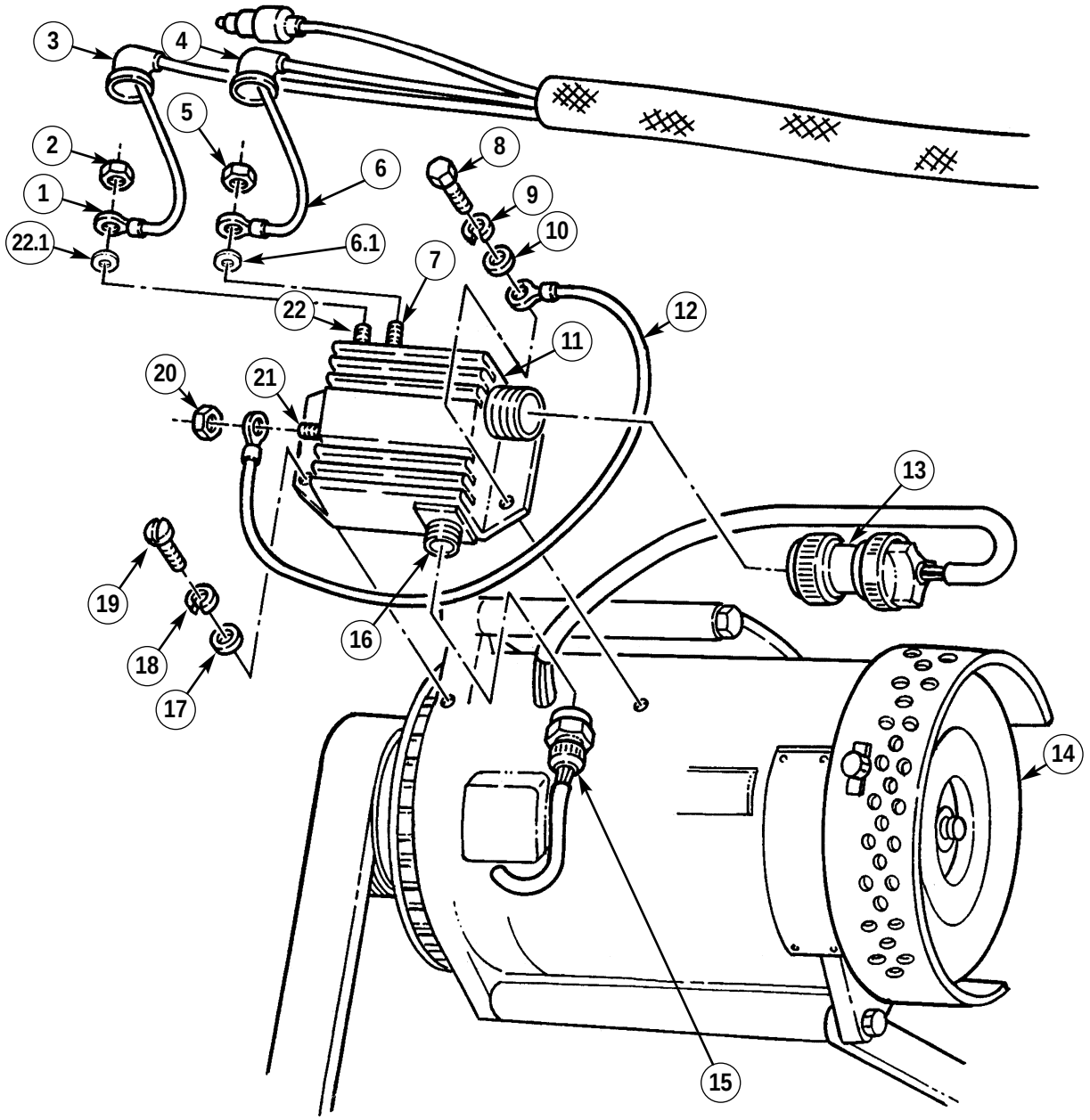

FOLLOW-ON TASKS:
- Connect battery ground cables (para. 4-68).
- Lower and secure hood (TM 9-2320-387-10).

4-8.1. 400-AMPERE DUAL VOLTAGE REGULATOR REPLACEMENT

This task covers:

a. Removal **b. Installation**

INITIAL SETUP:

Tools

General mechanic's tool kit:
automotive (Appendix B, Item 1)
Maintenance and repair shop equipment:
automotive (Appendix B, Item 2)

Materials/Parts

Two lockwashers (Appendix G, Item 181)
Lockwasher (Appendix G, Item 179)
Grease (Appendix C, Item 36)

Manual References

TM 9-2320-387-10
TM 9-2320-387-24P

Equipment Condition

- Battery ground cables disconnected (para. 4-68).
- Hood raised and secured (TM 9-2320-387-10).

a. Removal

NOTE

Prior to removal, tag leads for installation.

1. Disconnect regulator plugs (12) and (13) from connectors (9) and (10) on voltage regulator (11).
2. Slide back rubber boot (5) and remove nut (4), lead 5A (6), and washer (7) from red terminal (8) on voltage regulator (11).
3. Slide back rubber boot (2) and remove nut (1), lead 2A (3), and washer (24) from yellow terminal (25) on voltage regulator (11).
4. Slide back rubber boot (20) and remove nut (19), lead 68A (18), and washer (17) from 14 volt output terminal (15) on voltage regulator (11).
5. Remove three screws (23), lockwashers (22), washers (21), voltage regulator (11), and three spacers (16) from alternator (14). Discard lockwashers (22).

b. Installation

1. Install three spacers (16) and voltage regulator (11) on alternator (14) with three washers (21), lockwashers (22), and screws (23). Tighten screws (23) to 30-34 lb-in. (3-4 N•m).
2. Install washer (7), lead 5A (6), and nut (4) on red terminal (8) of voltage regulator (11). Tighten nut (4) to 35 lb-in. (4 N•m).
3. Apply grease to red terminal (8), lead 5A (6), and inside of rubber boot (5), and slide boot (5) over red terminal (8).
4. Install washer (24), lead 2A (3), and nut (1) on yellow terminal (25) of voltage regulator (11). Tighten nut (1) to 20 lb-in. (2 N•m).
5. Apply grease to yellow terminal (25), lead 2A (3), and inside of rubber boot (2), and slide boot (2) over yellow terminal (25).
6. Install washer (17), lead 68A (18), and nut (19) on 14 volt output terminal (15) of voltage regulator (11). Tighten nut (19) to 50 lb-in. (6 N•m).
7. Apply grease to 14 volt output terminal (15), lead 68A (18), and inside of rubber boot (20), and slide boot (20) over 14 volt output terminal (15).
8. Connect regulator plugs (12) and (13) to connectors (9) and (10) on voltage regulator (11).

4-8.1. 400-AMPERE DUAL VOLTAGE REGULATOR REPLACEMENT (Cont'd)

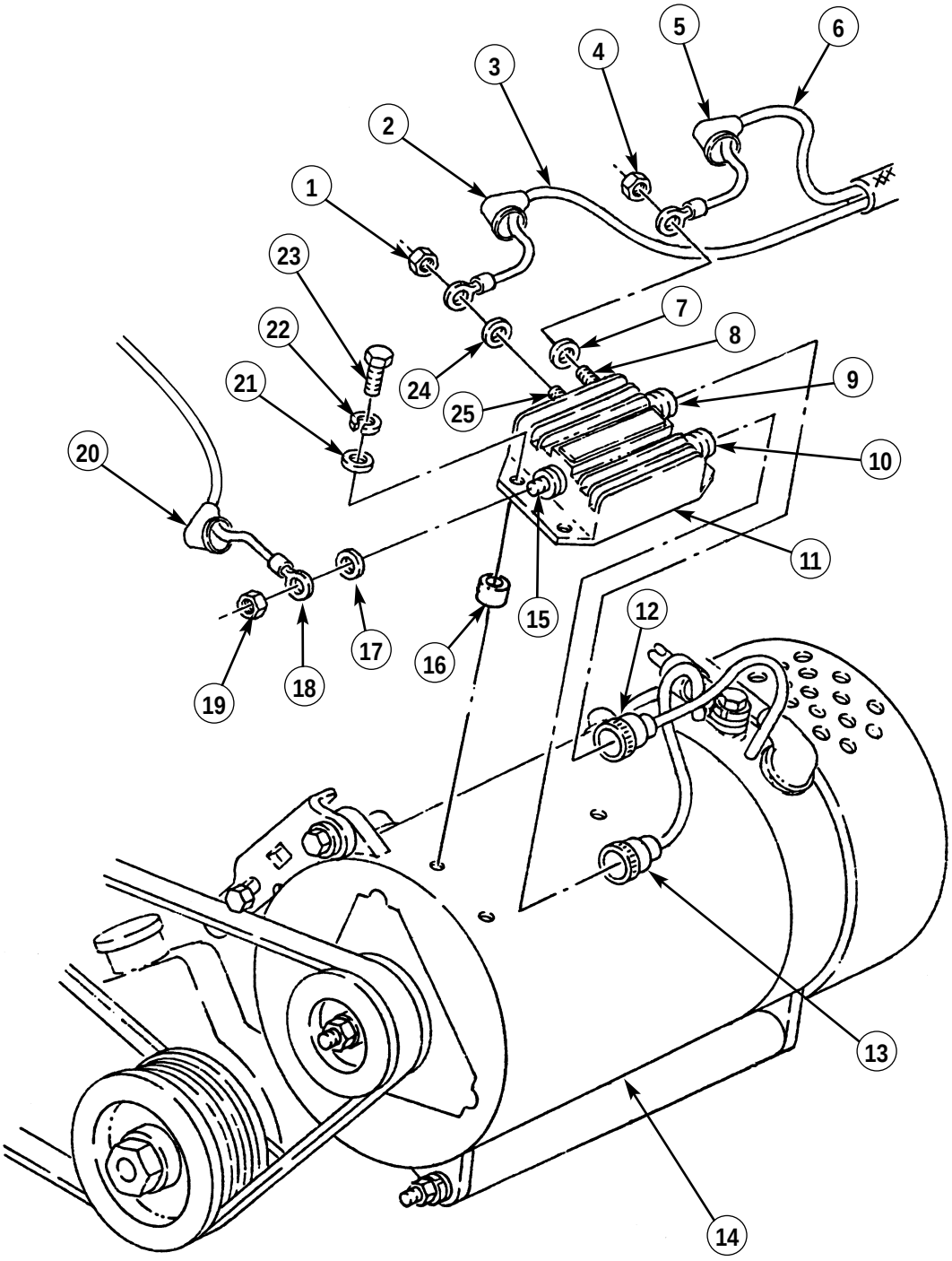

FOLLOW-ON TASKS: • Connect battery ground cables (para. 4-68).
• Lower and secure hood (TM 9-2320-387-10).

4-8.2. 400-AMPERE DUAL VOLTAGE ALTERNATOR CABLE REPLACEMENT

This task covers:

a. Removal **b. Installation**

INITIAL SETUP:

Tools

General mechanic's tool kit:
automotive (Appendix B, Item 1)
Maintenance and repair shop equipment:
automotive (Appendix B, Item 2)

Materials/Parts

Locknut (Appendix G, Item 82)
Two lockwashers (Appendix G, Item 185)
Three tiedown straps (Appendix G, Item 327)
Lockwasher (Appendix G, Item 167)
Five lockwashers (Appendix G, Item 183)

Manual References

TM 9-2320-387-10
TM 9-2320-387-24P

Equipment Condition

- Hood raised and secured (TM 9-2320-387-10).
- Battery ground cables disconnected (para. 4-68).
- Engine access cover removed (para. 10-22).

a. Removal

NOTE

Prior to removal, tag leads for installation.

1. Remove locknut (7), washer (6), screw (3), clamp (4), and cables (2) and (11) from bracket (5). Discard locknut (7).
2. Remove screw (8), clamp (9), and cables (2) and (11) from bracket (10).
3. Remove three tiedown straps (1) from cables (2) and (11). Discard tiedown straps (1).
4. Remove nut (12), lockwasher (13), washer (14), and cable (11) from stud (22) on battery box side panel (15). Discard lockwasher (13).
5. Remove nut (19), lockwasher (20), washer (18), and cable (2) from stud (17) on buss bar (16). Discard lockwasher (20).
6. Remove grommet (21) from battery box side panel (15) and remove cable (2) through battery box side panel (15).

4-8.2. 400-AMPERE DUAL VOLTAGE ALTERNATOR CABLE REPLACEMENT (Cont'd)

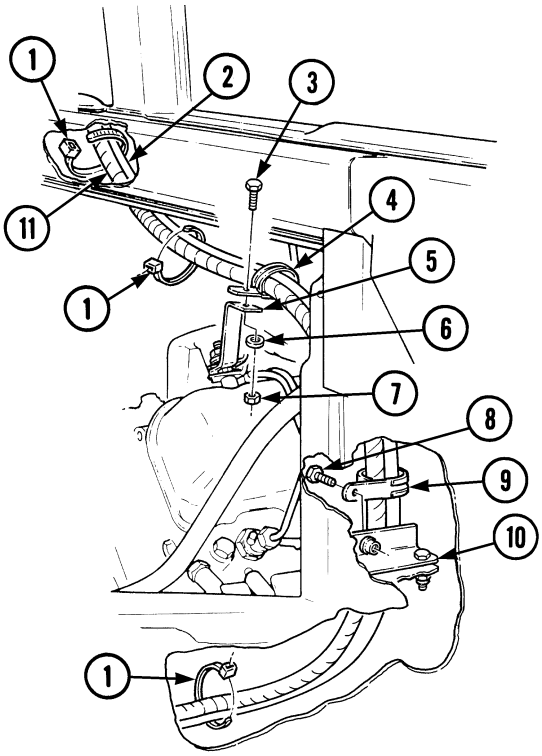

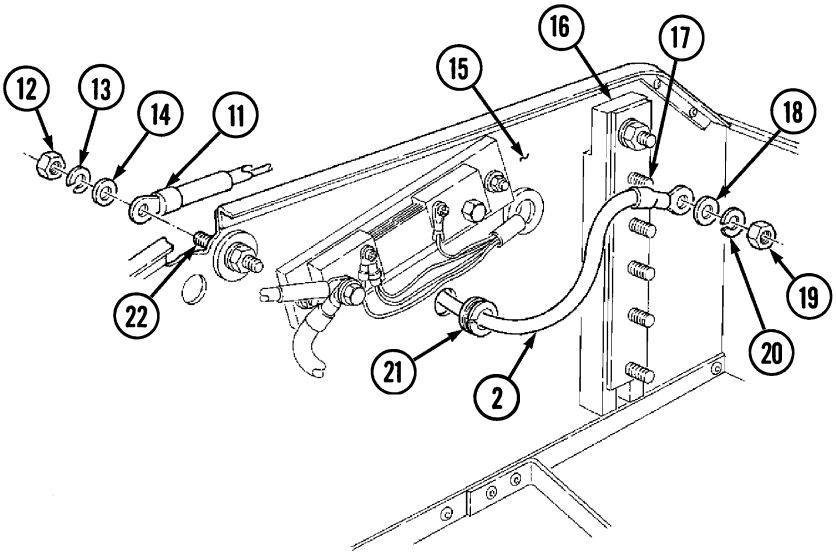

4-8.2. 400-AMPERE DUAL VOLTAGE ALTERNATOR CABLE REPLACEMENT (Cont'd)

7. Remove nut (6), screw (1), and cable (2) with clamp (7) from oil pan bracket (8).
8. Remove nut (3), lockwasher (4), and cable (2) from positive starter terminal (5). Discard lockwasher (4).
9. Remove nut (11), lockwasher (12), washer (13), cable (2), and clamp (9) from stud (10) on thermostat housing (14). Discard lockwasher (12).
10. Remove nut (15), washer (16), cable (2), and clamp (18) from stud (17).

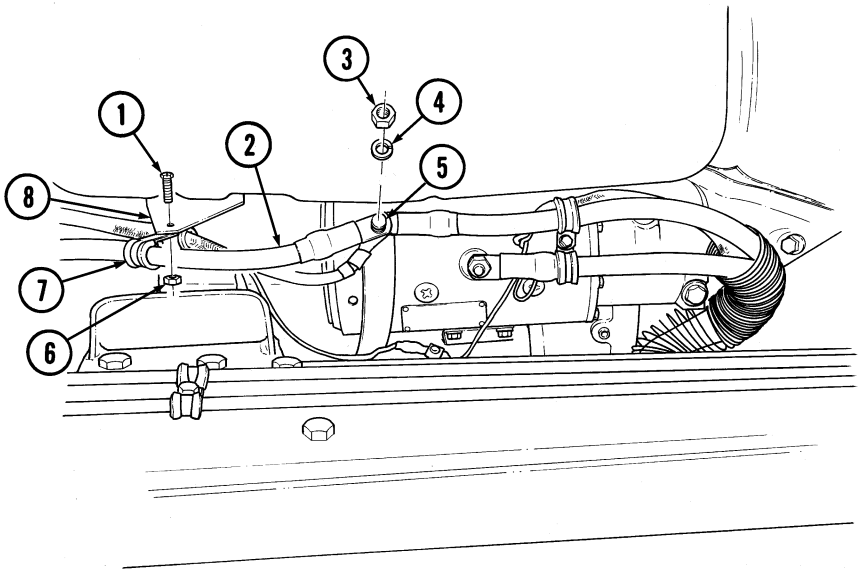

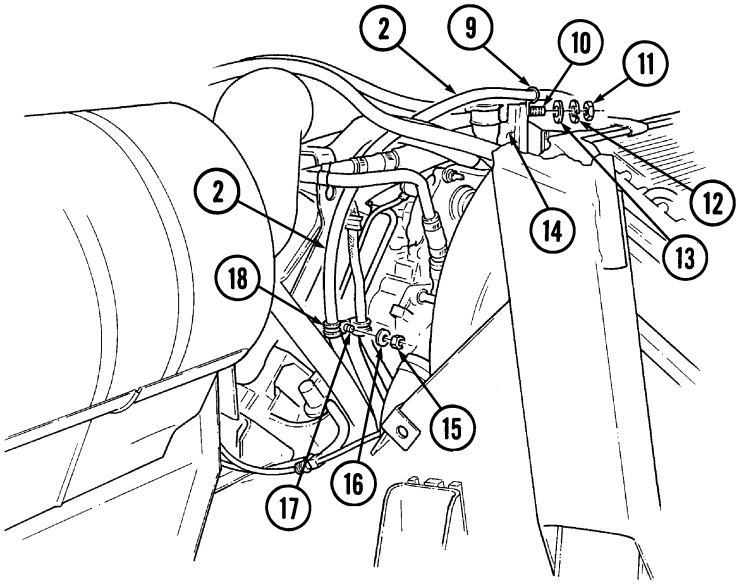

4-8.2. 400-AMPERE DUAL VOLTAGE ALTERNATOR CABLE REPLACEMENT (Cont'd)

11. Remove screw (23), lockwasher (22), washer (21), ground strap (24), lead (20), and cable (25) from alternator (19). Discard lockwasher (22).
12. Remove screw (26), lockwasher (27), washer (28), and cables (25) and (29) from alternator (19). Discard lockwasher (27).
13. Slide back rubber boot (35) and remove screw (31), lockwasher (32), washer (33), and cables (34) and (36) from alternator (19). Discard lockwasher (32).
14. Slide back rubber boot (40) and remove screw (30), lockwasher (39), washer (38), and cables (37) and (36) from alternator (19). Discard lockwasher (39).

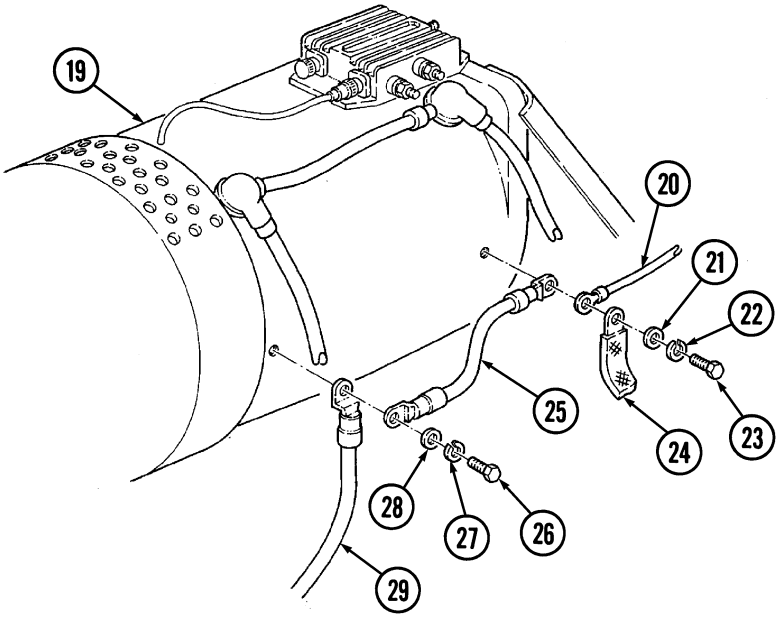

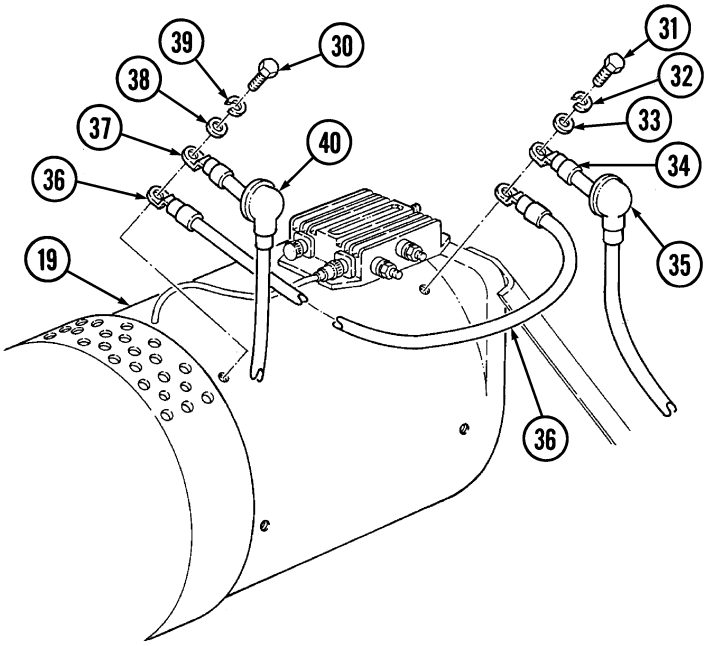

4-8.2. 400-AMPERE DUAL VOLTAGE ALTERNATOR CABLE REPLACEMENT (Cont'd)

b. Installation

1. Install cables (2) and (3) on rear positive terminal (14) of alternator (1) with washer (4), lockwasher (5), and screw (6), and slide rubber boot (7) over cables (2) and (4).
2. Install cables (2) and (9) on front positive terminal (8) of alternator (1) with washer (10), lockwasher (12), and screw (11), and slide rubber boot (13) over cables (2) and (9).
3. Install cable (21), lead (16), and ground strap (17) on front negative terminal (15) of alternator (1) with washer (18), lockwasher (20), and screw (19).
4. Install cables (25) and (21) on rear negative terminal (26) of alternator (1) with washer (24), lockwasher (23), and screw (22).

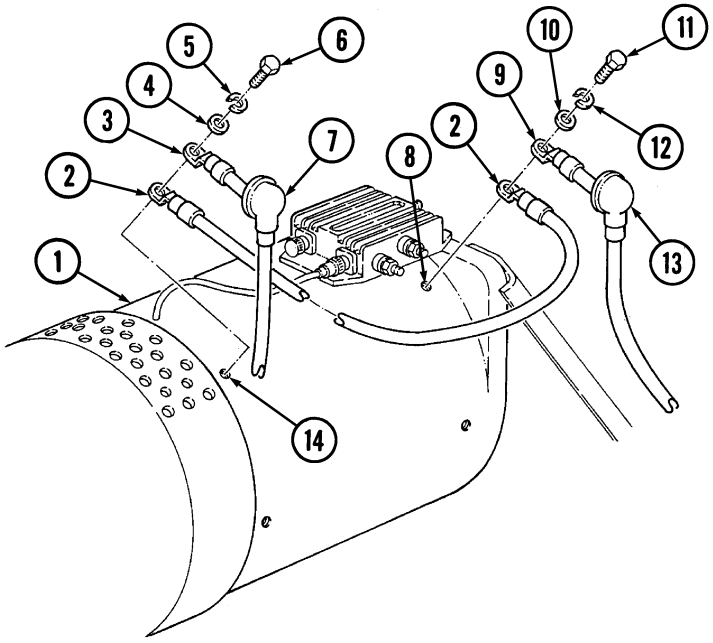

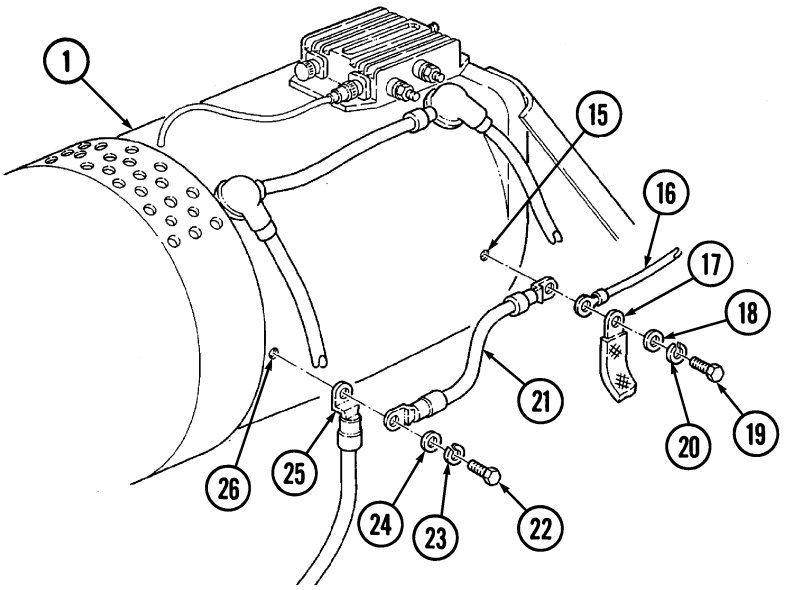

4-8.2. 400-AMPERE DUAL VOLTAGE ALTERNATOR CABLE REPLACEMENT (Cont'd)

5. Install cable (9) and clamp (36) on stud (35) with washer (34) and nut (33).
6. Install cable (9) and clamp (27) on stud (28) of thermostat housing (32) with washer (29), lockwasher (31), and nut (30).
7. Install cable (9) on positive terminal (41) of starter (44) with lockwasher (39) and nut (40).
8. Install cable (9) and clamp (37) on oil pan bracket (38) with screw (43) and nut (42).

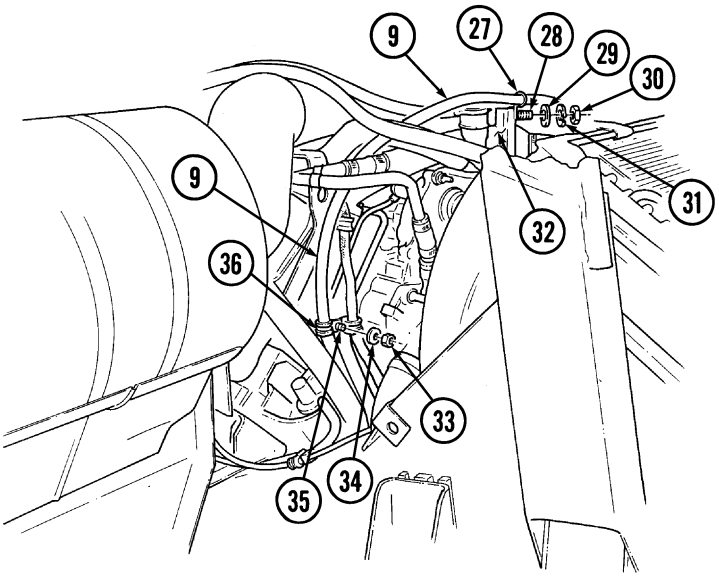

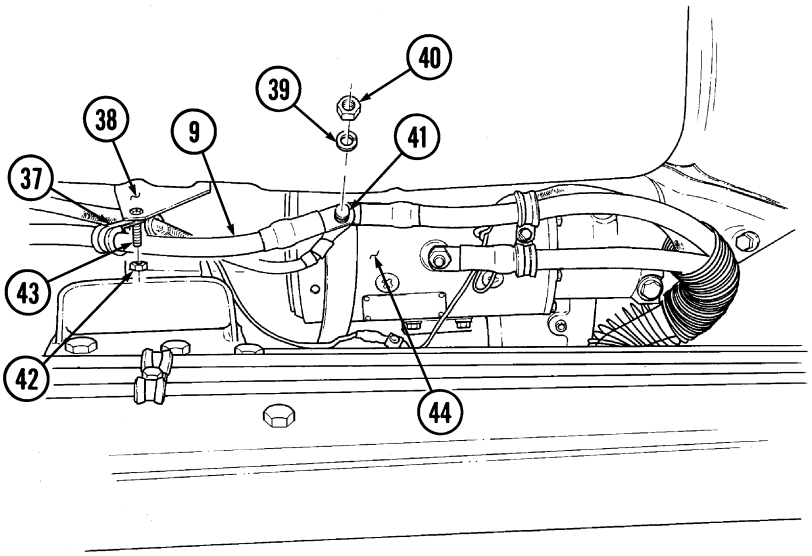

4-8.2. 400-AMPERE DUAL VOLTAGE ALTERNATOR CABLE REPLACEMENT (Cont'd)

9. Install grommet (12) on battery box side panel (5) and route cable (8) through grommet (12) and battery box side panel (5).
10. Install cable (8) on stud (7) of buss bar (6) with washer (9), lockwasher (10), and nut (11).
11. Install cable (4) on stud (13) of battery box side panel (5) with washer (3), lockwasher (2), and nut (1).
12. Install cables (4) and (8) on bracket (22) with clamp (21) and screw (20).
13. Install cables (4) and (8) on bracket (17) with clamp (16), screw (15), washer (18), and locknut (19).
14. Install three tiedown straps (14) on cables (4) and (8).

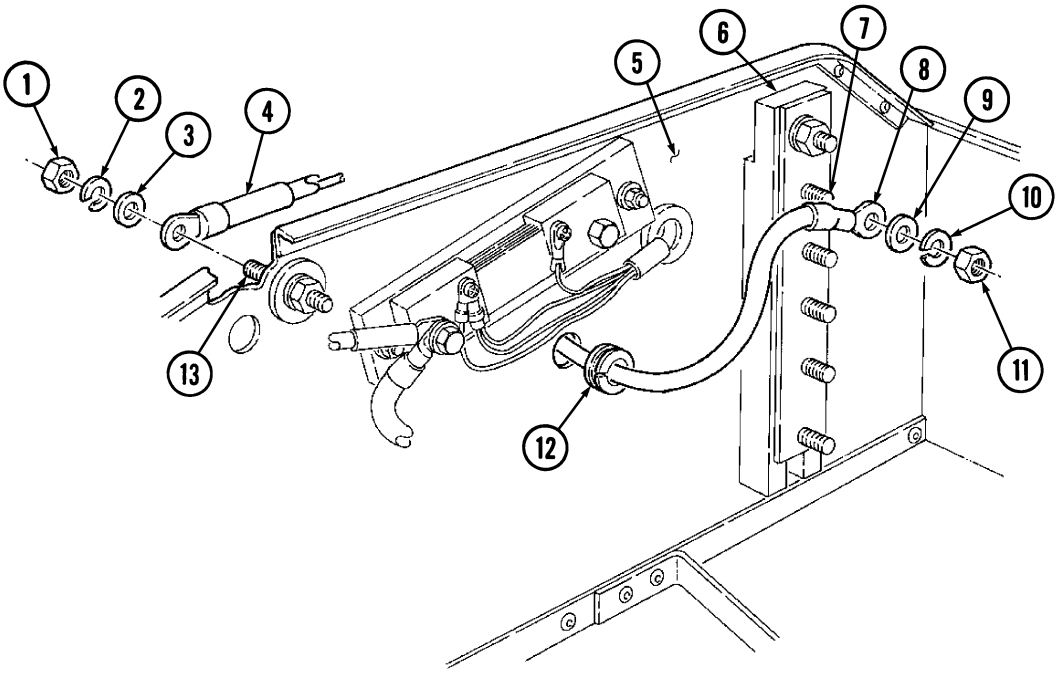

4-8.2. 400-AMPERE DUAL VOLTAGE ALTERNATOR CABLE REPLACEMENT (Cont'd)

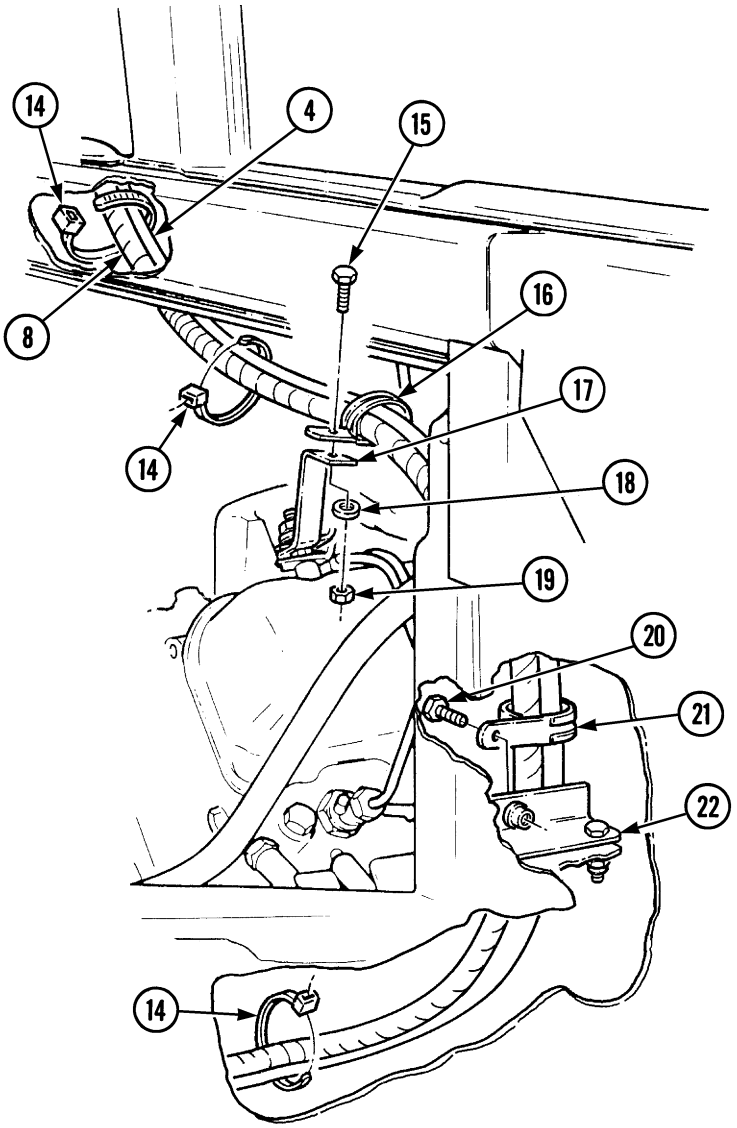

FOLLOW-ON TASKS:
- Install engine access cover (para. 10-22).
- Connect battery ground cables (para. 4-68).
- Lower and secure hood (TM 9-2320-387-10).

4-8.3. 400-AMPERE DUAL VOLTAGE ALTERNATOR REPLACEMENT

This task covers:

a. Removal **b. Installation**

INITIAL SETUP:

Tools

General mechanic's tool kit:
automotive (Appendix B, Item 1)
Maintenance and repair shop equipment:
automotive (Appendix B, Item 2)

Materials/Parts

Lockwasher (Appendix G, Item 144)
Lockwasher (Appendix G, Item 185)
Lockwasher (Appendix G, Item 154)

Personnel Required

One mechanic
One assistant

Manual References

TM 9-2320-387-10
TM 9-2320-387-24P

Equipment Condition

- Hood raised and secured (TM 9-2320-387-10).
- Battery ground cables disconnected (para. 4-68).
- Alternator cables removed (para. 4-8.2).

General Safety Instructions

Alternator must be supported during removal and installation.

a. Removal

NOTE

Prior to removal, tag leads for installation.

1. Position 3/8-in. breaker bar or, as appropriate, a 1/2-in. ratchet wrench on belt tensioner (4), move tensioner (4) clockwise, and remove drivebelt (1) from power steering pump pulley (3) and alternator pulley (2).
2. Remove nut (5), lockwasher (6), washer (7), ground strap (8), and washer (10) from stud (9). Discard lockwasher (6).

WARNING

Alternator must be support during removal and installation. Failure to do so may cause injury to personnel or damage to equipment.

3. Remove screw (12), lockwasher (13), and washer (14) from alternator bracket (17) and alternator mounting bracket (11). Discard lockwasher (13).
4. Remove screw (15), washer (16), and bracket (17) from alternator (18).
5. Remove nut (24), lockwasher (23), washer (22), screw (19), washer (20), and alternator (18) from alternator support bracket (21) and alternator mounting bracket (11). Discard lockwasher (23).
6. Remove alternator pulley (2) (para. 4-2).

b. Installation

1. Install alternator pulley (2) (para. 4-3).
2. Position alternator (18) on alternator mounting bracket (11).
3. Install alternator (18) on alternator mounting bracket (11) and alternator support bracket (21) with washer (20), screw (19), washer (22), lockwasher (23), and nut (24). Do not tighten nut (24).
4. Install alternator bracket (17) on alternator (18) with washer (16) and screw (15). Do not tighten screw (15).
5. Install washer (14), lockwasher (13), and screw (12) on alternator mounting bracket (11) and alternator bracket (17).
6. Tighten screw (15) to 40 lb-ft (54 N·m).
7. Tighten nut (24) to 155 lb-ft (210 N·m).

4-8.3. 400-AMPERE DUAL VOLTAGE ALTERNATOR REPLACEMENT (Cont'd)

8. Install ground strap (8) on stud (9) with washers (10) and (7), lockwasher (6), and nut (5).
9. Position 3/8-in. breaker bar or, as appropriate, a 1/2-in. ratchet wrench on belt tensioner (4) and move tensioner (4) clockwise and install drivebelt (1) on power steering pump pulley (3) and alternator pulley (2).

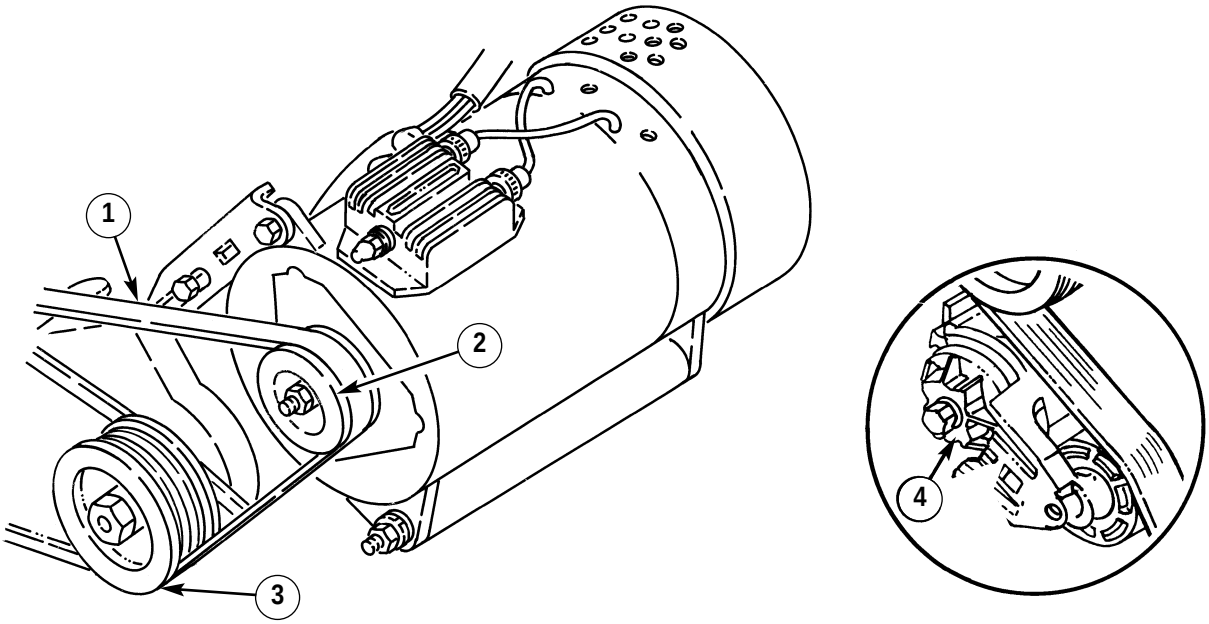

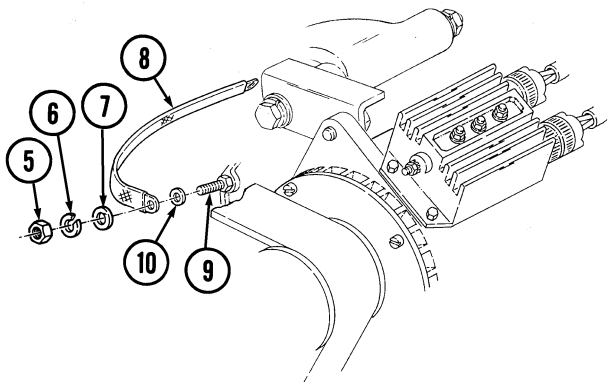

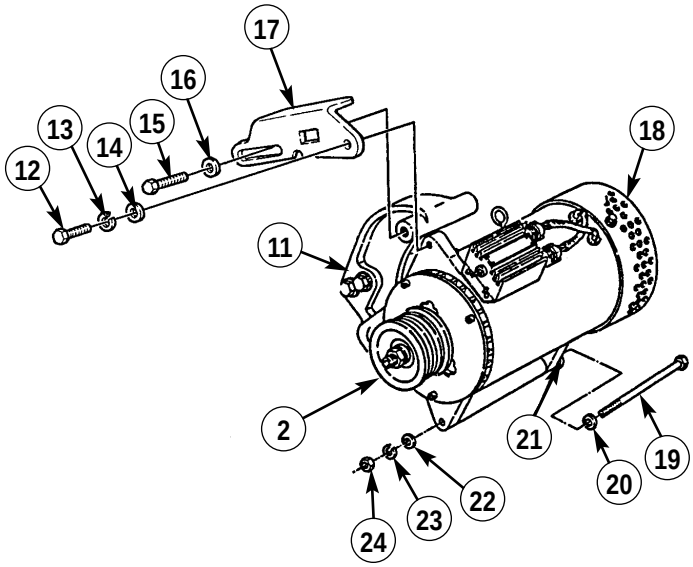

FOLLOW-ON TASKS:
- Install alternator cables (para. 4-8.2).
- Connect battery ground cables (para. 4-68).
- Lower and secure hood (TM 9-2320-387-10).

Section II. STARTER AND STARTING CONTROL SYSTEM MAINTENANCE

4-9. STARTER AND STARTING CONTROL SYSTEM MAINTENANCE TASK SUMMARY

TASK PARA.	PROCEDURES	PAGE NO.
4-10.	Rotary Switch Replacement	4-20
4-11.	Starter Replacement	4-22
4-12.	Circuit Breaker Replacement	4-26

4-10. ROTARY SWITCH REPLACEMENT

This task covers:

a. Removal

b. Installation

INITIAL SETUP:

Tools
General mechanic's tool kit:
automotive (Appendix B, Item 1)

Materials/Parts
Lockwasher (Appendix G, Item 147)
Lockwasher (Appendix G, Item 155)

Manual References
TM 9-2320-387-10
TM 9-2320-387-24P

Equipment Condition
Battery ground cables disconnected (para. 4-68).

Maintenance Level
Unit

NOTE
Prior to removal, tag leads and note position of lever for installation.

a. Removal

1. Remove screw (8), lockwasher (7), and switch lever (6) from switch shaft (9). Discard lockwasher (7).
2. Remove nut (5) and lockwasher (4) from switch (2) and instrument panel (3). Discard lockwasher (4).
3. Push switch (2) out of hole in panel (3).
4. Disconnect three electrical leads 11A (1), 14A (10), and 29A (11) from switch (2).

b. Installation

1. Connect three electrical leads 11A (1), 14A (10), and 29A (11) to switch (2).
2. Install switch (2) into hole in instrument panel (3).
3. Install lockwasher (4) and nut (5) on switch (2).
4. Place switch lever (6) on switch shaft (9) to ENGINE STOP position.
5. Secure lever (6) on switch shaft (9) with lockwasher (7) and screw (8).

4-10. ROTARY SWITCH REPLACEMENT (Cont'd)

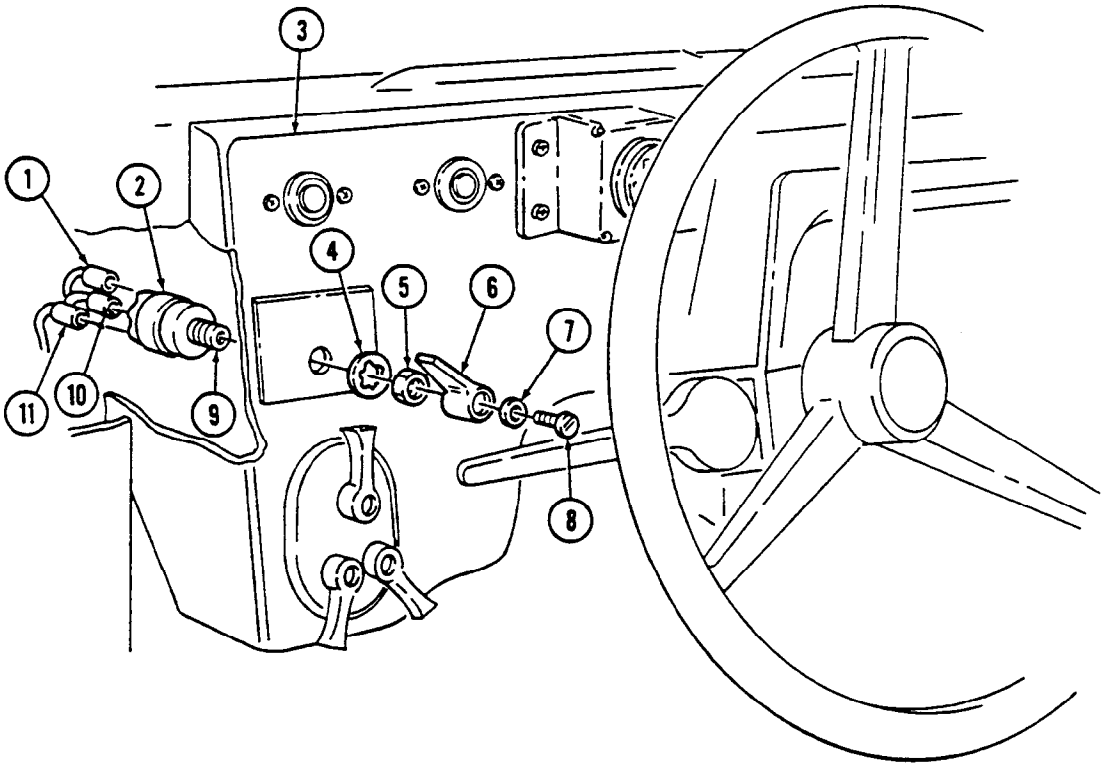

FOLLOW-ON TASKS:
- Connect battery ground cables (para. 4-68).
- Check rotary switch operation (TM 9-2320-387-10).

4-11. STARTER REPLACEMENT

This task covers:

a. Removal **b. Installation**

INITIAL SETUP:

Tools

General mechanic's tool kit:
automotive (Appendix B, Item 1)
Maintenance and repair shop equipment:
automotive (Appendix B, Item 2)

Special Tools

Crowfoot, 9/16-in. (Appendix B, Item 139)
Torque adapter, 3/4-in. (Appendix B, Item 134)
Socket adapter, 3/8- to 1/2-in. drive
(Appendix B, Item 135)

Materials/Parts

Lockwasher (Appendix G, Item 144)
Lockwasher (Appendix G, Item 148)
Assembled locknut (Appendix G, Item 134)
Adhesive sealant (Appendix C, Item 12)
Sealing compound (Appendix C, Item 62)

Personnel Required

One mechanic
One assistant

Manual References

TM 9-2320-387-10
TM 9-2320-387-24P

Equipment Condition

- Battery ground cables disconnected (para. 4-68).
- Sealed upper converter housing cover removed (para. 5-12).

General Safety Instructions

Starter must be supported during removal and installation.

Maintenance Level

Unit

WARNING

Starter must be supported during removal and installation. Failure to support starter may cause injury to personnel or damage to equipment.

NOTE

- Illustration shown is a cutaway of the right side of vehicle.
- Prior to removal, tag leads for installation.

a. Removal

1. Remove assembled locknut (30), capscrew (28), and clamp (29) from oil pan bracket (27). Discard assembled locknut (30).
2. Remove adhesive sealant from positive terminal (8) on starter (1).

NOTE

Perform steps 3 and 4 for M1113 models only. Perform steps 5 and 6 for M1114 models only.

3. Remove nut (14), lockwasher (13), lead 6V (12), lead 81B (15), and lead 6A (20) from positive terminal (8). Discard lockwasher (13).
4. Remove nut (16), lockwasher (17), lead 7V (18), lead 3D (19), and negative cable 7A (21) from starter negative terminal (22). Discard lockwasher (17).
5. Remove nut (16), lockwasher (17), lead 3D (19), and negative cable 7A (21) from starter negative terminal (22). Discard lockwasher (17).
6. Remove nut (14), lockwasher (13), lead 81B (15), and lead 6A (20) from positive terminal (8). Discard lockwasher (13).
7. Remove screw (11), clip (10), lead 74B (9), and lead 74A (7) from solenoid (2).

4-11. STARTER REPLACEMENT (Cont'd)

8. Remove screw (25), clamp (23), and lead 6A (20) from starter (1).
9. Loosen nut (5) on stud (6) connecting starter (1) to bracket (4).
10. While supporting starter (1) from under vehicle, remove two capscrews (24) from starter (1) and engine (3).

NOTE

Note size of shim for installation.

11. Remove starter (1) and shim (26) from engine (3).

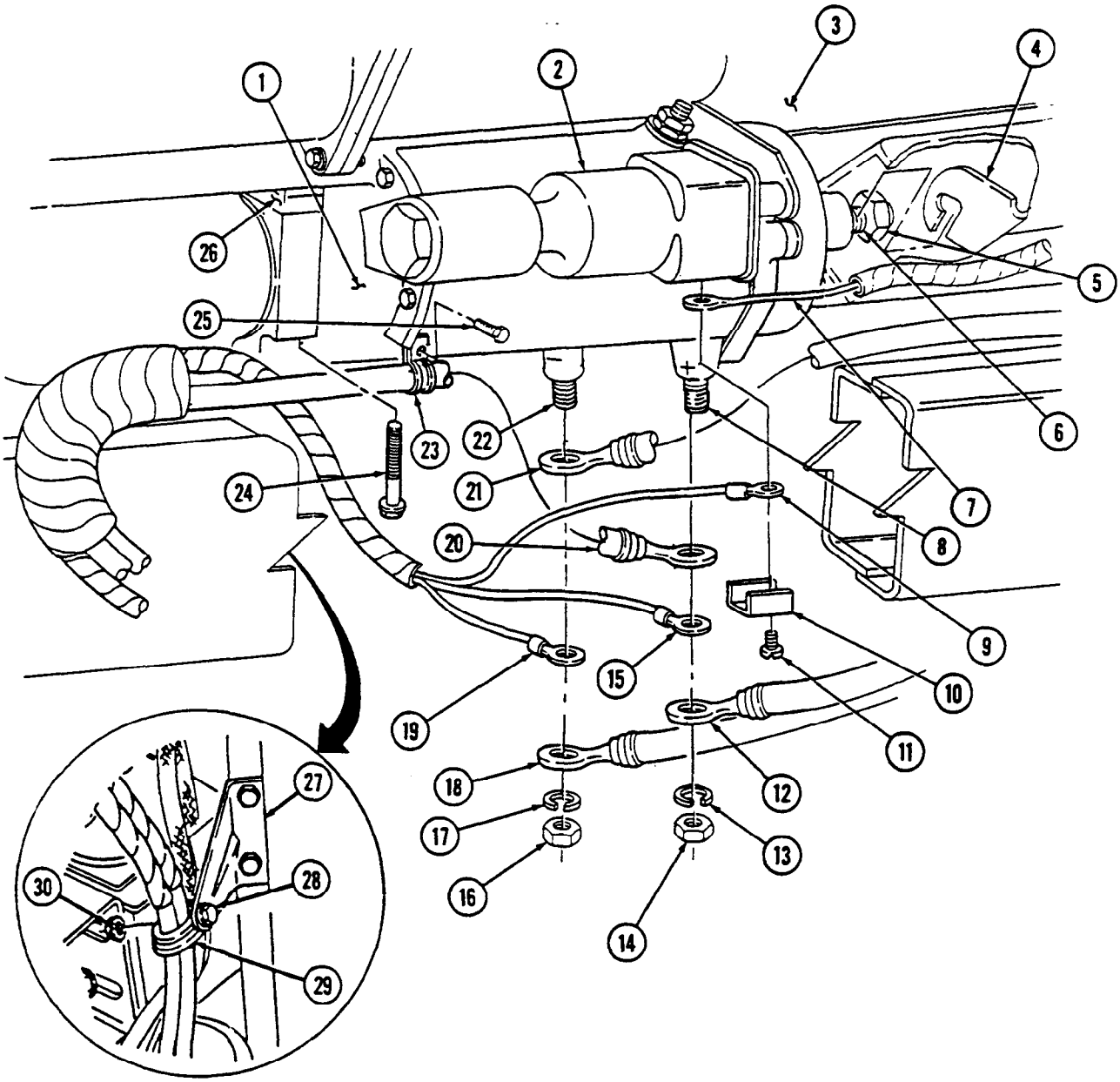

4-11. STARTER REPLACEMENT (Cont'd)

b. Installation

1. Install a .08-in. (2-mm) shim (26) on starter (1).
2. Position shim (26) and starter (1) on engine (3).
3. Slide front stud (6) on starter (1) in bracket (4).

NOTE

Some capscrews have sealing compound pre-applied. Additional sealing compound is not required.

4. Apply sealing compound to two capscrews (24). Install capscrews (24) on starter (1) and engine (3). Tighten capscrews (24) to 30-40 lb-ft (41-54 N·m).
5. Install starter (1) on bracket (4) with nut (5). Using crowfoot, tighten nut (5) to 15-19 lb-ft (20-26 N·m).
6. Install clamp (23) and positive cable 6A (20) on starter (1) with screw (25).
7. Connect lead 74B (7) and lead 74A (9) on solenoid (2) with clip (10) and screw (11). Tighten screw (11) to 20 lb-in. (2 N·m).

NOTE

Perform steps 8 and 9 for M1113 models only. Perform steps 10 and 11 for M1114 models only.

8. Connect lead 6A (20), lead 81B (15), and lead 6V (12) on positive terminal (8) with lockwasher (13) and nut (14).
9. Connect negative cable 7A (21), lead 3D (19), and lead 7V (18) on negative terminal (22) with lockwasher (17) and nut (16). Using torque adapter, tighten nut (16) to 15-20 lb-ft (20-27 N·m).
10. Connect lead 6A (20) and lead 81B (15) on positive terminal (8) with lockwasher (13) and nut (14).
11. Connect lead 7A (21) and lead 3D (19) on negative terminal (22) with lockwasher (17) and nut (16). Using torque adapter, tighten nut (16) to 15-20 ft-lb (20-27 N·m).
12. Seal positive terminal (8) with adhesive sealant. Apply sealant at least 1/8 in. (3 mm) thick, covering all exposed metal attached to positive terminal (8).
13. Install clamp (29) on oil pan bracket (27) with capscrew (28) and assembled locknut (30).

4-11. STARTER REPLACEMENT (Cont'd)

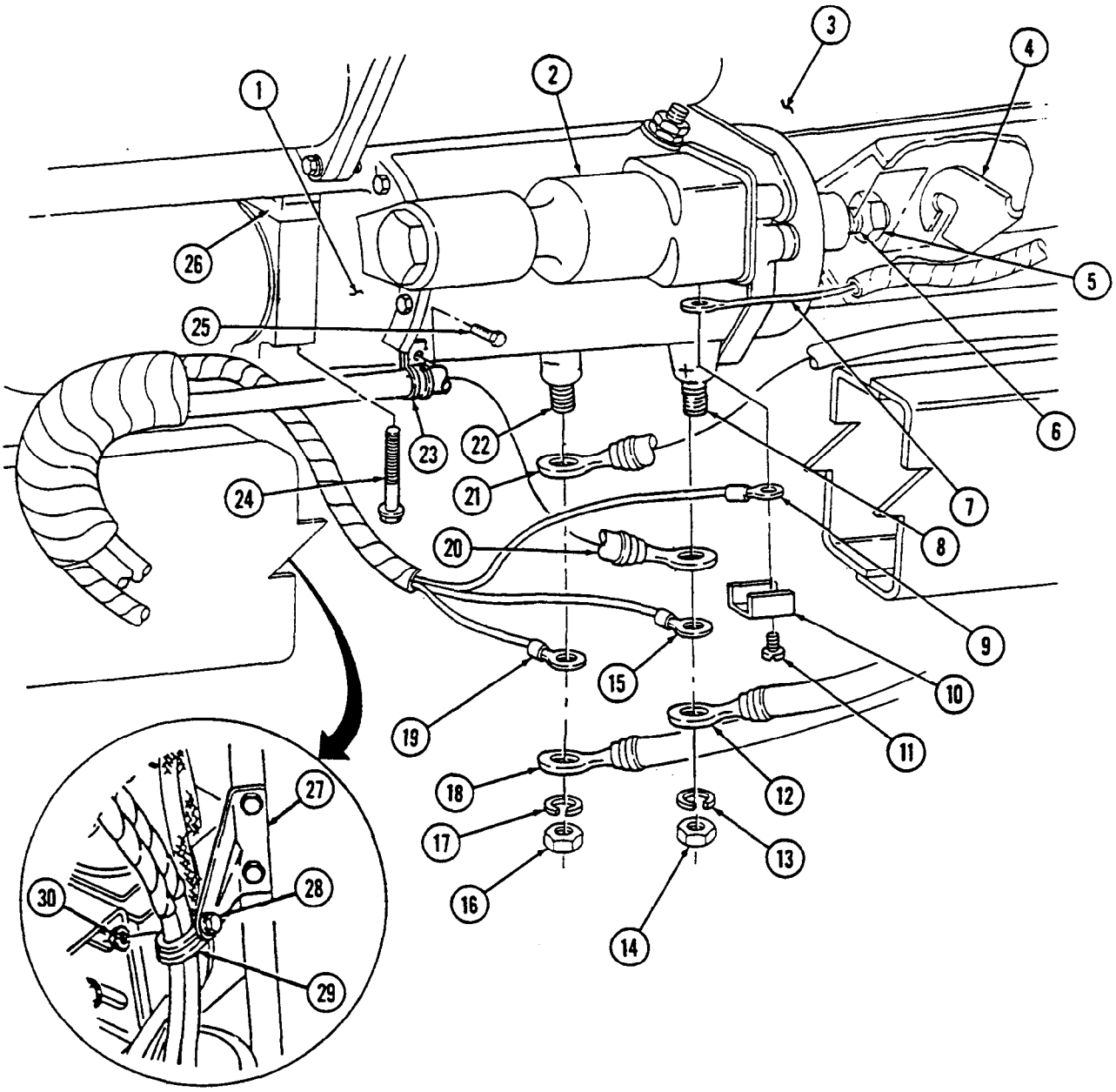

FOLLOW-ON TASKS:
- Install sealed upper converter housing cover (para. 5-12).
- Connect battery ground cables (para. 4-68).
- Start engine (TM 9-2320-387-10) and check for smooth starter engagement.

4-12. CIRCUIT BREAKER REPLACEMENT

This task covers:

a. Removal **b. Installation**

INITIAL SETUP:

Tools

General mechanic's tool kit:
automotive (Appendix B, Item 1)
Maintenance and repair shop equipment:
automotive (Appendix B, Item 2)

Materials/Parts

Two lockwashers (Appendix G, Item 147)

Manual References

TM 9-2320-387-10
TM 9-2320-387-24P

Equipment Condition

Battery ground cables disconnected (para. 4-68).

Maintenance Level

Unit

NOTE

- Replacement procedures for all circuit breakers are basically the same. This procedure covers the instrument gauge circuit breaker.
- Prior to removal, tag leads for installation.

a. Removal

1. Loosen nut (1) and lower steering column (2).
2. Disconnect leads 29B (8) and 29D (9) from circuit breaker (6).
3. Remove two nuts (4), lockwashers (5), screws (7), and circuit breaker (6) from column bracket (3). Discard lockwashers (5).

b. Installation

1. Install circuit breaker (6) on column bracket (3) with two screws (7), lockwashers (5), and nuts (4).
2. Connect leads 29B (8) and 29D (9) to circuit breaker (6).
3. Raise steering column (2) and tighten nut (1) to 31 lb-ft (42 N·m).

4-12. CIRCUIT BREAKER REPLACEMENT (Cont'd)

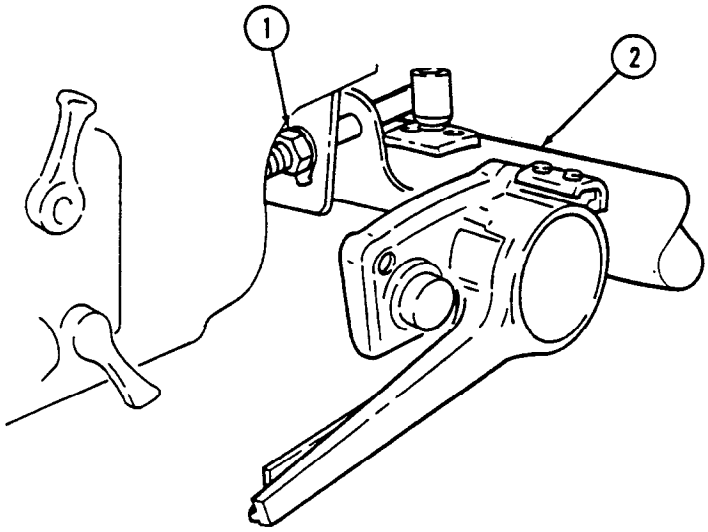

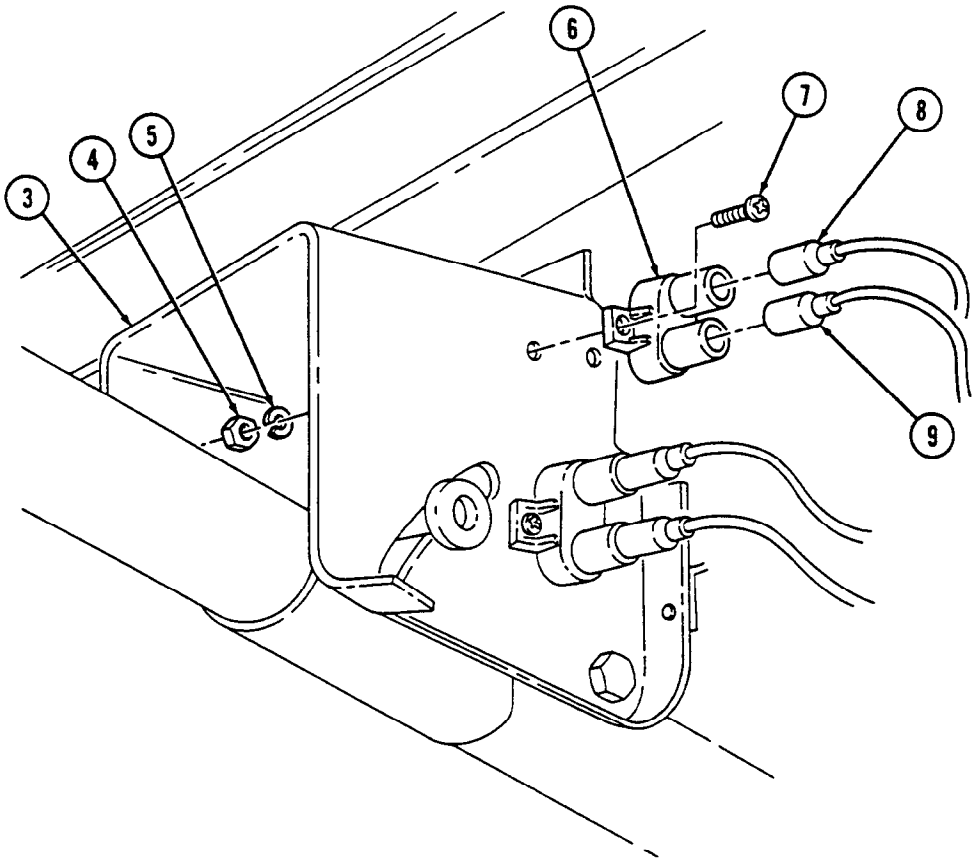

FOLLOW-ON TASKS: • Connect battery ground cables (para. 4-68).
• Check operation of circuit breaker (TM 9-2320-387-10).

Section III. INSTRUMENTS, SENDING UNITS, SWITCHES, AND HORN MAINTENANCE

4-13. INSTRUMENTS, SENDING UNITS, SWITCHES, AND HORN MAINTENANCE TASK SUMMARY

TASK PARA.	PROCEDURES	PAGE NO.
4-14.	Instrument Cluster Replacement	4-30
4-15.	Instrument Panel Replacement	4-32
4-16.	Electrical Gauge Replacement	4-34
4-17.	Speedometer/Odometer Replacement	4-36
4-18.	Speedometer Cable Replacement	4-38
4-19.	Instrument Cluster Light Replacement	4-40
4-20.	Wait-to-Start Lamp Replacement	4-42
4-21.	Brake Warning Lamp Replacement	4-44
4-22.	High-Beam Lamp Replacement	4-45
4-23.	Parking Brake Switch Replacement	4-46
4-24.	Horn Switch Replacement	4-47
4-25.	Horn Control Brush Replacement	4-48
4-26.	Horn Replacement	4-49
4-27.	Horn Mounting Bracket Replacement	4-50
4-28.	Engine Temperature Sending Unit Replacement	4-51
4-29.	Oil Pressure Sending Unit Maintenance	4-52
4-30.	Fuel Pressure Transducer Replacement	4-54
4-31.	Cold-Advance Switch Replacement	4-55
4-32.	Fuel Level Sending Unit Replacement	4-56
4-33.	Glow Plug Controller Replacement	4-58
4-34.	Fan Temperature Switch Replacement	4-60
4-35.	Time-Delay Module Replacement	4-61
4-36.	Backup Light Switch Replacement	4-62
4-37.	Engine RPM Sensor Replacement	4-64

4-14. INSTRUMENT CLUSTER REPLACEMENT

This task covers:

a. Removal **b. Installation**

INITIAL SETUP:

Tools
General mechanic's tool kit:
automotive (Appendix B, Item 1)

Materials/Parts
Five lockwashers (Appendix G, Item 137)
Antiseize compound (Appendix C, Item 16)

Manual References
TM 9-2320-387-10
TM 9-2320-387-24P

Equipment Condition
Battery ground cables disconnected (para. 4-68).

Maintenance Level
Unit

NOTE

Prior to removal, tag leads for installation.

a. Removal

1. Remove four screws (7) and washers (6) from instrument cluster (8) and instrument panel (3). Pull instrument cluster (8) away from instrument panel (3) to allow access to speedometer cable (4).
2. Loosen driveshaft nut (5) and disconnect speedometer cable (4) from speedometer (1).
3. Disconnect harness lead 27J (26), 28A (9), 40B (13), 27H (14), 36A (15), 57L (19), 17B (20), 27G (21), 33A (22), 40C (17), and 567A (18) from instrument cluster (8).
4. Remove five nuts (12), lockwashers (11), and harness ground leads 58H (10), 58G (25), 58E (23), 58F (24), and 57G (16) from instrument cluster (8) and remove instrument cluster (8). Discard lockwashers (11).

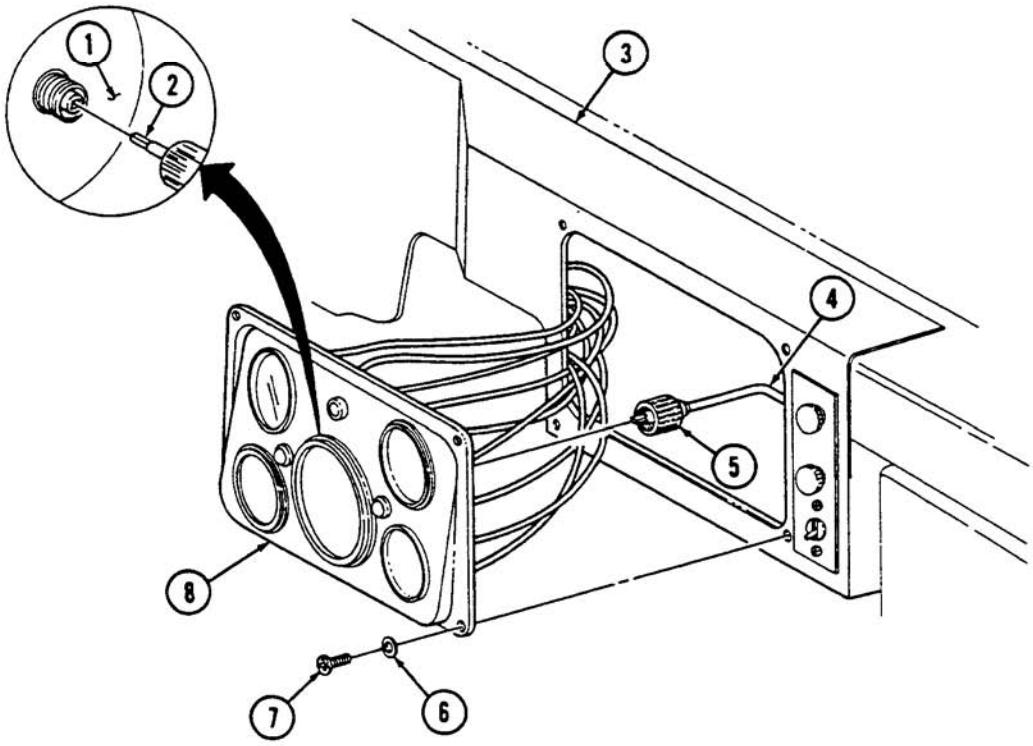

4-14. INSTRUMENT CLUSTER REPLACEMENT (Cont'd)

b. Installation

1. Apply antiseize compound to harness ground leads 58H (10), 58G (25), 58E (23), 58F (24), and 57G (16) and install on instrument cluster (8) with five lockwashers (11) and nuts (12).
2. Connect harness leads 27J (26), 28A (9), 40B (13), 27H (14), 36A (15), 57L (19), 17B (20), 27G (21), 33A (22), 40C (17), and 567A (18) to instrument cluster (8).
3. Connect speedometer cable (4) to speedometer (1), ensuring core (2) engages with square hole in speedometer (1), and secure with driveshaft nut (5).
4. Install instrument cluster (8) in panel (3) with four washers (6) and screws (7).

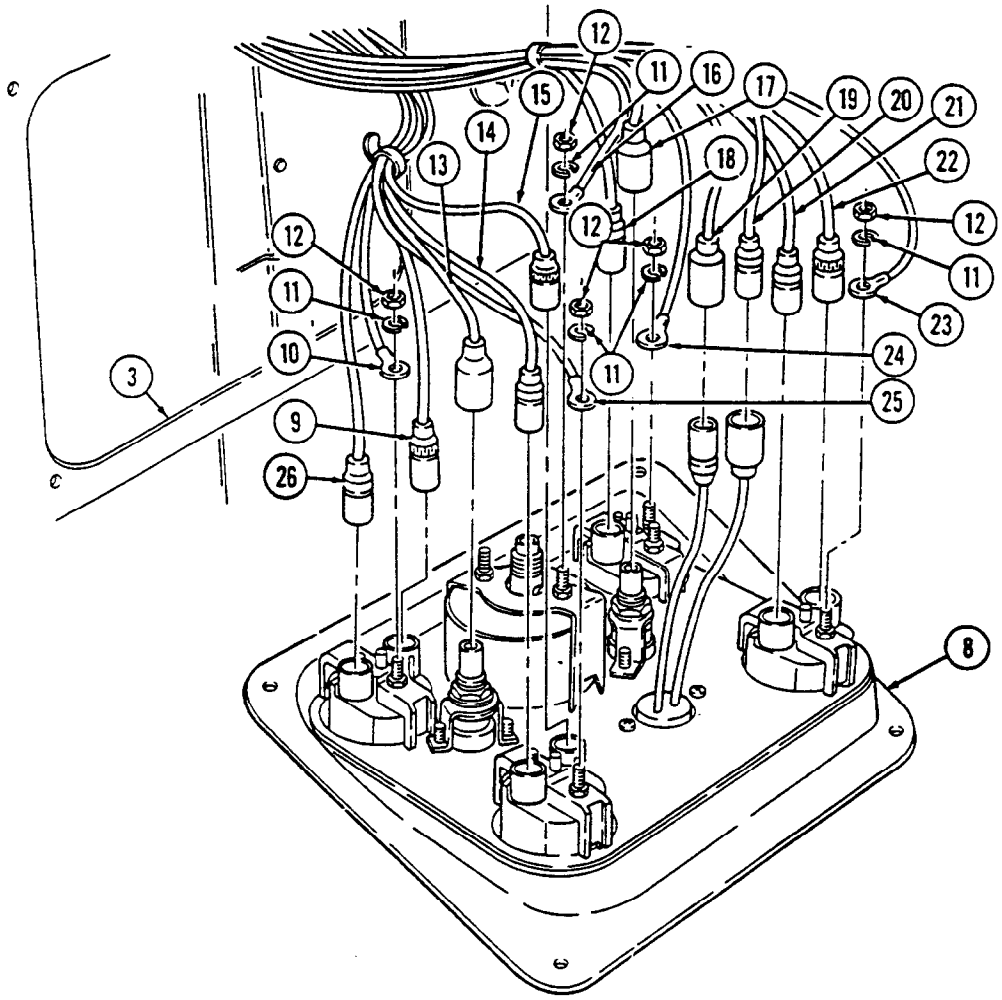

FOLLOW-ON TASKS: • Connect battery ground cables (para. 4-68).
• Check operation of instrument cluster components (TM 9-2320-387-10).

4-15. INSTRUMENT PANEL REPLACEMENT

This task covers:

a. Removal

b. Installation

INITIAL SETUP:

Tools
General mechanic's tool kit:
automotive (Appendix B, Item 1)
Maintenance and repair shop equipment:
automotive (Appendix B, Item 2)

Manual References
TM 9-2320-387-10
TM 9-2320-387-24P

Equipment Condition
- Instrument cluster removed (para. 4-14).
- Heater control cables removed (para. 10-79).

Maintenance Level
Unit

NOTE

Prior to removal, tag leads for installation.

a. Removal

1. Loosen nut (9) and lower steering column (3).
2. Remove cannon plug (11) from main light switch (10).
3. Remove two capscrews (12), washers (13), nuts (14), and washers (13) from instrument panel (2) and body (1).
4. Remove nut (16) and screw (17) from hand throttle bracket (15) and instrument panel (2).
5. Remove nut (4), washer (5), capscrew (7), washer (5), and hand throttle bracket (15) from steering column bracket (8) and instrument panel (2).
6. Remove screw (6) from instrument panel (2) and body (1).
7. Pull instrument panel (2) away from body (1).
8. Disconnect harness leads 11A (28), 14A (29), and 27A (27) from rotary switch (26).
9. Disconnect harness leads 27F (32) and 571A (31) at wait-to-start indicator light (24).
10. Disconnect harness leads 27L (30) and 67D (33) at brake warning indicator light (22).
11. Disconnect harness lead 400 D (18) from resistor (21).
12. Disconnect harness lead 27E (19) from blower switch (20) and remove instrument panel (2).
13. Disconnect hose (25) from air restriction gauge (23).

b. Installation

1. Connect hose (25) to air restriction gauge (23).
2. Connect harness lead 27E (19) to blower switch (20).
3. Connect harness lead 400D (18) to resistor (21).
4. Connect harness leads 27L (30) and 67D (33) to brake warning indicator light (22).
5. Connect harness leads 27F (32) and 571A (31) to wait-to-start indicator light (24).
6. Connect harness leads 11A (28), 14A (29), and 27A (27) to rotary switch (26).
7. Install instrument panel (2) on body (1) with screw (6).
8. Install instrument panel (2) and hand throttle bracket (15) on steering column bracket (8) with washer (5), capscrew (7), washer (5), and nut (4).
9. Install hand throttle bracket (15) on instrument panel (2) with screw (17) and nut (16).
10. Install two washers (13), capscrews (12), washers (13), and nuts (14) on instrument panel (2).
11. Install cannon plug (11) on main light switch (10).
12. Raise steering column (3) and tighten nut (9) to 31 lb-ft (42 N•m).

4-15. INSTRUMENT PANEL REPLACEMENT (Cont'd)

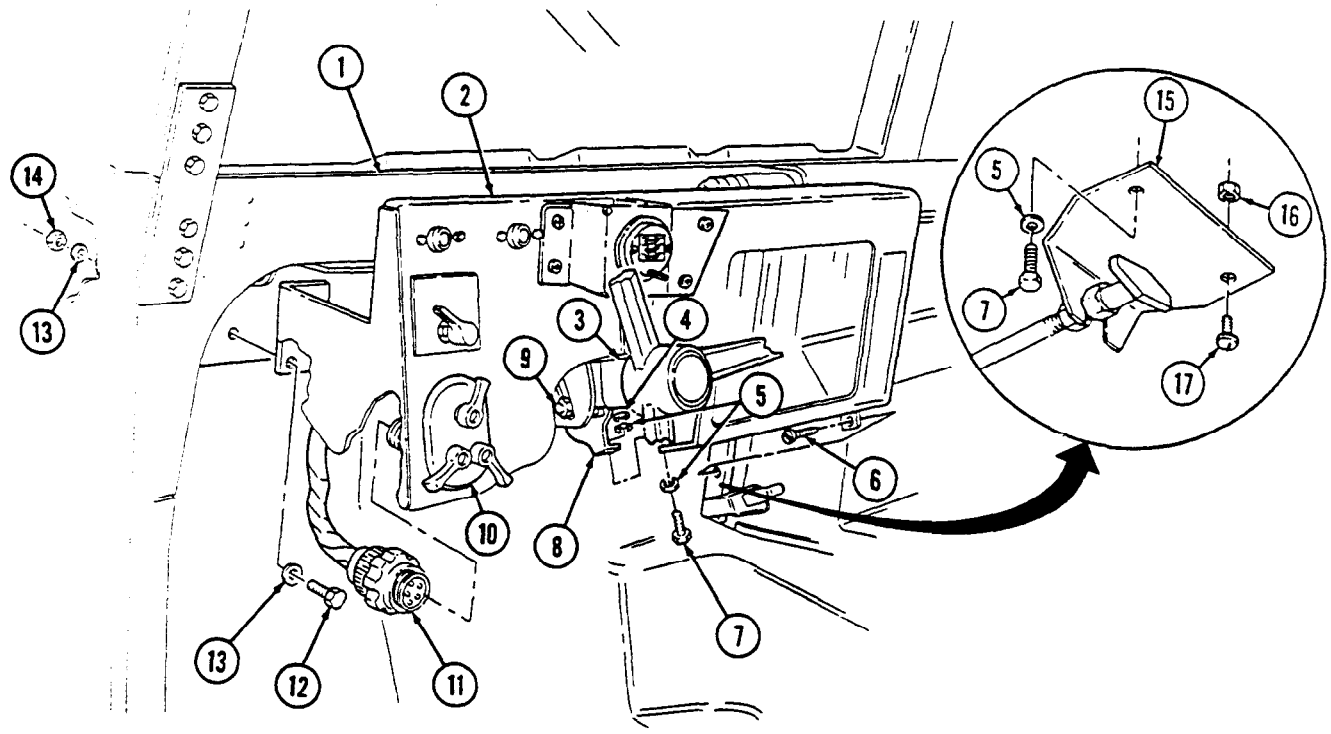

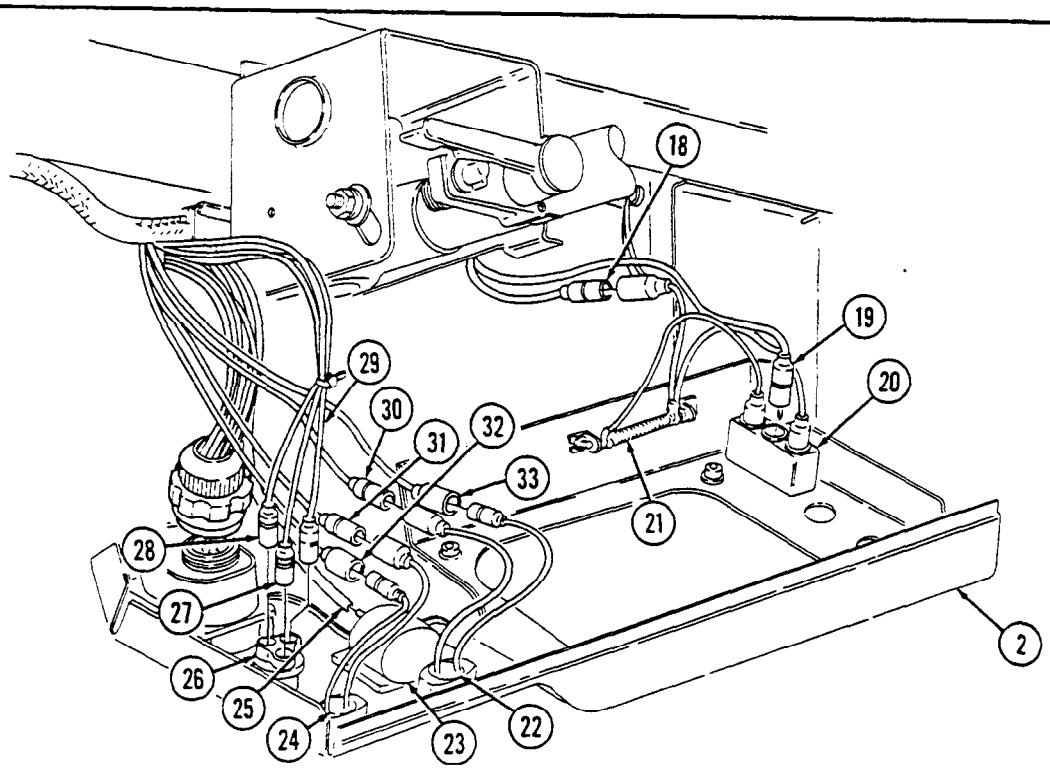

FOLLOW-ON TASKS:
- Install heater cables (para. 10-79).
- Install instrument cluster (para. 4-14).
- Check operation of instrument panel components (TM 9-2320-387-10).

4-16. ELECTRICAL GAUGE REPLACEMENT

This task covers:

a. Removal **b. Installation**

INITIAL SETUP:

Tools

General mechanic's tool kit:
automotive (Appendix B, Item 1)
Maintenance and repair shop equipment:
automotive (Appendix B, Item 2)

Materials/Parts

Two lockwashers (Appendix G, Item 137)

Manual References

TM 9-2320-387-10
TM 9-2320-387-24P

Equipment Condition

Battery ground cables disconnected (para. 4-68).

Maintenance Level

Unit

NOTE

- Replacement procedures for all electrical gauges are basically the same. This procedure covers the temperature gauge.
- Prior to removal, tag all leads for installation.

a. Removal

1. Remove four screws (9) and washers (8) from instrument cluster (1) and instrument panel (6).
2. Pull instrument cluster (1) away from panel (6).
3. Disconnect leads (4) and (5) from gauge (10).
4. Remove two nuts (3), lockwashers (7), retaining bracket (2), and gauge (10) from instrument cluster (1). Discard lockwashers (7).

b. Installation

1. Install gauge (10) and retaining bracket (2) on instrument cluster (1) with two lockwashers (7) and nuts (3). Tighten nuts (3) to 8 lb-in. (1 N·m).
2. Connect leads (4) and (5) to gauge (10).
3. Install instrument cluster (1) on panel (6) with four washers (8) and screws (9).

4-16. ELECTRICAL GAUGE REPLACEMENT (Cont'd)

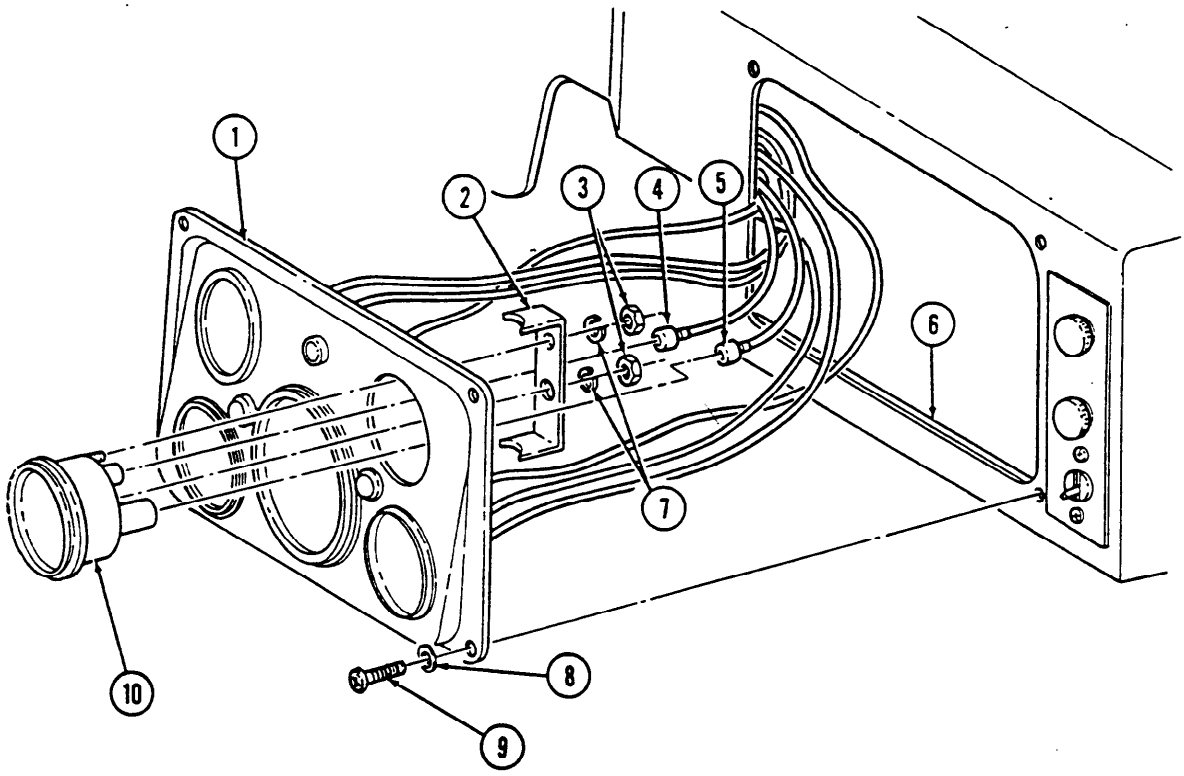

FOLLOW-ON TASKS:
- Connect battery ground cables (para. 4-68).
- Start engine and check operation of electrical gauge (TM 9-2320-387-10).

4-17. SPEEDOMETER/ODOMETER REPLACEMENT

This task covers:

a. Removal **b. Installation**

INITIAL SETUP:

Tools
General mechanic's tool kit:
automotive (Appendix B, Item 1)
Maintenance and repair shop equipment:
automotive (Appendix B, Item 2)

Manual References
TM 9-2320-387-10
TM 9-2320-387-24P

Maintenance Level
Unit

a. Removal

1. Remove four screws (10) and washers (9) from instrument cluster (4) and instrument panel (8).
2. Pull instrument cluster (4) away from panel (8).
3. Loosen driveshaft nut (2) on speedometer cable (7) and pull cable end out of speedometer (3).
4. Remove two nuts (6) from speedometer retaining bracket (5) and remove speedometer (3) and bracket (5) from instrument cluster (4).

b. Installation

1. Install speedometer (3) and retaining bracket (5) on instrument cluster (4) with two nuts (6). Tighten nuts (6) to 8 lb-in. (1 N•m).
2. Install speedometer cable (7) into back of speedometer (3), ensuring core (1) engages in square hole in speedometer (3), and tighten driveshaft nut (2).
3. Install instrument cluster (4) on panel (8) with four washers (9) and screws (10).

4-17. SPEEDOMETER/ODOMETER REPLACEMENT (Cont'd)

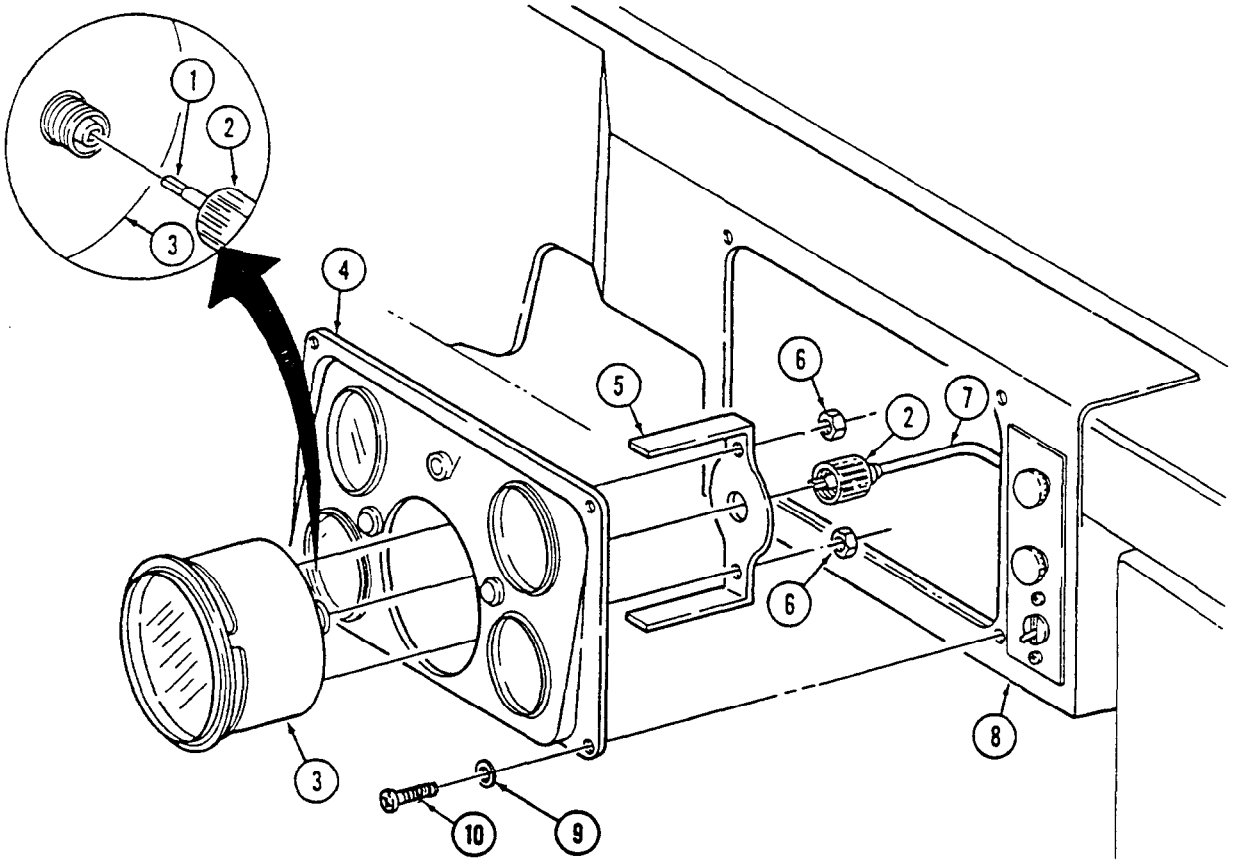

FOLLOW-ON TASK: Check operation of speedometer (TM 9-2320-387-10).

4-18. SPEEDOMETER CABLE REPLACEMENT

This task covers:

a. Removal **b. Installation**

INITIAL SETUP:

Tools
General mechanic's tool kit: automotive (Appendix B, Item 1)

Materials/Parts
Nut and lockwasher assembly (Appendix G, Item 197)
Tiedown strap (Appendix G, Item 329.1)

Manual References
TM 9-2320-387-10
TM 9-2320-387-24P

Equipment Condition
- Hood raised and secured (TM 9-2320-387-10).
- Engine access cover removed (para. 10-22).

Maintenance Level
Unit

a. Removal

1. Remove four screws (12) and washers (13) from instrument cluster (11) and instrument panel (10) and pull instrument cluster (11) away to gain access to back of speedometer (3).
2. Remove driveshaft nut (2) from speedometer (3).
3. Push cable (5) and rubber grommet (4) through body (8).
4. Remove nut and lockwasher assembly (6), screw (9), and clamp (7) from body (8). Remove clamp (7) from cable (5). Discard nut and lockwasher assembly (6).
5. Remove tiedown strap (14) from speedometer cable (5) and harness (16). Discard tiedown strap (14).
6. Remove speedometer cable (5) from adapter (15).

b. Installation

1. Install speedometer cable (5) on adapter (15), ensuring core (1) engages in square hole of adapter (15).
2. Install tiedown strap (14) on speedometer cable (5) and harness (16).
3. Install cable (5) on body (8) with clamp (7), screw (9), and nut and lockwasher assembly (6).
4. Install cable (5) and grommet (4) on body (8).
5. Connect cable (5) to back of speedometer (3), ensuring core (1) engages in square hole in speedometer (3) and tighten driveshaft nut (2).
6. Install instrument cluster (11) on instrument panel (10) with four washers (13) and screws (12).

4-18. SPEEDOMETER CABLE REPLACEMENT (Cont'd)

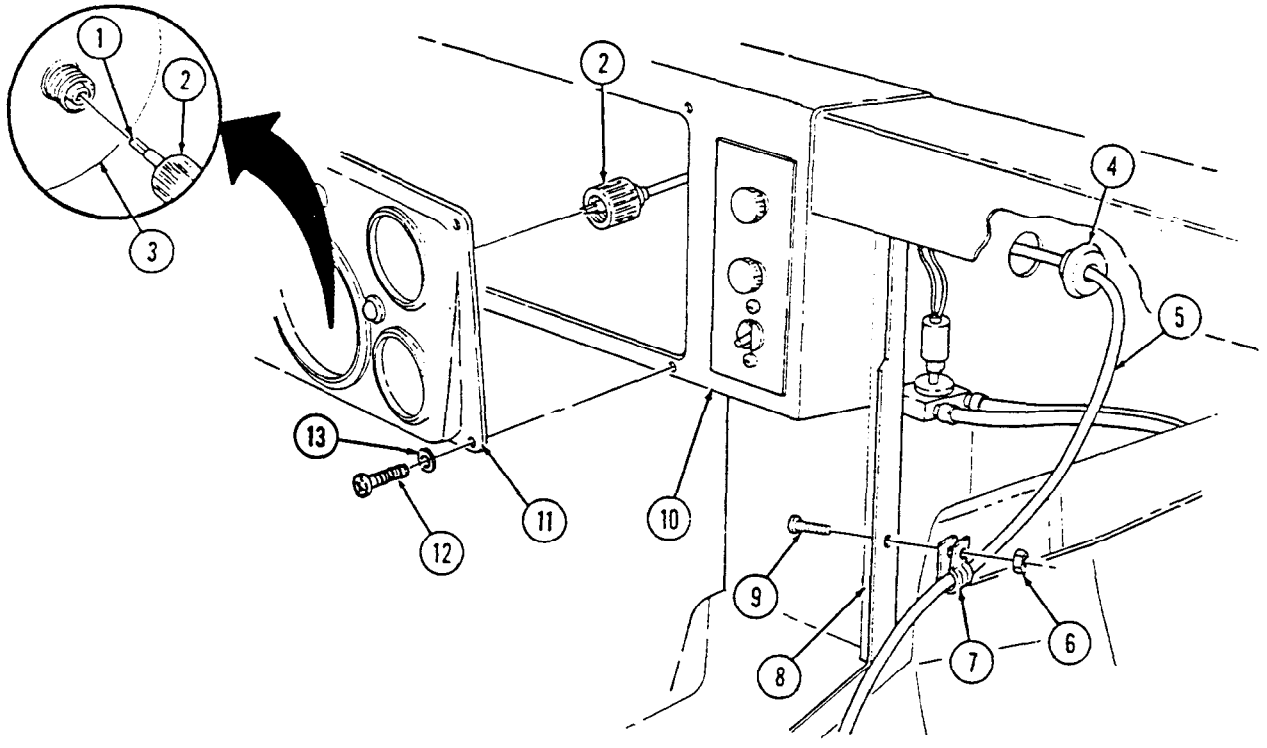

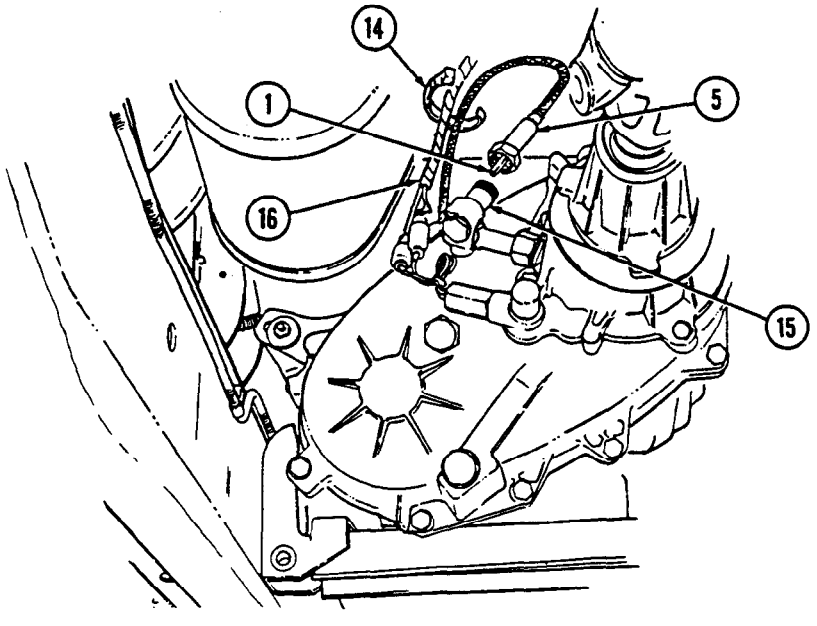

FOLLOW-ON TASKS:
- Lower and secure hood (TM 9-2320-387-10).
- Install engine access cover (para. 10-22).

4-19. INSTRUMENT CLUSTER LIGHT REPLACEMENT

This task covers:

a. Lamp Removal
b. Lamp Installation
c. Light Assembly Removal
d. Light Assembly Installation

INITIAL SETUP:

Tools
General mechanic's tool kit:
automotive (Appendix B, Item 1)

Manual References
TM 9-2320-387-24P

Equipment Condition
Battery ground cables disconnected (para. 4-68).

Maintenance Level
Unit

a. Lamp Removal

1. Remove light lens (1) and gasket (2) from instrument cluster (4).
2. Remove lamp (3) from instrument cluster (4).

b. Lamp Installation

1. Install lamp (3) on instrument cluster (4).
2. Install gasket (2) and lens (1) on instrument cluster (4).

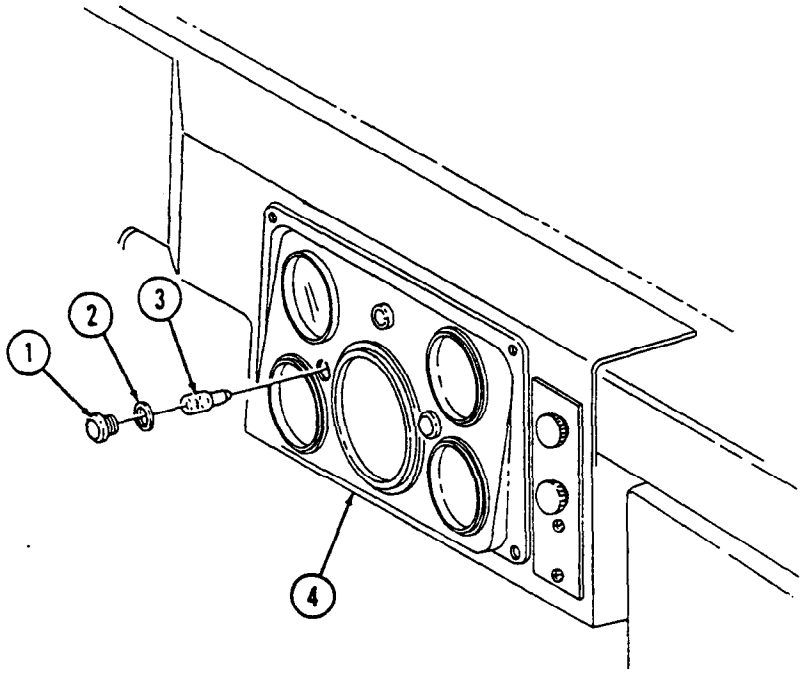

4-19. INSTRUMENT CLUSTER LIGHT REPLACEMENT (Cont'd)

c. Light Assembly Removal

1. Remove two light lenses (1) and gaskets (2) from light assemblies (6).
2. Remove lamp (3) from light assembly (6) being replaced.
3. Remove all electrical gauges (para. 4-16) and speedometer/odometer (para. 4-17).
4. Separate instrument cluster (4) from backing panel (7).
5. Disconnect harness lead 40B (5) from light assembly (6).
6. Remove two screws (8) and light assembly (6) from backing panel (7).

d. Light Assembly Installation

1. Install light assembly (6) on backing panel (7) with two screws (8).
2. Install backing panel (7) on instrument cluster (4).
3. Install all electrical gauges (para. 4-16) and speedometer/odometer (para. 4-17).
4. Connect harness lead 40B (5) to light assembly (6).
5. Install lamp (3) on light assembly (6).
6. Install two gaskets (2) and light lenses (1) on light assemblies (6).

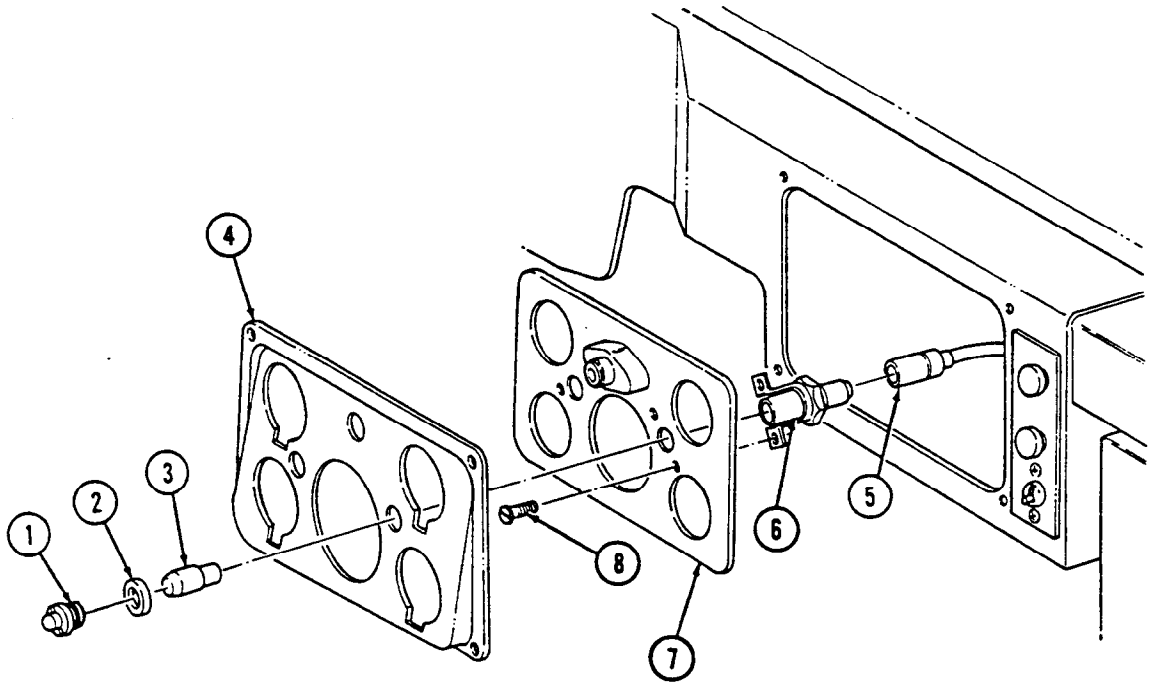

FOLLOW-ON TASK: Connect battery ground cables (para. 4-68).

4-20. WAIT-TO-START LAMP REPLACEMENT

This task covers:

a. Removal

b. Installation

INITIAL SETUP:

Tools

General mechanic's tool kit: automotive (Appendix B, Item 1)
Maintenance and repair shop equipment: automotive (Appendix B, Item 2)

Manual References

TM 9-2320-387-10
TM 9-2320-387-24P

Equipment Condition

- Battery ground cables disconnected (para. 4-68).
- Instrument cluster removed (para. 4-14).

Maintenance Level

Unit

NOTE

Prior to removal, tag leads and note position for installation.

a. Removal

1. Loosen nut (14) and lower steering column (7).
2. Remove cannon plug (16) from main light switch (15).
3. Remove two capscrews (17), washers (18), nuts (20), and washers (18) from instrument panel (6) and body (19).
4. Remove nut (22) and screw (23) from hand throttle bracket (21) and instrument panel (6).
5. Remove nut (13), washer (11), capscrew (10), and washer (11) from instrument panel (6), hand throttle bracket (21), and steering column bracket (12).
6. Remove screw (8) from instrument panel (6) and cowl (9).
7. Pull instrument panel (6) away from body (19).
8. Remove two screws (5) from wait-to-start lamp (4) and instrument panel (6).
9. Disconnect leads 571 (2) and 27 (3) from wiring harness (1).
10. Remove wait-to-start lamp (4).

b. Installation

1. Connect leads 571 (2) and 27 (3) to wiring harness (1).
2. Install wait-to-start lamp (4) on instrument panel (6) with two screws (5).
3. Install instrument panel (6) on cowl (9) with screw (8).
4. Install instrument panel (6) and hand throttle bracket (21) on steering column bracket (12) with washer (11), capscrew (10), washer (11), and nut (13).
5. Install hand throttle bracket (21) on instrument panel (6) with screw (23) and nut (22).
6. Install instrument panel (6) on body (19) with two washers (18), capscrews (17), washers (18), and nuts (20).
7. Install cannon plug (16) on main light switch (15).
8. Raise steering column (7) and tighten nut (14) to 31 lb-ft (42 N•m).

4-20. WAIT-TO-START LAMP REPLACEMENT (Cont'd)

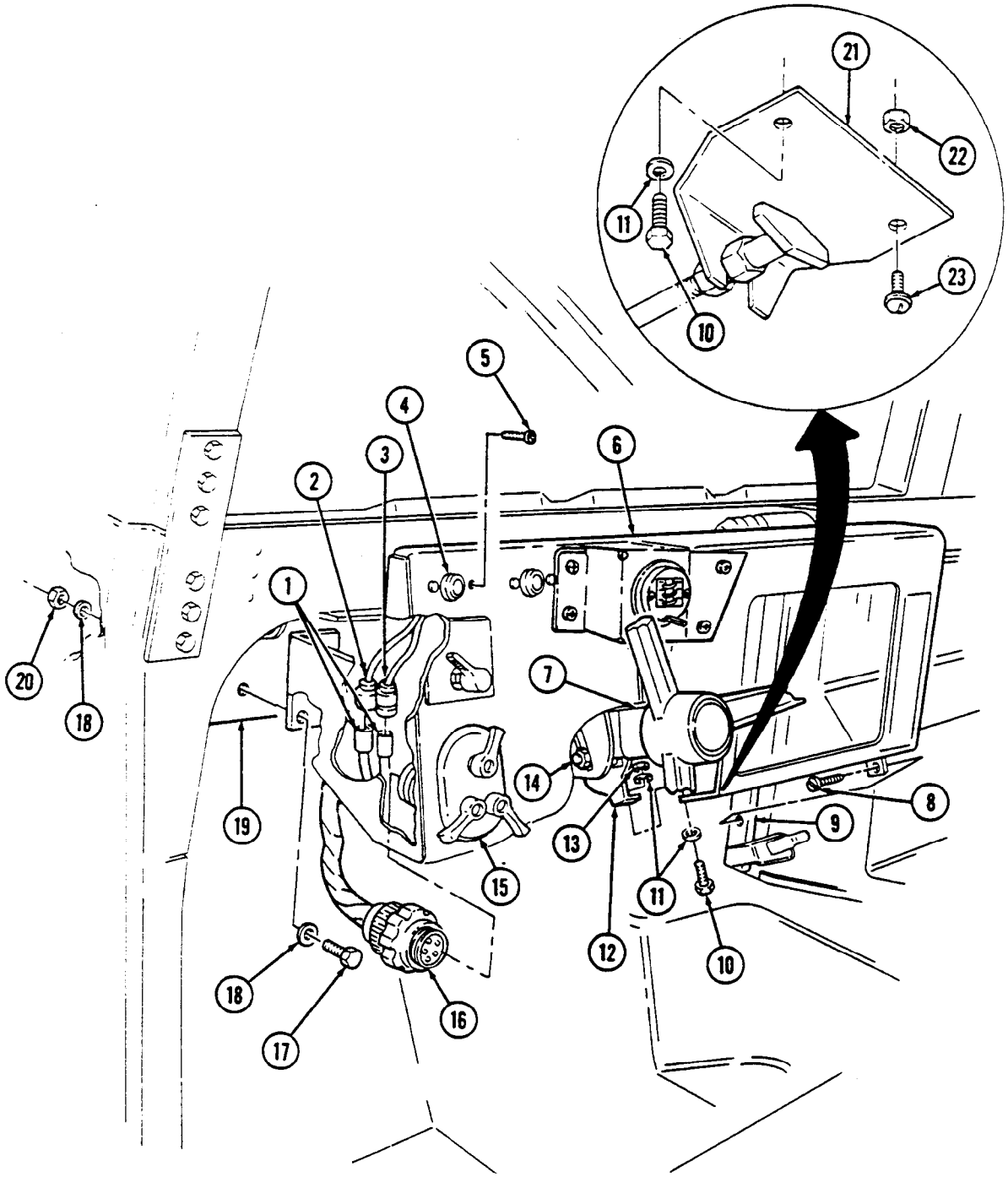

FOLLOW-ON TASKS:
- Install instrument cluster (para. 4-14).
- Connect battery ground cables (para. 4-68).
- Start engine (TM 9-2320-387-10) and check wait-to-start lamp assembly for operation.

4-21. BRAKE WARNING LAMP REPLACEMENT

This task covers:

a. Removal

b. Installation

INITIAL SETUP:

Tools

General mechanic's tool kit: automotive (Appendix B, Item 1)

Materials/Parts

Tape (Appendix C, Item 77)

Manual References

TM 9-2320-387 -10

TM 9-2320-387-24P

Equipment Condition

- Battery ground cables disconnected (para. 4-68).
- Air restriction gauge removed (para. 3-17).

NOTE

Prior to removal, tag leads and note position for installation.

a. Removal

1. Remove two screws (2) from brake warning lamp (1) and instrument panel (5).
2. Disconnect leads 67 (7) and 27 (3) from wiring harness leads (6).
3. Slide brake warning lamp (1) down toward steering column (4) and remove brake warning lamp (1).

b. Installation

NOTE

Place tape around lead wires to keep lamp in proper position during installation.

1. Install tape (8) around lamp (1) and lead wires (7) and (3)..
2. Slide brake warning lamp (1) up along steering column (4) and install brake warning lamp (1) on instrument panel (5) with two screws (2).
3. Connect leads 67 (7) and 27 (3) to wiring harness leads (6).

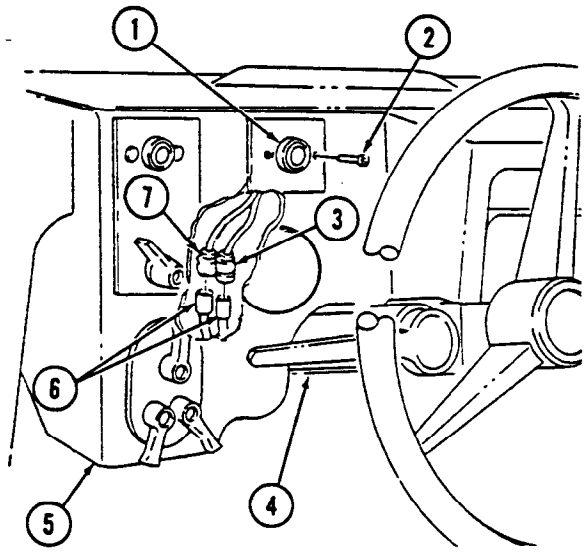

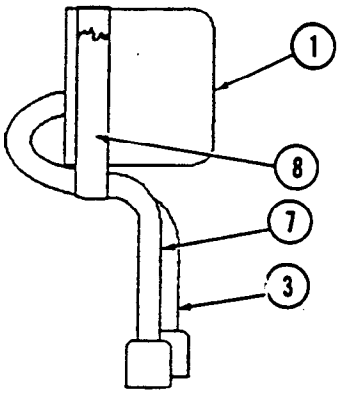

FOLLOW-ON TASKS:
- Install air restriction gauge (para. 3-17).
- Connect battery ground cables (para. 4-68).
- Start engine (TM 9-2320-387-10) and check brake warning lamp for operation.

4-22. HIGH-BEAM LAMP REPLACEMENT

This task covers:

a. Removal **b. Installation**

INITIAL SETUP:

Tools
General mechanic's tool kit: automotive (Appendix B, Item 1)

Materials/Parts
Gasket (Appendix G, Item 48)

Manual References
TM 9-2320-387-24P

Equipment Condition
- Electrical gauges removed (para. 4-16).
- Speedometer/odometer removed (para. 4-17).

Maintenance Level
Unit

NOTE

Prior to removal, tag leads for installation.

a. Removal

1. Remove two light lenses (7) from instrument cluster back panel (4).
2. Remove instrument cluster (6) from instrument cluster back panel (4).
3. Disconnect harness lead 57L (2) and lead 17B (3) from high-beam lamp (5).
4. Remove two screws (1), high-beam lamp (5), and gasket (8) from instrument cluster back panel (4).

b. Installation

1. Install gasket (8) and high-beam lamp (5) on instrument cluster back panel (4) with two screws (1).
2. Connect harness lead 57L (2) and lead 17B (3) to high-beam lamp (5).
3. Install instrument cluster (6) on instrument cluster back panel (4).
4. Install two light lenses (7) on instrument cluster back panel (4).

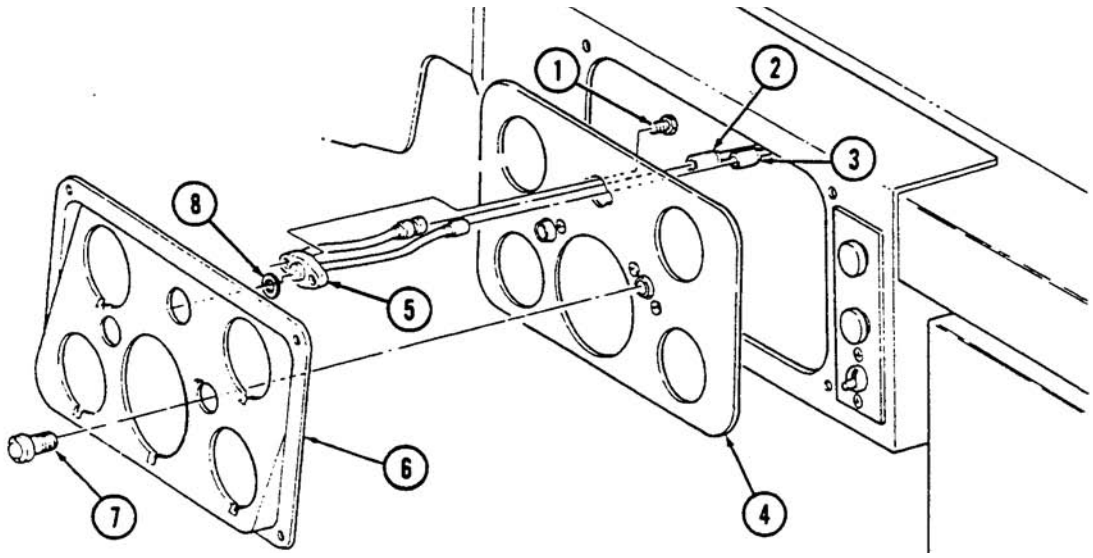

FOLLOW-ON TASKS:
- Install speedometer/odometer (para. 4-17).
- Install electrical gauges (para. 4-16).

4-23. PARKING BRAKE SWITCH REPLACEMENT

This task covers:

a. Removal

b. Installation

INITIAL SETUP:

Tools
General mechanic's tool kit:
automotive (Appendix B, Item 1)

Manual References
TM 9-2320-387-10
TM 9-2320-387-24P

Equipment Condition
Battery ground cables disconnected (para. 4-68).

Maintenance Level
Unit

NOTE

Prior to removal, tag leads for installation.

a. Removal

1. Disconnect parking brake switch leads 67C (1) and 67 (2) from wiring harness leads 67B (3) and 67E (4).
2. Remove parking brake switch (5) from parking brake lever (6).

b. Installation

1. Install parking brake switch (5) on parking brake lever (6).
2. Connect leads 67C (1) and 67 (2) to wiring harness leads 67B (3) and 67E (4).

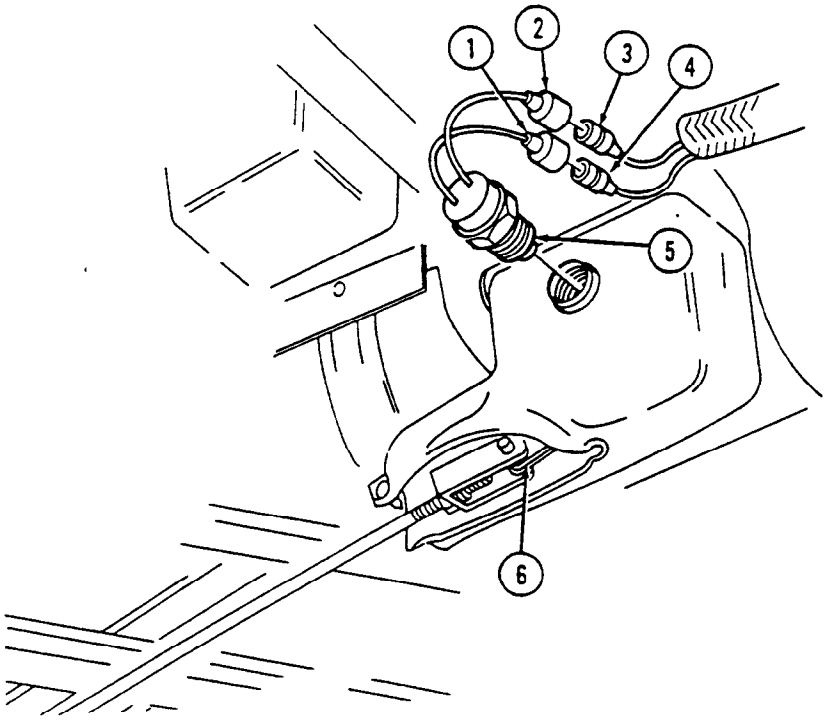

FOLLOW-ON TASKS:
- Connect battery ground cables (para. 4-68).
- Check parking brake switch operation (TM 9-2320-387-10).

4-24. HORN SWITCH REPLACEMENT

This task covers:

a. Removal **b. Installation**

INITIAL SETUP:

Tools
General mechanic's tool kit:
automotive (Appendix B, Item 1)

Materials/Parts
Sealing compound (Appendix C, Item 63)

Manual References
TM 9-2320-387-10
TM 9-2320-387-24P

Equipment Condition
Battery ground cables disconnected (para. 4-68).

Maintenance Level
Unit

a. Removal

1. Remove snapring (5) from horn switch (4) and steering wheel (1).
2. Pull horn switch (4) out and disconnect switch (4) from lead 25A (3) in steering shaft (2).

b. Installation

1. Apply sealing compound to bushing (6).
2. Connect lead 25A (3) to horn switch (4) and push switch (4) into steering shaft (2).
3. Install snapring (5) on horn switch (4) and steering wheel (1).

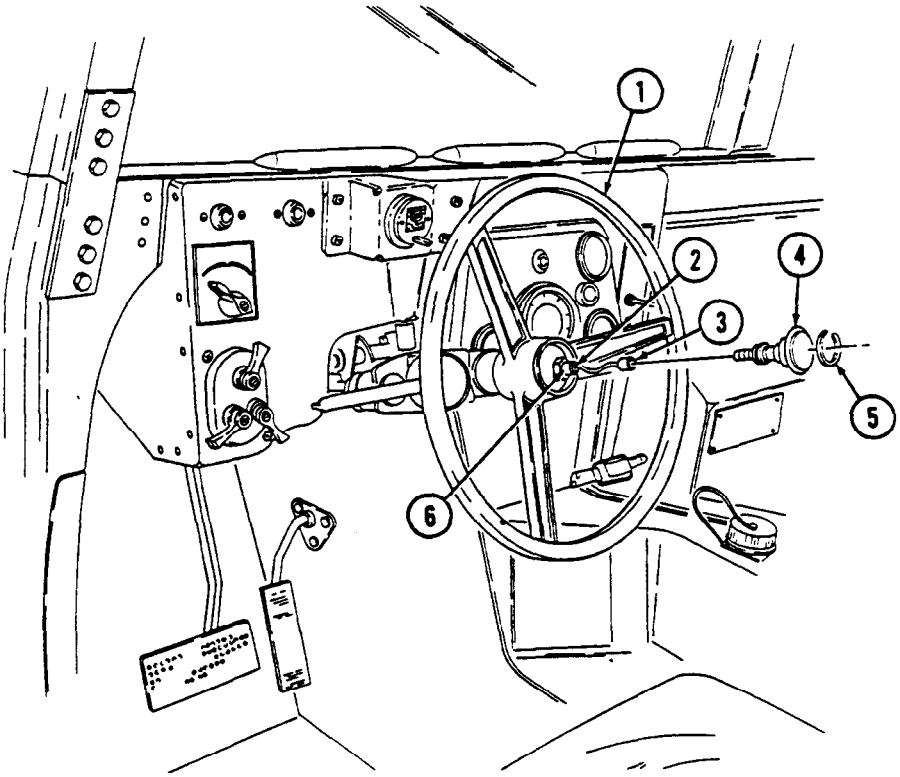

FOLLOW-ON TASKS:
- Connect battery ground cables (para. 4-68).
- Test horn for operation (TM 9-2320-387-10).

4-25. HORN CONTROL BRUSH REPLACEMENT

This task covers:

a. Removal

b. Installation

INITIAL SETUP:

Tools
General mechanic's tool kit:
automotive (Appendix B, Item 1)
Maintenance and repair shop equipment:
automotive (Appendix B, Item 2)

Materials/Parts
Silicone compound (Appendix C, Item 74)
Grease (Appendix C, Item 32)

Manual References
TM 9-2320-387-10
TM 9-2320-387-24P

Equipment Condition
Battery ground cables disconnected (para. 4-68).

Maintenance Level
Unit

a. Removal

1. Loosen nut (1) and lower steering column (5).
2. Disconnect lead 25A (3) from horn control brush (4).
3. Remove two screws (2) from horn control brush (4) and pry horn control brush (4) out of steering column (5).
4. Clean silicone compound from steering column (5).

b. Installation

1. Apply grease to brass ring (6) in steering column (5).
2. Apply silicone compound to bottom of horn control brush (4).
3. Install horn control brush (4) on steering column (5) with two screws (2).
4. Connect lead 25A (3) to horn control brush (4).
5. Raise steering column (5) and tighten nut (1) to 31 lb-ft (42 N•m).

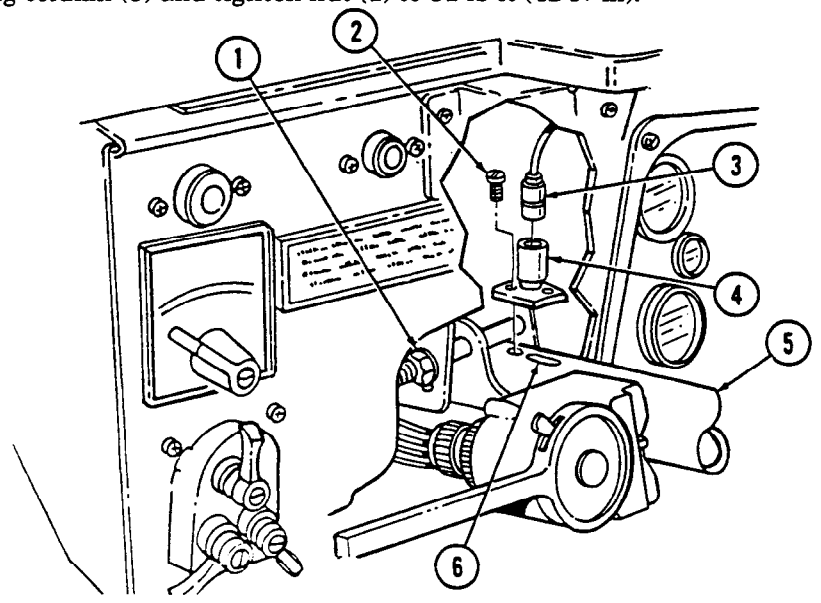

FOLLOW-ON TASKS:
- Connect battery ground cables (para. 4-68).
- Check horn for proper operation (TM 9-2320-387-10).

4-26. HORN REPLACEMENT

This task covers:

a. Removal **b. Installation**

INITIAL SETUP:

Tools
General mechanic's tool kit:
automotive (Appendix B, Item 1)

Materials/Parts
Two lockwashers (Appendix G, Item 172)

Manual References
TM 9-2320-387-10
TM 9-2320-387-24P

Equipment Condition
- Battery ground cables disconnected (para. 4-68).
- Hood raised and secured (TM 9-2320-387-10).

Maintenance Level
Unit

NOTE
Prior to removal, tag leads for installation.

a. Removal

1. Remove two capscrews (4), lockwashers (5), and horn (2) from bracket (3). Discard lockwashers (5).
2. Disconnect leads 25A (1) and 26A (6) from horn (2).

b. Installation

1. Connect leads 25A (1) and 26A (6) to horn (2).
2. Install horn (2) on bracket (3) with two lockwashers (5) and capscrews (4).

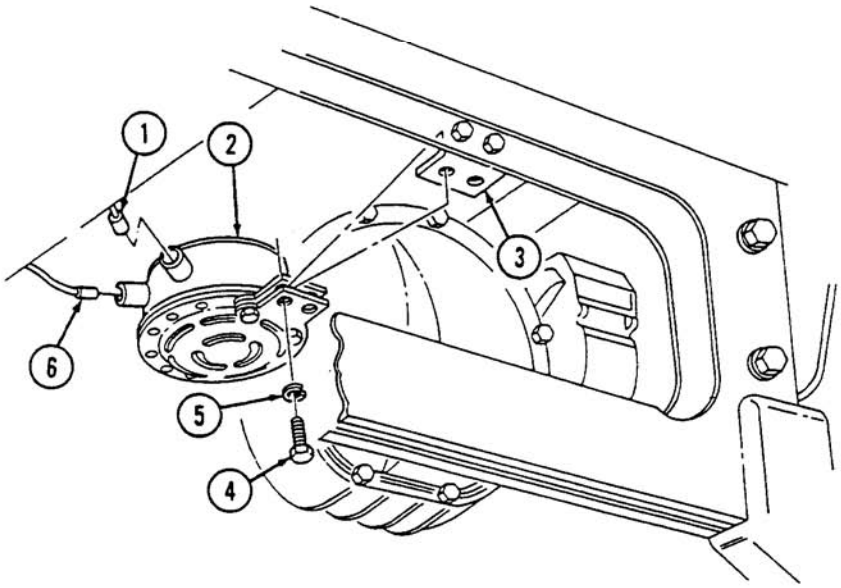

FOLLOW-ON TASKS:
- Connect battery ground cables (para. 4-68).
- Lower and secure hood (TM 9-2320-387-10).
- Check horn for proper operation (TM 9-2320-387-10).

4-27. HORN MOUNTING BRACKET REPLACEMENT

This task covers:

a. Removal **b. Installation**

INITIAL SETUP:

Tools
General mechanic's tool kit: automotive (Appendix B, Item 1)
Maintenance and repair shop equipment: automotive (Appendix B, Item 2)

Materials/Parts
Two lockwashers (Appendix G, Item 144)

Manual References
TM 9-2320-387-24P

Equipment Condition
Horn removed (para. 4-26).

Maintenance Level
Unit

a. Removal

Remove two nuts (1), lockwashers (5), capscrews (4), and horn mounting bracket (2) from front crossmember (3). Discard lockwashers (5).

b. Installation

Install horn mounting bracket (2) on front crossmember (3) with two capscrews (4), lockwashers (5), and nuts (1). Tighten nuts (1) to 10 lb-ft (14 N·m).

nuts (1). Tighten nuts (1) to 10 lb-ft (14 N·m).

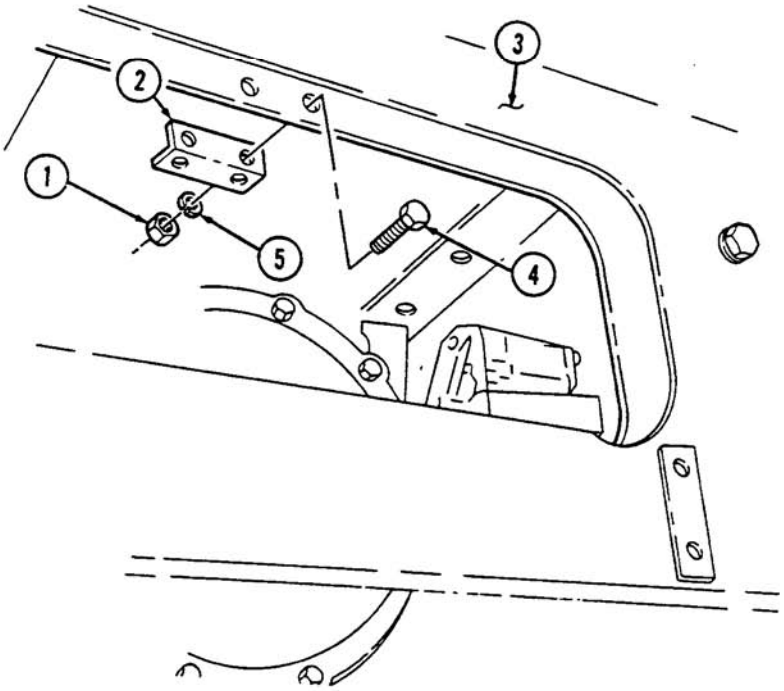

FOLLOW-ON TASK: Install horn (para. 4-26).

4-28. ENGINE TEMPERATURE SENDING UNIT REPLACEMENT

This task covers:

a. Removal

b. Installation

INITIAL SETUP:

Tools
General mechanic's tool kit: automotive (Appendix B, Item 1)

Materials/Parts
Sealing compound (Appendix C, Item 61)

Manual References
TM 9-2320-387-10
TM 9-2320-387-24P

Equipment Condition
- Battery ground cables disconnected (para. 4-68).
- Hood raised and secured (TM 9-2320-387-10).

Maintenance Level
Unit

NOTE

The engine temperature sending unit is located at left front of engine.

a. Removal

1. Disconnect lead 33B (1) from engine temperature sending unit (2).
2. Remove engine temperature sending unit (2) from engine (3).

b. Installation

1. Apply sealing compound to threads of engine temperature sending unit (2).
2. Install engine temperature sending unit (2) on engine (3).
3. Connect lead 33B (1) to engine temperature sending unit (2).

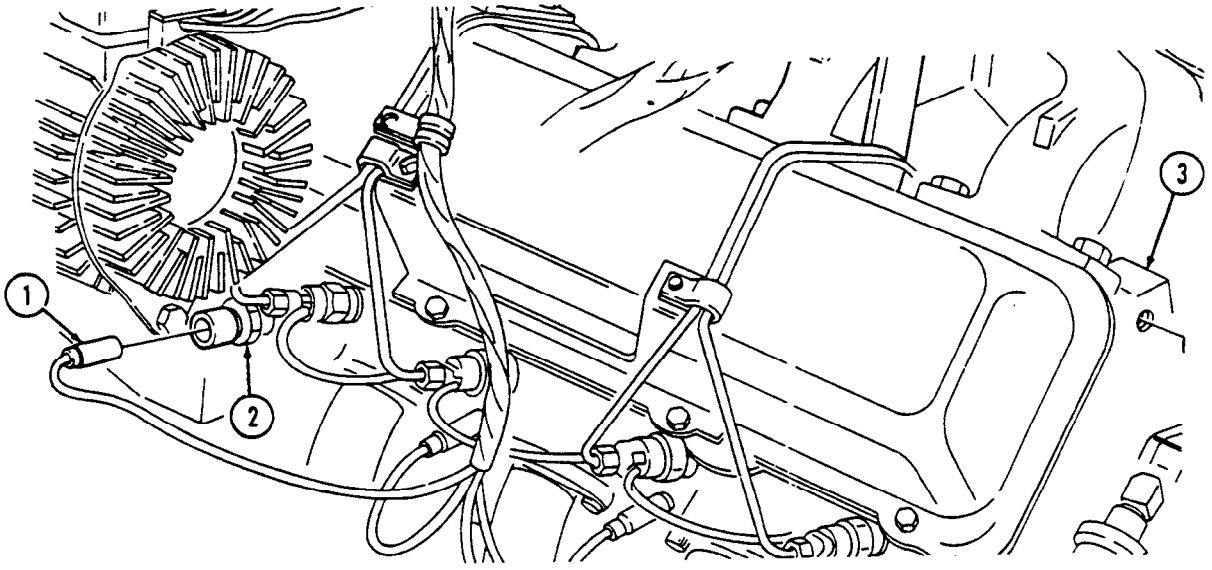

FOLLOW-ON TASKS:
- Connect battery ground cables (para. 4-68).
- Start engine (TM 9-2320-387-10) and check sending unit for leaks.
- Lower and secure hood (TM 9-2320-387-10).

4-29. OIL PRESSURE SENDING UNIT MAINTENANCE

This task covers:

a. Removal
b. Inspection
c. Installation

INITIAL SETUP:

Tools
General mechanic's tool kit:
automotive (Appendix B, Item 1)
Maintenance and repair shop equipment
automotive (Appendix B, Item 2)

Materials/Parts
Sealing compound (Appendix C, Item 61)

Manual References
TM 9-2320-387-10
TM 9-2320-387-24P

Equipment Condition
- Battery ground cables disconnected (para. 4-68).
- Engine access cover removed (para. 10-22).

Maintenance Level
Unit

a. Removal

1. Disconnect lead 36A (5) from oil pressure sending unit (4).
2. Remove clamp (1) and oil pressure sending unit (4) from bracket (2).
3. Disconnect oil pressure sending unit (4) from connector (3).

b. Inspection

Inspect connector (3) for damage. Replace if damaged.

c. Installation

1. Apply sealing compound to threads of oil pressure sending unit (4).
2. Connect oil pressure sending unit (4) to connector (3).
3. Install oil pressure sending unit (4) on bracket (2) with clamp (1). Tighten clamp to 10-20 lb-in. (1-2 N•m).
4. Connect lead 36A (5) to oil pressure sending unit (4).

4-29. OIL PRESSURE SENDING UNIT MAINTENANCE (Cont'd)

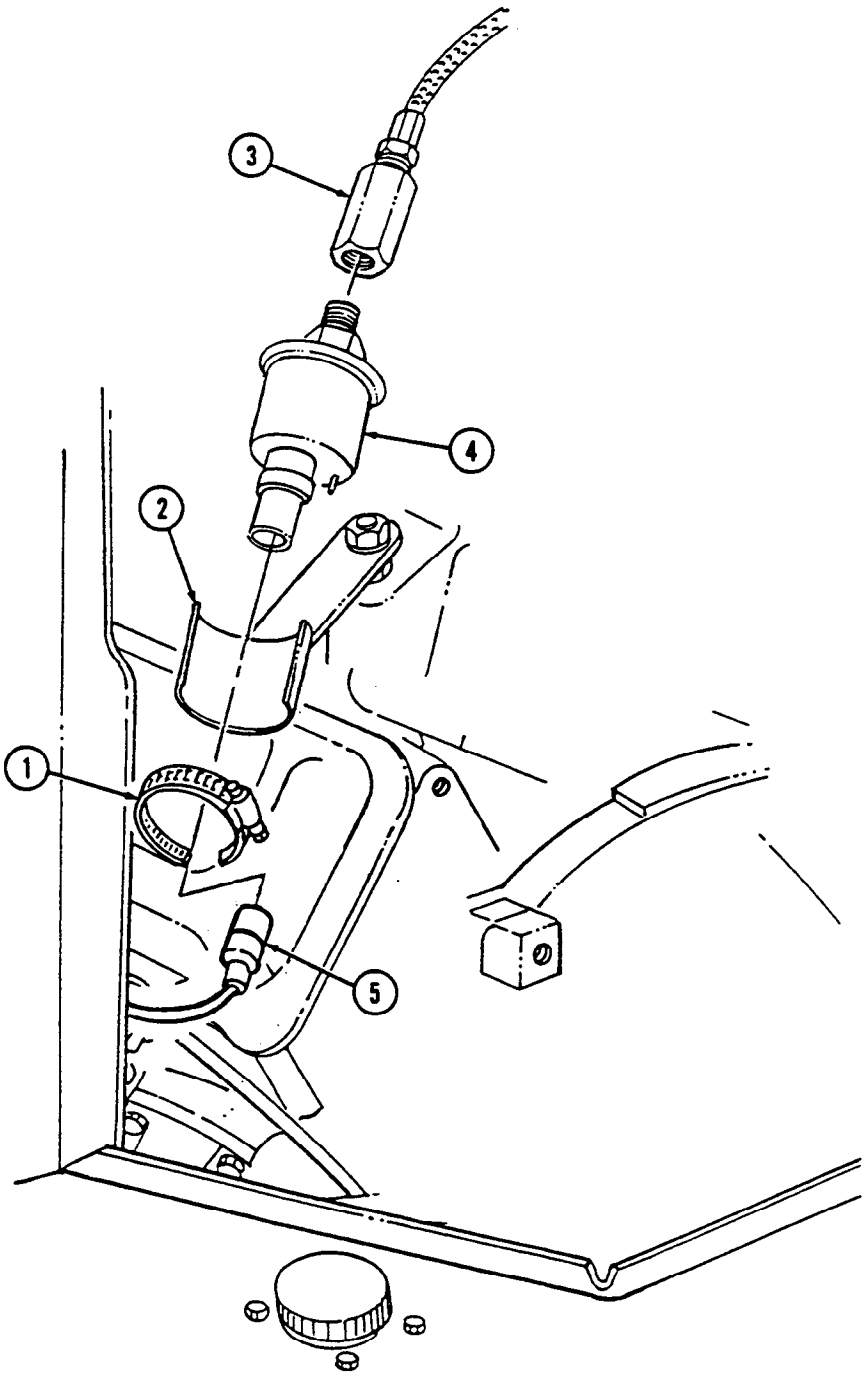

FOLLOW-ON TASKS:
- Connect battery ground cables (para. 4-68).
- Start engine (TM 9-2320-387-10) and check sending unit for leaks.
- Install engine access cover (para. 10-22).

4-30. FUEL PRESSURE TRANSDUCER REPLACEMENT

This task covers:

a. Removal

b. Installation

INITIAL SETUP:

Tools
General mechanic's tool kit:
automotive (Appendix B, Item 1)

Materials/Parts
Sealing compound (Appendix C, Item 61)

Manual References
TM 9-2320-387-10
TM 9-2320-387-24P

Equipment Condition
- Battery ground cables disconnected (para. 4-68).
- Hood raised and secured (TM 9-2320-387-10).

Maintenance Level
Unit

NOTE

The fuel pressure transducer is a sensor unit for diagnostic testing. It is mounted on top of the fuel filter on firewall of vehicle.

a. Removal

1. Disconnect multiple connector (2) from STE/ICE-R wiring harness (3).
2. Remove fuel pressure transducer (1) from fuel filter (4).

b. Installation

1. Apply sealing compound to threads of fuel pressure transducer (1).
2. Install fuel pressure transducer (1) on fuel filter (4).
3. Connect multiple connector (2) to STE/ICE-R wiring harness (3).

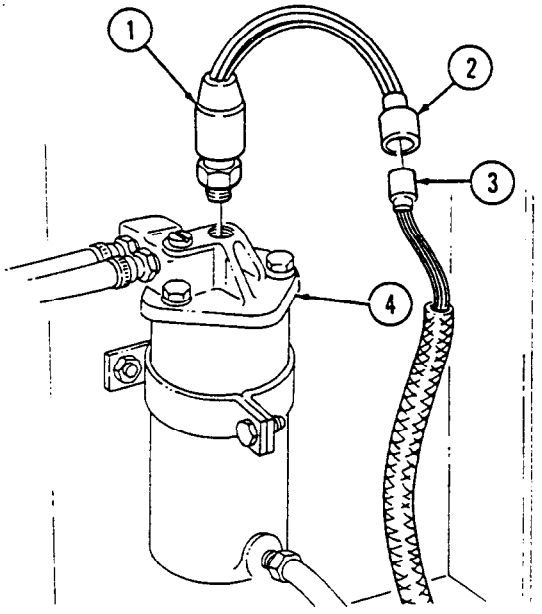

FOLLOW-ON TASKS:
- Connect battery ground cables (para. 4-68).
- Start engine (TM 9-2320-387-10) and check fuel pressure transducer for leaks.
- Lower and secure hood (TM 9-2320-387-10).

4-31. COLD-ADVANCE SWITCH REPLACEMENT

This task covers:

a. Removal **b. Installation**

INITIAL SETUP:

Tools
General mechanic's tool kit:
automotive (Appendix B, Item 1)

Materials/Parts
Sealing compound (Appendix C, Item 61)

Manual References
TM 9-2320-387-24P

Equipment Condition
- Battery ground cables disconnected (para. 4-68).
- Engine coolant drained as necessary (para. 3-61).
- Engine access cover removed (para. 10-22).

Maintenance Level
Unit

NOTE

- The cold-advance switch is located in the right cylinder head water jacket at the rear of the cylinder head just above the exhaust manifold.
- Prior to removal, tag leads for installation.

a. Removal

1. Disconnect leads 569G (1) and 569B (3) from engine harness (2).
2. Remove cold-advance switch (5) from engine (4).

b. Installation

1. Apply sealing compound to threads of cold-advance switch (5).
2. Install cold-advance switch (5) on engine (4).
3. Connect leads 569G (1) and 569B (3) to engine harness (2).

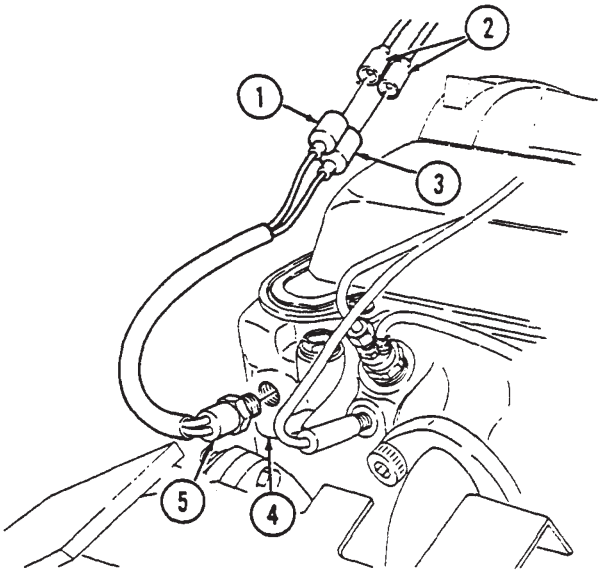

FOLLOW-ON TASKS:
- Connect battery ground cables (para. 4-68).
- Fill cooling system (para. 3-61).
- Install engine access cover (para. 10-22).

4-32. FUEL LEVEL SENDING UNIT REPLACEMENT

This task covers:

a. Removal **b. Installation**

INITIAL SETUP:

Tools
General mechanic's tool kit: automotive (Appendix B, Item 1)
Maintenance and repair shop equipment automotive (Appendix B, Item 2)

Materials/Parts
Five lockwashers (Appendix G, Item 150)
Gasket (Appendix G, Item 42)

Manual References
TM 9-2320-387-10
TM 9-2320-387-24P

Equipment Condition
Fuel tank removed (para. 3-25).

General Safety Instructions
Do not perform this procedure near fire, flames, or sparks.

Maintenance Level
Unit

WARNING

Diesel fuel is highly flammable. Do not perform this procedure near fire, flame, or sparks. Severe injury or death may result.

a. Removal

1. Remove five screws (1) and lockwashers (2) from fuel level sending unit (3) and fuel tank (6). Discard lockwashers (2).
2. Remove fuel level sending unit (3) from inside of fuel tank (6).
3. Remove and discard gasket (4).

b. Installation

1. Place gasket (4) on fuel level sending unit (3).
2. Install fuel level sending unit (3) into fuel tank (6), ensuring not to bend float arm (8).
3. Align holes of fuel level sending unit (3) to tank (6) so float (7) is pointed in same direction that tank filler neck (5) points.
4. Install fuel level sending unit (3) on fuel tank (6) with five lockwashers (2) and screws (1). Tighten screws (1) to 32 lb-in. (4 N·m).

4-32. FUEL LEVEL SENDING UNIT REPLACEMENT (Cont'd)

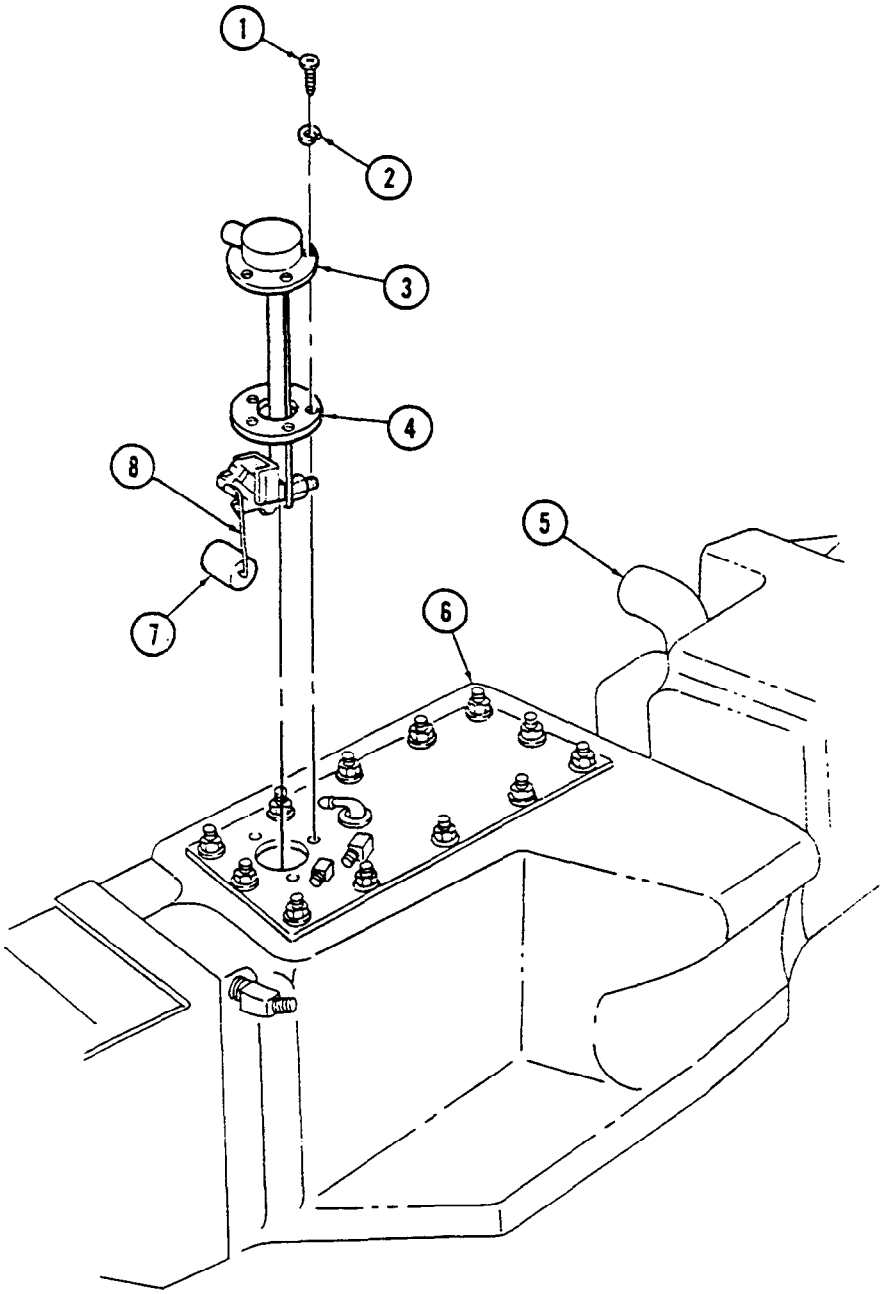

FOLLOW-ON TASKS:
- Install fuel tank (para. 3-25).
- Check fuel gauge for proper operation (TM 9-2320-387-10).

4-33. GLOW PLUG CONTROLLER REPLACEMENT

This task covers:

a. Removal

b. Installation

INITIAL SETUP:

Tools
General mechanic's tool kit:
automotive (Appendix B, Item 1)
Maintenance and repair shop equipment:
automotive (Appendix B, Item 2)

Materials/Parts
Grease (Appendix C, Item 36)
Sealing compound (Appendix C, Item 61)

Manual References
TM 9-2320-387-10
TM 9-2320-387-24P

Equipment Condition
- Battery ground cables disconnected (para. 4-68).
- Hood raised and secured (TM 9-2320-387-10).

Maintenance Level
Unit

NOTE

It may be necessary to clamp surge tank-to-lower radiator tube to prevent loss of coolant.

a. Removal

1. Disconnect multiple connector (2) from glow plug controller (1).
2. Remove glow plug controller (1) from water crossover (3).

b. Installation

CAUTION

- Do not attempt to start engine unless controller has been mounted in engine for a minimum of 10 minutes, or if all glow plugs are disconnected. Damage to glow plugs may result.
- Do not overtighten controller. Damage to water crossover may result.

1. Apply sealing compound to threads of glow plug controller (1).
2. Install glow plug controller (1) on water crossover (3). Tighten controller (1) to 14-20 lb-ft (19-27 N•m).
3. Apply grease to pins (4) of glow plug controller (1).
4. Connect multiple connector (2) to glow plug controller (1).

4-33. GLOW PLUG CONTROLLER REPLACEMENT (Cont'd)

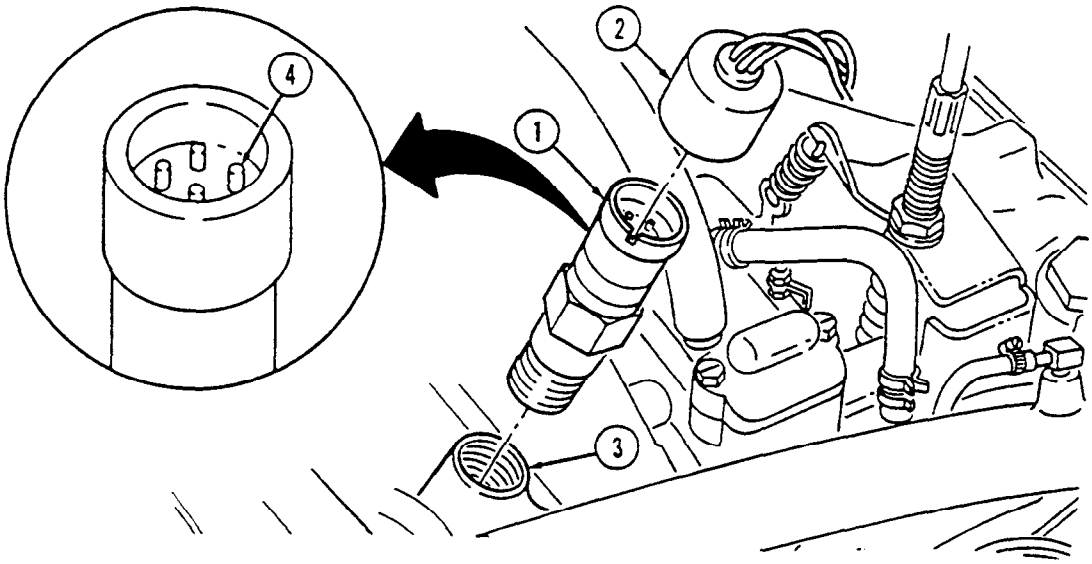

FOLLOW-ON TASKS:
- Connect battery ground cables (para. 4-68).
- Lower and secure hood (TM 9-2320-387-10).

4-34. FAN TEMPERATURE SWITCH REPLACEMENT

This task covers:

a. Removal

b. Installation

INITIAL SETUP:

Tools
General mechanic's tool kit: automotive (Appendix B, Item 1)

Materials/Parts
Sealing compound (Appendix C, Item 61)

Manual References
TM 9-2320-387-10
TM 9-2320-387-24P

Equipment Condition
- Battery ground cables disconnected (para. 4-68).
- Hood raised and secured (TM 9-2320-387-10).

Maintenance Level
Unit

NOTE

- The engine temperature switch is located on the top front side of the engine in the water crossover.
- Prior to removal, tag leads for installation.

a. Removal

1. Disconnect engine harness leads 458A (4) and 458B (3) from fan temperature switch (1).
2. Remove fan temperature switch (1) from water crossover (2).

b. Installation

1. Apply sealing compound to threads of fan temperature switch (1).
2. Install fan temperature switch (1) on water crossover (2).
3. Connect engine harness leads 458A (4) and 458B (3) to fan temperature switch (1).

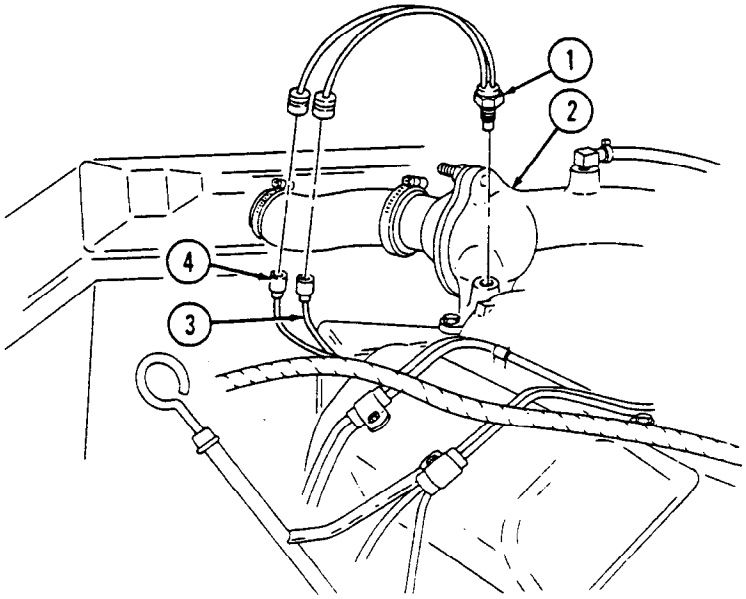

FOLLOW-ON TASKS:
- Connect battery ground cables (para. 4-68).
- Lower and secure hood (TM 9-2320-387-10).

4-35. TIME-DELAY MODULE REPLACEMENT

This task covers:

a. Removal **b. Installation**

INITIAL SETUP:

Tools
General mechanic's tool kit: automotive (Appendix B, Item 1)

Manual References
TM 9-2320-387-10
TM 9-2320-387-24P

Equipment Condition
- Battery ground cables disconnected (para. 4-68).
- Hood raised and secured (TM 9-2320-387-10).

Maintenance Level
Unit

a. Removal

1. Disconnect connector plug (3) from control valve connector (5).
2. Disconnect connector plug (2) from engine harness (4).
3. Remove two screws (1) and time-delay module (7) from cowl (6).

b. Installation

1. Install time-delay module (7) on cowl (6) with two screws (1).
2. Connect connector plug (2) to engine harness (4).
3. Connect connector plug (3) to control valve connector (5).

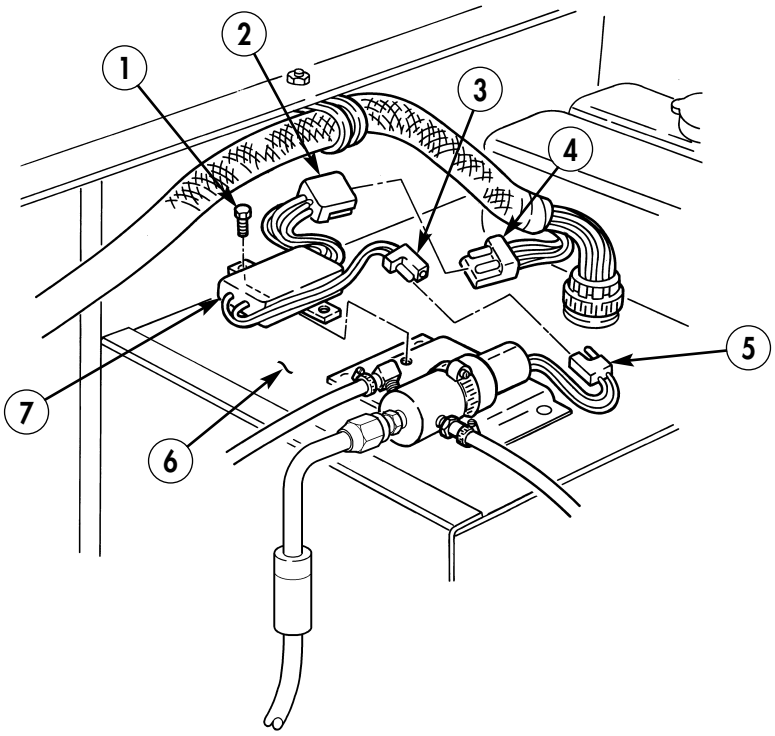

FOLLOW-ON TASKS:
- Connect battery ground cables (para. 4-68).
- Lower and secure hood (TM 9-2320-387-10).

4-36. BACKUP LIGHT SWITCH REPLACEMENT

This task covers:

a. Removal **b. Installation**

INITIAL SETUP:

Tools
General mechanic's tool kit:
automotive (Appendix B, Item 1)

Materials/Parts
Tiedown strap (Appendix G, Item 328)

Manual References
TM 9-2320-387-24P

Equipment Condition
Shift controls housing removed (para. 5-7).

Maintenance Level
Unit

a. Removal

1. Remove boot (4) from shift controls housing assembly (1).
2. Remove two screws (5) from backup light switch (7) and housing assembly (1).
3. Remove tiedown strap (3) and backup light switch (7) from neutral start switch leads (2). Discard tiedown strap (3).

b. Installation

1. Install backup light switch (7) on shift controls housing assembly (1) with two screws (5).
2. Install tiedown strap (3) on leads from backup light switch (7) and neutral start switch leads (2).
3. Position neutral start switch leads (2) and backup light switch (7) leads through boot (4) and install boot (4) on housing assembly (1).

4-36. BACKUP LIGHT SWITCH REPLACEMENT (Cont'd)

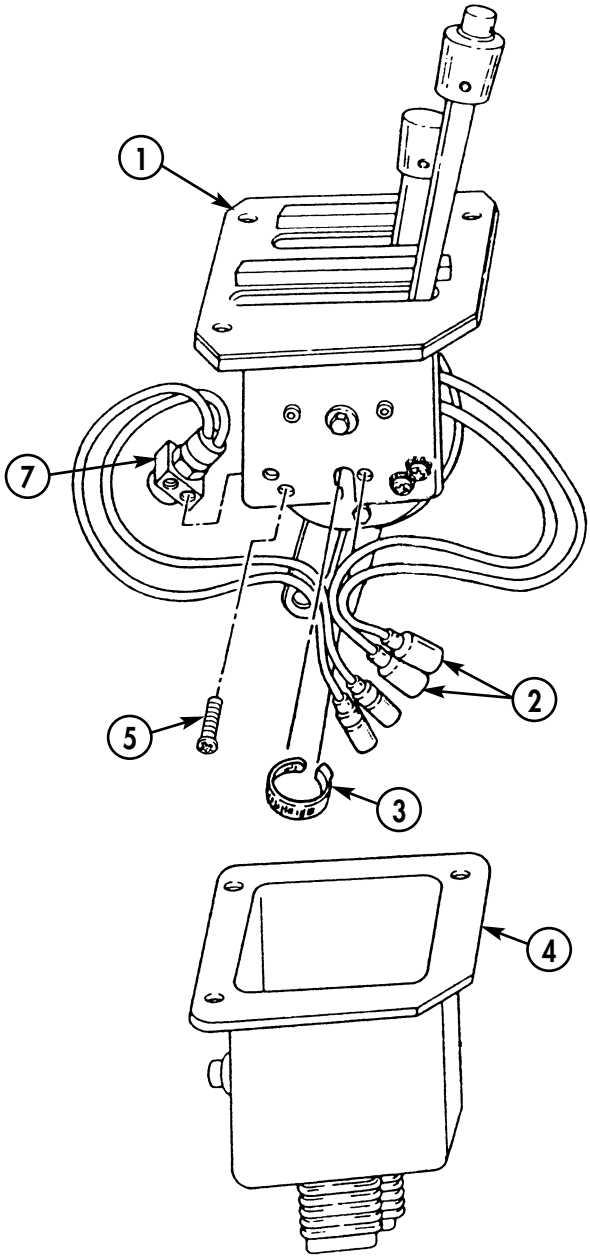

FOLLOW-ON TASK: Install shift controls housing (para. 5-7).

4-37. ENGINE RPM SENSOR REPLACEMENT

This task covers:

a. Removal **b. Installation**

INITIAL SETUP:

Tools
General mechanic's tool kit: automotive (Appendix B, Item 1)

Equipment Condition
- Battery ground cable disconnected (para. 4-68).
- Hood raised and secured (TM 9-2320-387-10).

Manual References
TM 9-2320-387-10
TM 9-2320-387-24P

Maintenance Level
Unit

a. Removal

1. Disconnect body harness lead (1) from rpm sensor lead (2).
2. Remove screw (4) and clamp (7) from front cover (8).
3. Remove capscrew (3) and rpm sensor (6) from front cover (8).

b. Installation

1. Install rpm sensor (6) in front cover (8) with capscrew (3).
2. Install rpm sensor lead (2) on front cover (8) with clamp (7) and screw (4).
3. Connector rpm sensor lead (2) to body harness lead (1).

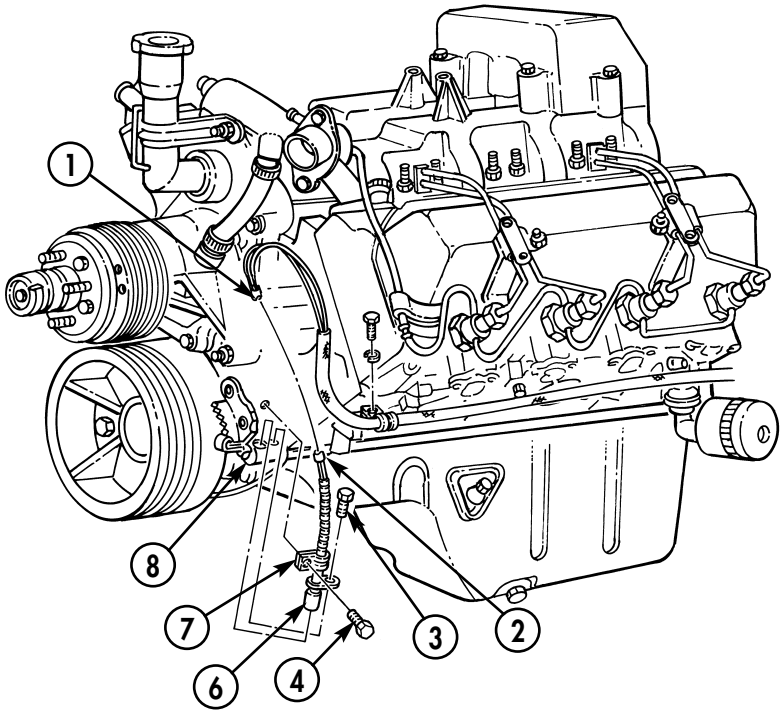

FOLLOW-ON TASKS:
- Connect battery ground cables (para. 4-68).
- Lower and secure hood (TM 9-2320-387-10).

Section IV. TRANSFER CASE AND TRANSMISSION ELECTRICAL MAINTENANCE

4-38. TRANSFER CASE AND TRANSMISSION ELECTRICAL MAINTENANCE TASK SUMMARY

TASK PARA.	PROCEDURES	PAGE NO.
4-39.	Transfer Case Indicator Switch Replacement	4-66
4-40.	Transfer Case Indicator Lamp Assembly Replacement	4-67
4-41.	Transmission Indicator Lamp Assembly Replacement	4-68
4-42.	Fan Cut-Off Switch Replacement	4-69
4-43.	Transmission Circuit Breakers Replacement	4-70
4-44.	Transmission Relay Replacement	4-72
4-45.	Transmission Control Module (TCM) Replacement	4-74
4-46.	Throttle Position (TP) Sensor Maintenance	4-76
4-47.	Transmission Input Speed Sensor (TISS) and Output Speed Sensor (TOSS) Maintenance	4-78
4-47.1.	Transmission Control Module (TCM) Capacitor Replacement	4-80

4-39. TRANSFER CASE INDICATOR SWITCH REPLACEMENT

This task covers:

a. Removal

b. Installation

INITIAL SETUP:

Tools
General mechanic's tool kit:
automotive (Appendix B, Item 1)

Manual References
TM 9-2320-387-24P

Equipment Condition
Battery ground cables disconnected (para. 4-68).

Maintenance Level
Unit

a. Removal

1. Disconnect leads 511A (4) and 511B (5) from indicator switch leads (3) on transfer case (1).
2. Remove indicator switch (2) from transfer case (1).

b. Installation

1. Install indicator switch (2) on transfer case (1).
2. Connect leads 511A (4) and 511B (5) to indicator switch leads (3).

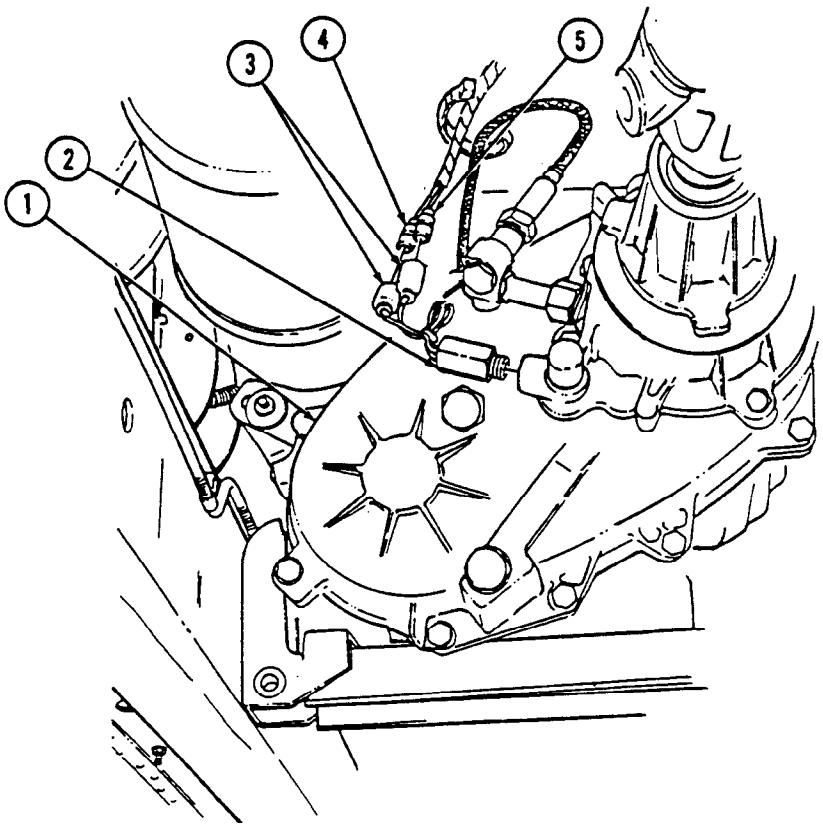

FOLLOW-ON TASK: Connect battery ground cables (para. 4-68).

4-40. TRANSFER CASE INDICATOR LAMP ASSEMBLY REPLACEMENT

This task covers:

a. Removal

b. Installation

INITIAL SETUP:

Tools
General mechanic's tool kit: automotive (Appendix B, Item 1)

Manual References
TM 9-2320-387-24P

Equipment Condition
- Battery ground cables disconnected (para. 4-68).
- Engine access cover removed (para. 10-22).

Maintenance Level
Unit

a. Removal

1. Disconnect lead 511A (8) from lamp assembly lead (7).
2. Remove nut (9), washer (6), ground lead (5), and washer (4) from stud (3).
3. Remove two screws (2) and lamp assembly (10) from body (1).

b. Installation

1. Install lamp assembly (10) on body (1) with two screws (2).
2. Install ground lead (5) on stud (3) with washers (4) and (6), and nut (9).
3. Connect lead 511A (8) to lamp assembly lead (7).

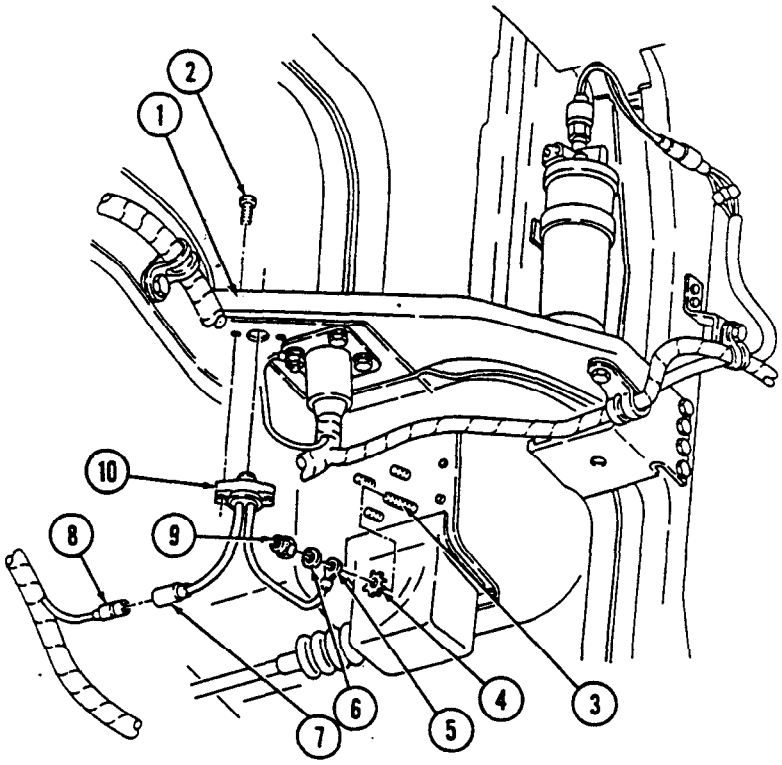

FOLLOW-ON TASKS:
- Install engine access cover (para. 10-22).
- Connect battery ground cables (para. 4-68).

4-41. TRANSMISSION INDICATOR LAMP ASSEMBLY REPLACEMENT

This task covers:

a. Removal

b. Installation

INITIAL SETUP:

Tools
General mechanic's tool kit:
automotive (Appendix B, Item 1)

Equipment Condition
- Battery ground cables disconnected (para. 4-68).
- Engine access cover removed (para. 10-22).

Manual References
TM 9-2320-387-24P

Maintenance Level
Unit

a. Removal

1. Disconnect lead 657 (4) from lamp assembly lead (5).
2. Remove two screws (2) and lamp assembly (1) from body (3).

b. Installation

1. Install lamp assembly (1) on body (3) with two screws (2).
2. Connect lead 657 (4) to lamp assembly lead (5).

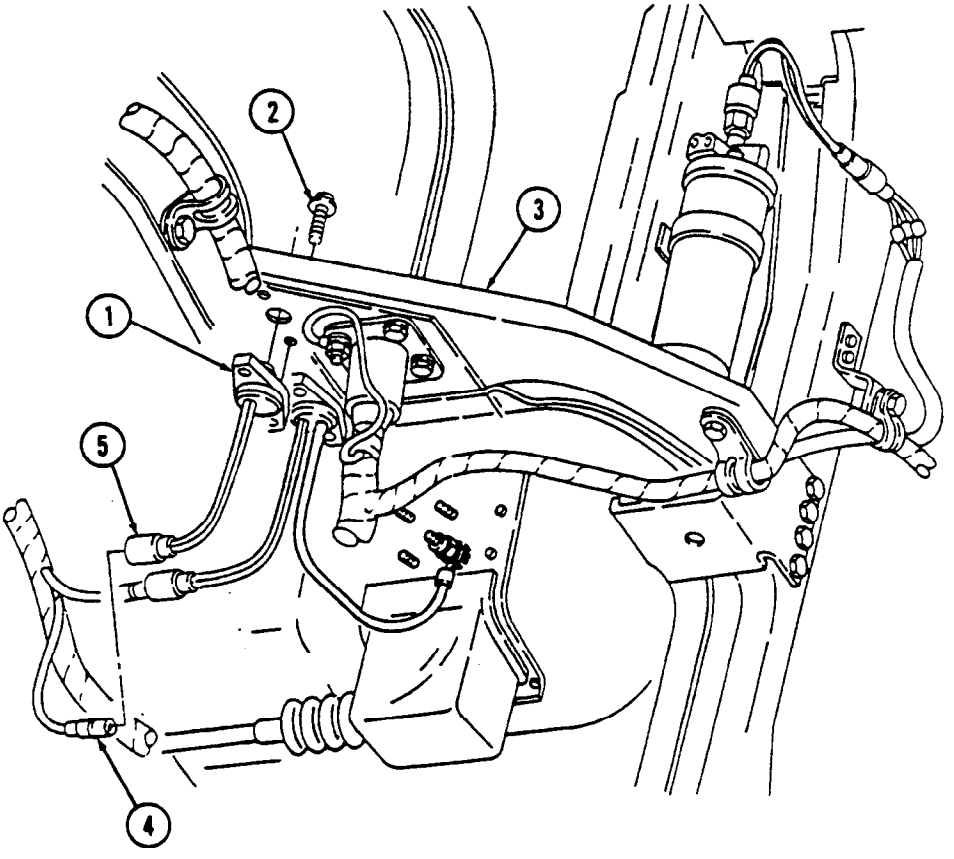

FOLLOW-ON TASKS:
- Install engine access cover (para. 10-22).
- Connect battery ground cables (para. 4-68).

4-42. FAN CUT-OFF SWITCH REPLACEMENT

This task covers:

a. Removal **b. Installation**

INITIAL SETUP:

Tools
General mechanic's tool kit: automotive (Appendix B, Item 1)

Materials/Parts
Two locknuts (Appendix G, Item 89)

Manual References
TM 9-2320-387-10
TM 9-2320-387-24P

Equipment Condition
- Battery ground cables disconnected (para. 4-68).
- Hood raised and secured (TM 9-2320-387-10).

Maintenance Level
Unit

NOTE

Prior to removal, tag leads for installation.

a. Removal

1. Disconnect harness leads 315A/315B (4) from leads 315 (5).
2. Remove two locknuts (1), washers (2), and switch (6) from bracket (3). Discard locknuts (1).

b. Installation

1. Install switch (6) on bracket (3) with two washers (2) and locknuts (1).
2. Connect harness leads 315A/315B (4) to leads 315 (5).

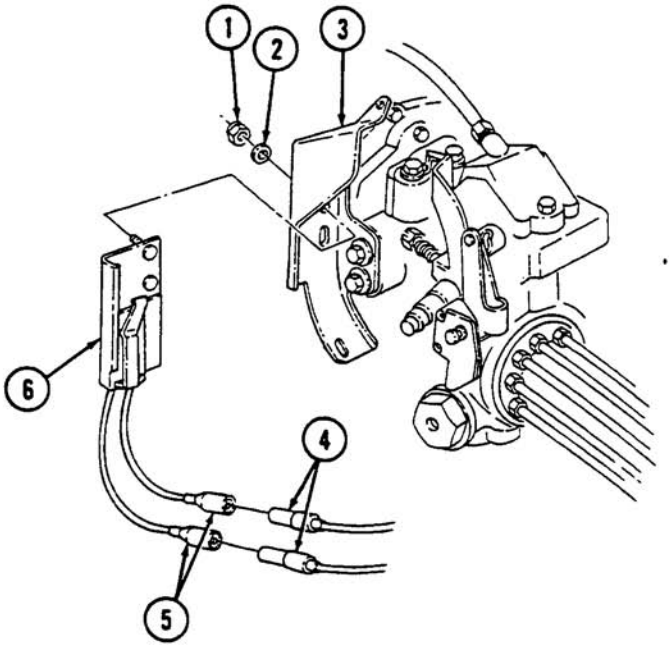

FOLLOW-ON TASKS:
- Connect battery ground cables (para. 4-68).
- Lower and secure hood (TM 9-2320-387-10).

4-43. TRANSMISSION CIRCUIT BREAKERS REPLACEMENT

This task covers:

a. Removal **b. Installation**

INITIAL SETUP:

Tools
General mechanic's tool kit:
automotive (Appendix B, Item 1)

Materials/Parts
Two lockwashers (Appendix G, Item 146)

Manual References
TM 9-2320-387-24P

Equipment Condition
Battery ground cables disconnected (para. 4-68).

Maintenance Level
Unit

NOTE

Prior to removal, tag leads for installation.

a. Removal

NOTE

Perform steps 1, 2, and 3 for M1113 models only. Perform steps 4 and 5 for M1114 models only.

1. Remove three capscrews (1) from coverplate (2) and B-beam (3).
2. Remove two nuts (4), washers (5), capscrews (11), and washers (10) from coverplate (2) and B-beam (3).
3. Remove two capscrews (9), lockwashers (8), washers (7), and coverplate (2) from battery box (6). Discard lockwashers (8).
4. Remove two capscrews (15) from coverplate (2) and B-beam (3).
5. Remove two capscrews (14), lockwashers (13), washers (12), and coverplate (2) from battery box (6). Discard lockwashers (13).
6. Disconnect two leads (17) from circuit breaker (18).
7. Remove two nuts (16), circuit breaker (18), and screws (19) from coverplate (2).

b. Installation

1. Install circuit breaker (18) on coverplate (2) with two screws (19) and nuts (16).
2. Connect two leads (17) to circuit breaker (18).

NOTE

Perform steps 3, 4, and 5 for M1113 models only. Perform steps 6 and 7 for M1114 models only.

3. Install coverplate (2) on battery box (6) with two washers (7), lockwashers (8), and capscrews (9).
4. Install coverplate (2) on B-beam (3) with three capscrews (1).
5. Install coverplate (2) on B-beam (3) with two washers (10), capscrews (11), washers (5), and nuts (4).
6. Install coverplate (2) on battery box (6) with two washers (12), lockwashers (13), and capscrews (14).
7. Secure coverplate (2) to B-beam (3) with two capscrews (15).

4-43. TRANSMISSION CIRCUIT BREAKERS REPLACEMENT (Cont'd)

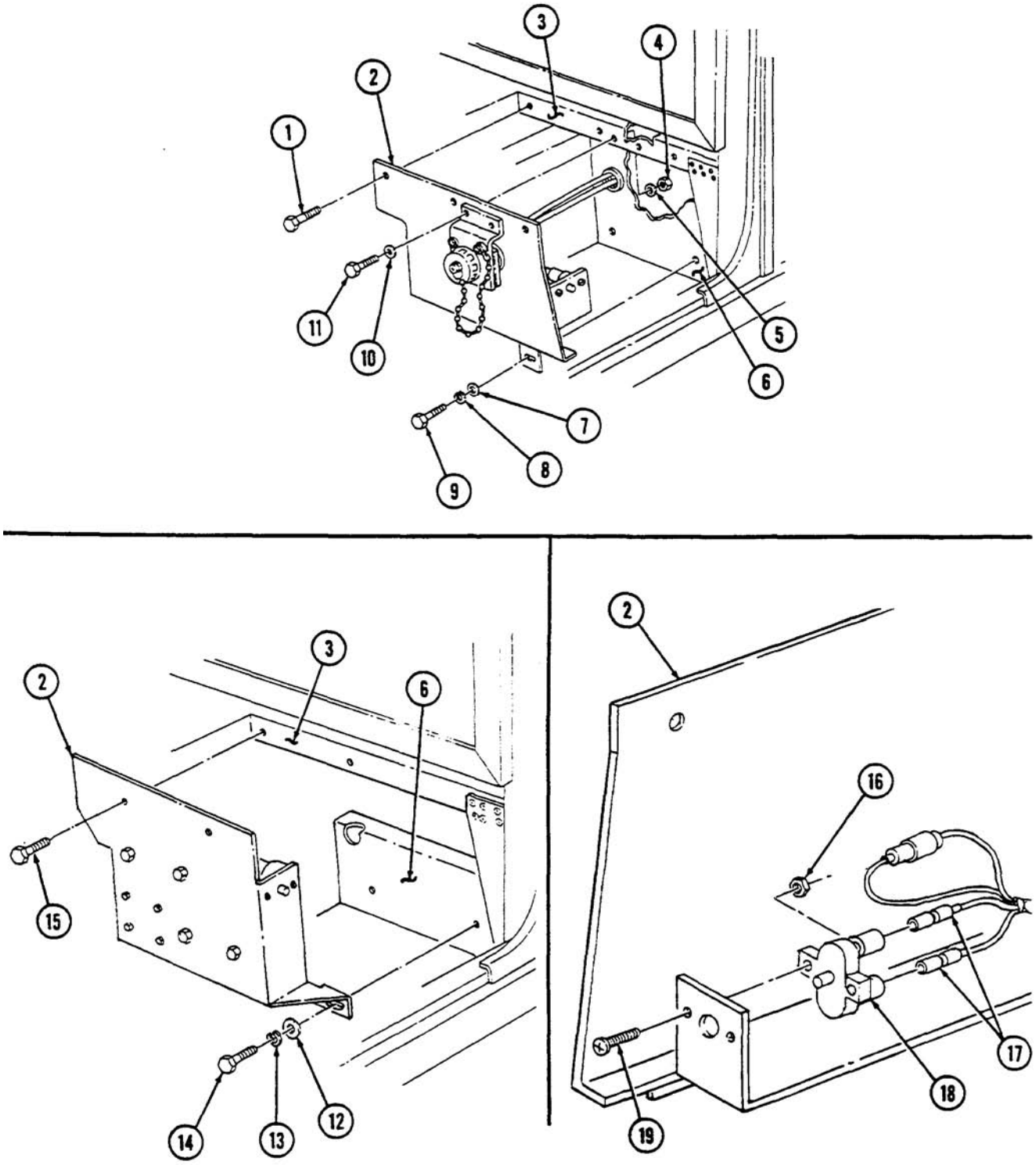

FOLLOW-ON TASK: Connect battery ground cables (para. 4-68).

4-44. TRANSMISSION RELAY REPLACEMENT

This task covers:

a. Removal **b. Installation**

INITIAL SETUP:

Tools
General mechanic's tool kit: automotive (Appendix B, Item 1)

Materials/Parts
Two lockwashers (Appendix G, Item 146)

Manual References
TM 9-2320-387-24P

Equipment Condition
Battery ground cables disconnected (para. 4-68).

Maintenance Level
Unit

NOTE

Prior to removal, tag leads for installation.

a. Removal

NOTE

Perform steps 1 and 2 for M1113 models only. Perform steps 3 and 4 for M1114 models only.

1. Remove two capscrews (9), lockwashers (8), and washers (7) from coverplate (2) and battery box (6). Discard lockwashers (8).
2. Remove two nuts (4), washers (5), five capscrews (1), two washers (10), and coverplate (2) from B-beam (3).
3. Remove two capscrews (16) from coverplate (2) and B-beam (11).
4. Remove two capscrews (15), lockwashers (14), washers (13), and coverplate (2) from battery box (12). Discard lockwashers (14).
5. Disconnect four leads (17) from relay leads (18).

NOTE

M1113 vehicles may be equipped with plusnuts instead of nuts as indicated in step 6.

6. Remove two nuts (21), washers (22), capscrews (19), and relay (20) from coverplate (2).

b. Installation

1. Install relay (20) on coverplate (2) with two capscrews (19), washers (22), and (if removed) nuts (21).
2. Connect four relay leads (18) to leads (17).

NOTE

Perform steps 3 and 4 for M1113 models only. Perform steps 5 and 6 for M1114 models only.

3. Install coverplate (2) on B-beam (3) with two washers (10), five capscrews (1), two washers (5), and nuts (4).
4. Install coverplate (2) on battery box (6) with two washers (7), lockwashers (8), and capscrews (9).

4-44. TRANSMISSION RELAY REPLACEMENT (Cont'd)

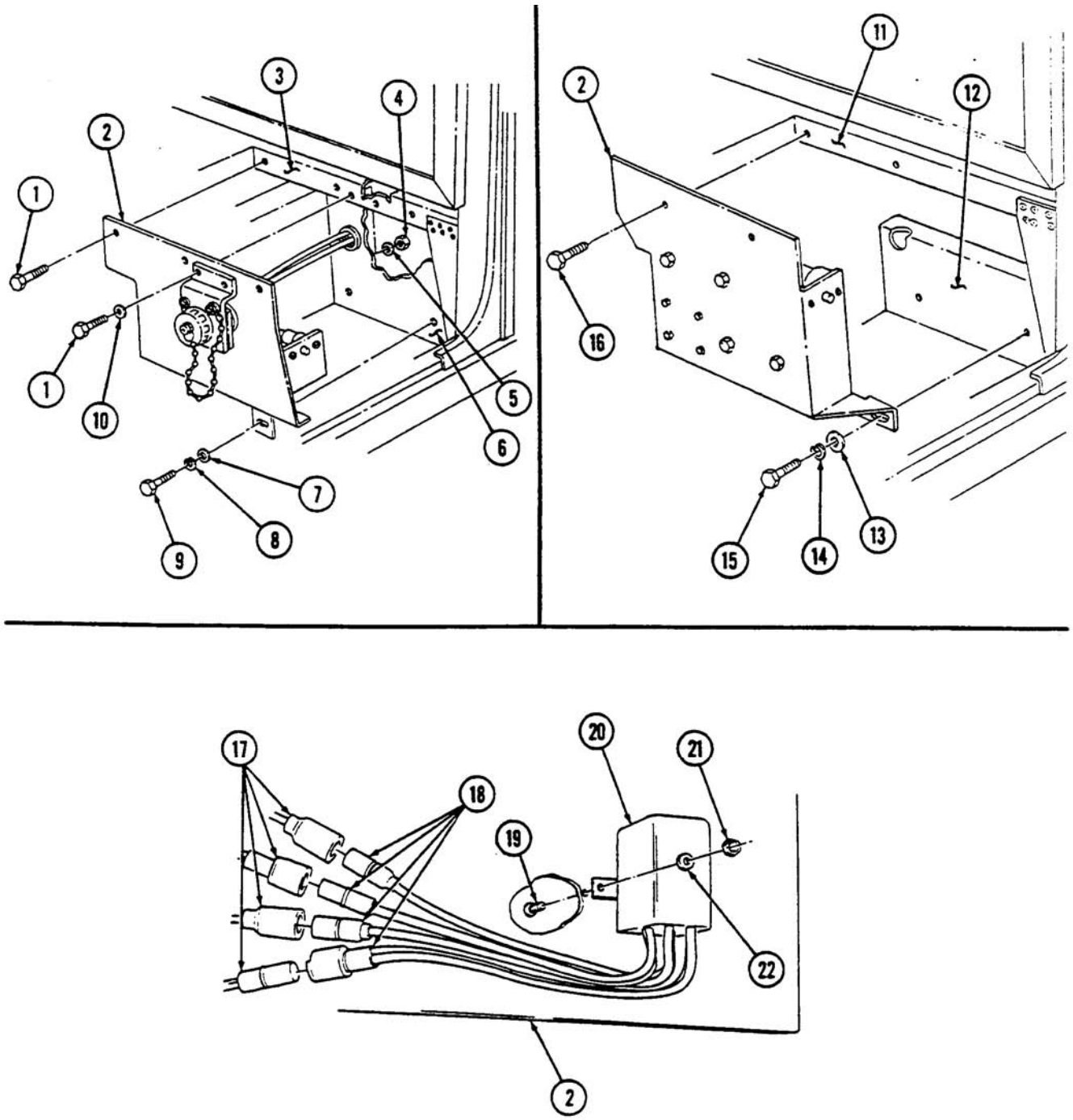

FOLLOW-ON TASK: Connect battery ground cables (para. 4-68).

4-45. TRANSMISSION CONTROL MODULE (TCM) REPLACEMENT

This task covers:

a. Removal **b. Installation**

INITIAL SETUP:

Tools
General mechanic's tool kit:
automotive (Appendix B, Item 1)
Maintenance and repair shop equipment:
automotive (Appendix B, Item 2)

Materials/Parts
Sealing compound (Appendix C, Item 10)
Four lockwashers (Appendix G, Item 146)
Four lockwashers (Appendix G, Item 145)

Personnel Required
One mechanic
One assistant

Manual References
TM 9-2320-387-24P

Equipment Condition
Battery ground cables disconnected (para. 4-68).

Maintenance Level
Unit

CAUTION

Ensure ignition switch is OFF before disconnecting or reconnecting Transmission Control Module (TCM). Failure to do this may cause internal damage to TCM.

a. Removal

NOTE

- Perform step 1 to remove left rear passenger seat (M1114 only).
- Perform step 1.1 for TCM access M1113 only.
- For E-Prom replacement, perform steps 1.2 through 4 only. For TCM replacement, perform steps 5 and 6 only.

1. Remove four socket-head screws (16), lockwashers (17), washers (18), and seat base (19) with seat (15) from floor (14). Discard lockwashers (17).

1.1. Open and secure left rear access panel (6.2).

1.2. Loosen ten screws (1) and remove cover (2) and foam insulation (4) from TCM (8).

2. Remove two screws (5) and access panel (6) from terminal box (9).
3. Remove E-Prom (6.1) from circuit board (7).
4. Clean sealant from TCM (8) and cover (2).
5. Disconnect harness connector (11) from TCM (8).
6. Remove four screws (12), washers (13.1), lockwashers (13), and TCM (8) from floor (14). Discard lockwashers (13).

b. Installation

NOTE

- For TCM installation, perform steps 1 and 2 only. For E-Prom replacement, perform steps 3 through 6 only.
- Perform step 7 for M1113 only and step 8 to install left rear passenger seat (M1114 only).

1. Install TCM (8) on floor (14) with four washers (13.1), lockwashers (13), and screws (12).
2. Connect harness connector (11) to TCM (8).
3. Install E-Prom (10) on circuit board (7).
4. Install access panel (6) on terminal box (9) with two screws (5).
5. Apply 1/8-in. bead of sealing compound in groove (3) on cover (2).
6. Install foam insulation (4) and cover (2) on TCM (8) and tighten ten screws (1) to 30 lb-in. (3 N·m).
7. Close and secure left rear access panel (6.2).
8. Install seat base (19) with seat (15) on floor (14) with four washers (18), lockwashers (17), and socket-head screws (16). Tighten socket-head screws (16) to 140-170 lb-in. (16-19 N·m).

4-45. TRANSMISSION CONTROL MODULE (TCM) REPLACEMENT (Cont'd)

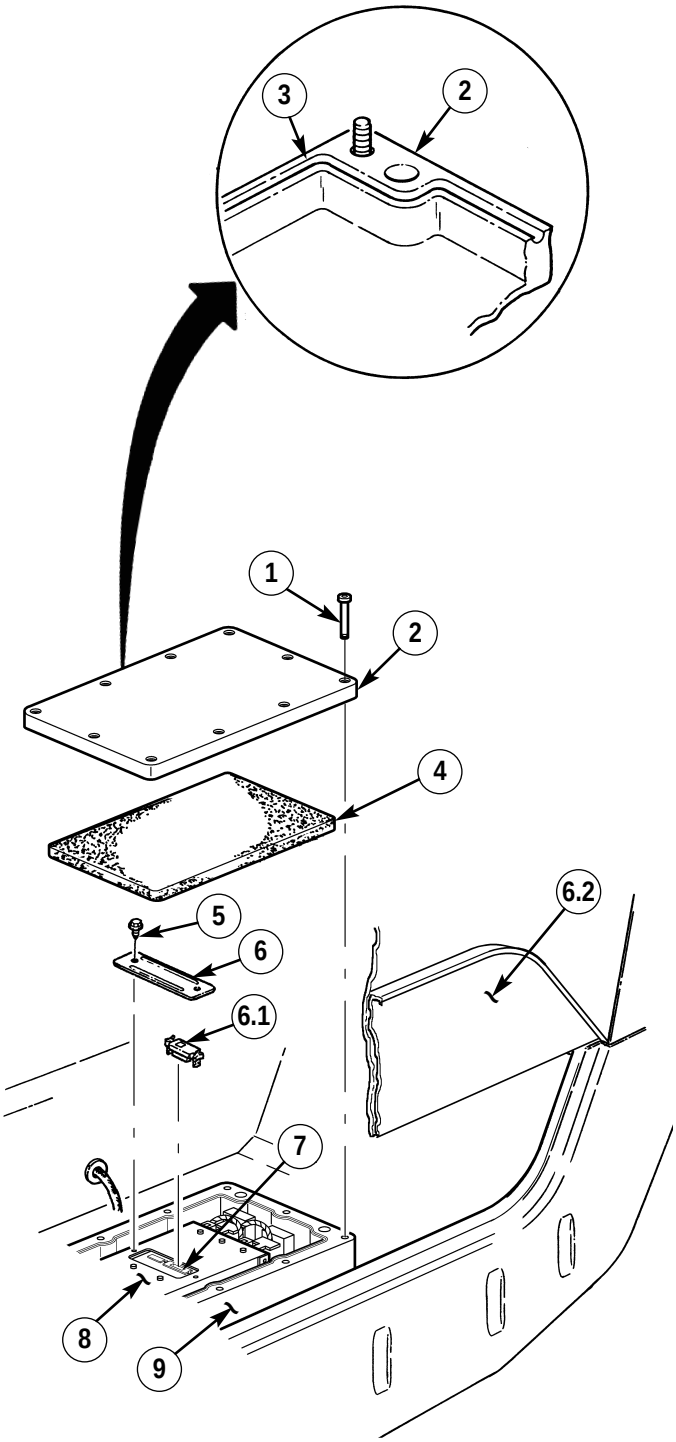

M1113

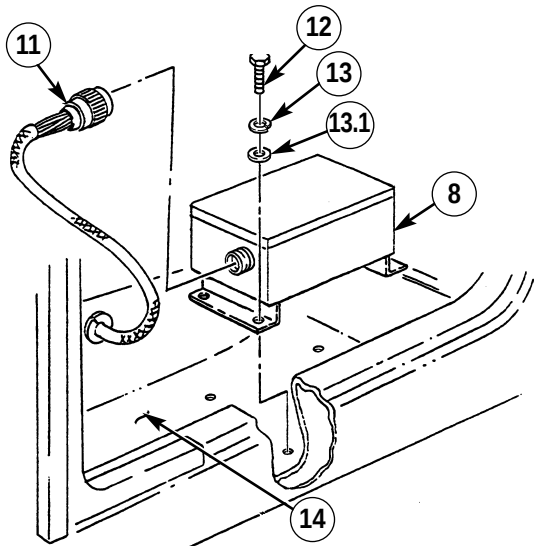

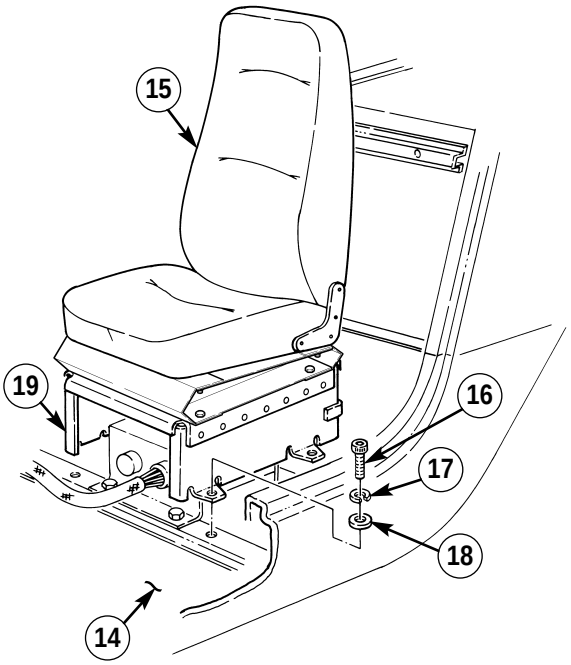

M1114

FOLLOW-ON TASK: Connect battery ground cables (para. 4-68).

4-46. THROTTLE POSITION (TP) SENSOR MAINTENANCE

This task covers:

a. Removal
b. Installation
c. Adjustment

INITIAL SETUP:

Tools
General mechanic's tool kit:
automotive (Appendix B, Item 1)

Test Equipment
Multimeter (Appendix B, Item 155)
Jumper wire (Appendix B, Item 79)
Valve gauge block (Appendix B, Item 45)

Manual References
TM 9-2320-387-10
TM 9-2320-387-24P

Equipment Condition
Air horn removed (para. 3-14).

Maintenance Level
Unit

a. Removal

CAUTION

The TP sensor is an electrical component and must not be soaked in any liquid cleaner or solvent, or damage may result.

1. Disconnect engine wiring harness connector (3) from TP sensor connector (4).
2. Remove two screws (7), washers (6), and TP sensor (5) from fuel injection pump (1).

b. Installation

1. Ensure throttle is closed, and place TP sensor (5) on throttle shaft (2) of fuel injection pump (1).
2. Rotate TP sensor (5) counterclockwise to align screw holes in sensor (5) with holes in injection pump (1).
3. Install TP sensor (5) on injection pump (1) with two washers (6) and screws (7). Do not tighten screws (7).
4. Adjust TP sensor (5).

c. Adjustment

1. Disconnect engine harness (12) and body harness connectors (11).
2. Install jumper wires between TP sensor connector (4) and body wiring harness connector (11).
3. Rotate ignition switch to RUN position (TM 9-2320-387-10).
4. Using a digital multimeter, measure voltage between terminals A and C of TP sensor connector (4). This voltage should be between 4.5 - 5.8 volts. Multiply by 0.33 to obtain the desired TP sensor voltage, and use this figure to adjust TP sensor.

NOTE

For example, 5.00 volts x 0.33 = 1.65 volts (±1% or 0.02 volts tolerance).

5. Install .646 side of valve gauge block between injection pump throttle lever stopscrew (8) and housing boss (9) on the injection pump (1).
6. Rotate injection pump throttle lever (10) so that stopscrew (8) holds valve gauge block against housing boss (9).

4-46. THROTTLE POSITION (TP) SENSOR MAINTENANCE (Cont'd)

NOTE

Keep throttle lever in this position during remainder of adjustment steps.

7. Measure voltage between terminals B and C of TP sensor connector (4).
   a. If measured voltage is within calculated specification, as indicated in step 4, remove jumper wire and connect engine harness connector (3) to TP sensor connector (4).
   b. If voltage is not within calculated specification, go to next step.
8. Loosen TP sensor mounting screws (7) and rotate TP sensor (5) toward rear of vehicle (counter-clockwise direction).
9. With voltmeter connected to terminals B and C of TP sensor connector (4), rotate TP sensor (5) slowly toward front of vehicle (clockwise direction) until voltmeter indicates voltage as determined in step 4.
10. Tighten TP sensor mounting screws (7) and confirm that adjustment did not change.
11. Remove jumper wire.
12. Remove valve gauge block.
13. Connect engine wiring harness connector (3) to TP sensor connector (4).
14. Connect body harness connector (11) and engine harness connector (12).

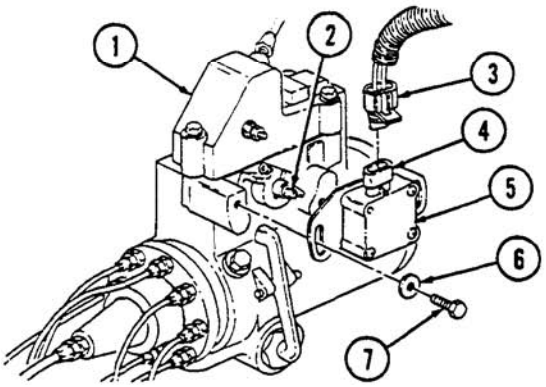

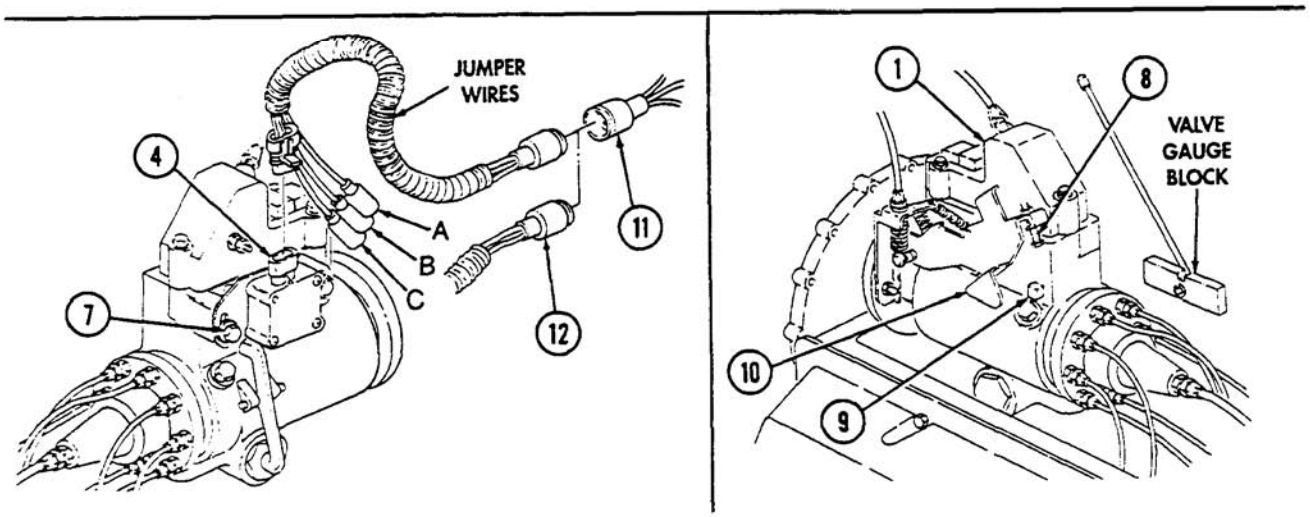

FOLLOW-ON TASK: Install air horn (para. 3-14).

4-47. TRANSMISSION INPUT SPEED SENSOR (TISS) AND OUTPUT SPEED SENSOR (TOSS) MAINTENANCE

This task covers:

a. Removal
b. Inspection
c. Installation

INITIAL SETUP:

Tools
General mechanic's tool kit: automotive (Appendix B, Item 1)

Materials/Parts
O-ring seal (Appendix G, Item 213)
Hydraulic fluid (Appendix C, Item 37)

Manual References
TM 9-2320-387-10
TM 9-2320-387-24P

Equipment Conditions
Battery ground cables disconnected (para. 4-68).

Maintenance Level
Unit

NOTE

Replacement procedure for input and output speed sensors are basically the same. This procedure covers the output speed sensor.

a. Removal

1. Disconnect speed sensor harness connector (5) from sensor (7).
2. Remove nut (10), capscrew (1), washer (2), and harness clip (4) from sensor bracket (8).
3. Remove capscrew (9) from sensor (7) and transmission (3). Slide bracket (8) off sensor (7).
4. Using a twisting motion, remove sensor (7) from transmission (3).

b. Inspection

Inspect O-ring seal (6) and replace if damaged.

c. Installation

1. Lubricate O-ring seal (6) with hydraulic fluid and install on sensor (7) if removed.
2. Using a twisting motion, install sensor (7) on transmission (3).
3. Slide bracket (8) over sensor (7) and install capscrew (9).
4. Install harness clip (4) on sensor bracket (8) with washer (2), capscrew (1), and nut (10).
5. Install connector (5) on sensor (7).

4-47. TRANSMISSION INPUT SPEED SENSOR (TISS) AND OUTPUT SPEED SENSOR (TOSS) MAINTENANCE (Cont'd)

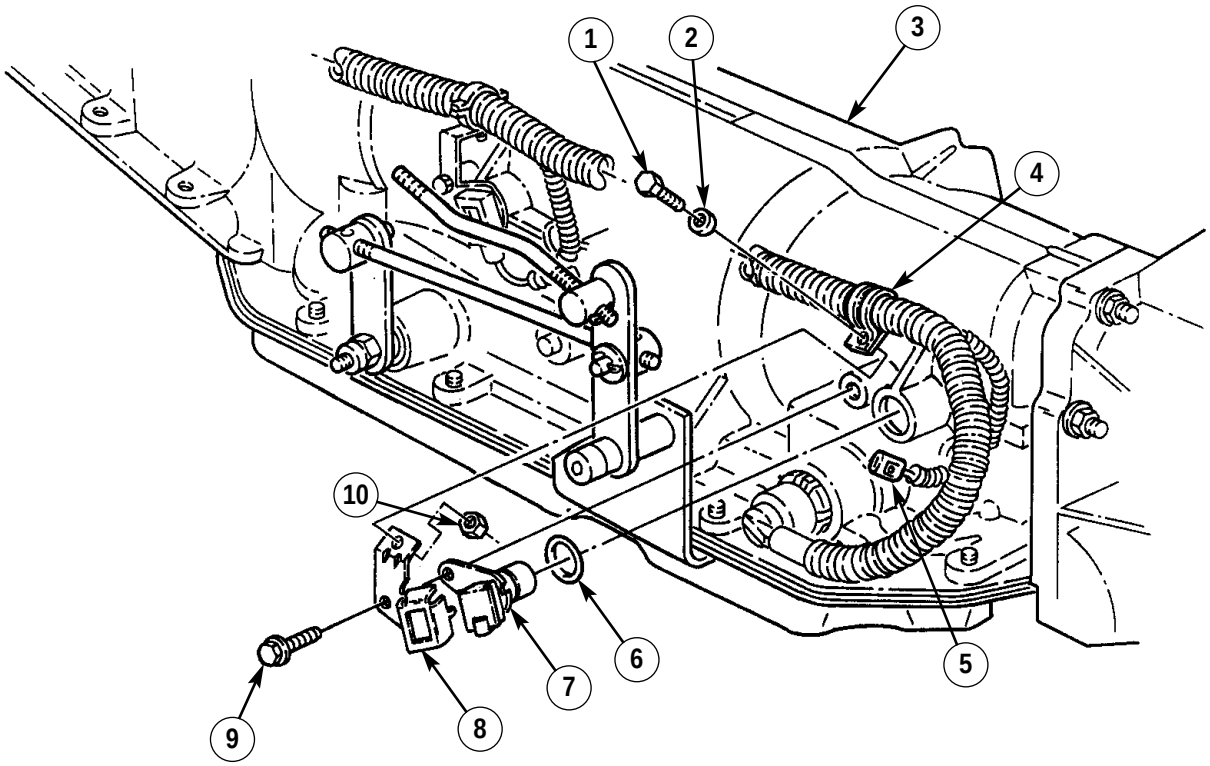

FOLLOW-ON TASKS:
- Connect battery ground cables (para. 4-68).
- Start engine (TM 9-2320-387-10) and check operation of transmission.

4-47.1. TRANSMISSION CONTROL MODULE (TCM) CAPACITOR REPLACEMENT

This task covers:

a. Removal **b. Installation**

INITIAL SETUP:

Tools
General mechanic's tool kit: automotive (Appendix B, Item 1)

Manual References
TM 9-2320-387-24P

Equipment Condition
Battery ground cables disconnected (para. 4-68).

Maintenance Level
Unit

a. Removal

1. Disconnect TCM capacitor connector (8) from body wiring harness connectors (7).
2. Remove nut (6), screw (1), washer (2), body wiring harness clamp (3), TCM capacitor clamp (4), and TCM capacitor (9) from body wiring harness bracket (5).
3. Remove TCM capacitor (9) from TCM capacitor clamp (4).

b. Installation

1. Install TCM capacitor (9) on body wiring harness bracket (5) with TCM capacitor clamp (4), body wiring harness clamp (3), washer (2), screw (1), and nut (6).
2. Connect TCM capacitor connector (8) to body wiring harness connector (7).

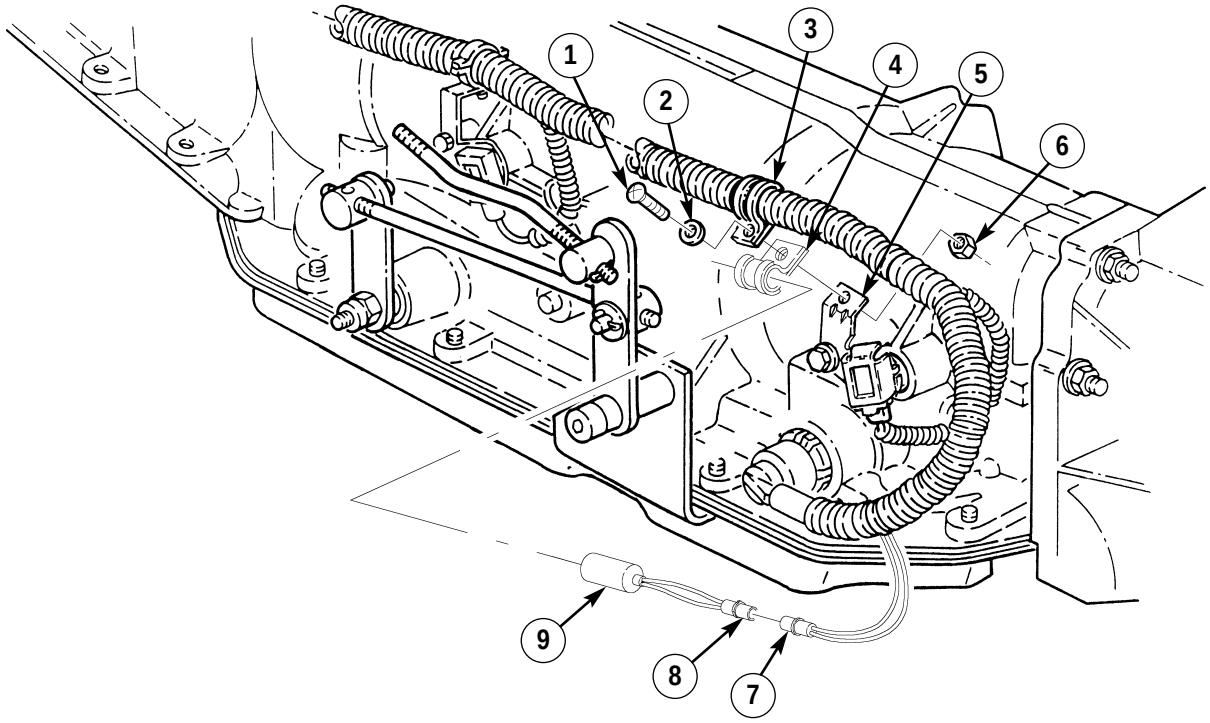

FOLLOW-ON TASK: Connect battery ground cables (para. 4-68).

Section V. LIGHTING SYSTEM MAINTENANCE

4-48. LIGHTING SYSTEM MAINTENANCE TASK SUMMARY

TASK PARA.	PROCEDURES	PAGE NO.
4-49.	Service Headlight Lamp Maintenance	4-82
4-50.	Service Headlight Assembly Replacement	4-84
4-51.	Blackout Drive Light Assembly Replacement	4-86
4-52.	Blackout Drive Light Lamp Replacement	4-88
4-53.	Front Composite Light Assembly Replacement	4-90
4-54.	Front Composite Light Lamp Replacement	4-92
4-55.	Rear Composite Light Lamp Replacement	4-93
4-56.	Side Marker Light Assembly Replacement	4-94
4-57.	Rear Composite Light Assembly Replacement	4-96
4-58.	Main Light Switch Replacement	4-98
4-59.	Headlight Beam Selector Switch and Bracket Replacement	4-99
4-60.	Stoplight/Torque Converter Clutch Brake Switch Maintenance	4-100
4-61.	Directional Signal Flasher Replacement	4-102
4-62.	Directional Signal Control Indicator Lamp Replacement	4-103
4-63.	Directional Signal Control Replacement	4-104
4-64.	Directional Signal Control Cancelling Ring Replacement	4-105
4-65.	Service Headlight and Blackout Drive Light Electrical Connector and Grommet Replacement	4-106

4-49. SERVICE HEADLIGHT LAMP MAINTENANCE

This task covers:

a. Removal
b. Installation
c. Adjustment

INITIAL SETUP:

Tools
General mechanic's tool kit:
automotive (Appendix B, Item 1)

Personnel Required
One mechanic
Once assistant

Manual References
TM 9-2320-387-10
TM 9-2320-387-24P

Equipment Condition
Battery ground cables disconnected (para. 4-68).

Maintenance Level
Unit

NOTE
Prior to removal, tag leads for installation.

a. Removal

1. Loosen three screws (1) on retaining ring (2) and remove retaining ring (2) from headlight housing (5).
2. Disconnect leads 17 (4), 18 (6), and 91 (7) from headlight housing (5) and remove lamp (3).

b. Installation

NOTE
Circuit numbers are marked on housing.

1. Connect leads 17 (4), 18 (6), and 91 (7) to headlight housing (5).
2. Install lamp (3) on housing (5) with retaining ring (2) and tighten three screws (1).
3. Connect battery ground cables (para. 4-68).

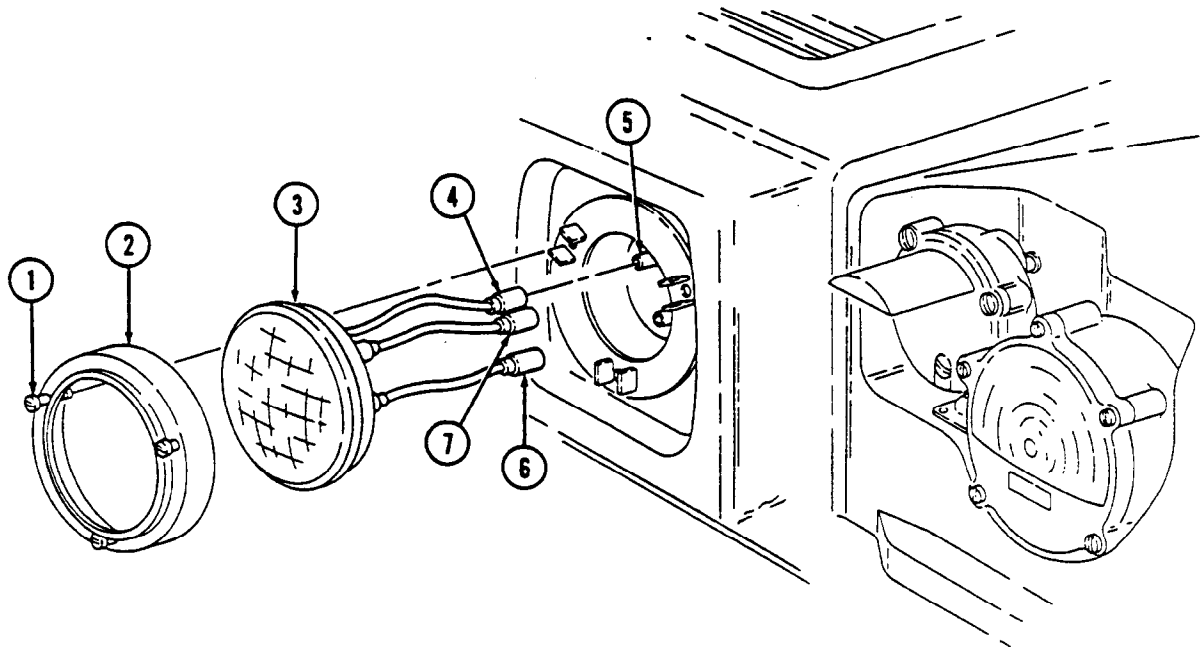

4-49. SERVICE HEADLIGHT LAMP MAINTENANCE (Cont'd)

c. Adjustment

NOTE

- Headlamp alignment is basically the same for both headlamps.
- Inflate tires on vehicle before starting procedure. (Refer to TM 9-2320-387-10.)
- Measured height (H) varies depending on model of vehicle and load configuration.

1. Position vehicle on level ground 25 ft. from and facing a vertical wall.
2. Measure height (H) from ground up to center of headlamp (3).
3. Using chalk, draw a horizontal line across vertical wall at center height (H) of headlamp.
4. Draw a vertical line through horizontal line for center position (C) of vehicle.
5. Measure distance from center to center of headlamp (D) and divide measurement in half.
6. Draw two vertical lines (D) at equal distance from center position line (C).
7. Measure down one-twelfth from horizontal line (H) and mark horizontal lines through headlamp vertical lines (D).
8. Turn headlamps on low beam and block out one headlamp.
9. Adjust headlamp (3) using vertical adjusting screw (8) and/or horizontal adjusting screw (9) until center of headlamp beam is aligned with lower horizontal and vertical lines.
10. Repeat steps 8 and 9 for other headlamp.

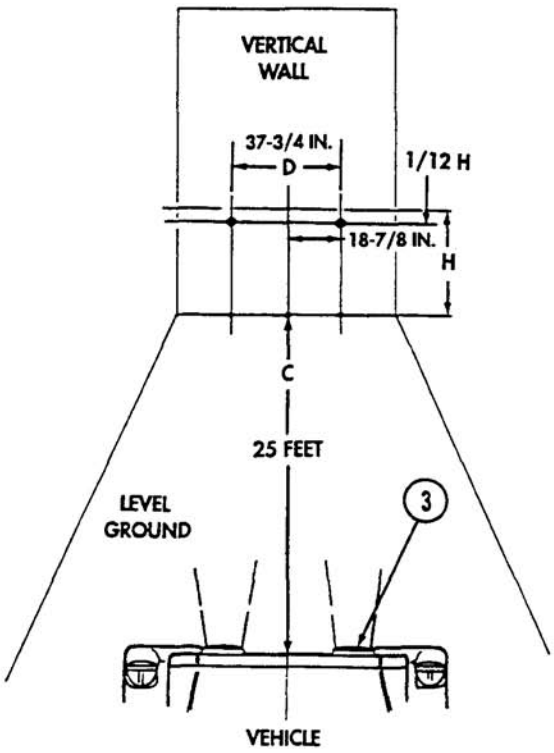

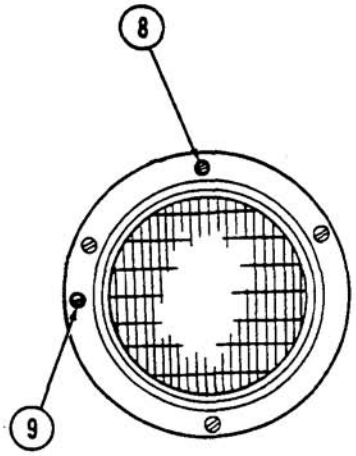

FOLLOW-ON TASK: Check headlight lamp for proper operation (TM 9-2320-387-10).

4-50. SERVICE HEADLIGHT ASSEMBLY REPLACEMENT

This task covers:

a. Removal **b. Installation**

INITIAL SETUP:

Tools
General mechanic's tool kit: automotive (Appendix B, Item 1)

Equipment Condition
- Battery ground cables disconnected (para. 4-68).
- Hood raised and secured (TM 9-2320-387-10).

Manual References
TM 9-2320-387-10
TM 9-2320-387-24P

Maintenance Level
Unit

NOTE

- Prior to removal, tag leads for installation.
- Note position of circuit 91 for installation.

a. Removal

1. Remove three nuts (4) and washers (5) from headlight assembly (1) and hood (6).
2. Remove leads 17 (2), 18 (3), and 91 (7) from headlight assembly (1).
3. Remove headlight assembly (1) from hood (6).

b. Installation

NOTE

Circuit numbers are marked on headlight next to respective connectors.

1. Connect leads 17 (2), 18 (3), and 91 (7) to headlight assembly (1).
2. Install headlight assembly (1) on hood (6) with three washers (5) and nuts (4).

4-50. SERVICE HEADLIGHT ASSEMBLY REPLACEMENT (Cont'd)

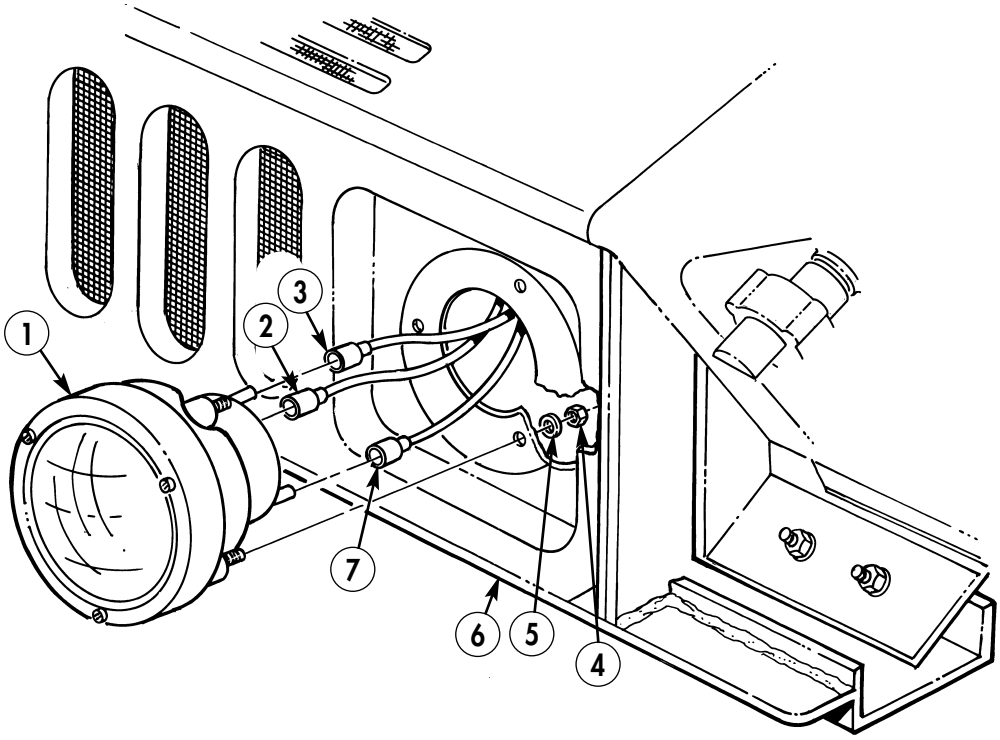

FOLLOW-ON TASKS:
- Connect battery ground cables (para. 4-68).
- Lower and secure hood (TM 9-2320-387-10).
- Check adjustment of headlight lamp (para. 4-49).

4-51. BLACKOUT DRIVE LIGHT ASSEMBLY REPLACEMENT

This task covers:

a. Removal **b. Installation**

INITIAL SETUP:

Tools

General mechanic's tool kit:
automotive (Appendix B, Item 1)
Maintenance and repair shop equipment:
automotive (Appendix B, Item 2)

Materials/Parts

Lockwasher (Appendix G, Item 144)
Four nut and lockwasher assemblies
(Appendix G, Item 195)

Manual References

TM 9-2320-387-10
TM 9-2320-387-24P

Equipment Condition

- Battery ground cables disconnected (para. 4-68).
- Hood raised and secured (TM 9-2320-387-10).

Maintenance Level

Unit

a. Removal

1. Remove nut (5), lockwasher (6), and special washer (7) from blackout drive light (1) and hood (9). Discard lockwasher (6).
2. Disconnect lead 198 (4) from blackout drive light (1).
3. Remove blackout drive light (1) and coned mounting washer (3) from swivel bracket (11).
4. Disconnect lead 92C (2) from blackout drive light (1).
5. Remove four nut and lockwasher assemblies (8), swivel bracket (11), and plate (10) from hood (9). Discard nut and lockwasher assemblies (8).

b. Installation

1. Install swivel bracket (11) on outside of hood (9), and plate (10) to inside of hood (9) with four nut and lockwasher assemblies (8). Tighten nut and lockwasher assemblies (8) to 16-30 lb-in. (2-3 N·m).
2. Connect lead 92C (2) to blackout drive light (1).
3. Place coned mounting washer (3) and blackout drive light (1) through hole in swivel bracket (11).
4. Connect lead 198 (4) to blackout drive light (1).
5. Install blackout drive light (1) on hood (9) with special washer (7), lockwasher (6), and nut (5).

4-51. BLACKOUT DRIVE LIGHT ASSEMBLY REPLACEMENT (Cont'd)

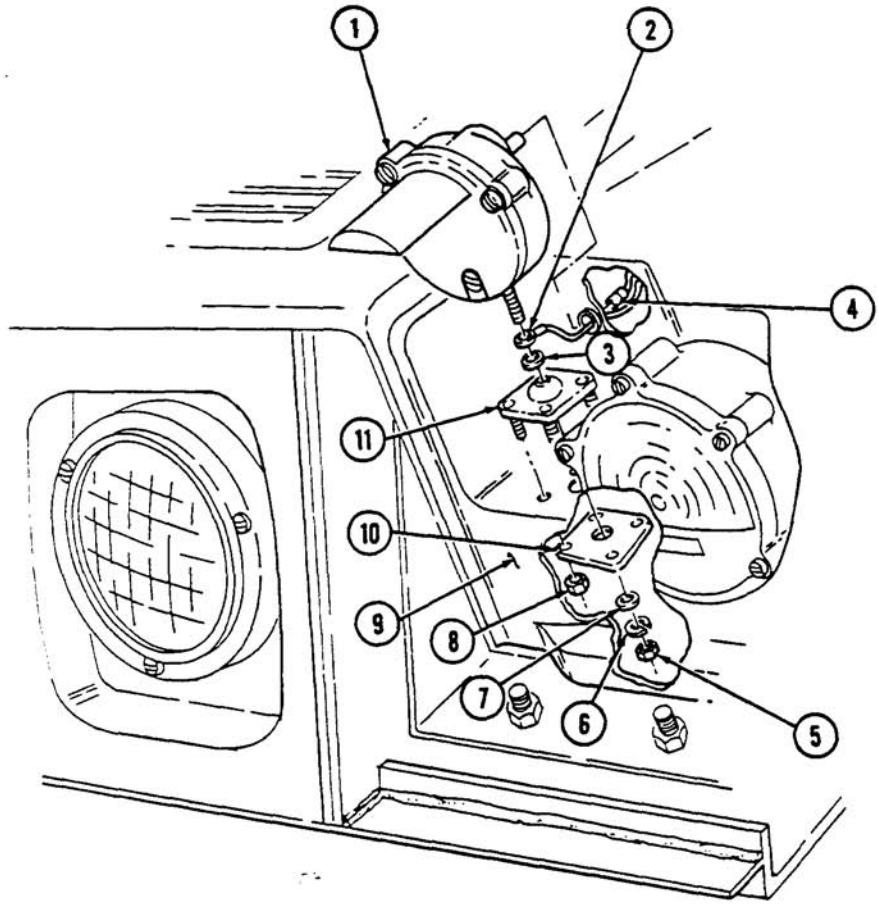

FOLLOW-ON TASKS:
- Connect battery ground cables (para. 4-68).
- Lower and secure hood (TM 9-2320-387-10).
- Check blackout drive light for proper operation (TM 9-2320-387-10).

4-52. BLACKOUT DRIVE LIGHT LAMP REPLACEMENT

This task covers:

a. Removal **b. Installation**

INITIAL SETUP:

Tools
General mechanic's tool kit:
automotive (Appendix B, Item 1)

Materials/Parts
Gasket (Appendix G, Item 38)
Adhesive (Appendix C, Item 12)
Three gaskets (Appendix G, Item 43)

Manual References
TM 9-2320-387-10
TM 9-2320-387-24P

Equipment Condition
Battery ground cables disconnected (para. 4-68).

Maintenance Level
Unit

a. Removal

1. Loosen three retaining screws (2) on light door (6) and remove light door (6), gasket (3), and three gaskets (5.1) from light body (5). Discard gasket (3) and gaskets (5.1).
2. Remove lamp (4) from light body (5).
3. Clean adhesive from mating surfaces of light door (6) and light body (5).

b. Installation

1. Install lamp (4) on light body (5).
2. Install three gaskets (5.1), gasket (3), and light door (6) on light body (5) with lens hood (1) at top.

NOTE

To prevent moisture from entering light assembly, tighten all screws evenly.

3. Secure light door (6) by tightening three screws (2).
4. Apply thin coat of adhesive to seam between light body (5) and light door (6).

4-52. BLACKOUT DRIVE LIGHT LAMP REPLACEMENT (Cont'd)

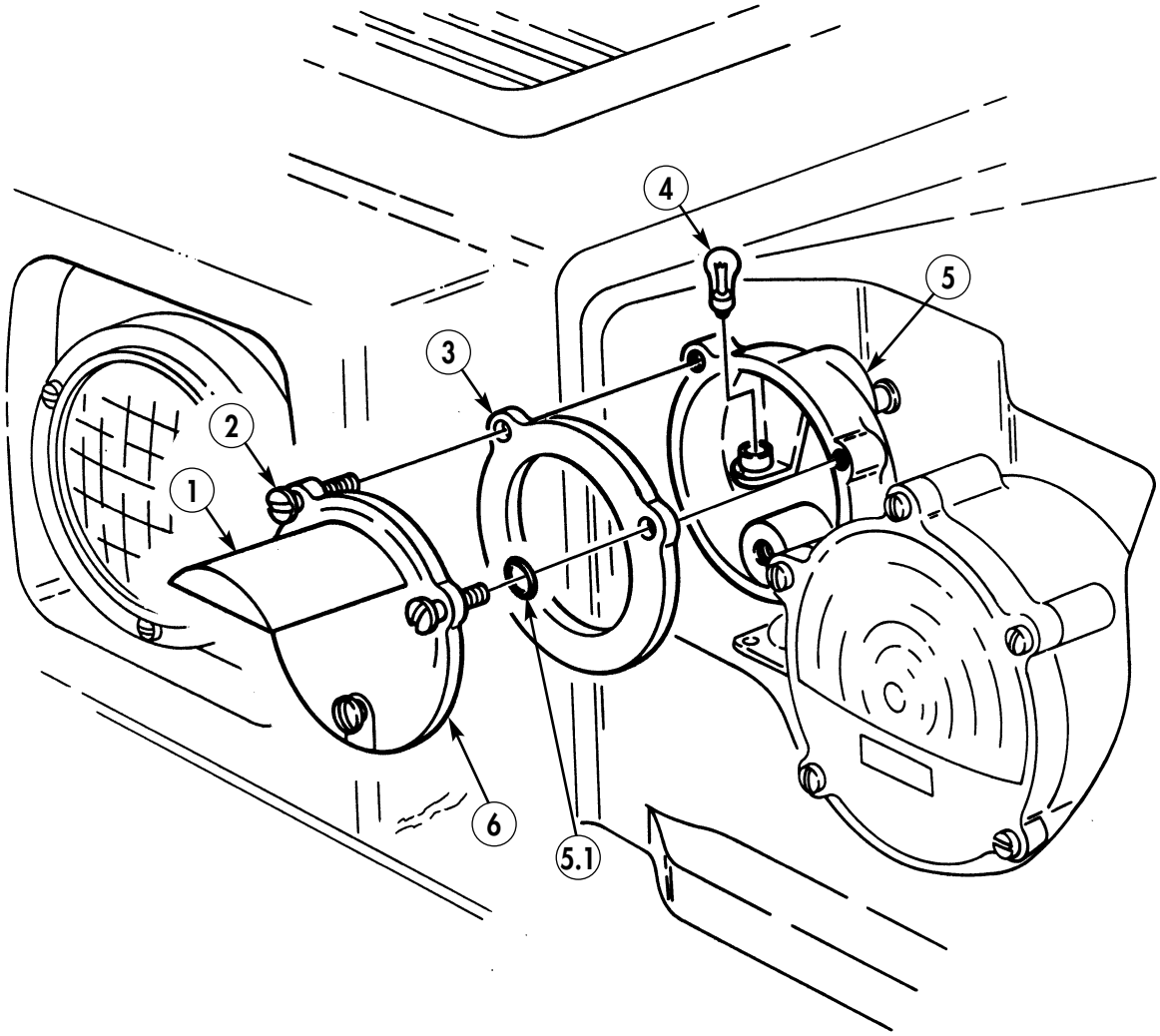

FOLLOW-ON TASKS:
- Connect battery ground cables (para. 4-68).
- Check blackout drive light for proper operation (TM 9-2320-387-10).

4-53. FRONT COMPOSITE LIGHT ASSEMBLY REPLACEMENT

This task covers:

a. Removal **b. Installation**

INITIAL SETUP:

Tools
General mechanic's tool kit: automotive (Appendix B, Item 1)

Equipment Condition
- Battery ground cables disconnected (para. 4-68).
- Hood raised and secured (TM 9-2320-387-10).

Manual References
TM 9-2320-387-10
TM 9-2320-387-24P

Maintenance Level
Unit

NOTE

- Replacement procedures for right and left front composite light assemblies are basically the same, except left side has four screws securing closeoff cover and right side has three screws. This procedure covers the left front composite light.
- Prior to removal, tag leads for installation.

a. Removal

1. Remove four screws (1), washers (2), and closeoff cover (3) from hood (4).
2. Disconnect leads 20 (5), 461 (12), and 491 (11) from hood wiring harness (6).
3. Remove two capscrews (9), washers (8), ground 92 (7), buss bar (10), and composite light (13) from hood (4).

b. Installation

1. Install composite light (13), buss bar (10), and ground 92 (7) on hood (4) with two washers (8) and capscrews (9).
2. Connect leads 20 (5), 461 (12), and 491 (11) to hood wiring harness (6).
3. Install closeoff cover (3) on hood (4) with four washers (2) and screws (1).

4-53. FRONT COMPOSITE LIGHT ASSEMBLY REPLACEMENT (Cont'd)

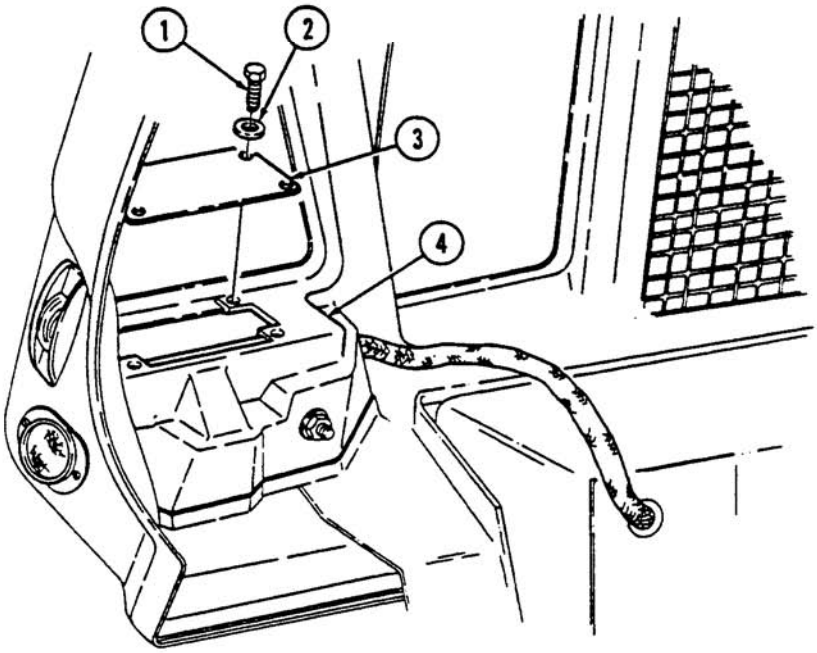

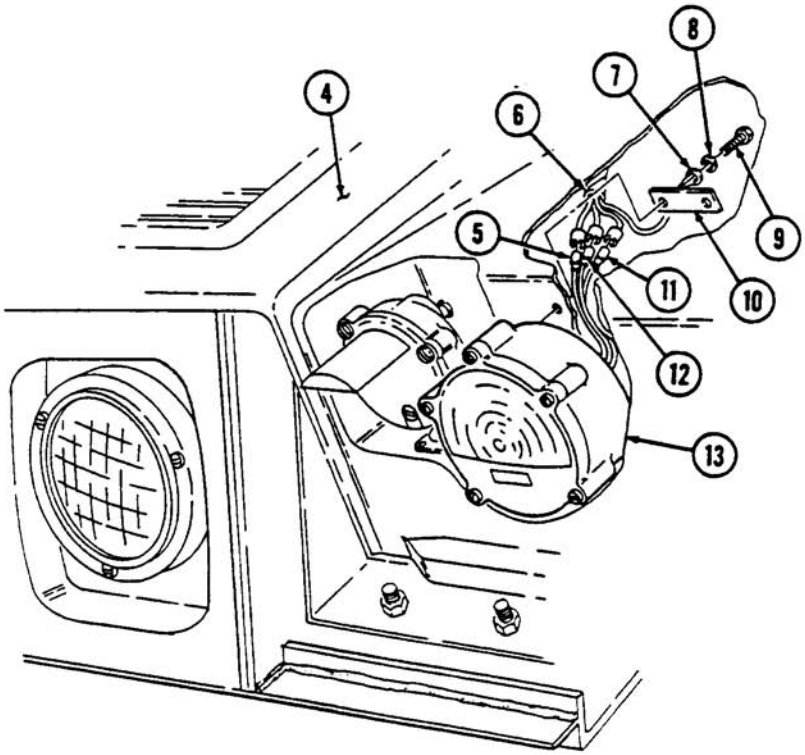

FOLLOW-ON TASKS:
- Connect battery ground cables (para. 4-68).
- Lower and secure hood (TM 9-2320-387-10).
- Check front composite light for proper operation (TM 9-2320-387-10).

4-54. FRONT COMPOSITE LIGHT LAMP REPLACEMENT

This task covers:

a. Removal **b. Installation**

INITIAL SETUP:

Tools
General mechanic's tool kit:
automotive (Appendix B, Item 1)

Materials/Parts
O-ring (Appendix G, Item 226)
Adhesive (Appendix C, Item 12)

Manual References
TM 9-2320-387-10
TM 9-2320-387-24P

Equipment Condition
Battery ground cables disconnected (para. 4-68).

Maintenance Level
Unit

a. Removal

1. Loosen five retaining screws (1) and remove light door (2) and O-ring (4) from light body (5). Discard O-ring (4).
2. Remove lamps (3), (6), and (7) from light body (5).
3. Clean adhesive from mating surfaces of light door (2) and light body (5).

b. Installation

1. Install lamps (3), (6), and (7) on light body (5).

NOTE

To prevent moisture from entering light assembly, tighten all screws evenly.

2. Install O-ring (4) and light door (2) on light body (5) with five retaining screws (1).
3. Apply thin coat of adhesive to seam between light body (5) and light door (2).

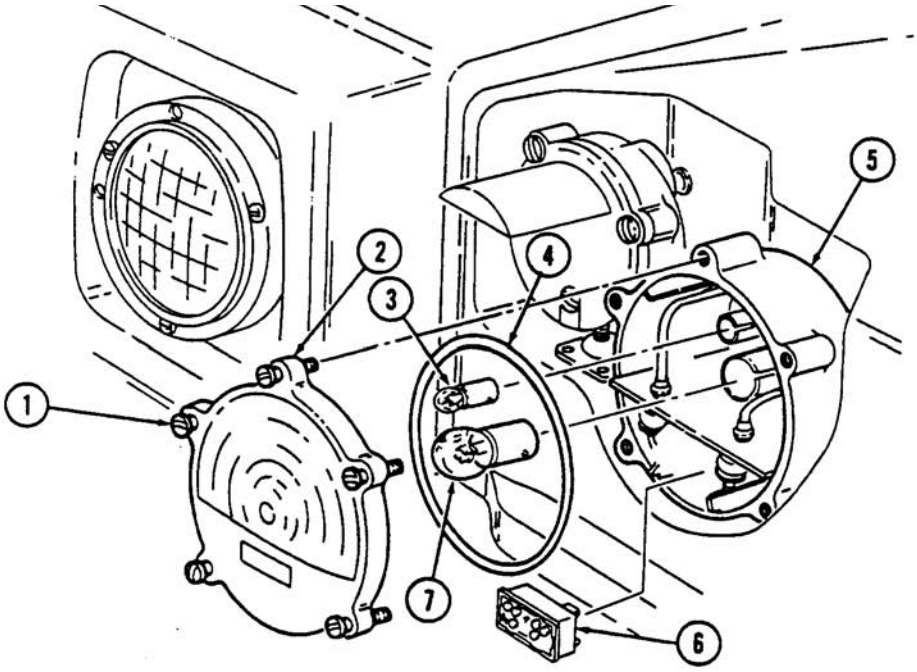

FOLLOW-ON TASKS:
- Connect battery ground cables (para. 4-68).
- Check front composite light for proper operation (TM 9-2320-387-10).

4-55. REAR COMPOSITE LIGHT LAMP REPLACEMENT

This task covers:

a. Removal **b. Installation**

INITIAL SETUP:

Tools
General mechanic's tool kit:
automotive (Appendix B, Item 1)

Materials/Parts
O-ring (Appendix G, Item 227)
Adhesive (Appendix C, Item 12)

Manual References
TM 9-2320-387-10
TM 9-2320-387-24P

Equipment Condition
Battery ground cables disconnected (para. 4-68).

Maintenance Level
Unit

a. Removal

1. Loosen six retaining screws (4) and remove composite light door (5) and O-ring (6) from composite light (1). Discard O-ring (6).
2. Remove lamps (2), (3), (7), and (8) from composite light (1).
3. Clean adhesive from mating surfaces of light door (5) and composite light (1).

b. Installation

1. Install lamps (2), (3), (7), and (8) on composite light (1).

NOTE

To prevent moisture from entering light assembly, tighten all screws evenly.

2. Install O-ring (6) and composite light door (5) on composite light (1) and tighten six screws (4).
3. Apply a thin coat of adhesive to seam between composite light (1) and composite light door (5).

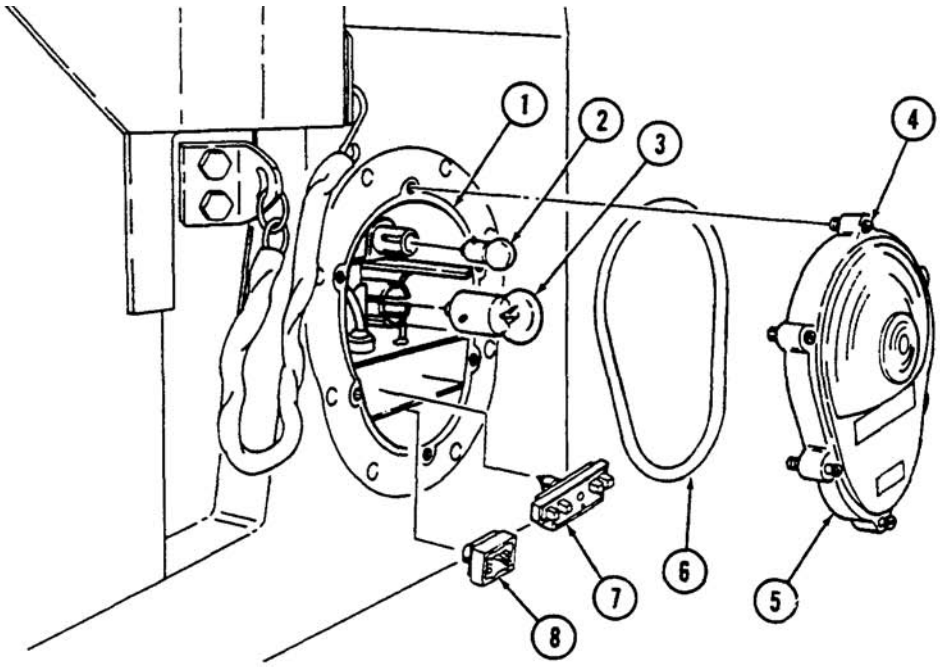

FOLLOW-ON TASKS: • Connect battery ground cables (para. 4-68).
• Check rear composite light for proper operation (TM 9-2320-387-10).

4-56. SIDE MARKER LIGHT ASSEMBLY REPLACEMENT

This task covers:

a. Removal **b. Installation**

INITIAL SETUP:

Tools

General mechanic's tool kit: automotive (Appendix B, Item 1)

Materials/Parts

Four locknuts (Appendix G, Item 95) (front only)

Manual References

TM 9-2320-387-10
TM 9-2320-387-24P

Equipment Condition

- Battery ground cables disconnected (para. 4-68).
- Hood raised and secured (front side marker only) (TM 9-2320-387-10).

Maintenance Level

Unit

NOTE

Replacement procedures for front and rear side marker light assemblies are basically the same. Front marker lights have locknuts; rear marker lights have plain nuts. This procedure covers the left front side marker.

a. Removal

1. Remove four screws (1), washers (2), and closeoff cover (3) from hood (4).
2. Disconnect lead 489 (15) from hood wiring harness (14).
3. Remove two screws (13), lens (11), and door (12) from side marker light (9).
4. Remove four locknuts (5), washers (6), ground lead 92 (7), screws (10), side marker light (9), and gasket (8) from hood (4). Discard locknuts (5).

b. Installation

1. Install gasket (8), side marker light (9), and ground lead 92 (7) on hood (4) with four screws (10), washers (6), and locknuts (5), ensuring ground lead 92 (7) is under washer (6).
2. Install lens (11) and door (12) on side marker light (9) with two screws (13).
3. Connect lead 489 (15) to hood wiring harness (14).
4. Install closeoff cover (3) on hood (4) with four washers (2) and screws (1).

4-56. SIDE MARKER LIGHT ASSEMBLY REPLACEMENT (Cont'd)

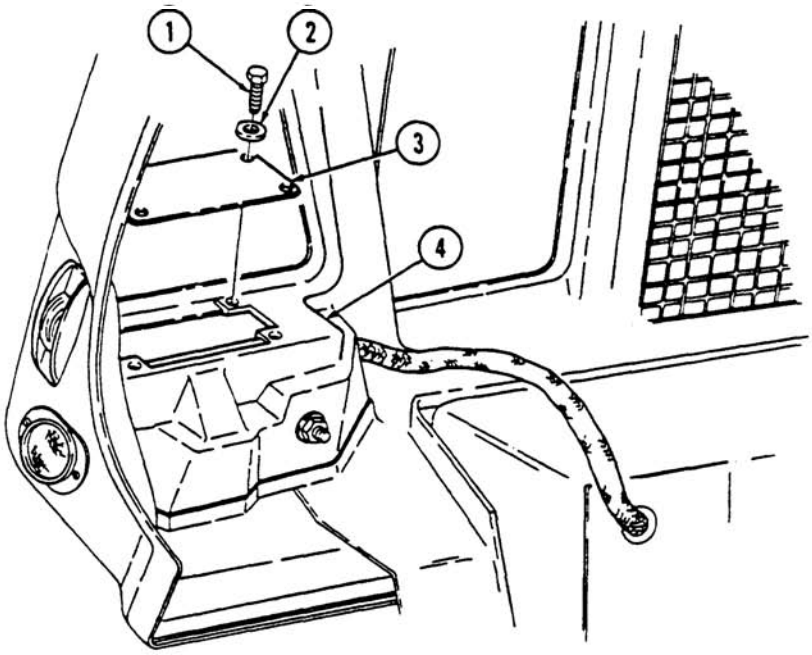

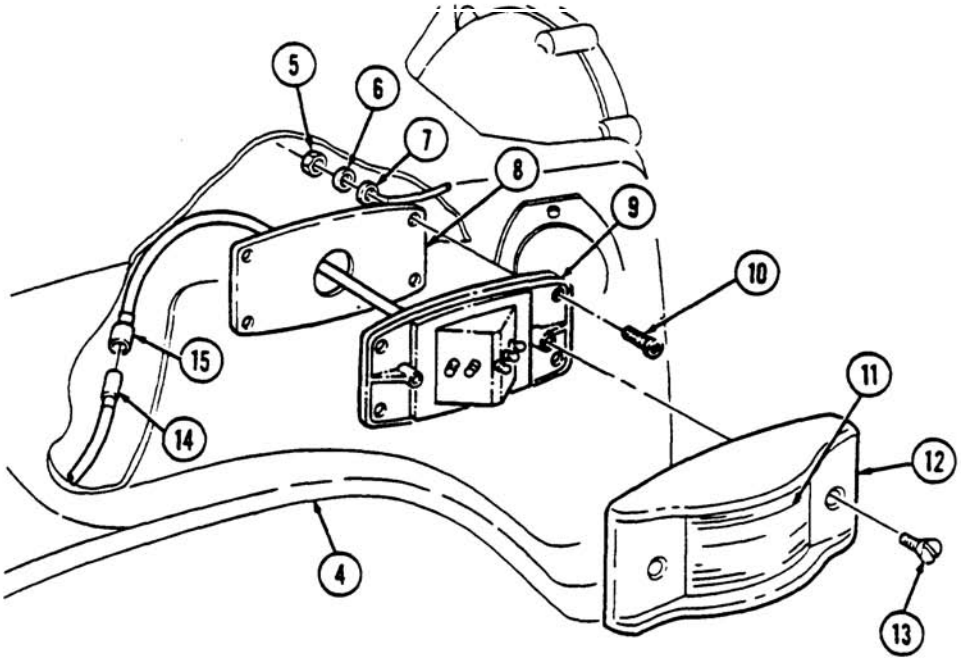

FOLLOW-ON TASKS:
- Connect battery ground cables (para. 4-68).
- Lower and secure hood (front side marker only) (TM 9-2320-387-10).
- Check side marker light for proper operation (TM 9-2320-387-10).

4-57. REAR COMPOSITE LIGHT ASSEMBLY REPLACEMENT

This task covers:

a. Removal **b. Installation**

INITIAL SETUP:

Tools
General mechanic's tool kit:
automotive (Appendix B, Item 1)

Materials/Parts
Two lockwashers (Appendix G, Item 146)
Nut and lockwasher assembly
(Appendix G, Item 197)

Manual References
TM 9-2320-387-10
TM 9-2320-387-24P

Equipment Condition
Battery ground cables disconnected (para. 4-68).

Maintenance Level
Unit

NOTE

Prior to removal, tag leads for installation.

a. Removal

1. Remove two capscrews (3), washers (4), ground lead 95B (5), and ground strap (6) from housing (17).
2. Remove two capscrews (15) and lockwashers (16) and pull shield (1) away from D-beam (14). Discard lockwashers (16).
3. Remove nut and lockwasher assembly (12), screw (2), and clamp (11) from shield (1). Discard nut and lockwasher assembly (12).
4. Disconnect leads 21 (7), 23 (8), 24 (9), and 22-461 (10) from body harness (13).
5. Remove composite light (18) from housing (17).

b. Installation

1. Install composite light (18) on housing (17).
2. Connect leads 21 (7), 23 (8), 24 (9), and 22-461 (10) to body harness (13).
3. Install clamp (11) on shield (1) with screw (2) and nut and lockwasher assembly (12).
4. Install shield (1) on D-beam (14) with two lockwashers (16) and capscrews (15).
5. Install ground strap (6) and ground lead 95B (5) on housing (17) with two washers (4) and capscrews (3).

4-57. REAR COMPOSITE LIGHT ASSEMBLY REPLACEMENT (Cont'd)

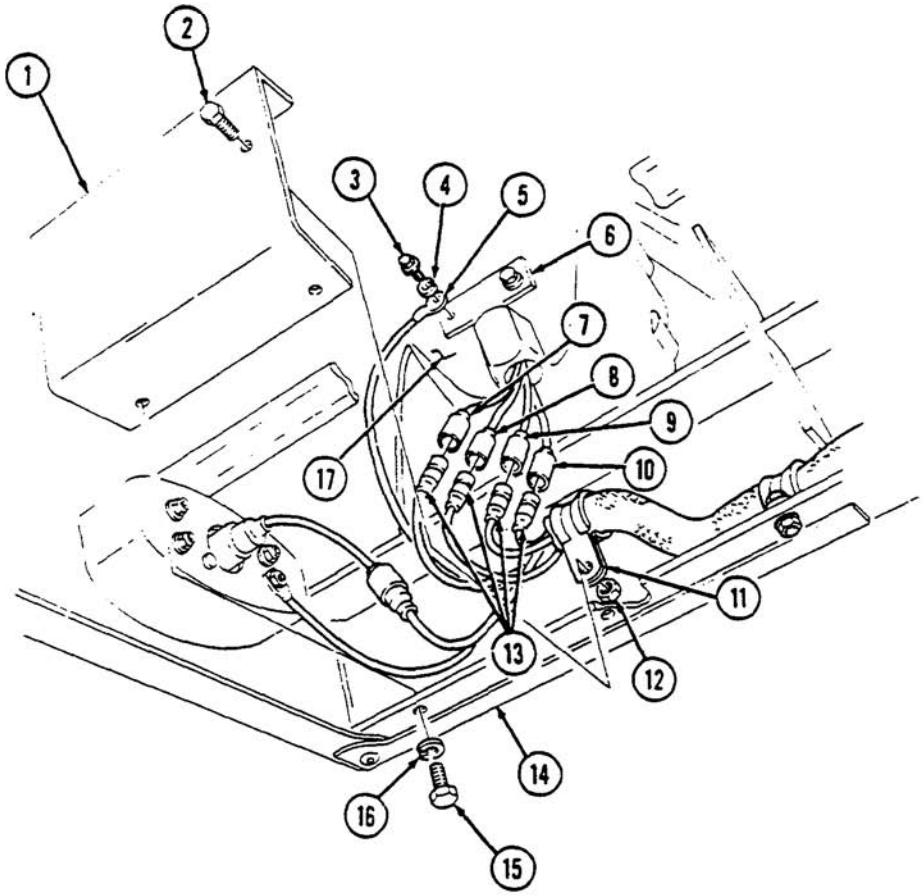

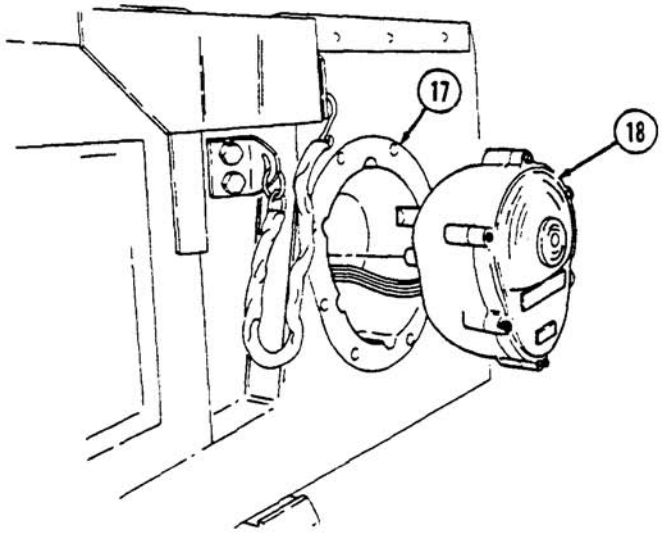

FOLLOW-ON TASKS:
- Connect battery ground cables (para. 4-68).
- Check rear composite light for proper operation (TM 9-2320-387-10).

4-58. MAIN LIGHT SWITCH REPLACEMENT

This task covers:

a. Removal **b. Installation**

INITIAL SETUP:

Tools
General mechanic's tool kit: automotive (Appendix B, Item 1)

Materials/Parts
Lockwasher (Appendix G, Item 147)

Manual References
TM 9-2320-387-10
TM 9-2320-387-24P

Equipment Condition
Battery ground cables disconnected (para. 4-68).

Maintenance Level
Unit

a. Removal

1. Disconnect cannon plug (1) from main light switch (8).
2. Remove screw (6), lockwasher (5), single-position lever (4), and washer (7) from lever shaft (9) on switch (8). Discard lockwasher (5).

NOTE

Lower right lever must be raised to remove screw.

3. Remove four screws (3) from instrument panel (2) and switch (8).
4. Remove switch (8) from behind instrument panel (2).

b. Installation

NOTE

Lower right lever must be raised to install screw.

1. With lever shaft (9) at top of switch (8), install switch (8) on instrument panel (2) with four screws (3).
2. Install washer (7) and single position lever (4) on lever shaft (9) with lockwasher (5) and screw (6).
3. Connect cannon plug (1) to rear of switch (8).

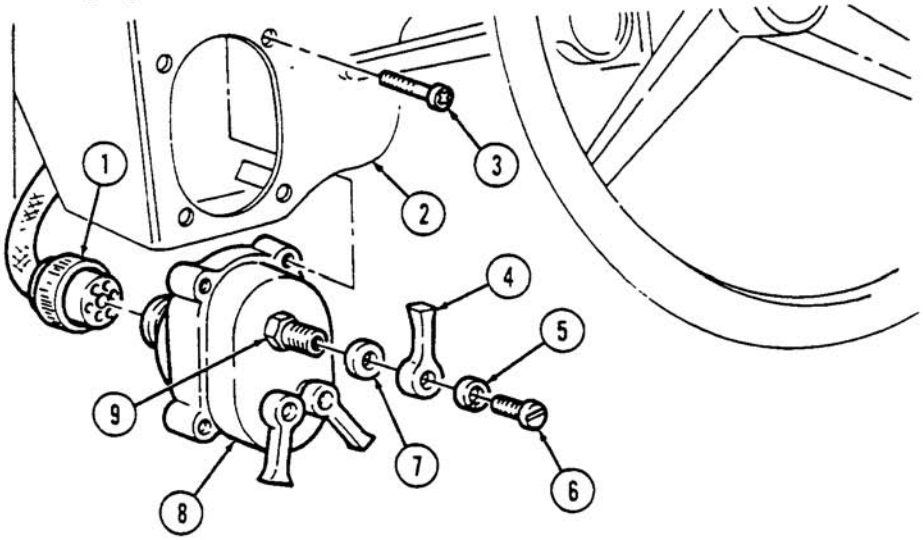

FOLLOW-ON TASKS:
- Connect battery ground cables (para. 4-68).
- Check main light switch for proper operation (TM 9-2320-387-10).

4-59. HEADLIGHT BEAM SELECTOR SWITCH AND BRACKET REPLACEMENT

This task covers:

a. Removal **b. Installation**

INITIAL SETUP:

Tools
General mechanic's tool kit:
automotive (Appendix B, Item 1)
Riveter tool kit (Appendix B, Item 123)

Materials/Parts
Three assembled washer screws
(Appendix G, Item 278.1)
Four rivets (Appendix G, Item 271.1)

Manual References
TM 9-2320-387-10
TM 9-2320-387-24P

Equipment Condition
Battery ground cables disconnected (para. 4-68).

Maintenance Level
Unit

a. Removal

NOTE

- Prior to removal, tag leads for installation.
- Pull back floor insulation for access to beam selector switch and bracket.

1. Remove three assembled washer screws (6), switch (3), and shield (5) from bracket (4). Discard assembled washer screws (6).
2. Disconnect leads 16A (2), 17A (1), and 18A (9) from switch (3).
3. Remove four rivets (7) and bracket (4) from floor (8).

b. Installation

1. Install bracket (4) on floor (8) with four rivets (7).
2. Connect leads 16A (2), 17A (1), and 18A (9) to switch (3).
3. Install switch (3) and shield (5) on bracket (4) with three assembled washer screws (6).

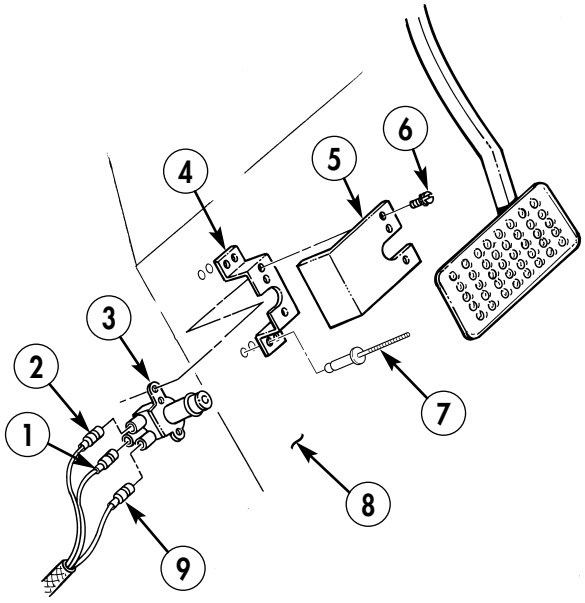

FOLLOW-ON TASKS:
- Connect battery ground cables (para. 4-68).
- Check headlight beam selection switch for proper operation (TM 9-2320-387-10).

4-60. STOPLIGHT/TORQUE CONVERTER CLUTCH BRAKE SWITCH MAINTENANCE

This task covers:

a. Removal
b. Installation
c. Adjustment

INITIAL SETUP:

Tools
General mechanic's tool kit: automotive (Appendix B, Item 1)

Test Equipment
Multimeter (Appendix B, Item 155)

Manual References
TM 9-2320-387-24P

Materials/Parts
Two assembled locknuts (Appendix G, Item 134)
Two pushnuts (Appendix G, Item 251)

Equipment Condition
Battery ground cables disconnected (para. 4-68).

Maintenance Level
Unit

NOTE

Prior to removal, tag leads for installation.

a. Removal

1. Disconnect leads 75A (1), 75B (16), and connector 810A/810B (15) from switch leads (2).
2. Remove two assembled locknuts (6), washers (4), capscrews (5), washers (4), and switch (3) from mounting bracket (7). Discard assembled locknuts (6).
3. Remove pushnut (14), stoplight switch arm (13), and washer (12) from actuating rod (11). Discard pushnut (14).
4. Remove pushnut (9), actuating rod (11), and washer (10) from brake pedal (8). Discard pushnut (9).

b. Installation

1. Install washer (10) and actuating rod (11) on bracket (8) with pushnut (9).
2. Install washer (12) and stoplight switch arm (13) on actuating rod (11) with pushnut (14).
3. Install switch (3) on mounting bracket (7) with two washers (4), capscrews (5), washers (4), and assembled locknuts (6).
4. Connect leads 75A (1), 75B (16), and connector 810A/810B (15) to switch leads (2).

c. Adjustment

1. Disconnect leads 75A (1), 75B (16), and connector 810A/810B (15) from switch leads (2) and connect multimeter to leads on switch (3) to check continuity. Multimeter should indicate open. Depress brake pedal; multimeter should indicate continuity within approximately 1/4 in. (6 mm) of pedal travel. If not, go to step 2.
2. Loosen two capscrews (5) to allow movement of switch (3).
3. Position switch (3) so that continuity is present when installed. Slide switch forward until no continuity (open) is indicated (approximately 1/4 in. (6 mm)).
4. Tighten two capscrews (5).
5. Connect leads 75A (1), 75B (16), and connector 810A/810B (15) to switch leads (2).
6. Connect battery ground cables (para. 4-68).
7. Turn selector lever to service drive; stoplights should not illuminate. Depress brake pedal; stoplights should illuminate within 1/4 in. (6 mm) of pedal travel.

4-60. STOPLIGHT/TORQUE CONVERTER CLUTCH BRAKE SWITCH MAINTENANCE (Cont'd)

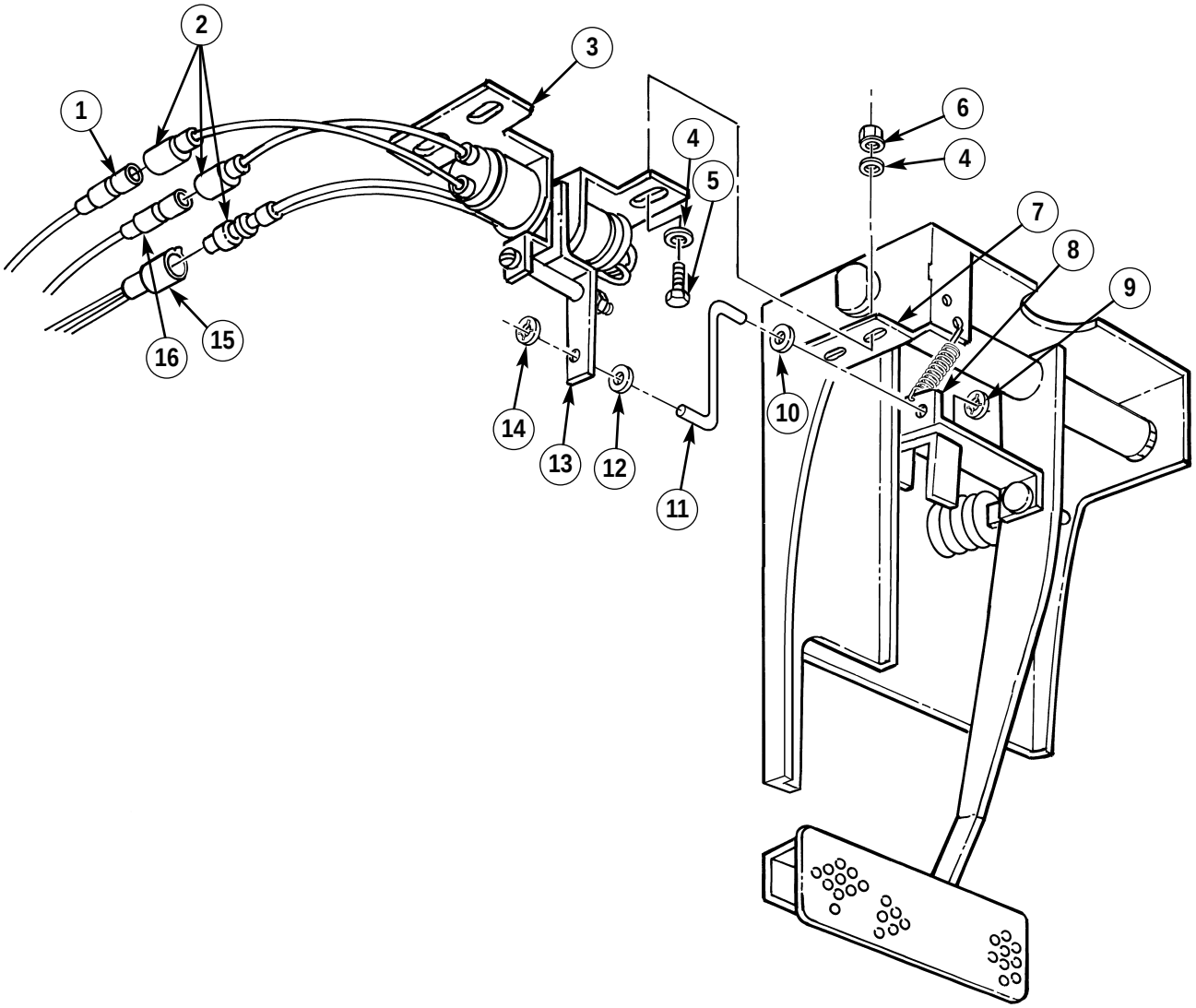

4-61. DIRECTIONAL SIGNAL FLASHER REPLACEMENT

This task covers:

a. Removal

b. Installation

INITIAL SETUP:

Tools
General mechanic's tool kit:
automotive (Appendix B, Item 1)

Materials/Parts
Sealing compound (Appendix C, Item 64)

Manual References
TM 9-2320-387-10
TM 9-2320-387-24P

Equipment Condition
Battery ground cables disconnected (para. 4-68).

Maintenance Level
Unit

NOTE

The flasher is located under the instrument panel to the left of the steering column.

a. Removal

1. Disconnect cannon plug (8) from main light switch (7).
2. Disconnect connector plug (6) from flasher (5).
3. Remove two nuts (4), washers (3), screws (1), and flasher (5) from cowl (2).

b. Installation

1. Install flasher (5) on cowl (2) with two screws (1), washers (3), and nuts (4).
2. Apply sealing compound to threads of connector plug (6) and connect connector plug (6) to flasher (5).
3. Connect cannon plug (8) to main light switch (7).

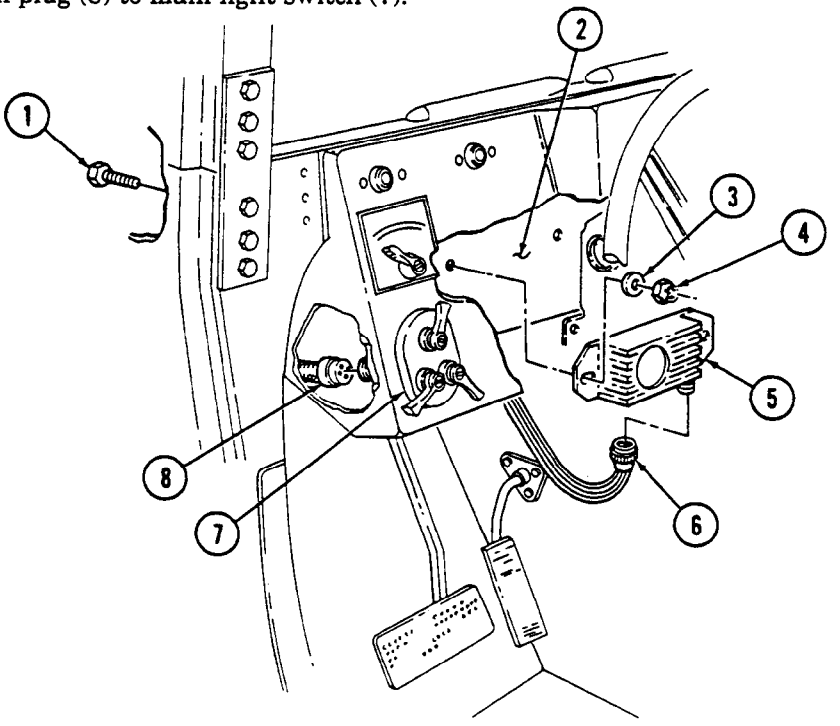

FOLLOW-ON TASKS:
- Connect battery ground cables (para. 4-68).
- Check directional signal flasher for proper operation (TM 9-2320-387-10).

4-62. DIRECTIONAL SIGNAL CONTROL INDICATOR LAMP REPLACEMENT

This task covers:

a. Removal

b. Installation

INITIAL SETUP:

Tools
General mechanic's tool kit: automotive (Appendix B, Item 1)

Manual References
TM 9-2320-387-10
TM 9-2320-387-24P

Equipment Condition
Battery ground cables disconnected (para. 4-68).

Maintenance Level
Unit

a. Removal

1. Push lever (1) to four-way flasher position (TM 9-2320-387-10).
2. Remove light lens (3) from directional control unit (4).
3. Remove lamp (2) from directional control unit (4).

b. Installation

1. Install lamp (2) in directional control unit (4).
2. Install light lens (3) in directional control unit (4).

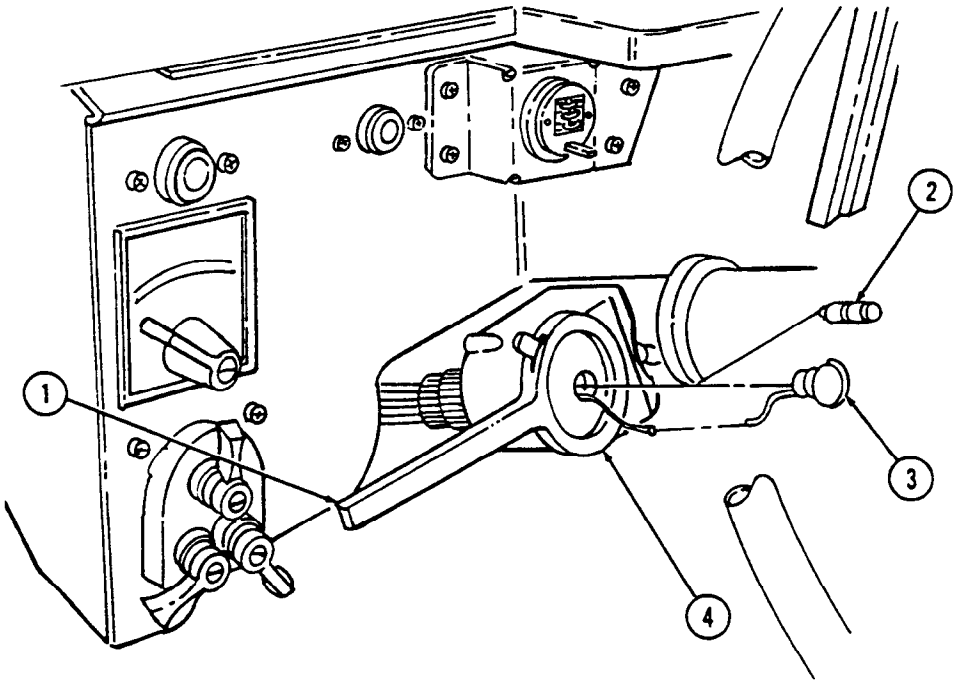

FOLLOW-ON TASKS:
- Connect battery ground cables (para. 4-68).
- Check directional signal control lamp for proper operation (TM 9-2320-387-10).

4-63. DIRECTIONAL SIGNAL CONTROL REPLACEMENT

This task covers:

a. Removal

b. Installation

INITIAL SETUP:

Tools
General mechanic's tool kit: automotive (Appendix B, Item 1)

Manual References
TM 9-2320-387-10
TM 9-2320-387-24P

Equipment Condition
Battery ground cables disconnected (para. 4-68).

Maintenance Level
Unit

a. Removal

1. Loosen connector nut (6) and remove connector plug (7) from directional signal control (4).
2. Remove four screws (2) and directional signal control (4) from bracket (1).

b. Installation

1. Place lever (5) to HAZARD position.
2. Install directional signal control (4) on bracket (1) with four screws (2). Do not tighten screws (2).
3. Rotate steering wheel, ensuring gauge post (3) mates with directional signal control (4), and tighten screws (2) to 22-26 (30-35 N•m).
4. Install connector plug (7) on directional signal control (4) and tighten connector nut (6).

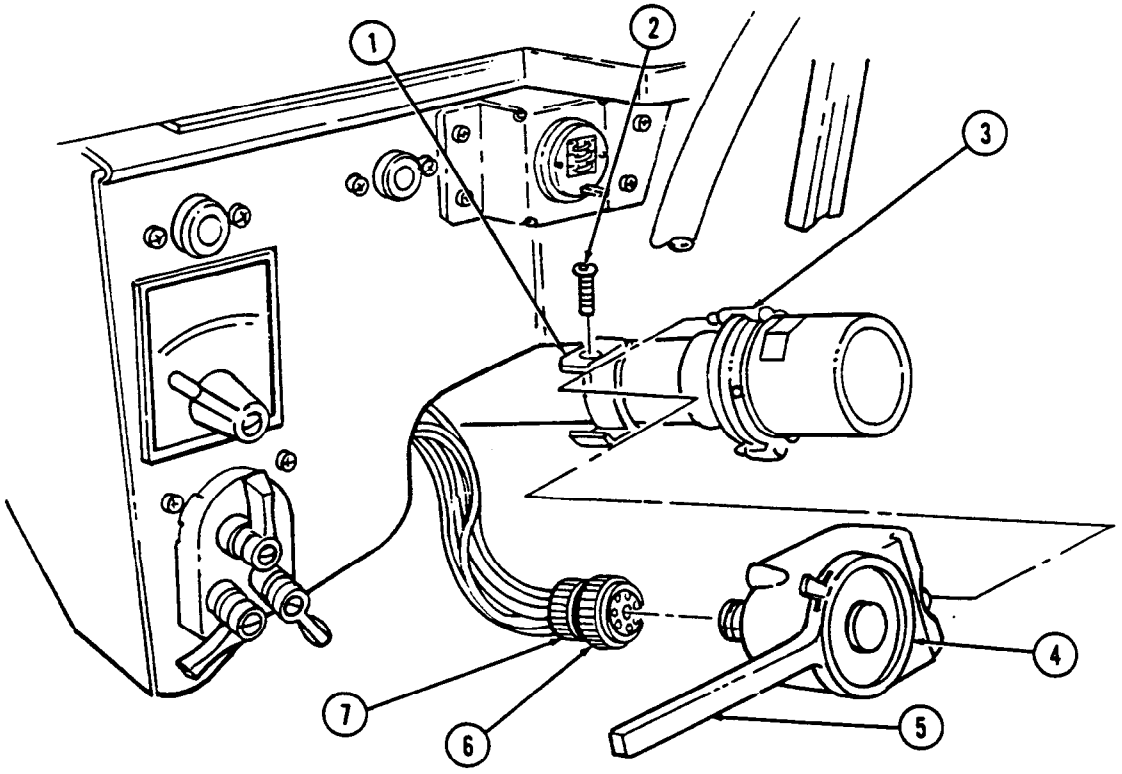

FOLLOW-ON TASKS:
- Connect battery ground cables (para. 4-68).
- Check directional signal control for proper operation (TM 9-2320-387-10).

4-64. DIRECTIONAL SIGNAL CONTROL CANCELLING RING REPLACEMENT

This task covers:

a. Removal **b. Installation**

INITIAL SETUP:

Tools
General mechanic's tool kit: automotive (Appendix B, Item 1)

Manual References
TM 9-2320-387-10
TM 9-2320-387-24P

General Safety Instructions
Failure to position cancelling pin in proper position may cause injury to personnel or damage to equipment.

Maintenance Level
Unit

a. Removal

Remove three screws (5) and cancelling ring (4) from steering wheel (6).

b. Installation

WARNING

Cancelling pin must be positioned 90° ± 5°. Ensure front wheels of vehicle point straight ahead. Failure to position pin properly could cause loss of steering, causing injury to personnel or damage to equipment.

1. Install cancelling ring (4) on steering wheel (6) with pin (2) 90° ± 5° from directional signal control (1).
2. Rotate steering wheel (6), ensuring pin (2) mates with directional signal control (1) and secure cancelling ring (4) on steering wheel (6) with three screws (5).

NOTE

Gauge posts found on a new cancelling ring are there to ensure proper installation only. Gauge posts must be removed after installation of cancelling ring to permit proper operation of directional signal control.

3. Cut gauge posts (3) off within 1/4 in. (6 mm) of base.

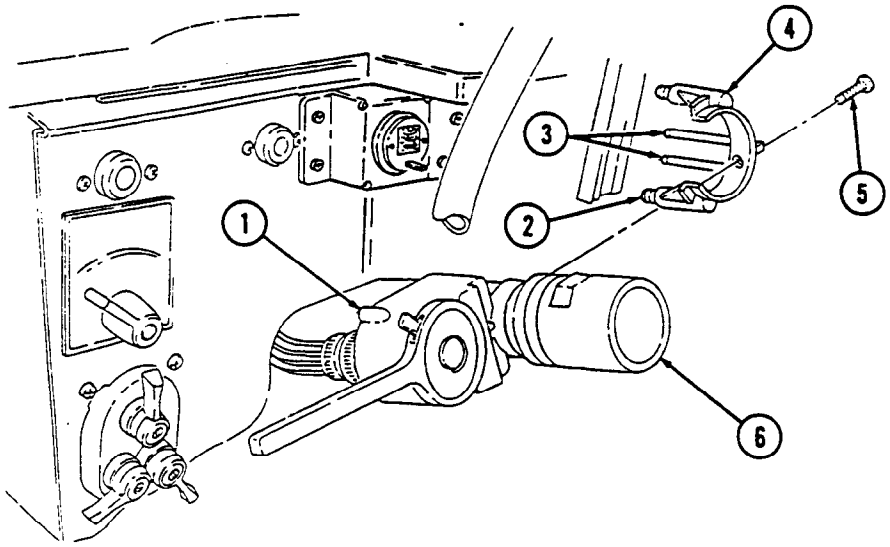

FOLLOW-ON TASK: Check directional signal control for proper operation (TM 9-2320-387-10).

4-65. SERVICE HEADLIGHT AND BLACKOUT DRIVE LIGHT ELECTRICAL CONNECTOR AND GROMMET REPLACEMENT

This task covers:

a. Removal

b. Installation

INITIAL SETUP:

Tools
General mechanic's tool kit: automotive (Appendix B, Item 1)

Manual References
TM 9-2320-387-24P

Equipment Condition
Service headlight lamp removed (para. 4-49).

Maintenance Level
Unit

NOTE

Replacement procedures for connector and grommet from service headlight and blackout drive light are basically the same. The following procedure covers the service headlight.

a. Removal

Remove connector (3) from grommet (1) and remove grommet (1) from headlight housing (2).

b. Installation

Install grommet (1) on headlight housing (2) and install connector (3) on grommet (1).

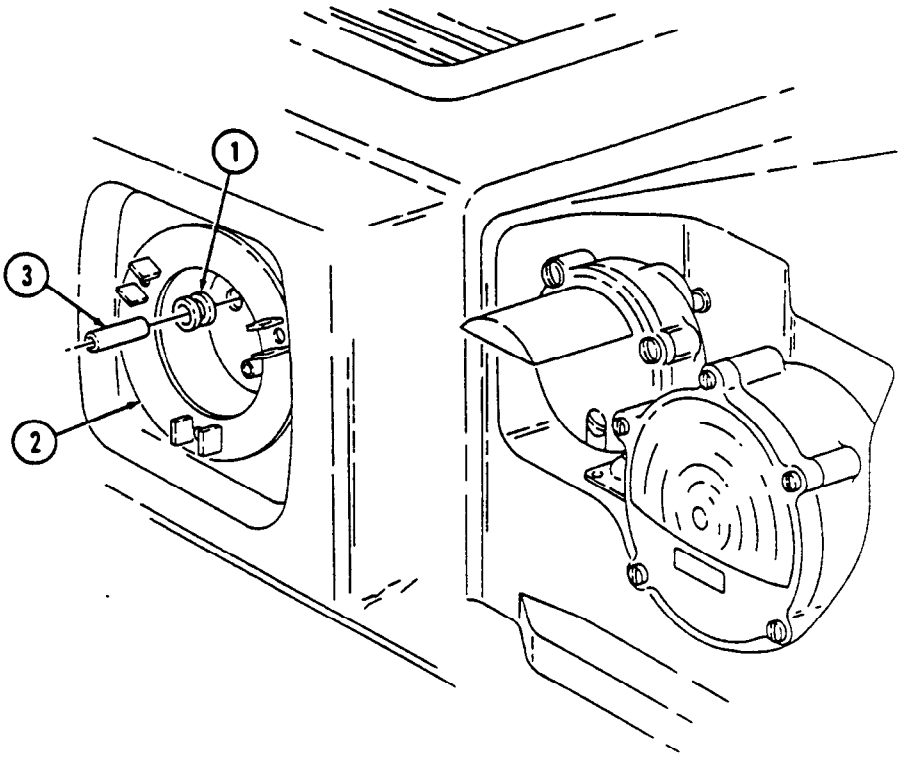

FOLLOW-ON TASK: Install service headlight lamp (para. 4-49).

Section VI. BATTERY SYSTEM MAINTENANCE

4-66. BATTERY SYSTEM MAINTENANCE TASK SUMMARY

TASK PARA.	PROCEDURES	PAGE NO.
4-67.	Battery Cable Terminal Clamp Replacement	4-108
4-68.	Battery Cable Maintenance	4-110
4-69.	Power Feed-Through Stud Replacement	4-116
4-70.	12-Volt Regulator Cable Replacement	4-118
4-71.	Buss Bar Replacement	4-121
4-72.	Starter Power Cables Replacement	4-122
4-73.	Battery Holddown Replacement	4-126
4-74.	Battery Replacement and Servicing	4-128
4-75.	Battery Tray Maintenance	4-130
4-76.	Slave Receptacle and Cable Maintenance	4-132
4-77.	Winch Power Cable Replacement	4-134
4-78.	Shunt Replacement	4-138
4-79.	Hood Jumper Wiring Harness Replacement	4-140
4-80.	Wiring Harness Connector Repair	4-146

4-67. BATTERY CABLE TERMINAL CLAMP REPLACEMENT

This task covers:

a. Removal

b. Installation

INITIAL SETUP:

Tools

General mechanic's tool kit: automotive (Appendix B, Item 1)

Materials/Parts

Lubricating oil (Appendix C, Item 46)

Manual References

TM 9-2320-387-24P

Equipment Condition

Battery box cover removed (para. 10-43).

General Safety Instructions

- Wear safety goggles and rubber gloves and do not smoke when performing battery maintenance.
- Remove all jewelry.
- When removing battery cable clamps, disconnect ground cables first.

Maintenance Level

Unit

WARNING

- Battery acid (electrolyte) is extremely harmful. Always wear safety goggles and rubber gloves, and do not smoke when performing battery maintenance. Severe injury will result if acid contacts eyes or skin.
- Remove all jewelry such as rings, dog tags, bracelets, etc. If jewelry or disconnected battery ground cable contact battery terminal, a direct short can result, causing instant heating of tools, severe injury to personnel, or damage to equipment.
- When removing battery cable clamps, disconnect both ground cables first. Do not allow tools to come in contact with vehicle when disconnecting cable clamps. A direct short can result, causing instant heating of tools, tool damage, battery damage, or battery explosion.

NOTE

The replacement procedure for all four battery cable terminal clamps is basically the same. This procedure covers one battery cable terminal clamp.

a. Removal

1. Remove cap (4) from battery terminal boot (8).
2. Clean lubricating oil from battery terminal boot (8).
3. Loosen screw (6) and nut (7) and remove terminal clamp (3) from terminal post (9).
4. Remove screw (2) and nut (5) from cable (1) and terminal clamp (3).
5. Remove cable (1) from terminal clamp (3) and battery terminal boot (8).
6. Remove terminal clamp (3) from battery terminal boot (8).

b. Installation

1. Push battery terminal boot (8) onto cable (1).
2. Place terminal clamp (3) into battery terminal boot (8) and install cable (1) on terminal clamp (3) with screw (2) and nut (5).
3. Apply lubricating oil to battery post pad (10). Do not allow lubricating oil to coat terminal post (9).
4. Secure terminal clamp (3) to terminal post (9) by tightening screw (6) and nut (7).
5. Apply lubricating oil to terminal clamp (3).
6. Install cap (4) on battery terminal boot (8).

4-67. BATTERY CABLE TERMINAL CLAMP REPLACEMENT (Cont'd)

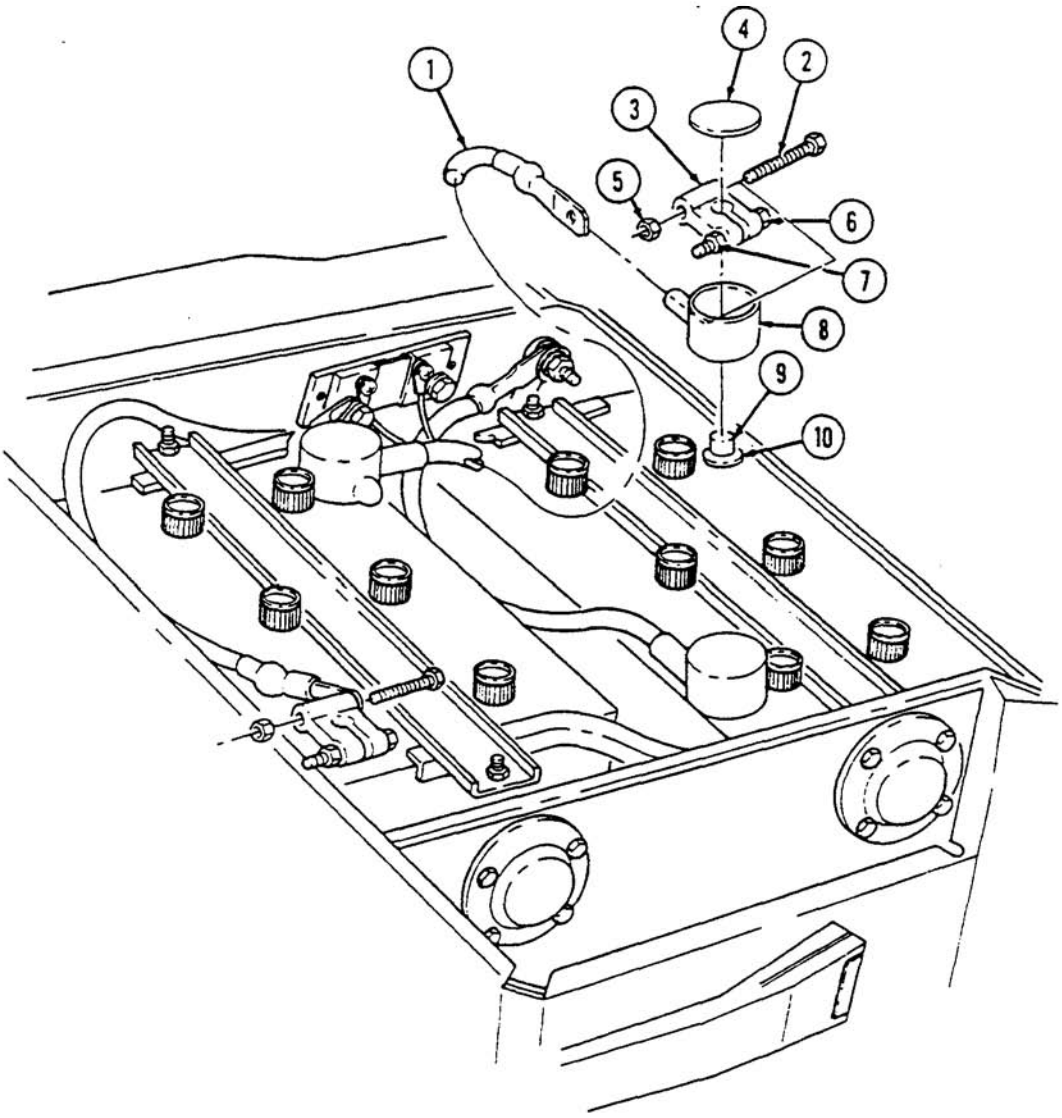

FOLLOW-ON TASK: Install battery box cover (para. 10-43).

4-68. BATTERY CABLE MAINTENANCE

This task covers:

a. Cleaning and Inspection
b. Ground Cables Disconnection
c. Ground Cables Reconnection
d. Ground Cable Removal
e. Ground Cable Installation
f. Interconnecting Cable Removal
g. Interconnecting Cable Installation
h. Positive Cable Removal
i. Positive Cable Installation

INITIAL SETUP:

Tools

General mechanic's tool kit:
automotive (Appendix B, Item 1)

Materials/Parts

Two lockwashers (Appendix G, Item 153)
Sodium bicarbonate (Appendix C, Item 76)
Lubricating oil (Appendix C, Item 46)
Sealing compound (Appendix C, Item 64)

Manual References

TM 9-2320-387-24P

Equipment Condition

Battery box cover removed (para. 10-43).

General Safety Instructions

- Wear safety goggles and rubber gloves and do not smoke when performing battery maintenance.
- Remove all jewelry.
- When removing battery cables, disconnect ground cables first. Ensure all switches are in OFF position before disconnecting.

Maintenance Level

Unit

WARNING

- Battery acid (electrolyte) is extremely harmful. Always wear safety goggles and rubber gloves, and do not smoke when performing battery maintenance. Severe injury will result if acid contacts eyes or skin.
- Remove all jewelry such as rings, dog tags, bracelets, etc. If jewelry or disconnected battery ground cable contact battery terminal, a direct short can result, causing instant heating of tools, severe injury to personnel, or damage to equipment.
- When removing battery cable clamps, disconnect both ground cables first. Ensure all switches are in OFF position before disconnecting. Do not allow tools to come in contact with vehicle when disconnecting cable clamps. A direct short can result, causing instant heating of tools, severe injury to personnel or damage to equipment.

NOTE

- If performing transmission diagnostics, record fault codes stored in TCM before disconnecting battery cables.
- When battery cables are disconnected, all stored fault codes in TCM will be lost.
- Secure all cables to head side of mounting capscrews.
- Use this procedure for disconnecting all battery cables.

a. Cleaning and Inspection

1. Inspect cables (1), (2), and (11) for corrosion and cracks.
2. Remove defective cables (1), (2), and (11), or clean with wire brush and sodium bicarbonate solution.

4-68. BATTERY CABLE MAINTENANCE (Cont'd)

b. Ground Cables Disconnection

1. Remove nut (12), screw (14), and cable (1) from terminal clamp (13).
2. Remove cap (5) from battery terminal boot (8).
3. Clean lubricating oil from battery terminal boot (8).
4. Loosen nut (7) and remove terminal clamp (4) from terminal (9).
5. Remove nut (3) and screw (6) from cable (2) and terminal clamp (4).
6. Remove cable (2) from terminal clamp (4) and battery terminal boot (8).

c. Ground Cables Reconnection

1. Push battery terminal boot (8) onto cable (2) and secure cable (2) to terminal clamp (4) with screw (6) and nut (3).
2. Apply a 1/16-in. (1.6-mm) bead of lubricating oil to battery post pad (10). Do not allow oil to coat terminal post (9).
3. Install terminal clamp (4) on terminal (9) and tighten nut (7).
4. Fill battery terminal boot (8) with lubricating oil.
5. Install cap (5) on battery terminal boot (8).
6. Install cable (1) on terminal clamp (13) with screw (14) and nut (12).

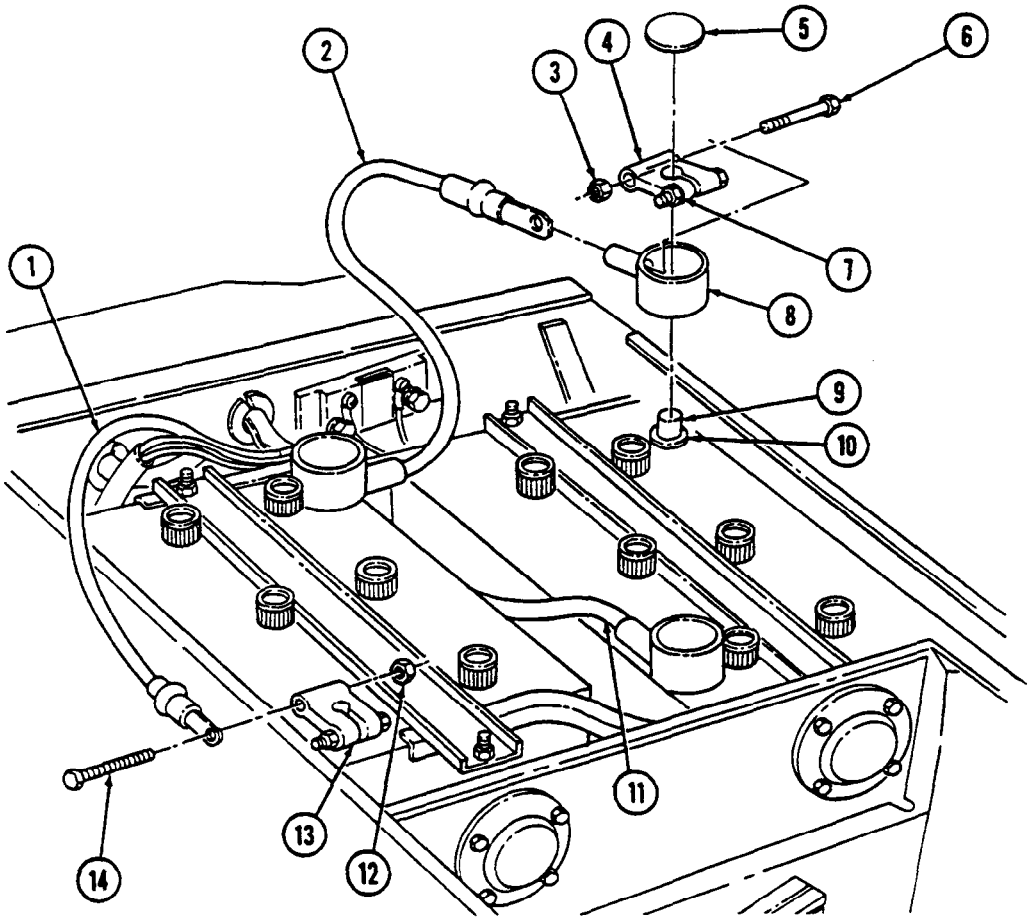

4-68 . BATTERY CABLE MAINTENANCE (Cont'd)

d. Ground Cable Removal

Remove screw (2), lockwasher (6), ground cable (5), and slave cable (4) from shunt (1) and battery box (3). Discard lockwasher (6).

e. Ground Cable Installation

Install slave cable (4) and ground cable (5) on shunt (1) and battery box (3) with lockwasher (6) and screw (2).

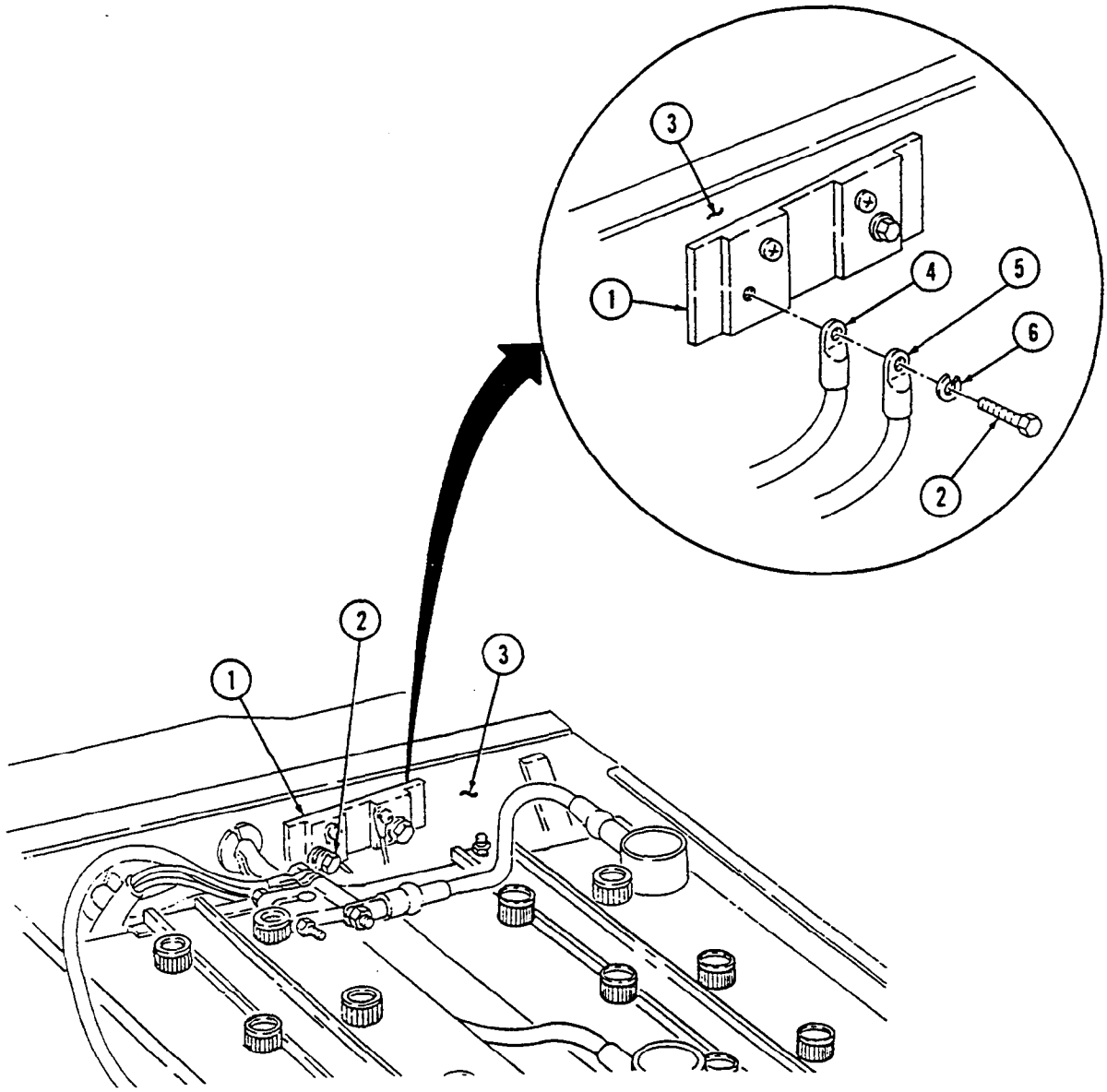

4-68. BATTERY CABLE MAINTENANCE (Cont'd)

f. Interconnecting Cable Removal

1. Remove caps (10) and (17) from battery terminal boots (20).
2. Clean lubricating oil from battery terminal boots (20).
3. Loosen nut (19) and remove terminal clamp (16) from battery post (21).
4. Remove nut (15), cable (14), and screw (18) from terminal clamp (16).
5. Remove battery terminal boot (20) from terminal clamp (16).
6. Loosen nut (27) and remove terminal clamp (13) from battery post (25).
7. Remove nut (11) and clamp (12) from holddown rod (23).
8. Remove nut (26), screw (8), cable (14), lead (9), and cable (7) from terminal clamp (13).

g. Interconnecting Cable Installation

1. Push battery terminal boot (20) onto cable (14) and install cable (14) on terminal clamp (16) with screw (18) and nut (15).
2. Install clamp (12) on holddown rod (23) with nut (11).
3. Apply a 1/16-in. (1.6-mm) bead of lubricating oil to battery post pads (22) and (24). Do not allow oil to coat terminal posts (21) and (25).
4. Install battery terminal clamp (16) on battery post (21) and tighten nut (19).
5. Push terminal boot (20) onto cable (7) and install cable (7), lead (9), and cable (14) on battery terminal clamp (13) with screw (8) and nut (26).
6. Install battery terminal clamp (13) on battery post (25) and tighten nut (27).
7. Fill battery terminal boots (20) with lubricating oil.
8. Install caps (10) and (17) on battery terminal boots (20).

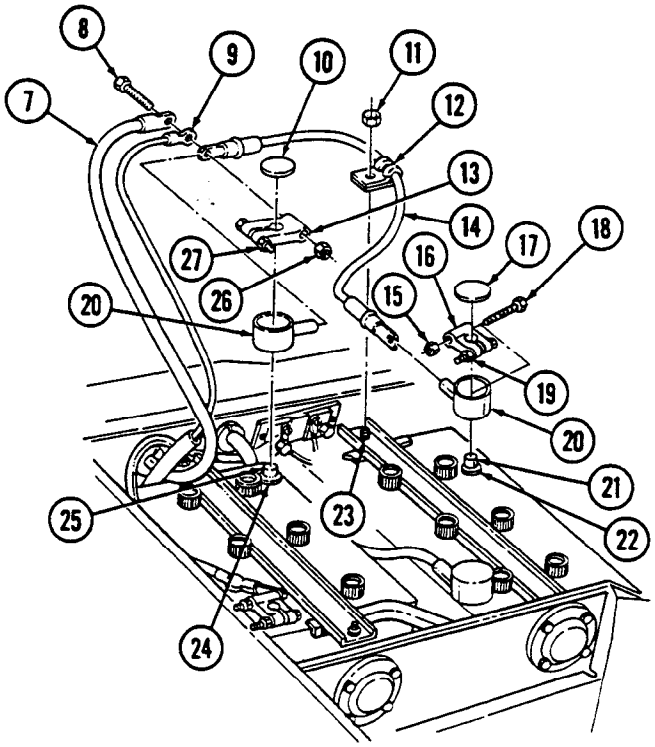

4-68. BATTERY CABLE MAINTENANCE (Cont'd)

h. Positive Cable Removal

1. Disconnect ground cable (task b.).
2. Remove cap (8) from battery terminal boot (11).
3. Clean lubricating oil from battery terminal boot (11).
4. Loosen nut (10) and remove terminal clamp (7) from terminal post (12).
5. Remove screw (6), nut (9), and positive cable (2) from terminal clamp (7) and battery terminal boot (11).
6. Remove nut (5), lockwasher (4), washer (3), and battery positive cable (2) from buss bar (1). Discard

i. Positive Cable Installation

1. Install battery positive cable (2) on buss bar (1) with washer (3), lockwasher (4), and nut (5). Apply silicone compound on cable (2), coating all exposed metallic surfaces.
2. Push battery terminal boot (11) onto positive cable (2) and install cable (2) on terminal clamp (7) with screw (6) and nut (9).
3. Apply a 1/16-in. (1.6-mm) bead of lubricating oil to battery post pad (13). Do not allow oil to coat terminal post (12).
4. Install terminal clamp (7) on terminal post (12) and tighten nut (10).
5. Fill battery terminal boot (11) with lubricating oil.
6. Install cap (8) on terminal boot (11).
7. Connect battery ground cable (task c.).

4-68. BATTERY CABLE MAINTENANCE (Cont'd)

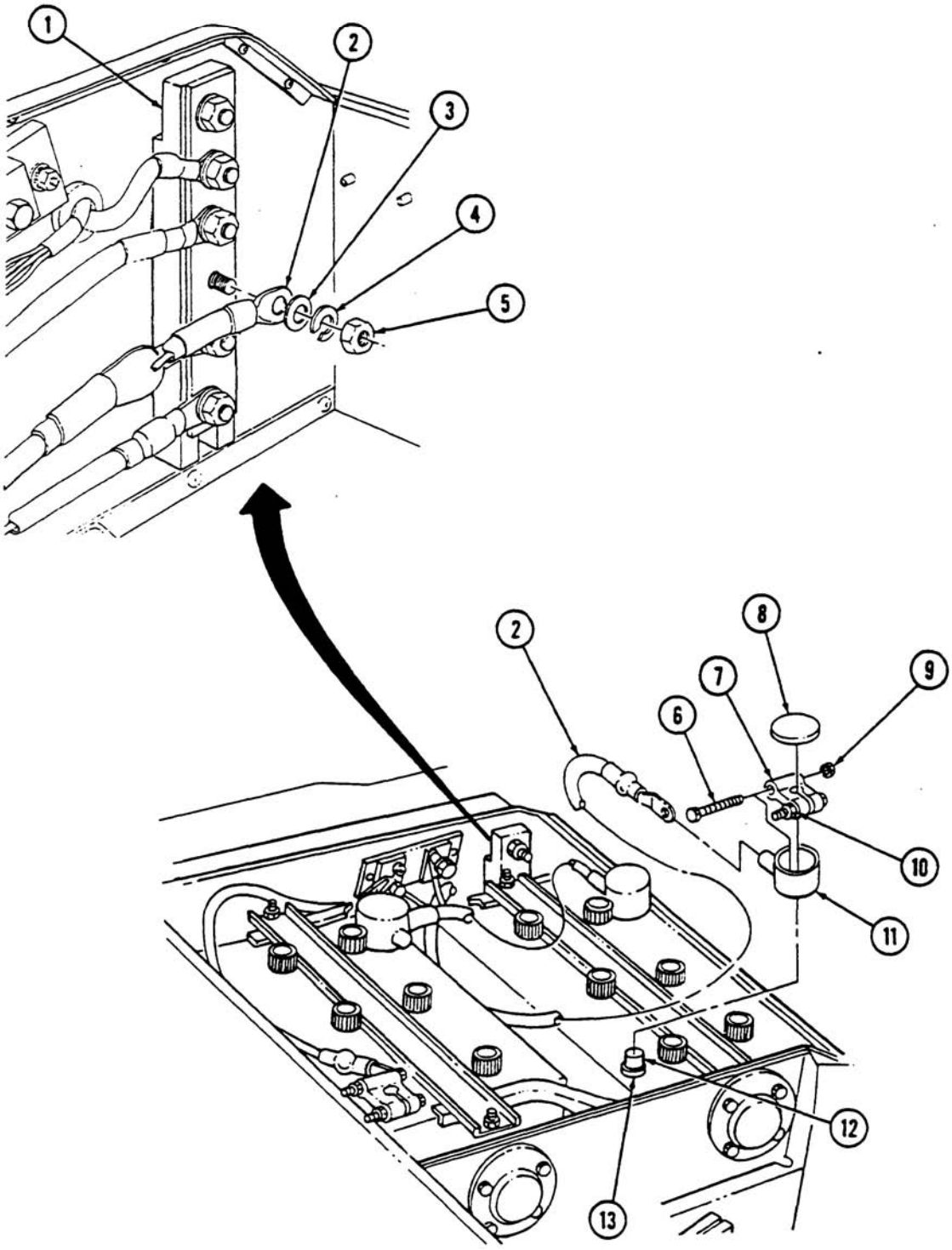

FOLLOW-ON TASK: Install battery box cover (para. 10-43).

4-69. POWER FEED-THROUGH STUD REPLACEMENT

This task covers:

a. Removal **b. Installation**

INITIAL SETUP:

Tools
General mechanic's tool kit: automotive (Appendix B, Item 1)
Maintenance and repair shop equipment: automotive (Appendix B, Item 2)

Materials/Parts
Lockwasher (Appendix G, Item 167)
Sealing compound (Appendix C, Item 64)

Manual References
TM 9-2320-387-24P

Equipment Condition
Buss bar removed (para. 4-71).

Maintenance Level
Unit

a. Removal

1. Slide rubber boot (5) from power feed-through stud (9) and remove nut (1), lockwasher (2), washer (3), lead 6B/6C (4), and starter cable (6) from feed-through stud (9). Discard lockwasher (2).
2. Remove nut (7) and feed-through stud (9) from battery box (8).

b. Installation

1. Install power feed-through stud (9) on battery box (8) with nut (7).
2. Install starter cable (6) and lead 6B/6C (4) on feed-through stud (9) with washer (3), lockwasher (2), and nut (1). Tighten nut (1) to 18-22 lb-ft (24-30 N·m).
3. Apply sealing compound to feed-through stud (9), starter cable (6), and lead 6B/6C (4), coating all exposed metallic surfaces.
4. Slide rubber boot (5) over feed-through stud (9).

4-69. POWER FEED-THROUGH STUD REPLACEMENT (Cont'd)

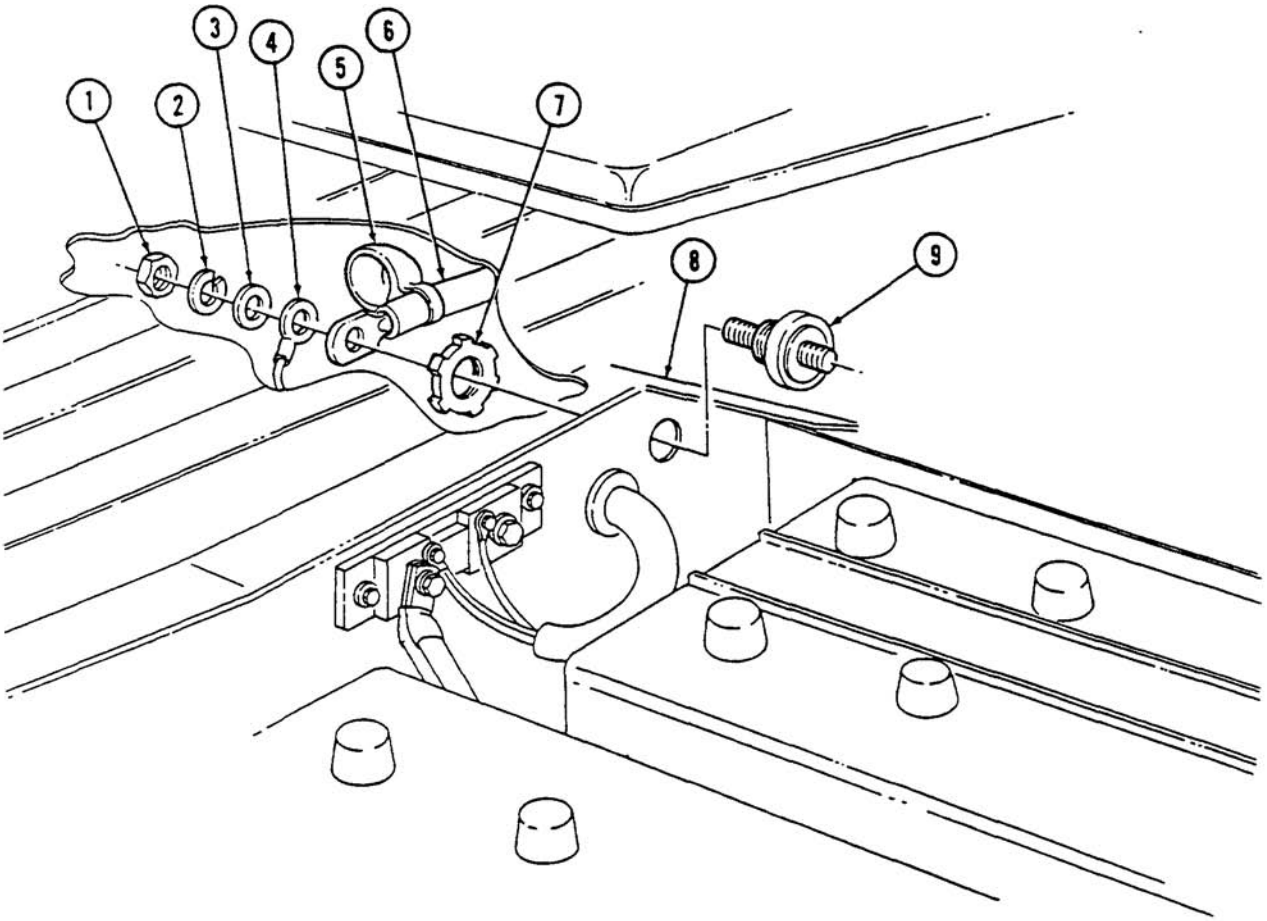

FOLLOW-ON TASK: Install buss bar (para. 4-71).

4-70. 12-VOLT REGULATOR CABLE REPLACEMENT

This task covers:

a. Removal **b. Installation**

INITIAL SETUP:

Tools

General mechanic's tool kit:
automotive (Appendix B, Item 1)
Maintenance and repair shop equipment:
automotive (Appendix B, Item 2)

Materials/Parts

Four tiedown straps (Appendix G, Item 326)
Lockwasher (Appendix G, Item 185)
Lubricating oil (Appendix C, Item 46)

Manual References

TM 9-2320-387-10
TM 9-2320-387-24P

Equipment Condition

- Battery ground cables disconnected (para. 4-68).
- Hood raised and secured (TM 9-2320-387-10).
- Engine access cover removed (para. 10-22).

Maintenance Level

Unit

NOTE

Prior to removal, tag leads for installation.

a. Removal

1. Slide back rubber boot (3) and remove nut (1), washer (2), and cable (4) from regulator (5).
2. Remove four tiedown straps (10) from cable (4). Discard tiedown straps (10).
3. Remove nut (7), lockwasher (8), clamp (9), and cable (4) from stud (6). Discard lockwasher (8).
4. Remove screw (11), clamp (13), and cable (4) from bracket (14).
5. Remove cap (23) from battery terminal boot (22).
6. Clean lubricating oil from battery terminal boot (22).
7. Remove nut (20), screw (17), cable (4), lead (18), and cable (19) from terminal clamp (21). Remove cable (4) from battery box (24).

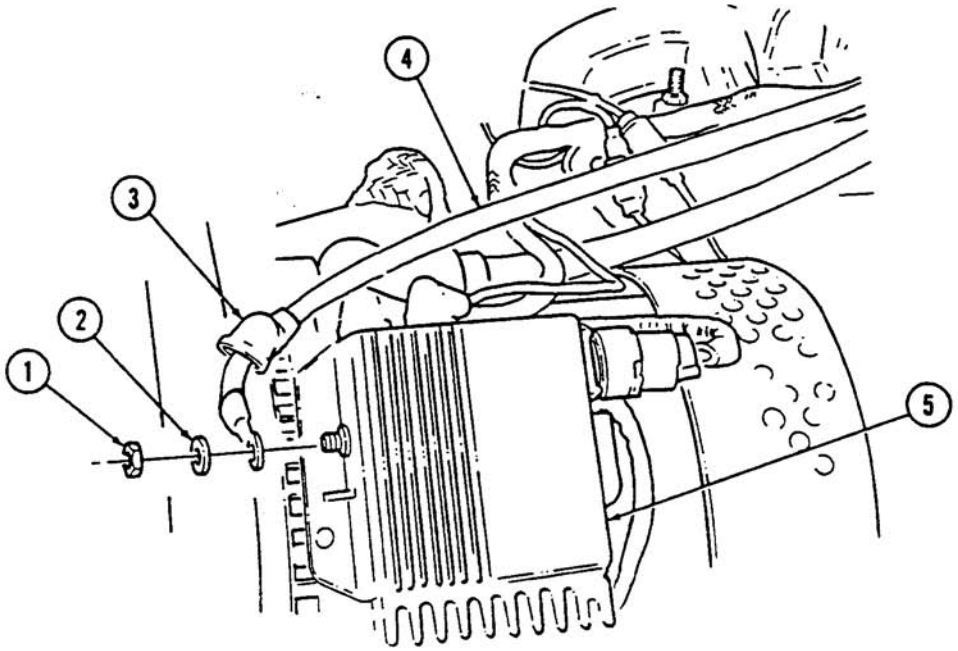

4-70. 12-VOLT REGULATOR CABLE REPLACEMENT (Cont'd)

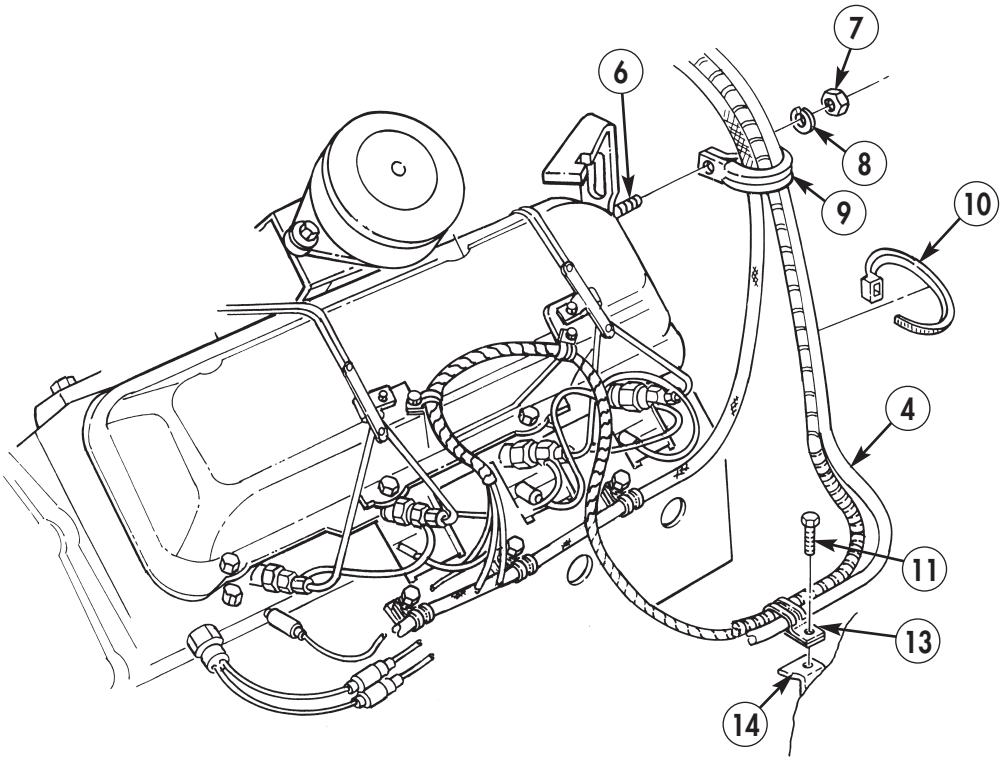

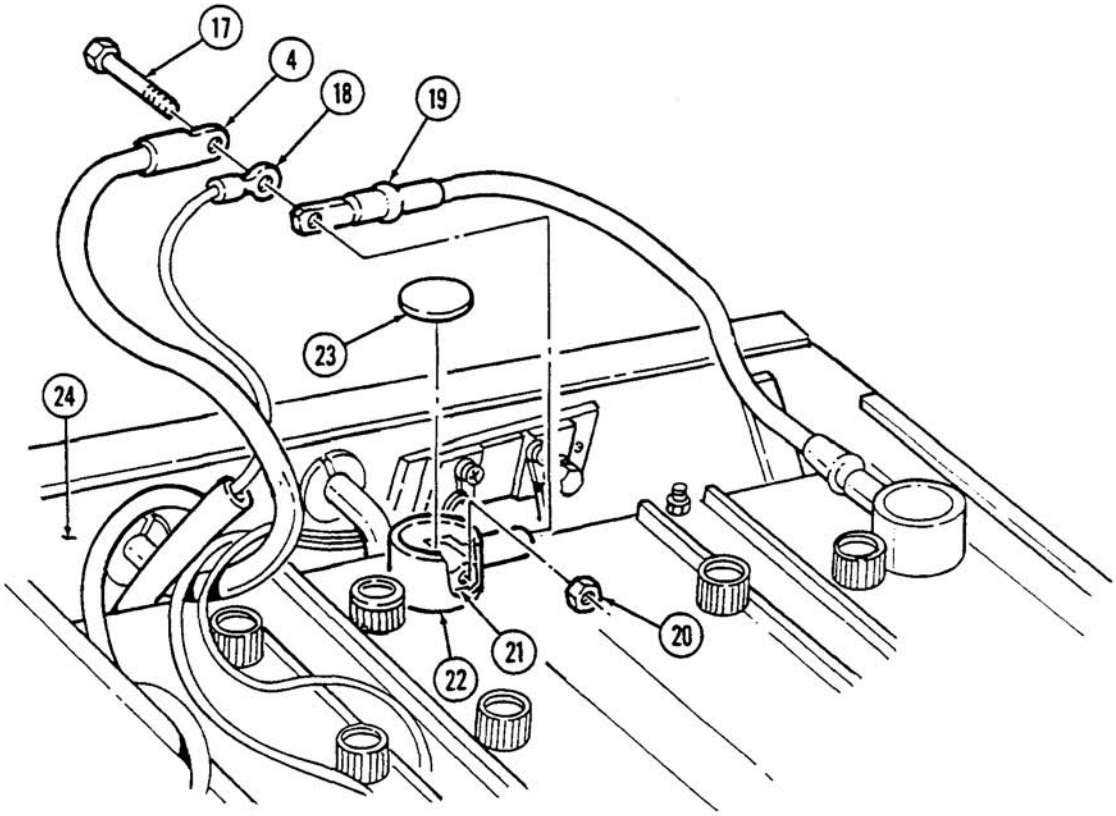

4-70. 12-VOLT REGULATOR CABLE REPLACEMENT (Cont'd)

b. Installation

1. Position cable (4) in approximate mounting location on stud (6) and through hole in battery box (24).
2. Install cable (19), lead (18), and cable (4) on terminal clamp (21) with screw (17) and nut (20).
3. Fill battery terminal boot (22) with lubricating oil.
4. Install cap (23) on terminal boot (22).
5. Install cable (4) and clamp (13) on bracket (14) with screw (11).
6. Install clamp (9) and cable (4) on stud (6) with lockwasher (8) and nut (7).
7. Install cable (4) on regulator (5) with washer (2) and nut (1). Tighten nut (1) to 18-22 lb-in. (2.0-2.5 N·m). Slide rubber boot (3) over nut (1).
8. Install four tiedown straps (10) on cable (4).

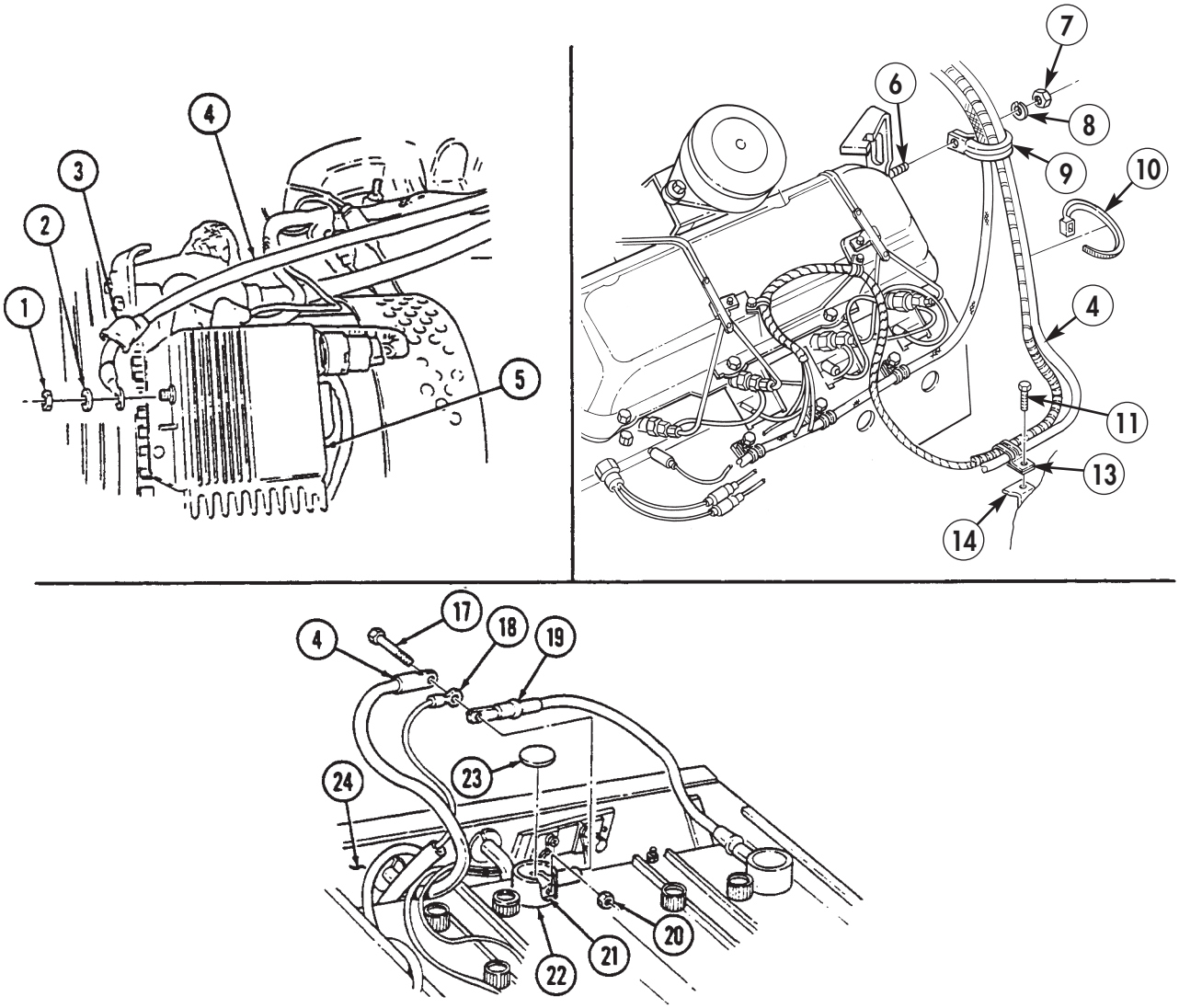

FOLLOW-ON TASKS:
- Lower and secure hood (TM 9-2320-387-10).
- Connect battery ground cables (para. 4-68).
- Install engine access cover (para. 10-22).

4-71. BUSS BAR REPLACEMENT

This task covers:

a. Removal **b. Installation**

INITIAL SETUP:

Tools

General mechanic's tool kit:
automotive (Appendix B, Item 1)

Materials/Parts

Five lockwashers (Appendix G, Item 187)
Lockwasher (Appendix G, Item 144)
Lockwasher (Appendix G, Item 167)
Sealing compound (Appendix C, Item 64)

Manual References

TM 9-2320-387-24P

Equipment Condition

Batteries removed (para. 4-74).

Maintenance Level

Unit

a. Removal

1. Remove five nuts (9), lockwashers (8), washers (7), engine harness cable (6), alternator cable (11), battery cable (10), umbilical power cable (12), and slave receptacle cable (13) from buss bar (2). Discard lockwashers (8).
2. Remove nut (5), lockwasher (4), washer (3), capscrew (14), washer (16), lockwasher (15), and buss bar (2) from power feed-through stud (1) and battery box (17). Discard lockwashers (4) and (15).

b. Installation

1. Install buss bar (2) on battery box (17) and power feed-through stud (1) with lockwasher (15), washer (16), capscrew (14), washer (3), lockwasher (4), and nut (5).
2. Install engine harness cable (6), alternator cable (11), battery cable (10), umbilical power cable (12), and slave receptacle cable (13) on buss bar (2) with five washers (7), lockwashers (8), and nuts (9).
3. Apply sealing compound to buss bar (2), coating all exposed metallic surfaces.

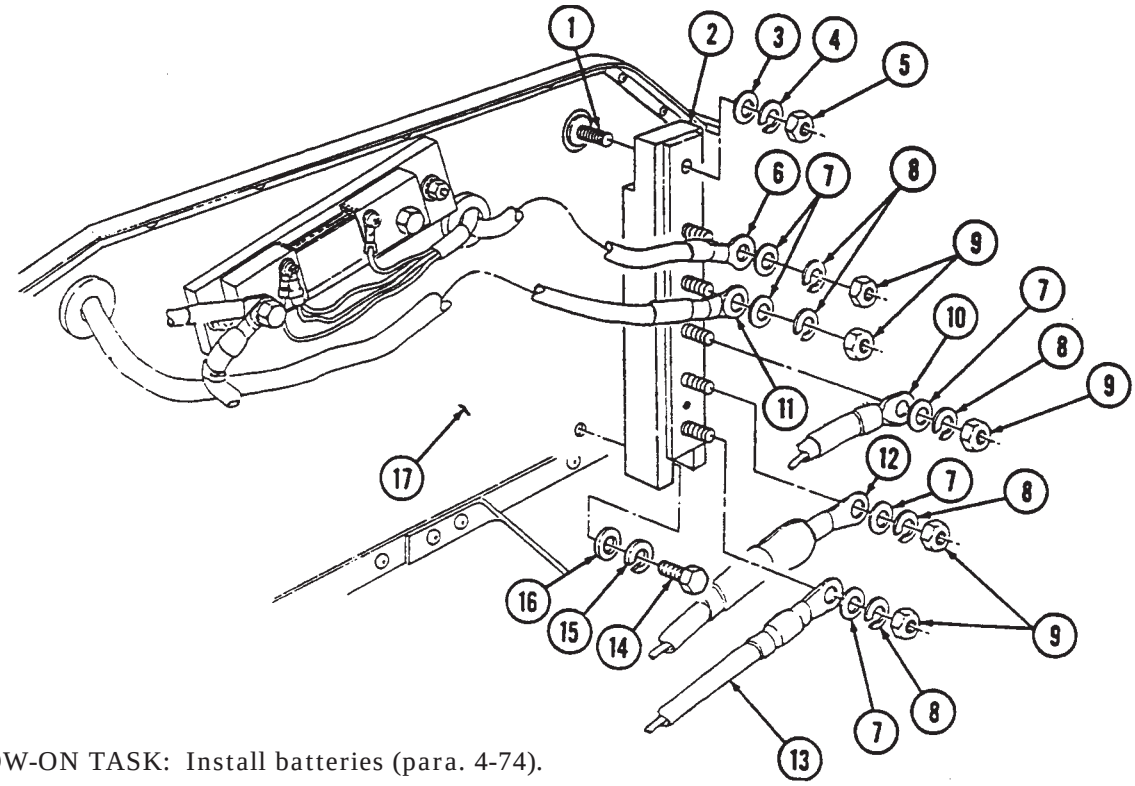

FOLLOW-ON TASK: Install batteries (para. 4-74).

4-72. STARTER POWER CABLES REPLACEMENT

This task covers:

a. Removal **b. Installation**

INITIAL SETUP:

Tools

General mechanic's tool kit:
automotive (Appendix B, Item 1)
Maintenance and repair shop equipment:
automotive (Appendix B, Item 2)

Materials/Parts

Lockwasher (Appendix G, Item 174)
Tiedown strap (Appendix G, Item 326)
Adhesive sealant (Appendix C, Item 12)
Lockwasher (Appendix G, Item 167)
Lockwasher (Appendix G, Item 187)

Materials/Parts (Cont'd)

Lockwasher (Appendix G, Item 144)
Lockwasher (Appendix G, Item 148)
Assembled locknut (Appendix G, Item 134)

Manual References

TM 9-2320-387-24P

Equipment Condition

Battery ground cables disconnected (para. 4-68).

Maintenance Level

Unit

NOTE

Prior to removal, tag all leads for installation.

a. Removal

1. Slide back rubber boot (1) on starter cable 6A (3) and remove nut (8), lockwasher (9), washer (10), lead 6B/6C (11), and starter cable (3) from power stud (2). Discard lockwasher (9).
2. Remove nut (7), lockwasher (6), and ground cable (5) from ground stud (4). Discard lockwasher (6).
3. Remove nut (16), lockwasher (15), washer (14), and engine harness cable (12) from buss bar (13). Discard lockwasher (15).
4. Remove screw (28), two clamps (30), starter cable (3), and ground cable (5) from starter (22) and remove clamps (30) from cables (3) and (5).

NOTE

Perform steps 5 and 6 for M1113 winch equipped vehicles only.

5. Remove nut (31), lockwasher (32), lead 7W (33) (winch vehicles only), STE/ICE-R lead 3D (34), and lead 7A (35) from negative post (41) on starter (22). Discard lockwasher (32).
6. Remove nut (26), lockwasher (25), starter cable (3), positive accessory cable 6W (24), and STE/ICE-R lead 81B (42) from positive post (23). Discard lockwasher (25).
7. Remove screw (36), clip (37), and leads 74A (38) and 74B (39) from solenoid (40).
8. Remove assembled locknut (19), cable (17), and clamp (18) from screw (20). Discard assembled locknut (19).
9. Remove tiedown straps (21) as required. Discard tiedown straps (21).
10. Remove cable (3), ground cable (5), STE/ICE-R harness (27), and coil (29) from vehicle.

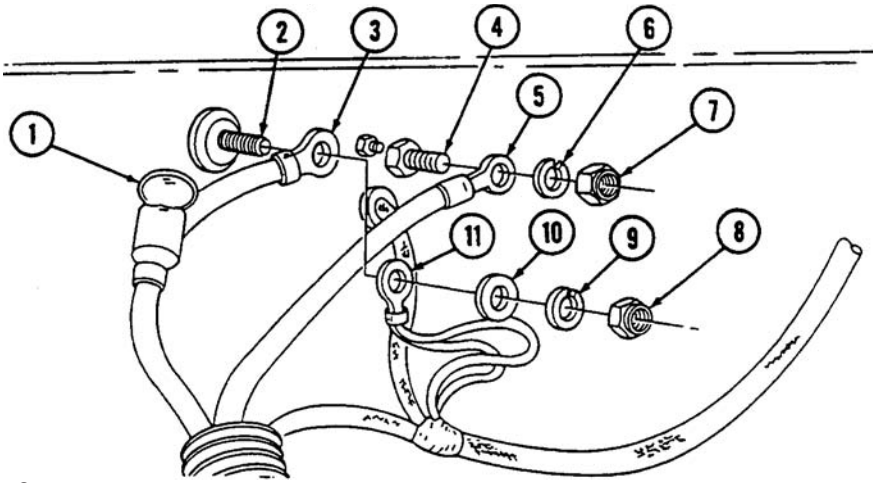

4-72. STARTER POWER CABLES REPLACEMENT (Cont'd)

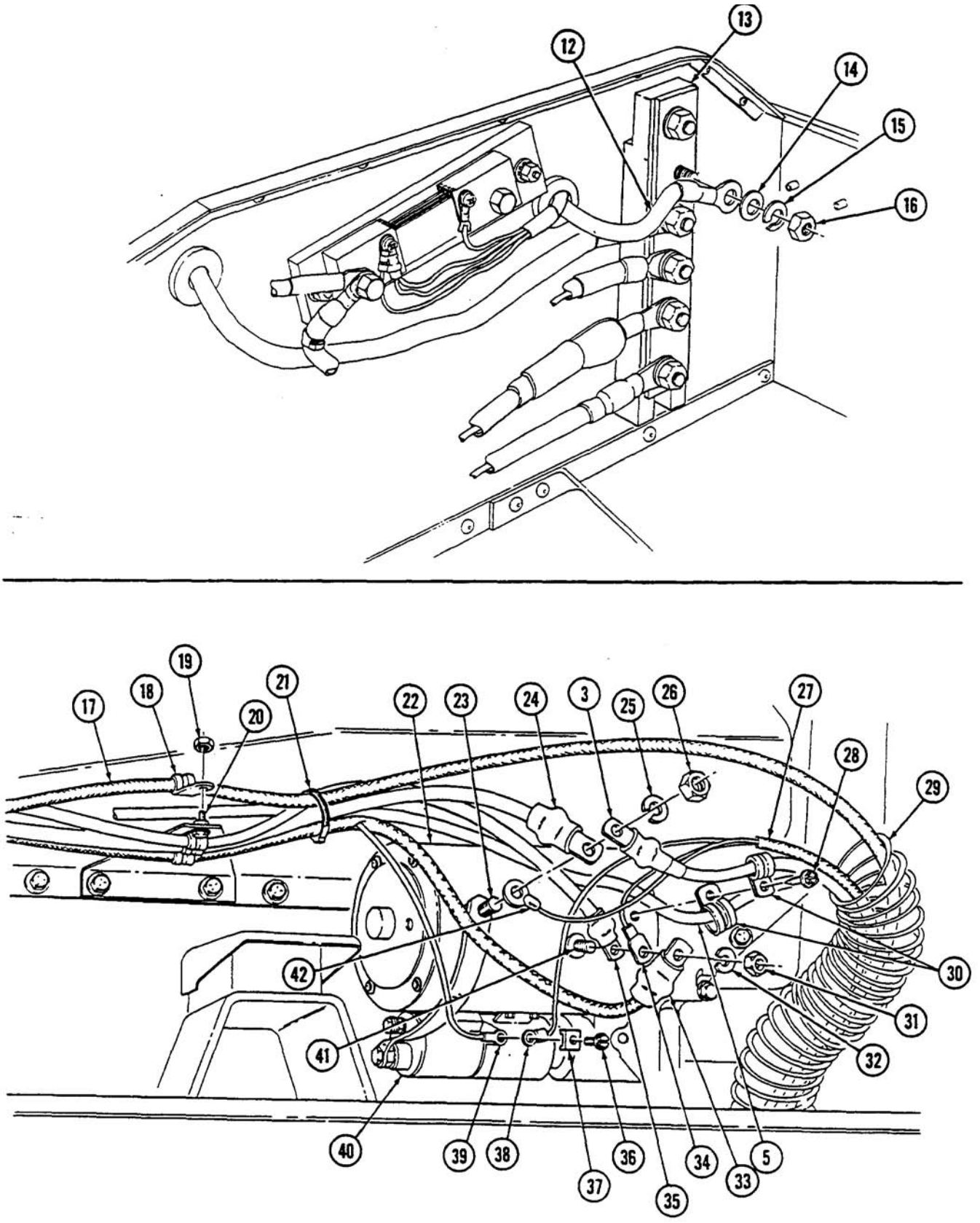

4-72. STARTER POWER CABLES REPLACEMENT (Cont'd)

b. Installation

1. Install coil (15) on starter cable (10) and ground cable (19). Route STE/ICE-R harness (13) through coil (15), and place cables (10) and (19) and STE/ICE-R harness (13) in approximate mounting locations.
2. Install engine harness cable (29), washer (31), and lockwasher (32) on buss bar (30) with nut (33).
3. Install starter cable (10) and lead 6B/6C (42) on power stud (35) with washer (41), lockwasher (40), and nut (39). Tighten nut (39) to 26 lb-ft (35 N·m). Slide rubber boot (34) over power stud (35).
4. Install ground cable (19) on ground stud (36) with lockwasher (37) and nut (38). Tighten nut (38) to 75 lb-ft (102 N·m).

NOTE

Perform step 5 on M1113 winch equipped vehicles only.

5. Install STE/ICE-R lead 81B (8), positive accessory cable 6V (9), and starter cable (10) on positive post (7) with lockwasher (11) and nut (12). Tighten nut (12) to 25-30 lb-ft (34-41 N·m).
6. Apply sealant to positive post (7) and cable terminals, coating exposed metallic surfaces. The sealant should be evenly applied with a minimum thickness of 0.12 in. (3 mm).

NOTE

Perform step 7 on M1114 vehicles only.

7. Install lead 7V (20) (winch vehicles only), lead (22), and STE/ICE-R 3C lead (21) on negative post (24) with lockwasher (18) and nut (17). Tighten nut (17) to 15-20 lb-ft (20-27 N·m).
8. Install leads 74A (27) and 74B (26) on solenoid (28) with clip (25) and screw (23).
9. Install two clamps (16) on starter cable (10) and ground cable (19) and secure to starter (6) with screw (14).
10. Install cable (1) and clamp (2) on screw (4) with assembled locknut (3).
11. Install tiedown straps (5) as required.

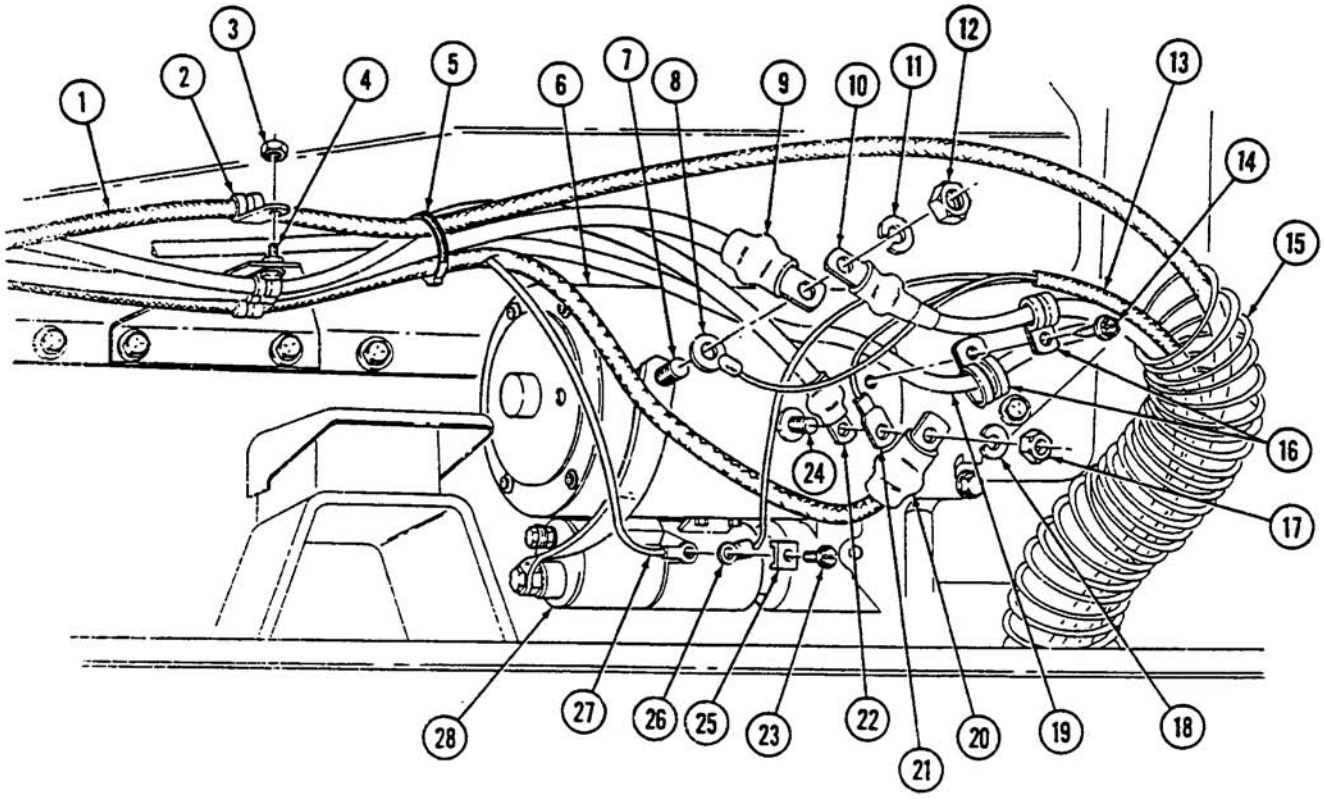

4-72. STARTER POWER CABLES REPLACEMENT (Cont'd)

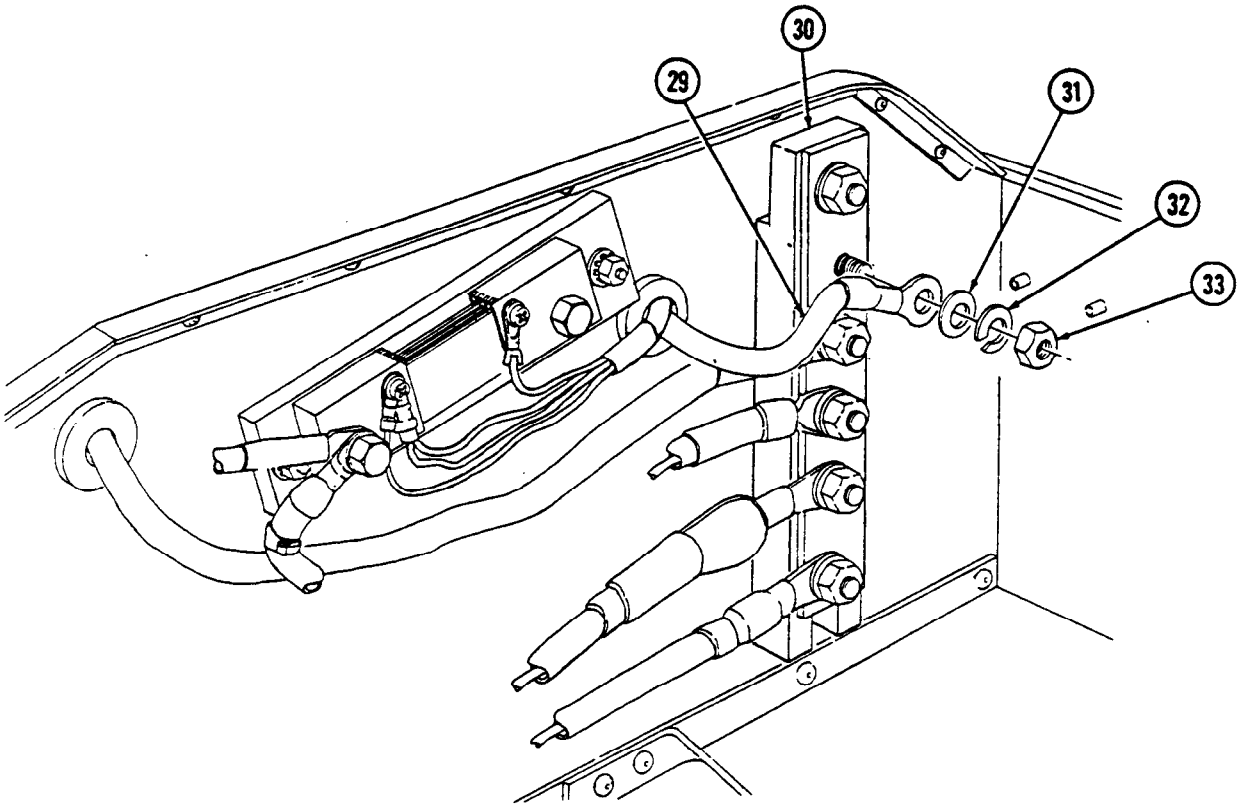

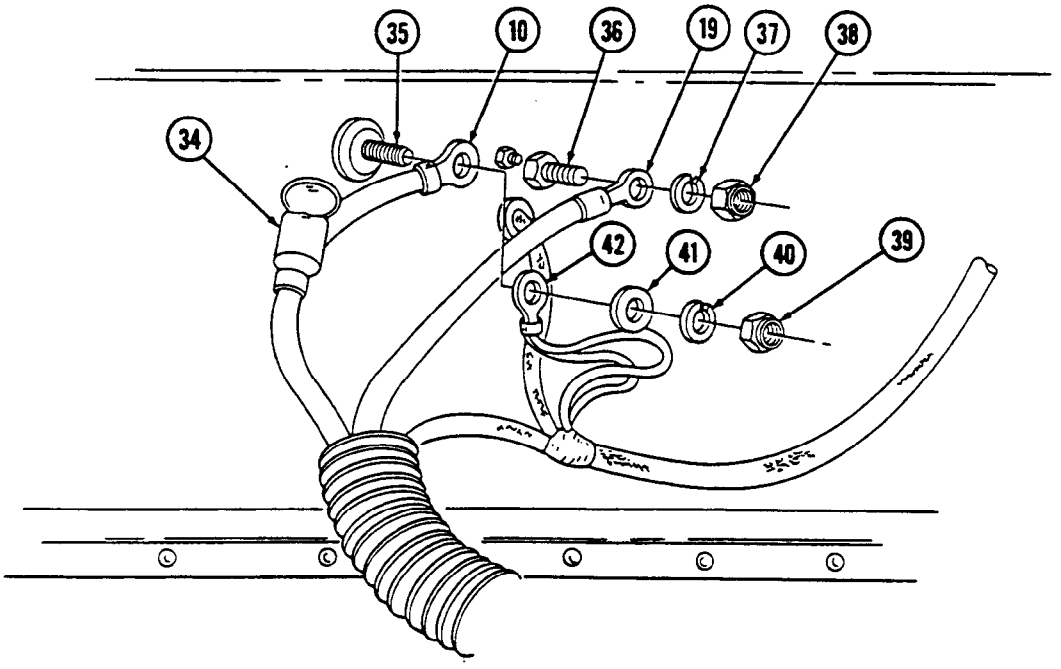

FOLLOW-ON TASK: Connect battery ground cables (para. 4-68).

4-73. BATTERY HOLDDOWN REPLACEMENT

This task covers:

a. Removal

b. Installation

INITIAL SETUP:

Tools

General mechanic's tool kit:
automotive (Appendix B, Item 1)

Manual References

TM 9-2320-387-24P

Equipment Condition

- Battery box cover removed (para. 10-43).
- Battery ground cables removed (para. 4-68).
- Battery interconnecting cable removed (para. 4-68).
- Battery positive cable removed (para. 4-68).

General Safety Instructions

- Wear safety goggles and rubber gloves, and do not smoke when performing battery maintenance.
- Remove all jewelry.

Maintenance Level

Unit

WARNING

- Battery acid (electrolyte) is extremely harmful. Always wear safety goggles and rubber gloves, and do not smoke when performing battery maintenance. Severe injury will result if acid contacts eyes or skin.
- Remove all jewelry such as rings, dog tags, bracelets, etc. If jewelry or disconnected battery ground cable contact battery terminal, a direct short can result, causing instant heating of tools, severe injury to personnel, or damage to equipment.

a. Removal

Remove four nuts (2), battery holddown (3), and four holddown rods (1) from batteries (5) and brackets (4).

b. Installation

Install battery holddown (3) on batteries (5) and brackets (4) with four holddown rods (1) and four nuts (2).

4-73. BATTERY HOLDDOWN REPLACEMENT (Cont'd)

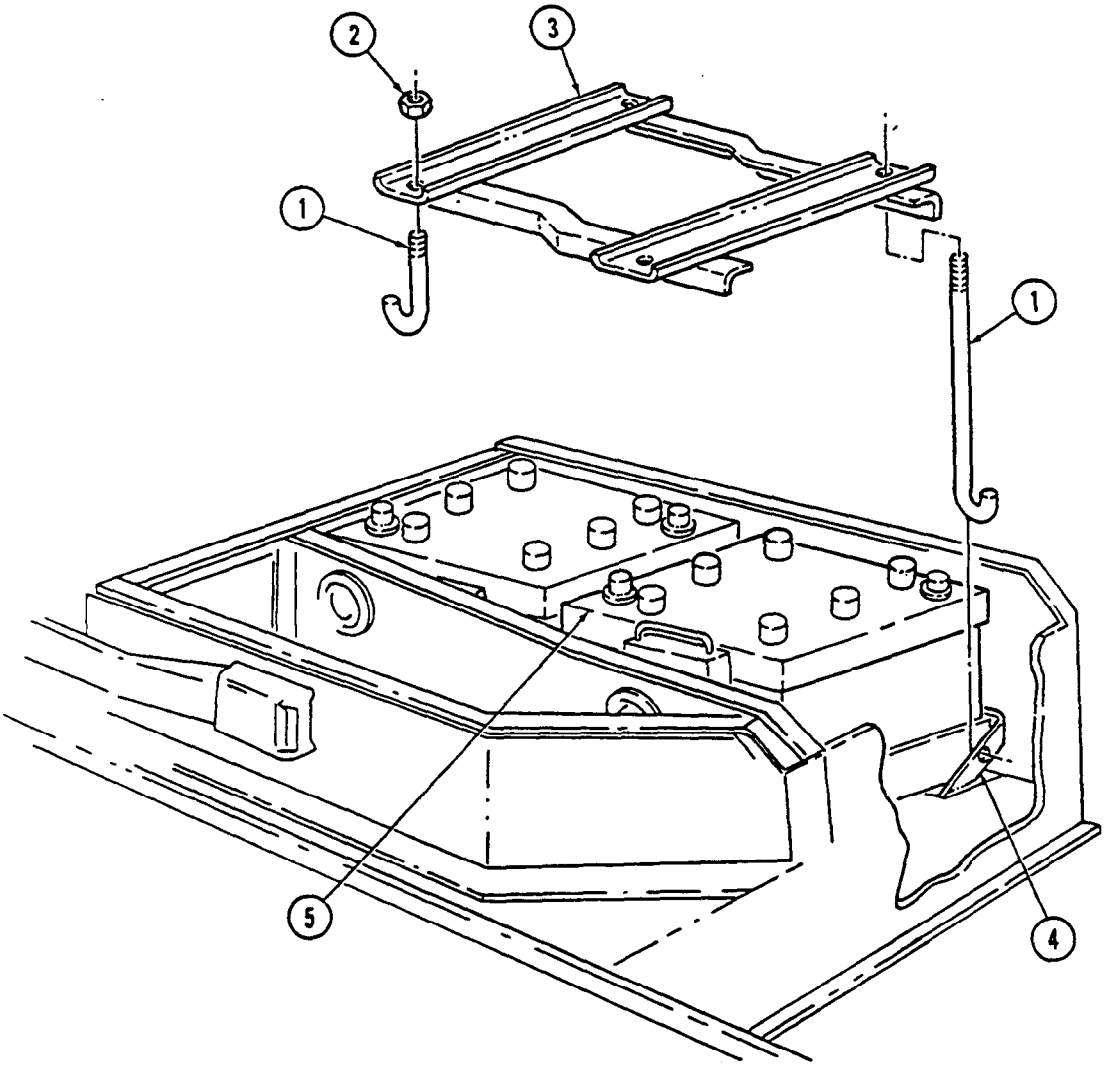

FOLLOW-ON TASKS:
- Install battery positive cable (para. 4-68).
- Install battery interconnecting cable (para. 4-68).
- Install battery ground cables (para. 4-68).
- Install battery box cover (para. 10-43).

4-74. BATTERY REPLACEMENT AND SERVICING

This task covers:

a. Removal
b. Servicing
c. Installation

INITIAL SETUP:

Tools
General mechanic's tool kit: automotive (Appendix B, Item 1)

Manual References
TM 9-6140-200-14
TM 9-2320-387-24P

Equipment Condition
Battery holddown removed (para. 4-73).

General Safety Instructions
- Wear safety goggles and rubber gloves, and do not smoke when performing battery maintenance.
- Remove all jewelry.

Maintenance Level
Unit

WARNING

- Battery acid (electrolyte) is extremely harmful. Always wear safety goggles and rubber gloves, and do not smoke when performing battery maintenance. Severe injury will result if acid contacts eyes or skin.
- Remove all jewelry such as rings, dog tags, bracelets, etc. If jewelry or disconnected battery ground cable contacts battery terminal, a direct short can result, causing instant heating of tools, severe injury to personnel, or damage to equipment.

a. Removal

Remove two batteries (1) from battery box (2).

b. Servicing

NOTE

For battery testing and servicing instructions, refer to TM 9-6140-200-14.

c. Installation

NOTE

Ensure negative terminal posts are correctly located. Cables must reach their respective terminals without stretching.

Install two batteries (1) in battery box (2).

4-74. BATTERY REPLACEMENT AND SERVICING (Cont'd)

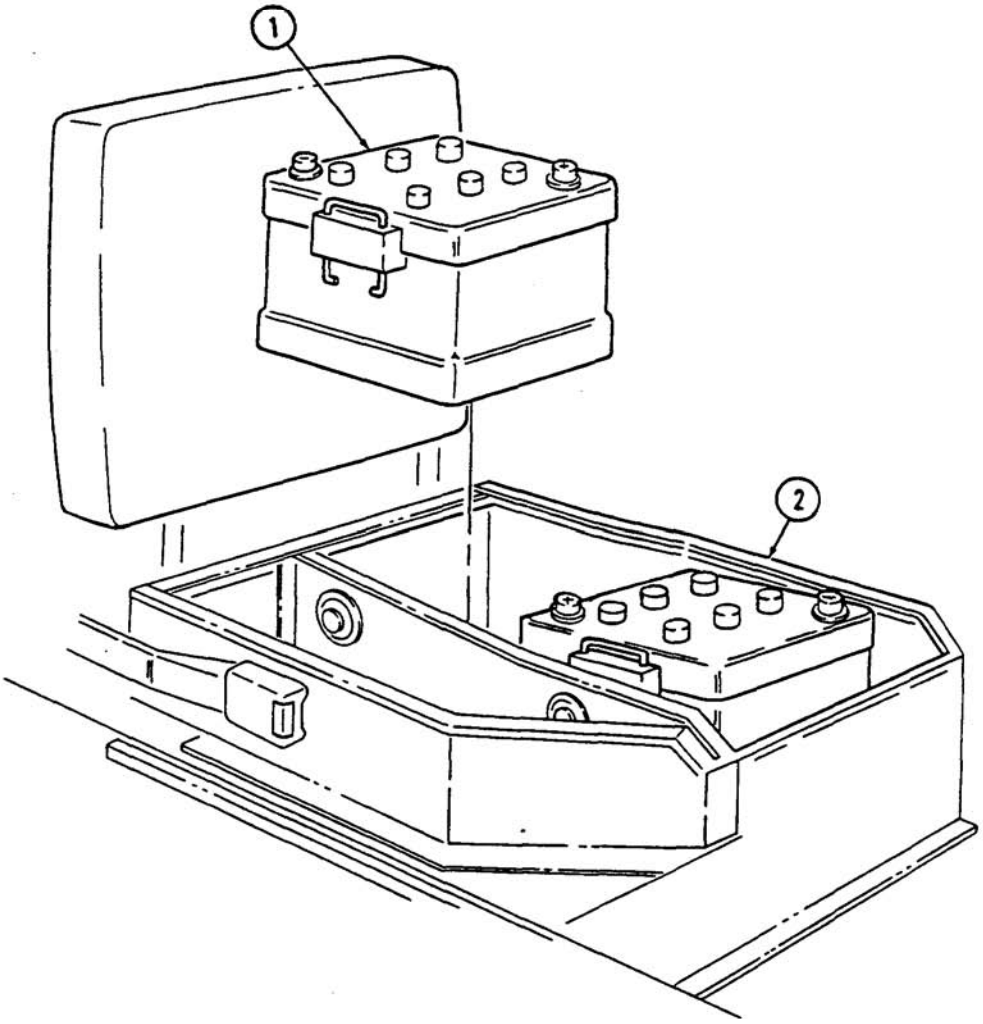

FOLLOW-ON TASK: Install battery holddown (para. 4-73).

4-75. BATTERY TRAY MAINTENANCE

This task covers:

a. Removal
b. Cleaning and Inspection
c. Preventive Modification
d. Installation

INITIAL SETUP:

Tools
General mechanic's tool kit:
automotive (Appendix B, Item 1)
Maintenance and repair shop equipment:
automotive (Appendix B, Item 2)

Materials/Parts
Four locknuts (Appendix G, Item 77)
Sodium bicarbonate (Appendix C, Item 76)

Manual References
TM 9-6140-200-14
TM 9-2320-387-24P

Equipment Condition
Batteries removed (para. 4-74).

Maintenance Level
Unit

a. Removal

Remove four locknuts (6), washers (2), capscrews (1), washers (2), and battery tray (3) from battery box (5). Discard locknuts (6).

b. Cleaning and Inspection

NOTE

For additional information on battery box tray cleaning, refer to TM 9-6140-200-14.

1. Clean battery tray (3) with sodium bicarbonate solution.
2. Inspect battery tray (3) for damage. Replace if damaged.
3. Inspect battery cable protectors (4) and battery compartment seals (7) for damage. Replace if damaged.

c. Preventive Modification

NOTE

- The following step will prevent water from accumulating in the battery tray.
- Refer to hole diagram for location of holes.

Locate, mark, and drill four 1/2-in. holes in battery tray (3).

d. Installation

Install battery tray (3) on battery box (5) with four washers (2), capscrews (1), washers (2), and locknuts (6). Tighten locknuts (6) to 6 lb-ft (8 N·m).

4-75. BATTERY TRAY MAINTENANCE (Cont'd)

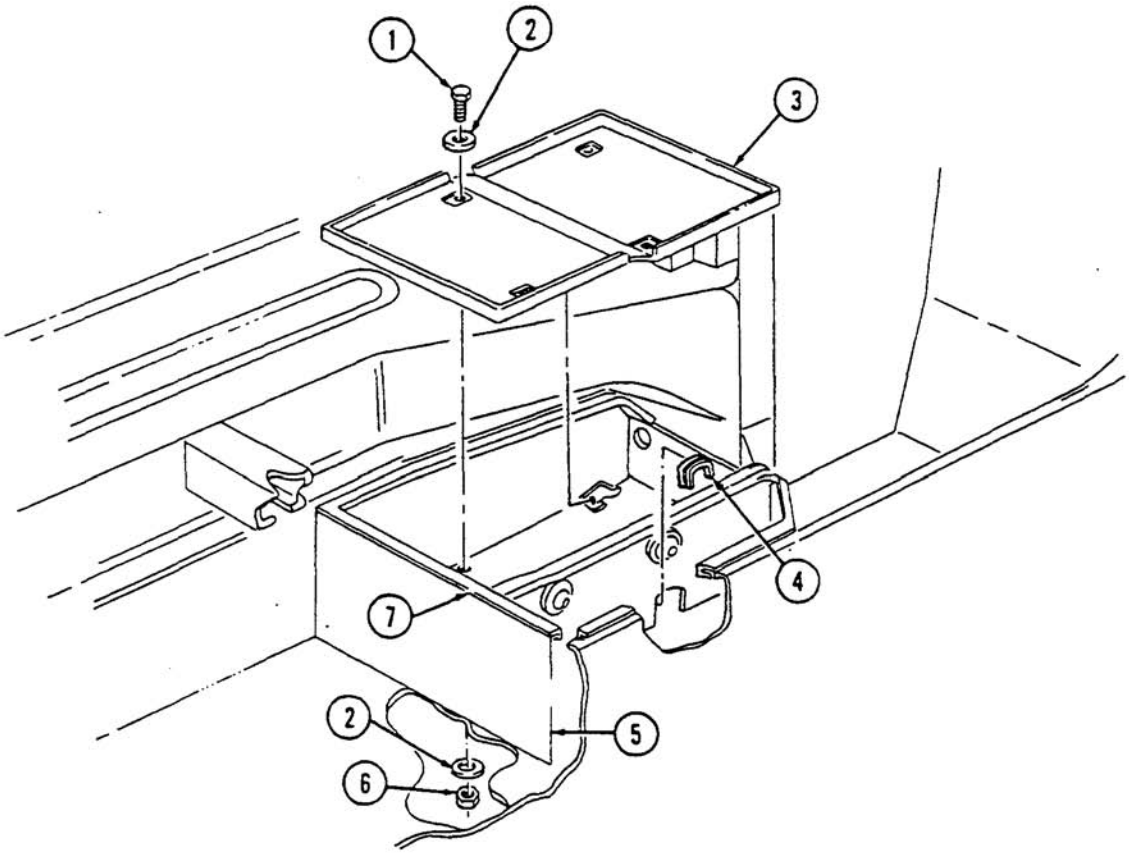

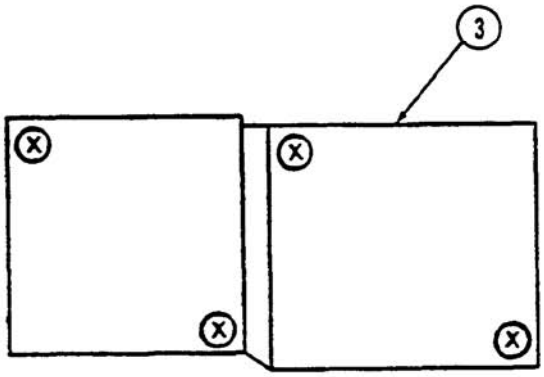

HOLE DIAGRAM

FOLLOW-ON TASK: Install batteries (para. 4-74).

4-76. SLAVE RECEPTACLE AND CABLE MAINTENANCE

This task covers:

a. Removal
b. Inspection
c. Installation

INITIAL SETUP:

Tools

General mechanic's tool kit:
automotive (Appendix B, Item 1)
Maintenance and repair shop equipment:
automotive (Appendix B, Item 2)

Materials/Parts

Two lockwashers (Appendix G, Item 135)
Lockwasher (Appendix G, Item 153)
Two lockwashers (Appendix G, Item 187)
Silicone compound (Appendix C, Item 75)

Manual References

TM 9-2320-387-24P

Equipment Condition

Battery tray removed (para. 4-75).

Maintenance Level

Unit

a. Removal

NOTE

Prior to removal, tag leads for installation.

1. Remove capscrew (8), lockwasher (9), slave negative cable (10), and battery negative cable (11) from shunt (1). Discard lockwasher (9).
2. Remove two nuts (6), lockwashers (5), washers (4), battery positive cable (7), and slave positive cable (3) from buss bar (2). Discard lockwashers (5).
3. Remove four nuts (15), capscrews (17), and cover (18) from receptacle (16) and battery box (12).
4. Loosen compression nut (22) on backshell (21).
5. Remove backshell (21) from receptacle (16).
6. Remove capscrew (13), lockwasher (14), and slave negative cable (10) from receptacle (16). Discard lockwasher (14).
7. Remove capscrew (19), lockwasher (20), and slave positive cable (3) from receptacle (16). Discard lockwasher (20).
8. Remove receptacle (16) from battery box (12).

b. Inspection

NOTE

Cover and/or receptacle do not require replacement if dust cover cable is broken. To replace dust cover cable, crimp a terminal ring (NSN 5940-00-143-4794) to each end of a 9-in. (22.9-cm) piece of nylon cord (NSN 4020-00-246-0688).

1. Inspect cover (18) for breaks and cracks. Replace if damaged.
2. Inspect cables (3) and (10) for damage. Replace if damaged.

c. Installation

NOTE

Slave receptacle cover cord is secured under upper left capscrew.

1. Install receptacle (16) and cover (18) on battery box (12) with four capscrews (17) and nuts (15).
2. Install slave positive cable (3) and battery positive cable (7) on buss bar (2) with two washers (4), lockwashers (5), and nuts (6). Tighten nuts (6) to 26 lb-ft (35 N·m).

4-76. SLAVE RECEPTACLE AND CABLE MAINTENANCE (Cont'd)

3. Install battery negative cable (11) and slave negative cable (10) on shunt (1) with lockwasher (9) and capscrew (8). Tighten capscrew (8) to 8 lb-ft (11 N·m).
4. Install slave positive cable (3) through compression nut (22) and backshell (21) on receptacle (16) with lockwasher (20) and capscrew (19).
5. Install slave negative cable (10) on receptacle (16) with lockwasher (14) and capscrew (13).
6. Apply silicone compound on receptacle (16) terminals, all exposed metal on rear of receptacle (16), and area under cover (18) on front of receptacle (16).
7. Install backshell (21) on receptacle (16).
8. Tighten compression nut (22) on backshell (21).

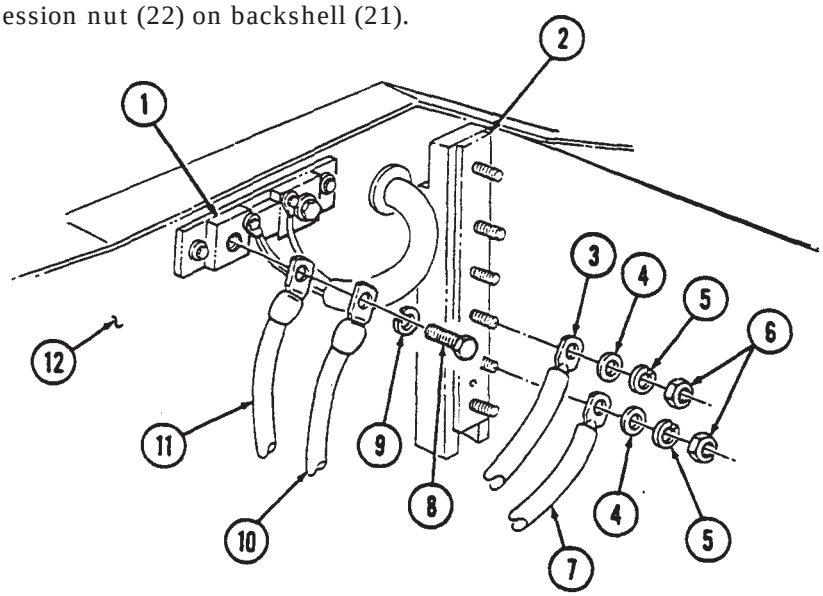

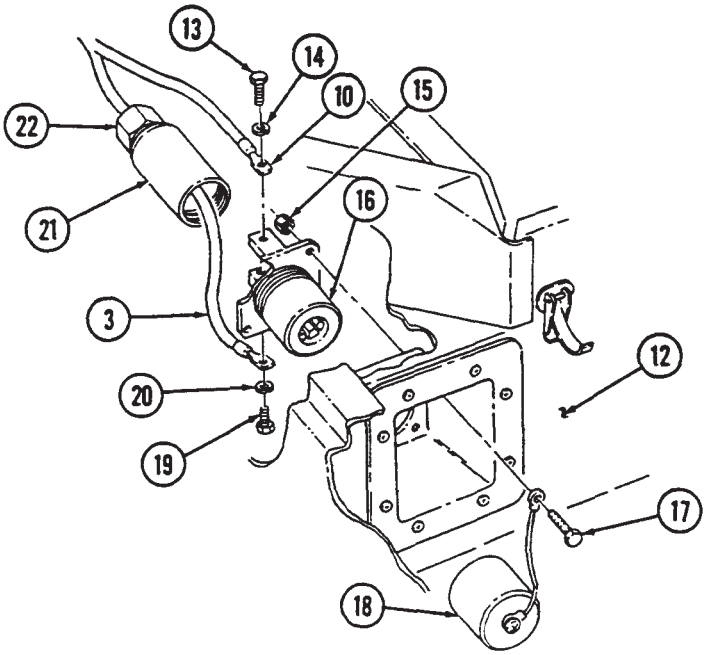

FOLLOW-ON TASK: Install battery tray (para. 4-75).

4-77. WINCH POWER CABLE REPLACEMENT

This task covers:

a. Front Power Cable Removal
b. Front Power Cable Installation
c. Rear Power Cable Removal
d. Rear Power Cable Installation

INITIAL SETUP:

Tools

General mechanic's tool kit:
automotive (Appendix B, Item 1)
Maintenance and repair shop equipment:
automotive (Appendix B, Item 2)

Materials/Parts

Assembled locknut (Appendix G, Item 134)
Lockwasher (M1114) (Appendix G, Item 144)
Lockwasher (M1114) (Appendix G, Item 187)
Lockwasher (M1114) (Appendix G, Item 167)
Five tiedown straps (Appendix G, Item 325)
Five tiedown straps (M1114)
(Appendix G, Item 322)

Manual References

TM 9-2320-387-10
TM 9-2320-387-24P

Equipment Condition

Batteries removed (M1114 only) (para. 4-74).

Maintenance Level

Unit

a. Front Power Cable Removal

1. Remove capscrew (5) and lead 7 (4) from winch (8).
2. Remove nut (7) and lead 6W (6) from solenoid (3).
3. Remove screw (1) and clamp (9) from lead 7 (4), lead 6W (6), and lower radiator mount (2).
4. Remove screw (11) and clamp (10) from lead 7 (4), lead 6W (6), and bracket (12).
5. Remove two screws (13) and clamps (14) from lead 7 (4), lead 6W (6), and airlift bracket (15).
6. Remove assembled locknut (16), capscrew (18), and clamp (19) from lead 7 (4), lead 6W (6), and bracket (17). Discard assembled locknut (16).
7. Remove nut (23) and lead 7 (4) from starter negative stud (22).
8. Remove nut (20) and lead 6W (6) from starter positive stud (21).

b. Front Power Cable Installation

1. Install lead 6W (6) on starter positive stud (21) with nut (20). Tighten nut (20) to 25-30 lb-ft (34-41 N·m).
2. Install lead 7 (4) on starter negative stud (22) with nut (23). Tighten nut (23) to 15-20 lb-ft (20-27 N·m).
3. Install lead 7 (4) and lead 6W (6) on bracket (17) with clamp (19), capscrew (18), and assembled locknut (16).
4. Install lead 7 (4) and lead 6W (6) on airlift bracket (15) with two clamps (14) and screws (13).
5. Install lead 7 (4) and lead 6W (6) on bracket (12) with clamp (10) and screw (11).
6. Install lead 7 (4) and lead 6W (6) on lower radiator mount (2) with clamp (9) and screw (1).
7. Install lead 6W (6) on solenoid (3) with nut (7).
8. Install lead 7 (4) on winch (8) with capscrew (5).

4-77. WINCH POWER CABLE REPLACEMENT (Cont'd)

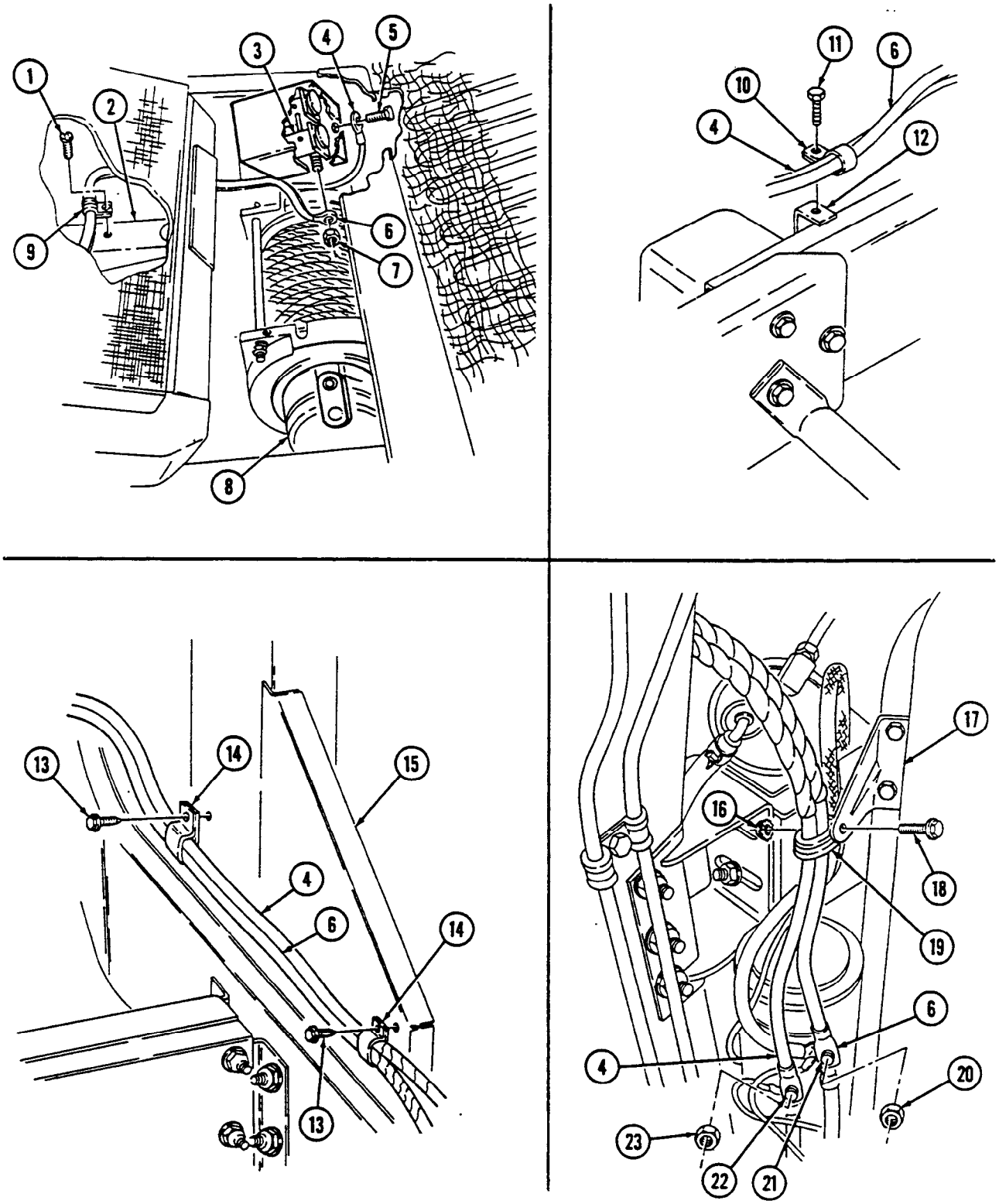

4-77. WINCH POWER CABLE REPLACEMENT (Cont'd)

c. Rear Power Cable Removal

1. Remove capscrew (8), lockwasher (7), ground lead (6), and lead 7 (5) from winch (4). Discard lockwasher (7).
2. Remove nut (1) and lead 6W (3) from solenoid (2).
3. Remove nine screws (13), clamps (12), five tiedown straps (11), harness (10), and leads 7 (5) and 6W (3) from body (9). Discard tiedown straps (11).
4. Remove nut (18), lockwasher (19), washer (20), and lead 6W (3) from buss bar (17). Discard lockwasher (19).
5. Remove nut (15), lockwasher (14), and lead 7 (5) from capscrew (16). Discard lockwasher (14).

d. Rear Power Cable Installation

1. Install lead 7 (5) on capscrew (16) with lockwasher (14) and nut (15). Tighten nut (15) to 15-20 lb-ft (20-27 N•m).
2. Install lead 6W (3) on buss bar (17) with washer (20), lockwasher (19), and nut (18). Tighten nut (18) to 15-20 lb-ft (20-27 N•m).
3. Install leads 7 (5), 6W (3), and harness (10) on body (9) with nine clamps (12), screws (13), and five tiedown straps (11).
4. Install lead 6W (3) on solenoid (2) with nut (1).
5. Install lead 7 (5) and ground lead (6) on winch (4) with lockwasher (7) and capscrew (8).

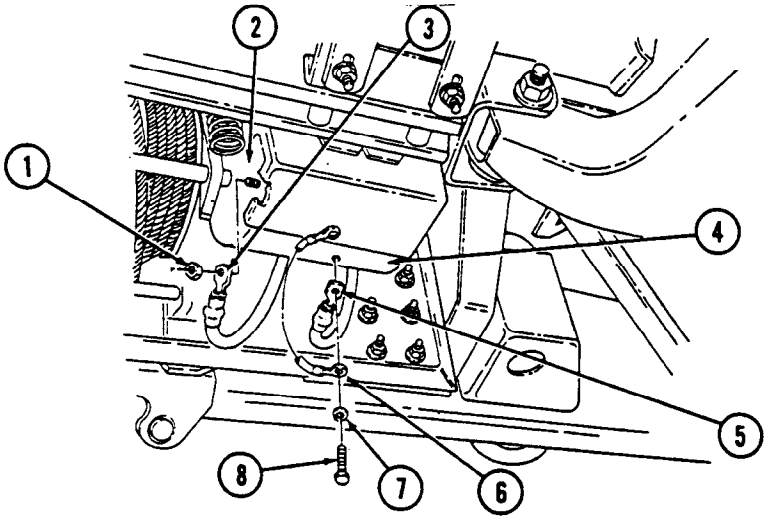

4-77. WINCH POWER CABLE REPLACEMENT (Cont'd)

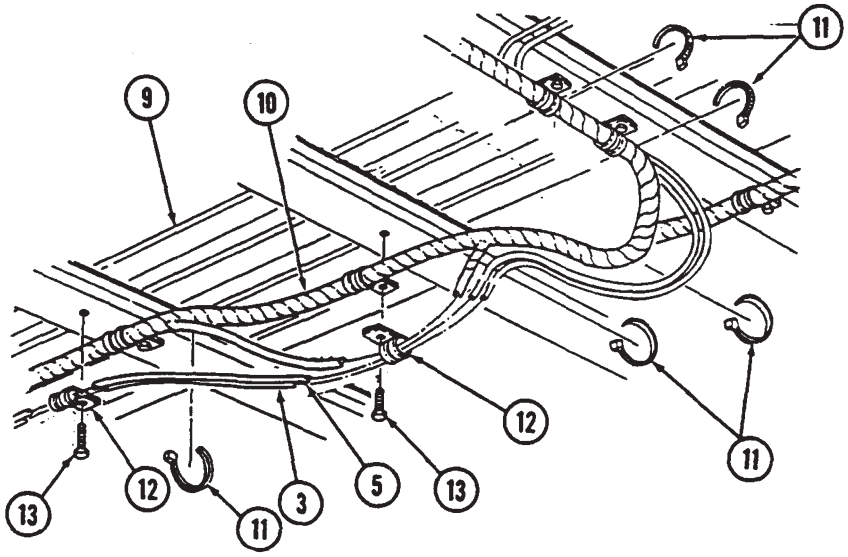

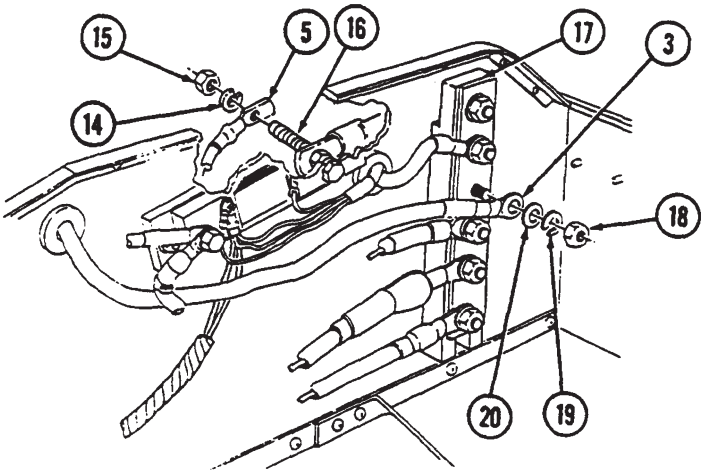

FOLLOW-ON TASKS: • Install batteries (M1114 only) (para. 4-74).
• Test winch for proper operation (TM 9-2320-387-10).

4-78. SHUNT REPLACEMENT

This task covers:

a. Removal **b. Installation**

INITIAL SETUP:

Tools

General mechanic's tool kit:
automotive (Appendix B, Item 1)
Maintenance and repair shop equipment:
automotive (Appendix B, Item 2)

Materials/Parts

Two lockwashers (Appendix G, Item 189)
Two assembled locknuts (Appendix G, Item 134)
Two lockwashers (Appendix G, Item 174)
Lockwasher (Appendix G, Item 153)

Personnel Required

One mechanic
One assistant

Manual References

TM 9-2320-387-24P

Equipment Condition

Batteries removed (para. 4-74).

Maintenance Level

Unit

NOTE

Prior to removal, tag leads for installation.

a. Removal

1. Remove two screws (11), washers (8), and lockwashers (9) and disconnect leads 7B and 7D (15), 9A (16), and 8A (6) from shunt (17). Discard lockwashers (9).
2. Remove nut (1), lockwasher (2), and starter cable (3) from capscrew (10). Discard lockwasher (2).
3. Remove nut (19), lockwasher (18), and capscrew (10) from shunt (17). Discard lockwasher (18).
4. Remove capscrew (12), lockwasher (13), and two negative cables (14) from shunt (17). Discard lockwasher (13).
5. Remove two assembled locknuts (7), washers (5), capscrews (4), washers (5), and shunt (17) from battery box (20). Discard assembled locknuts (7).

b. Installation

1. Install shunt (17) on battery box (20) with two washers (5), capscrews (4), washers (5), and assembled locknuts (7). Tighten assembled locknuts (7) to 8 lb-ft (11 N·m).
2. Install two negative cables (14) on shunt (17) with lockwasher (13) and capscrew (12). Tighten capscrew (12) to 8 lb-ft (11 N·m).
3. Install capscrew (10) on shunt (17) with lockwasher (18) and nut (19). Tighten nut (19) to 75 lb-ft (102 N·m).
4. Install starter cable (3) on capscrew (10) with lockwasher (2) and nut (1). Tighten nut (1) to 18-22 lb-ft (24-30 N·m).
5. Install leads 9A (16), 7B and 7D (15), and 8A (6) on shunt (17) with two lockwashers (9), washers (8), and screws (11).

4-78. SHUNT REPLACEMENT (Cont'd)

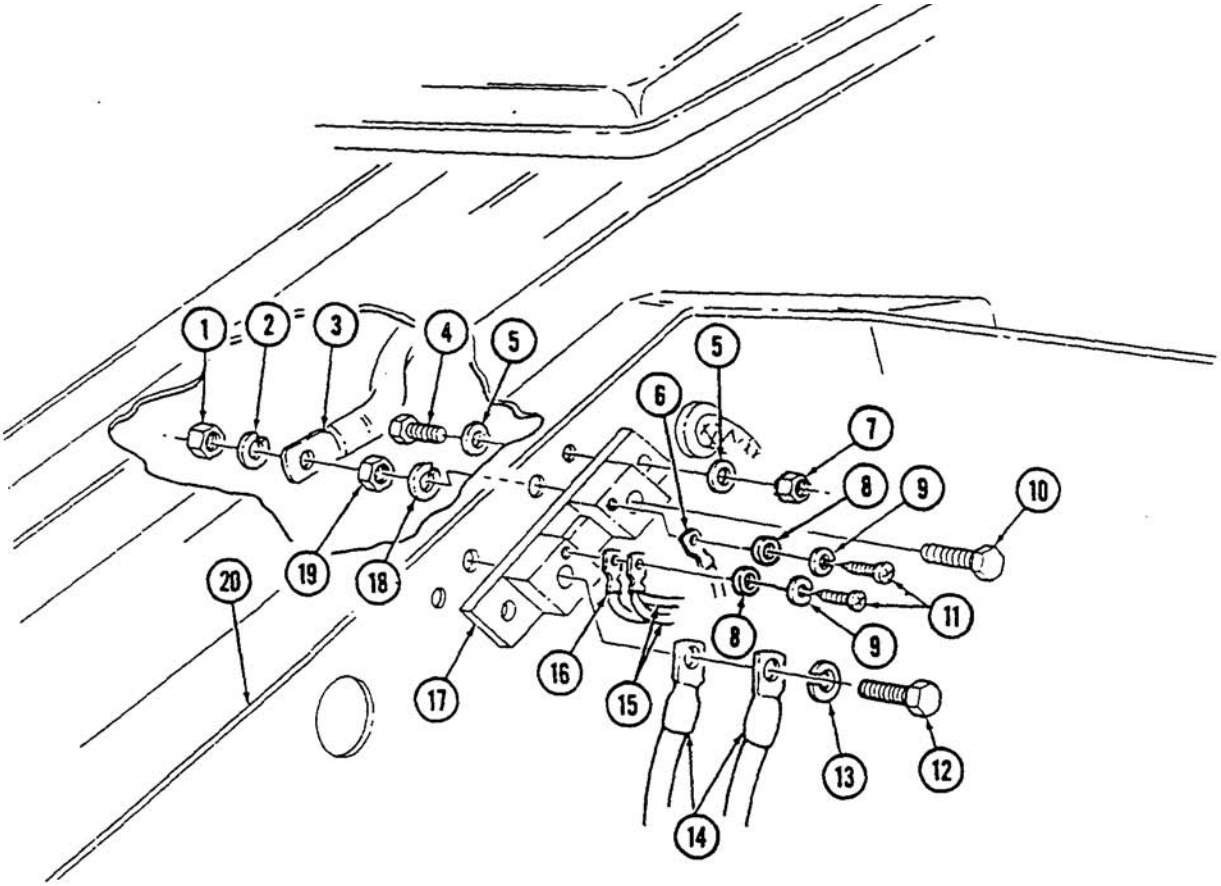

FOLLOW-ON TASK: Install batteries (para. 4-74).

4-79. HOOD JUMPER WIRING HARNESS REPLACEMENT

This task covers:

a. Removal **b. Installation**

INITIAL SETUP:

Tools
General mechanic's tool kit:
automotive (Appendix B, Item 1)

Materials/Parts
Lockwasher (Appendix G, Item 144)
Antiseize compound (Appendix C, Item 16)

Manual References
TM 9-2320-387-10
TM 9-2320-387-24P

Equipment Condition
Side marker light assembly removed (para. 4-56).

Maintenance Level
Unit

CAUTION

Use care when removing harness from vehicle. Failure to do so may cause damage to equipment.

NOTE

Prior to removal, tag leads for installation.

a. Removal

1. Disconnect left and right hood jumper wiring harness connector (1) from body harness connector (2).

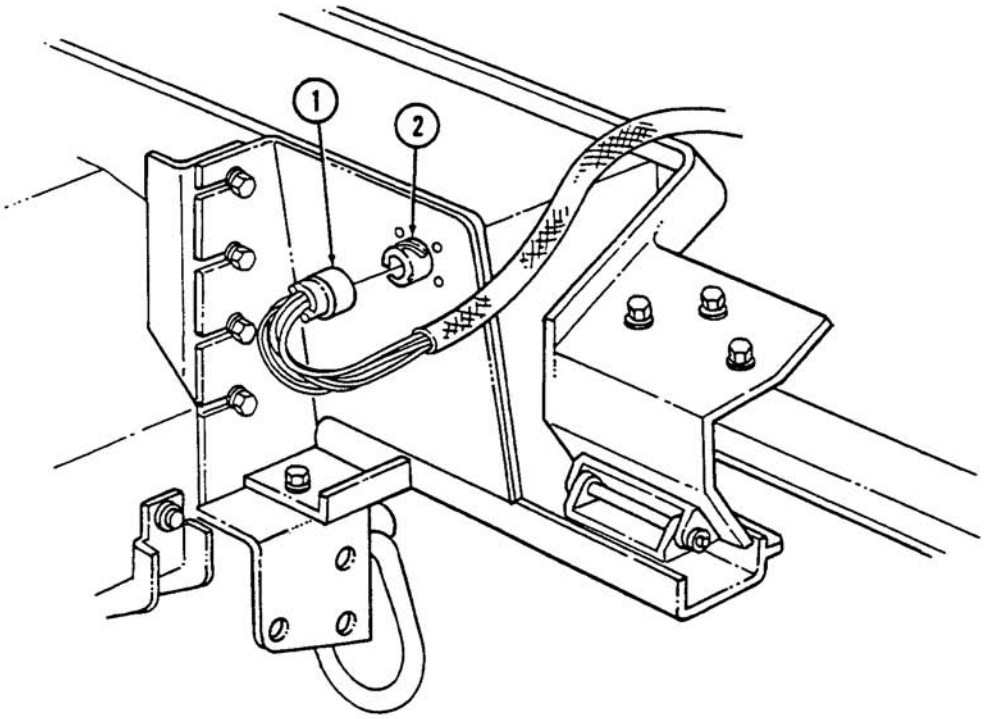

4-79. HOOD JUMPER WIRING HARNESS REPLACEMENT (Cont'd)

2. Remove nut (7), lockwasher (8), and special washer (9) from blackout drive light (3) and hood (10). Discard lockwasher (8).
3. Disconnect lead 19B (5) from blackout drive light (3).
4. Remove blackout drive light (3), ground lead 92C (4), and coned mounting washer (6) from swivel bracket (11).
5. Disconnect harness leads 20E (12), 461B (21), and 491C (19) from left composite light terminals (20).
6. Remove capscrew (14), washer (13), and left composite light ground 92B (15) from buss bar (16).
7. Remove rubber grommet (18) from hood (10).
8. Remove hood jumper wiring harness (17) from hood (10).

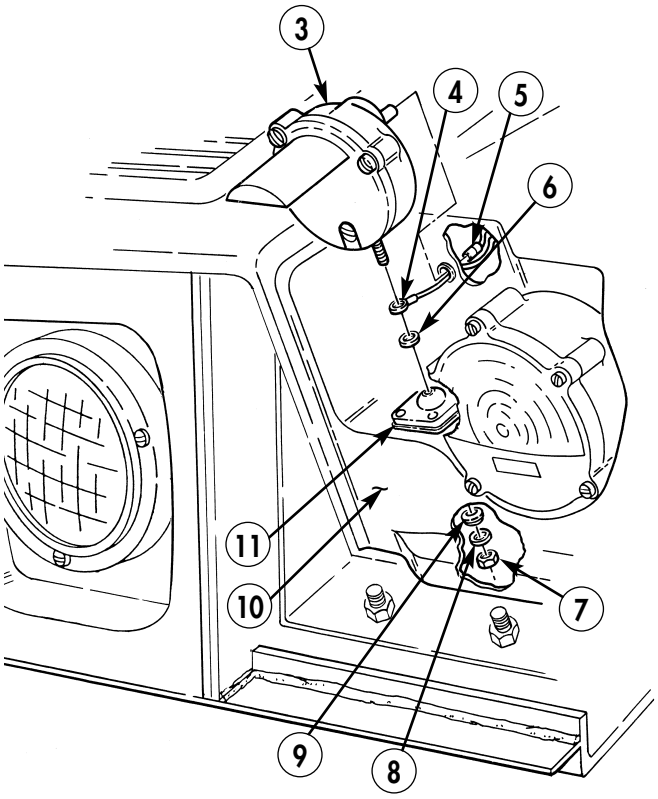

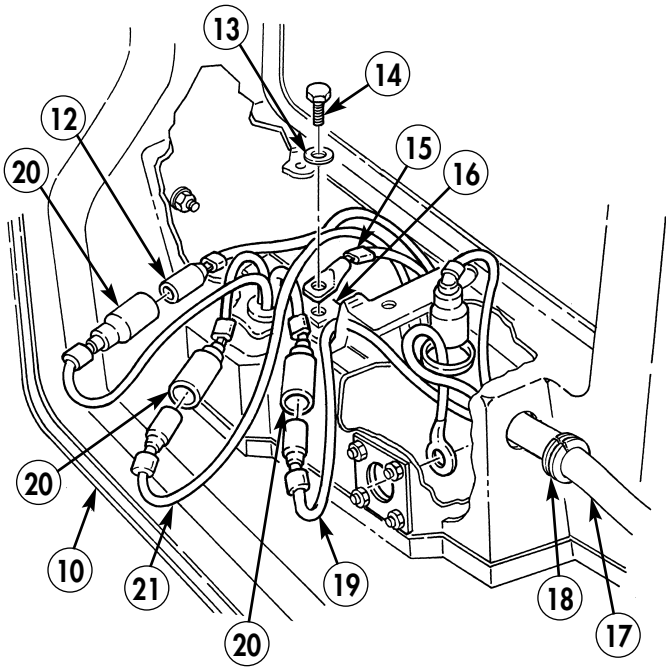

4-79. HOOD JUMPER WIRING HARNESS REPLACEMENT (Cont'd)

9. Disconnect harness leads 20F (3), 460B (5), and 491D (6) from right composite light terminals (4).
10. Remove capscrew (2), washer (1), and right composite light ground lead 92A (11) from buss bar (7).
11. Remove rubber grommet (8) from hood (10).
12. Remove hood jumper wiring harness (9) from hood (10).

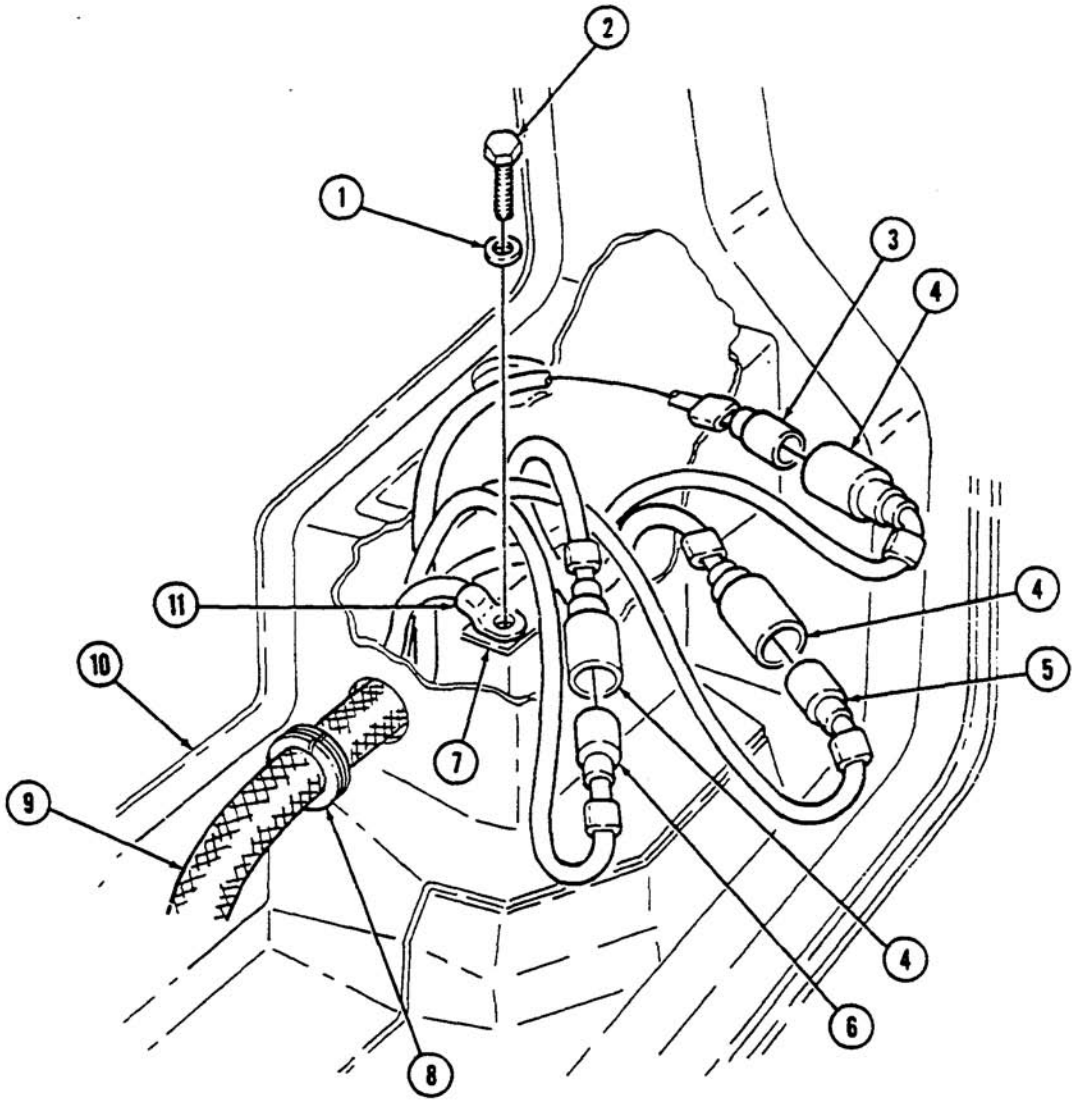

4-79. HOOD JUMPER WIRING HARNESS REPLACEMENT (Cont'd)

b. Installation

CAUTION

Use care when installing harness. Failure to do so may cause damage to harness.

1. Position left side hood jumper wiring harness (14) in approximate mounting position.
2. Install rubber grommet (15) on hood (7).
3. Connect ground lead 92C (2) to blackout drive light (1).
4. Place coned mounting washer (9), ground lead 19B (3), and blackout drive light (1) through hole in swivel bracket (8).
5. Install blackout drive light (1) on hood (7) with special washer (6), lockwasher (5), and nut (4).
6. Apply antiseize compound to left composite light ground lead 92C (12) and install on buss bar (13) with washer (10) and capscrew (11).
7. Connect harness leads 20E (19), 461B (18), and 491B (16) to left composite light terminals (17).

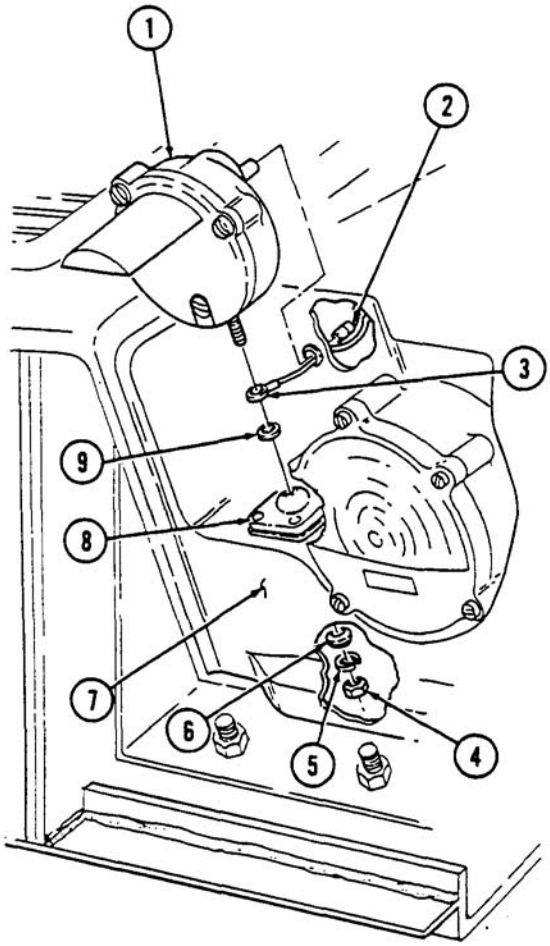

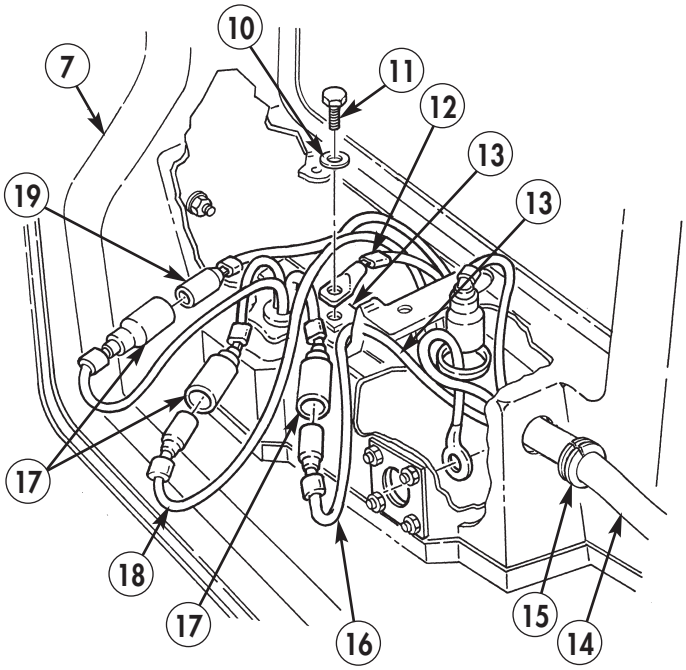

4-79. HOOD JUMPER WIRING HARNESS REPLACEMENT (Cont'd)

8. Position right side jumper wiring harness (9) in approximate mounting position.
9. Install rubber grommet (8) on hood (10).
10. Apply antiseize compound to right composite light ground 92C (11) and install on buss bar (7) with washer (1) and capscrew (2).
11. Connect harness leads 20F (3), 60B (5), and 491B (6) to left composite light terminals (4).

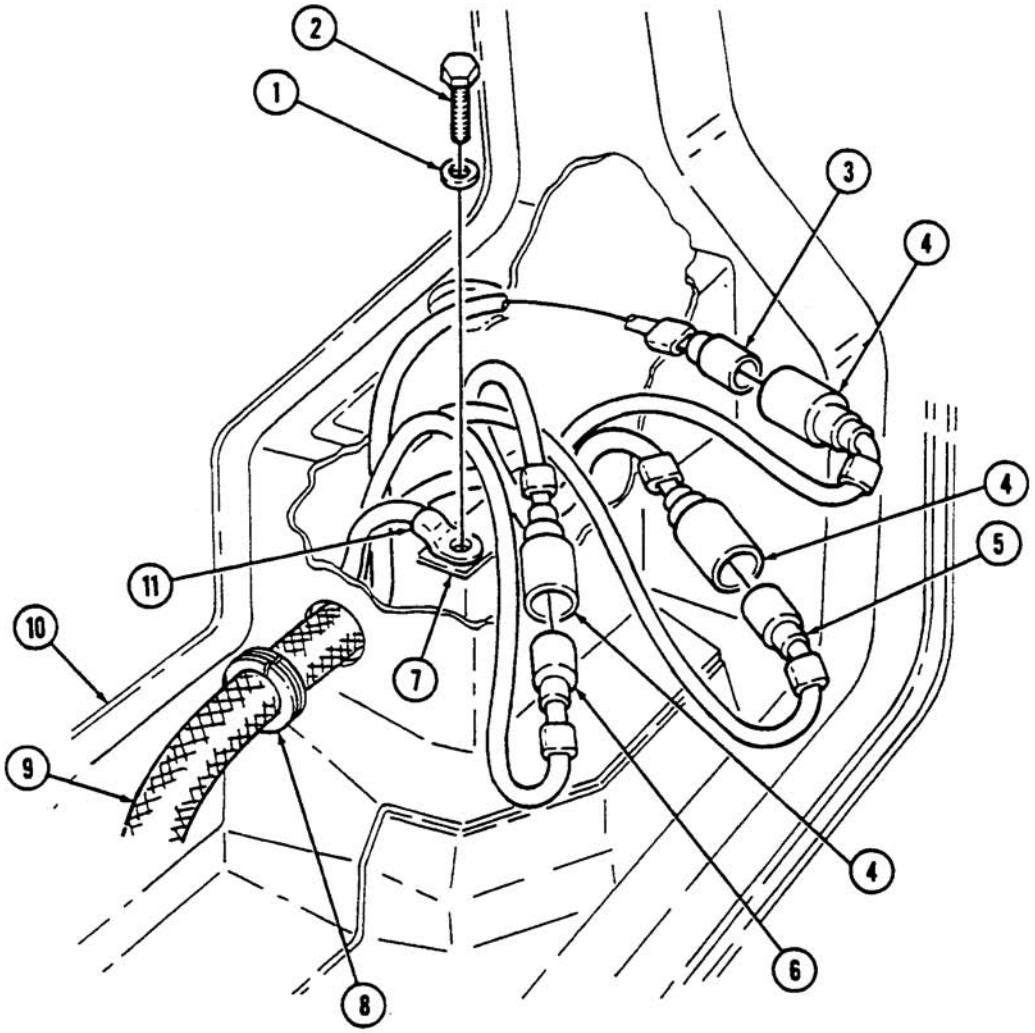

4-79. HOOD JUMPER WIRING HARNESS REPLACEMENT (Cont'd)

12. Connect left and right side hood jumper wiring harness connector (12) to body harness connector (13).

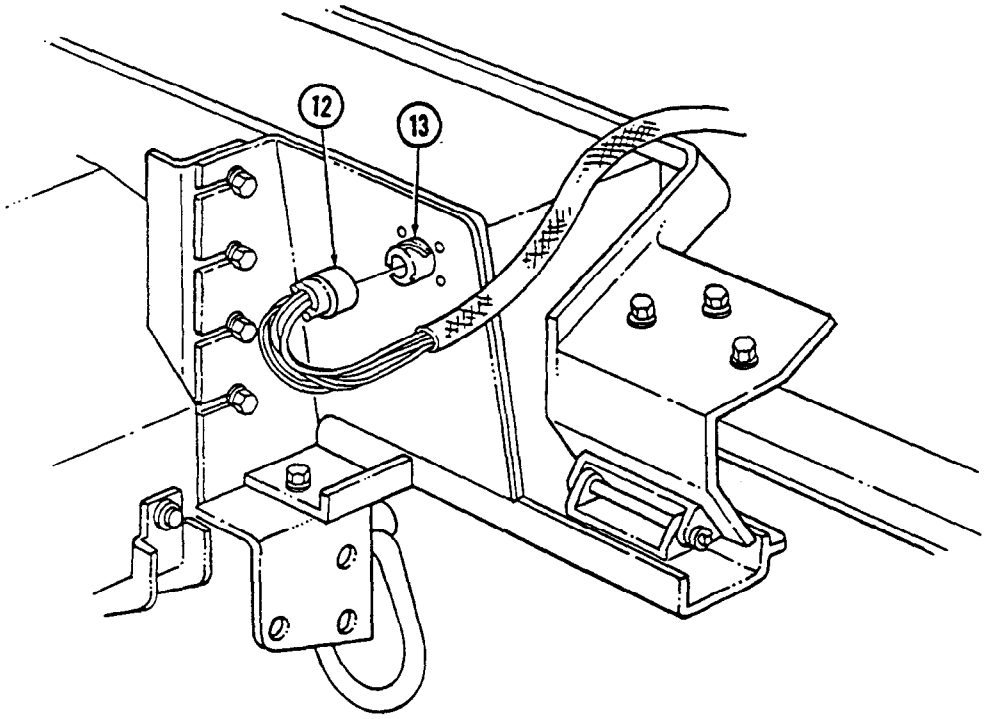

FOLLOW-ON TASKS:
- Install side marker light assembly (para. 4-56).
- Check front lights for proper operation (TM 9-2320-387-10).

4-80. WIRING HARNESS CONNECTOR REPAIR

This task covers:

a. Terminal-Type Cable Connector Repair
b. Male Cable Connector Repair
c. Female Cable Connector Repair
d. Connector Assembly Repair
e. Receptacle Assembly Repair
f. Protective Control Box Lower Cannon Plug Assembly Repair

INITIAL SETUP:

Tools
General mechanic's tool kit: automotive (Appendix B, Item 1)
Connector repair kit (Appendix B, Item 154)

Manual References
TB SIG-222
TM 9-2320-387-24P

Equipment Condition
Battery ground cables disconnected (para. 4-68).

General Safety Instructions
Remove all jewelry.

Maintenance Level
Unit

WARNING

Remove all jewelry such as rings, dog tags, bracelets, etc. If jewelry or disconnected battery ground cable contact battery terminal, a direct short can result, causing instant heating of tools, severe injury to personnel, or damage to equipment.

a. Terminal-Type Cable Connector Repair

1. Strip cable insulation (1) from cable (2) to equal depth of terminal well (4).
2. Slide insulator (3) over cable insulation (1).
3. Insert cable (2) into terminal well (4) and crimp.
4. Slide insulator (3) over crimped end of terminal (5) and apply heat to shrink insulator (3).

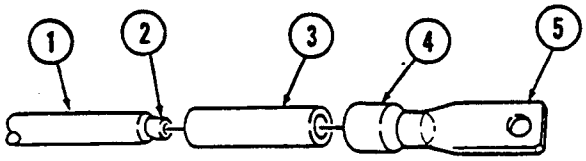

b. Male Cable Connector Repair

1. Strip cable insulation (6) from cable (7) to equal depth of terminal well (10).
2. Slide shell (8) over cable insulation (6).
3. Insert cable (7) into terminal well (10) and crimp.
4. Place slotted washer (9) over crimped junction at terminal (11).
5. Slide shell (8) over slotted washer (9) and terminal (11).

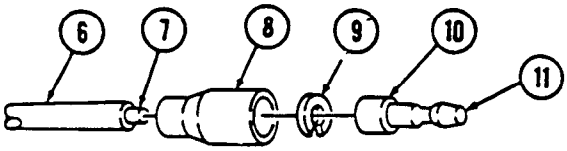

4-80. WIRING HARNESS CONNECTOR REPAIR (Cont'd)

c. Female Cable Connector Repair

1. Strip cable insulation (12) from cable (13) to equal depth of terminal well (16).
2. Slide shell (14) and sleeve (15) over cable insulation (12).
3. Insert cable (13) into terminal well (16) and crimp.
4. Slide shell (14) and sleeve (15) over terminal (17).

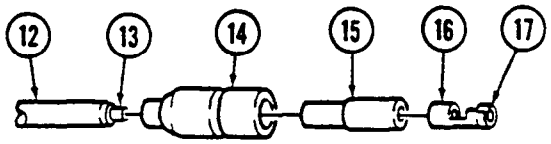

d. Connector Assembly Repair

NOTE

Refer to TB SIG-222 for soldering instructions.

1. Strip cable insulation (18) to depth of solder wells (21) on inserts (22).
2. Slide cable ends (25) through grommet retaining nut (19) and grommet (20).
3. Place cable ends (25) into solder wells (21) and solder.
4. Slide grommet (20) over inserts (22) and press into shell assembly (23) and coupling nut (24) until seated.
5. Screw grommet retaining nut (19) into shell assembly (23) until seated.

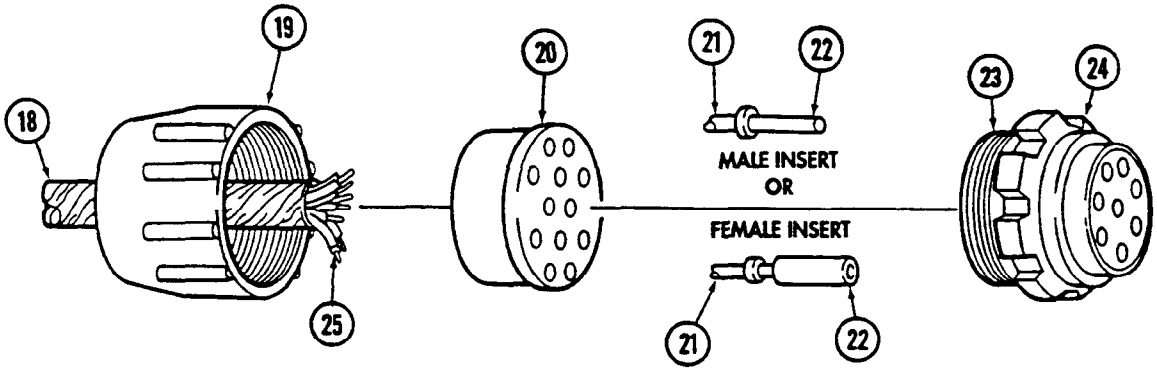

4-80. WIRING HARNESS CONNECTOR REPAIR (Cont'd)

e. Receptacle Assembly Repair

NOTE

Refer to TB SIG-222 for soldering instructions.

1. Strip cable insulation (1) to depth of solder wells (5) on inserts (6).
2. Slide cable ends (3) through grommet retaining nut (2) and grommet (4).
3. Place cable ends (3) into solder wells (5) and solder.
4. Slide grommet (4) over inserts (5) and press into receptacle (7) until seated.
5. Screw grommet retaining nut (2) into receptacle (7) until seated.

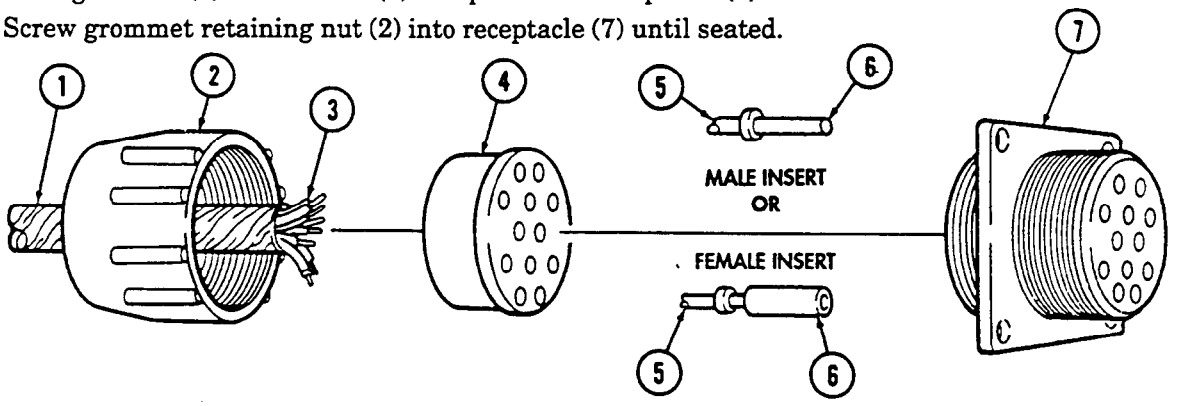

f. Protective Control Box Lower Cannon Plug Assembly Repair

1. Strip cable insulation (8) to depth of solder wells (16) on inserts (14).
2. Slide cable ends (10) through grommet retaining nut (9) and grommet (11).
3. Slide insulation sleeving (17) over lead 67A (18).
4. Place cable ends (10) into solder wells (16) and solder.

NOTE

Ensure insulation sleeving passes through grommet to provide a water-tight fit.

5. Slide insulation sleeving (17) up to solder well end (15), and heat-shrink insulation sleeving (17).
6. Slide grommet (11) over inserts (14) and press into shell assembly (12) and coupling nut (13) until seated.
7. Install grommet retaining nut (9) into shell assembly (12) until seated.

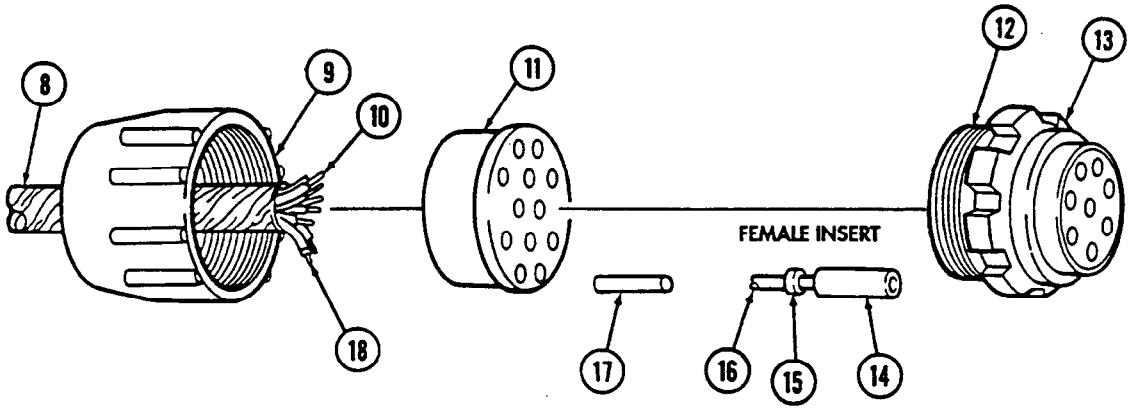

FOLLOW-ON TASK: Connect battery ground cables (para. 4-68).

CHAPTER 5
TRANSMISSION AND TRANSFER CASE (UNIT) MAINTENANCE

Section I. TRANSMISSION MAINTENANCE

5-1. TRANSMISSION MAINTENANCE TASK SUMMARY

TASK PARA.	PROCEDURES	PAGE NO.
5-2.	Transmission Service	5-2
5-3.	Transmission Oil Cooler Lines Replacement	5-6
5-4.	Transmission Bypass Valve Replacement	5-12
5-5.	Transmission Oil Dipstick Tube Replacement	5-14
5-6.	Neutral Start Switch Replacement	5-16
5-7.	Shift Controls Housing Assembly Replacement	5-18
5-8.	Shift Controls Housing Assembly Maintenance	5-20
5-9.	Transmission Shift Rod Maintenance	5-22
5-10.	Transmission Vent Line Replacement	5-24
5-11.	Sealed Lower Converter Housing Cover Maintenance	5-26
5-12.	Sealed Upper Converter Housing Cover (2-Piece) Maintenance	5-28
5-13.	Transmission Mount Replacement	5-30
5-14.	Transmission Road Test	5-31

5-2. TRANSMISSION SERVICE

This task covers:

a. Draining Fluid
b. Transmission Filter Removal
c. Transmission Filter Installation
d. Replenishing Fluid

INITIAL SETUP:

Tools

General mechanic's tool kit: automotive (Appendix B, Item 1)
Maintenance and repair shop equipment: automotive (Appendix B, Item 2)

Materials/Parts

Filter assembly (Appendix G, Item 201) (1996 only)
Filter assembly (Appendix G, Item 201.1) (1997 and above)
Transmission oil pan gasket (Appendix G, Item 47)
Two locknuts (Appendix G, Item 102)
Transmission fluid (Appendix C, Item 37)
Drycleaning solvent (Appendix C, Item 26)

Manual References

TM 9-2320-387-10
TM 9-2320-387-24P

General Safety Instructions

Drycleaning solvent is flammable and will not be used near an open flame.

Maintenance Level

Unit

a. Draining Fluid

NOTE

- Do not shift through driving gear ranges when warming transmission fluid for removal. Shifting through driving gear ranges is a procedure used only when refilling transmission fluid.
- Transmission should be warm when draining fluid.
- Have drainage container ready to catch fluid.
- Transmission uses two different filter assemblies based on model year. Ensure correct model year for proper filter application.

1. Remove drainplug (1) and gasket (2) from oil pan (3). Allow fluid to drain.

NOTE

Inspect fluid for grit, foaminess, and/or milkiness. If present, refer to DS maintenance (chapter 14).

2. Install gasket (2) and drainplug (1) in oil pan (3) and tighten drainplug (1) to 20 lb-ft (27 N·m).

5-2. TRANSMISSION SERVICE (Cont'd)

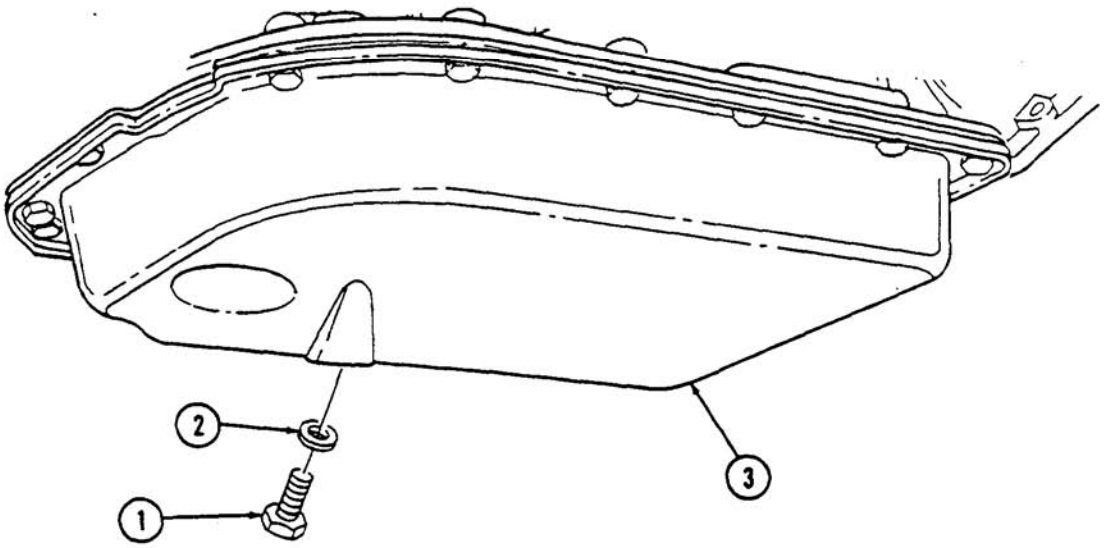

5-2. TRANSMISSION SERVICE (Cont'd)

b. Transmission Filter Removal

CAUTION

Transfer case must be supported during removal and installation of crossmember for access to oil pan capscrew and to prevent damage to equipment.

1. Place support under transfer case and remove two locknuts (3), washers (2), capscrews (6), and crossmember (4) from support brackets (1) and (5). Discard locknuts (3).

NOTE

Oil pan gasket is reusable. Discard only if damaged.

2. Remove seventeen capscrews (12), oil pan (11), and gasket (10) from transmission (7).
3. Remove magnet (9) from oil pan (11). Remove filter (8) from transmission (7).

WARNING

Drycleaning solvent is flammable and will not be used near an open flame. A fire extinguisher will be kept nearby when the solvent is used. Use only in well-ventilated places. Failure to do this may result in injury to personnel and/or damage to equipment.

4. Clean oil pan (11) thoroughly with drycleaning solvent.

c. Transmission Filter Installation

1. Install filter (8) in transmission (7). Install magnet (9) in oil pan (11).
2. Install gasket (10) and oil pan (11) on transmission (7) with seventeen capscrews (12). Tighten capscrews (12) to 18 lb-ft (24 N·m).
3. Install crossmember (4) on support brackets (1) and (5) with two capscrews (6), washers (2), and locknuts (3). Tighten locknuts (3) to 90 lb-ft (122 N·m).
4. Remove support from transfer case.

d. Replenishing Fluid

1. Remove transmission oil dipstick (14) from dipstick tube (13).
2. Check transmission fluid and fill to proper level (TM 9-2320-387-10).
3. Install transmission oil dipstick (14) in dipstick tube (13).

5-2. TRANSMISSION SERVICE (Cont'd)

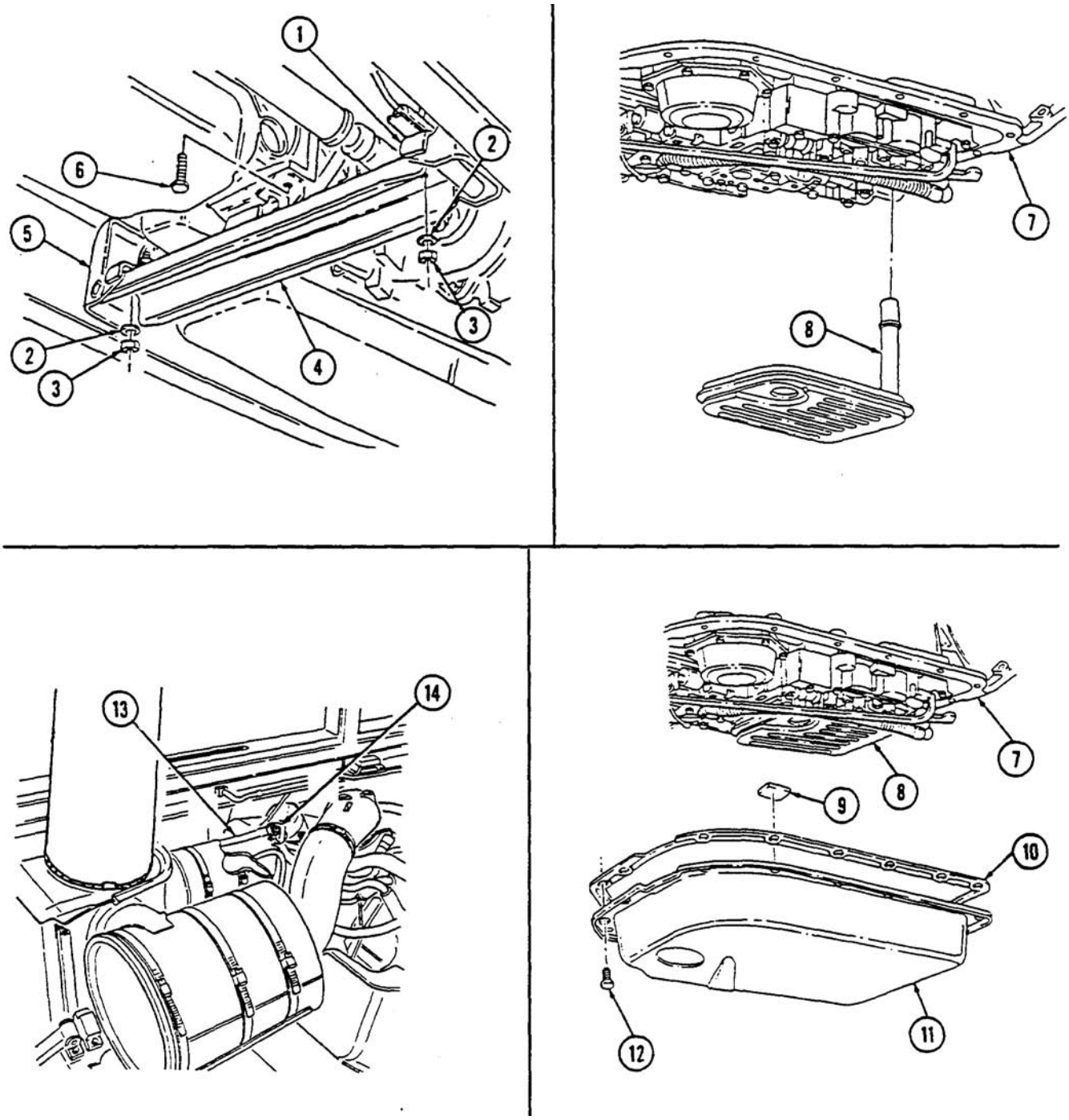

FOLLOW-ON TASK: Start engine (TM 9-2320-387-10) and check for leaks.

5-3. TRANSMISSION OIL COOLER LINES REPLACEMENT

This task covers:

a. Rear Lines Removal
b. Rear Lines Installation
c. Front Lines Removal
d. Front Lines Installation

INITIAL SETUP:

Tools

General mechanic's tool kit: automotive (Appendix B, Item 1)

Materials/Parts

Three locknuts (Appendix G, Item 77)
Two locknuts (Appendix G, Item 106)

Manual References

TM 9-2320-387-10
TM 9-2320-387-24P

Equipment Condition

- Right splash shield removed (front lines) (para. 10-24).
- Hood removed (para. 10-7).

General Safety Instructions

Allow transmission to cool before performing this task.

Maintenance Level

Unit

WARNING

Allow transmission to cool before performing this task. Severe injury to personnel may result.

CAUTION

Cover or plug all open lines and connections immediately after disconnection to prevent contamination. Remove all plugs prior to connection.

a. Rear Lines Removal

1. Remove two locknuts (32), washers (33), capscrews (4), and washers (5) from four retaining clamps (6) and cooler lines (7) and (31). Discard locknuts (32).
2. Loosen two clamps (1) and disconnect hoses (2) from transfer case (34).

NOTE

Have drainage container ready to catch fluid.

3. Loosen clamps (16) and (19) and disconnect hoses (15) and (20) from lines (17) and (18) and allow fluid to drain.
4. Loosen clamps (22) and (24) and disconnect hoses (21) and (29) from bypass valve (23).
5. Disconnect lines (7) and (8) from transmission (30).
6. Remove lines and hoses as an assembly from vehicle.
7. Loosen two clamps (3) and remove hoses (2) from lines (7) and (31). Remove two clamps (1) and (3) from hoses (2).
8. Loosen hose clamps (12), (14), (25), (26), (27), and (28).
9. Remove hose (9) from line (31) and tee (10). Remove two clamps (28) from hose (9).
10. Remove hose (11) from line (8) and tee (13). Remove clamps (12) from hose (11).
11. Remove hoses (15) and (20) from tees (10) and (13). Remove clamps (14), (16), (19), and (26) from hoses (15) and (20).
12. Remove hoses (21) and (29) from tees (10) and (13). Remove clamps (22), (24), (25), and (27) from hoses (21) and (29).

5-3. TRANSMISSION OIL COOLER LINES REPLACEMENT (Cont'd)

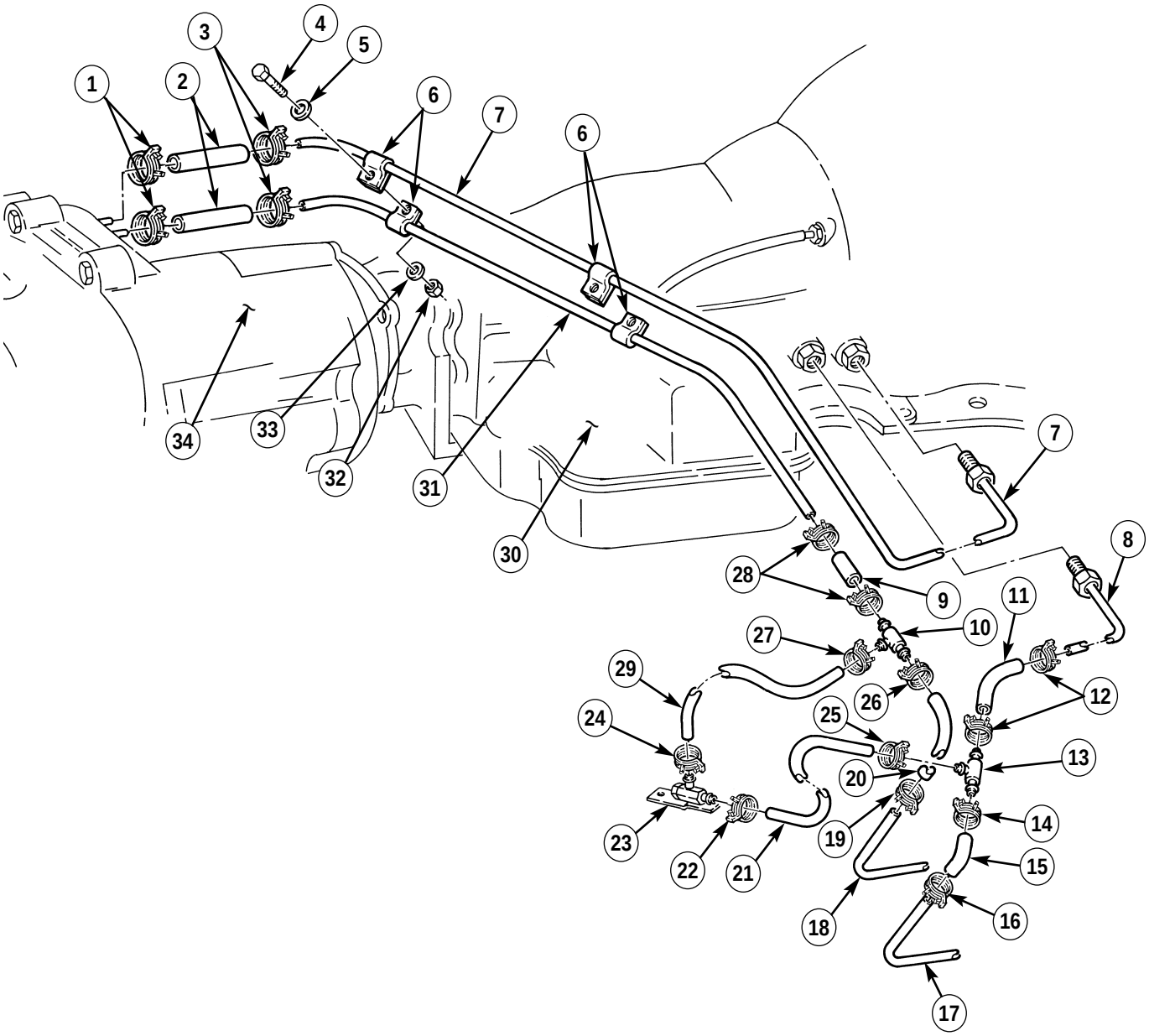

5-3. TRANSMISSION OIL COOLER LINES REPLACEMENT (Cont'd)

b. Rear Lines Installation

1. Install clamps (22), (24), (25), and (27) on hoses (21) and (29). Install hoses (21) and (29) on tees (10) and (13).
2. Install clamps (14), (16), (19), and (26) on hoses (15) and (20). Install hoses (15) and (20) on tees (10) and (13).
3. Install two clamps (12) on hose (11). Install hose (11) on line (8) and tee (13).
4. Install two clamps (28) on hose (9). Install hose (9) on line (31) and tee (10).
5. Install two clamps (1) and (3) on two hoses (2). Install hoses (2) on lines (7) and (31).
6. Install lines and hoses as an assembly on vehicle and connect lines (7) and (8) to transmission (30).
7. Connect hoses (2) to transfer case (34).
8. Connect hoses (21) and (29) to bypass valve (23).
9. Connect hoses (15) and (20) to lines (17) and (18).
10. Install two washers (5), capscrews (4), washers (33), and locknuts (32) on four retaining clamps (6) and cooler lines (7) and (31).

5-3. TRANSMISSION OIL COOLER LINES REPLACEMENT (Cont'd)

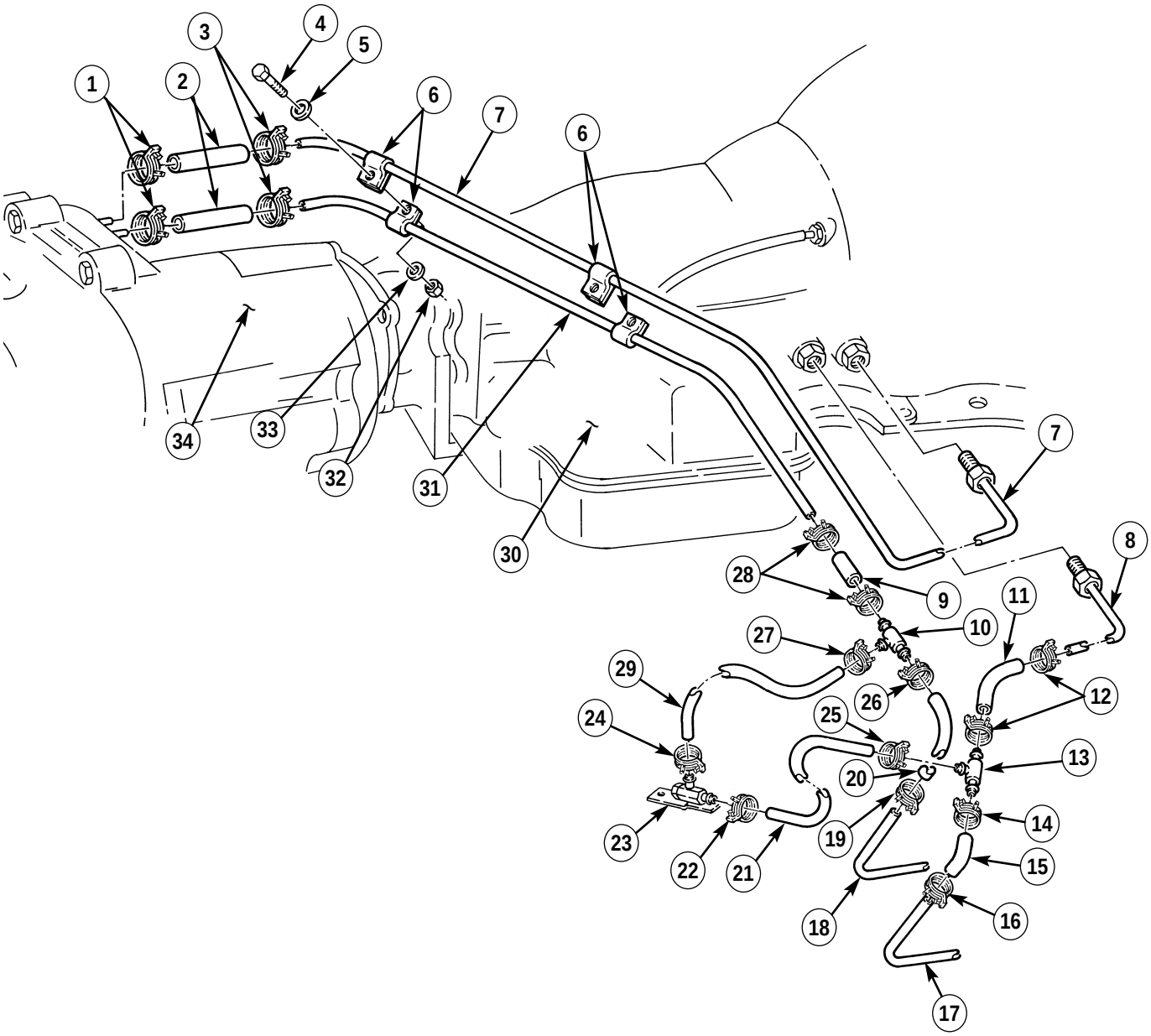

5-3. TRANSMISSION OIL COOLER LINES REPLACEMENT (Cont'd)

c. Front Lines Removal

. 1. Remove two locknuts (15), washers (16), capscrews (21), and washers (20) from right radiator support (2) and airlift bracket (22). Discard locknuts (15).
2. Loosen locknut (1) and swing up radiator support (2).
3. Remove locknut (14), washer (13), capscrew (9), washer (10), and capscrews (18) and (27) from clamps (11) and (12), two clamps (17), bracket (19), four clamps (26), and frame (23).
4. Loosen two clamps (25) and disconnect hoses (24) from lines (7) and (8).
5. Loosen two clamps (4) and (6) and remove hoses (5) from oil cooler (3) and lines (7) and (8).
6. Remove clamps (4) and (6) from hoses (5).
7. Remove cooler lines (7) and (8) from vehicle.

d. Front Lines Installation

1. Install cooler lines (7) and (8) on vehicle.
2. Install two clamps (4) and (6) on hoses (5) and install hoses (5) on lines (7) and (8).
3. Connect hoses (5) to oil cooler (3).
4. Connect two hoses (24) to lines (7) and (8) and tighten clamps (25).
5. Install four clamps (26) and cooler lines (7) and (8) on frame (23) with two capscrews (27).
6. Install two clamps (17) and lines (7) and (8) on bracket (19) with capscrew (18).
7. Install clamps (11) and (12) on cooler lines (7) and (8) with washer (10), capscrew (9), washer (13), and locknut (14).
8. Swing radiator support (2) down and install on airlift bracket (22) with two washers (20), capscrews (21), washers (16), and locknuts (15).
9. Tighten locknut (1).

5-3. TRANSMISSION OIL COOLER LINES REPLACEMENT (Cont'd)

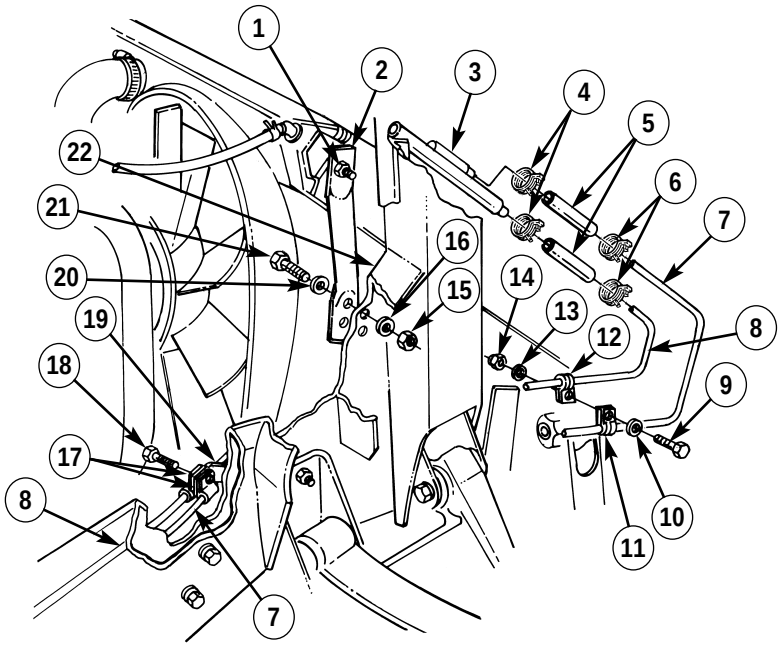

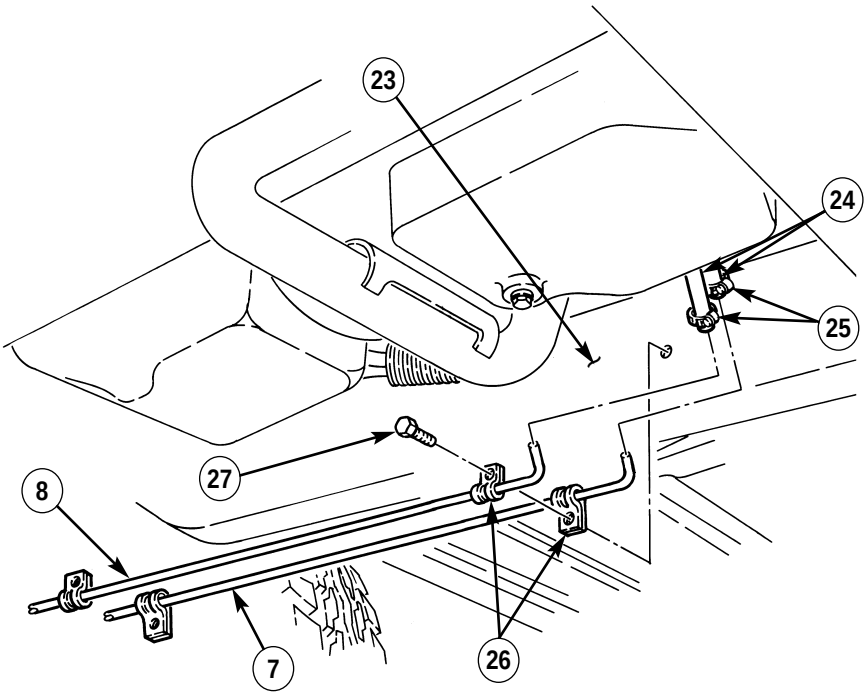

FOLLOW-ON TASKS:
- Fill transmission to proper level (TM 9-2320-387-10).
- Start engine (TM 9-2320-387-10) and check for leaks.
- Install right splash shield (front lines) (para. 10-24).
- Install hood (para. 10-7).

5-4. TRANSMISSION BYPASS VALVE REPLACEMENT

This task covers:

a. Removal **b. Installation**

INITIAL SETUP:

Tools

General mechanic's tool kit:
automotive (Appendix B, Item 1)
Maintenance and repair shop equipment:
automotive (Appendix B, Item 2)

Materials/Parts

Locknut (Appendix G, Item 102)

Manual Reference

TM 9-2320-387-10
TM 9-2320-387-24P

General Safety Instructions

Allow transmission to cool before performing this task.

Maintenance Level

Unit

WARNING

Allow transmission to cool before performing this task. Severe injury to personnel may result.

CAUTION

Cover or plug all open lines and connections immediately after disconnection to prevent contamination. Remove all plugs prior to connection.

a. Removal

1. Loosen hose clamps (1) and (8) on rubber hoses (2) and (9).

NOTE

Have drainage container ready to catch fluid.

2. Disconnect rubber hoses (2) and (9) from bypass valve (3).
3. Remove locknut (7), washer (5), capscrew (4), washer (5), and bypass valve (3) from transmission crossmember (6). Discard locknut (7).

b. Installation

1. Install bypass valve (3) on transmission crossmember (6) with washer (5), capscrew (4), washer (5), and locknut (7). Tighten locknut (7) to 90 lb-ft (122 N·m).
2. Connect rubber hoses (2) and (9) to bypass valve (3) and tighten clamps (1) and (8).

5-4. TRANSMISSION BYPASS VALVE REPLACEMENT (Cont'd)

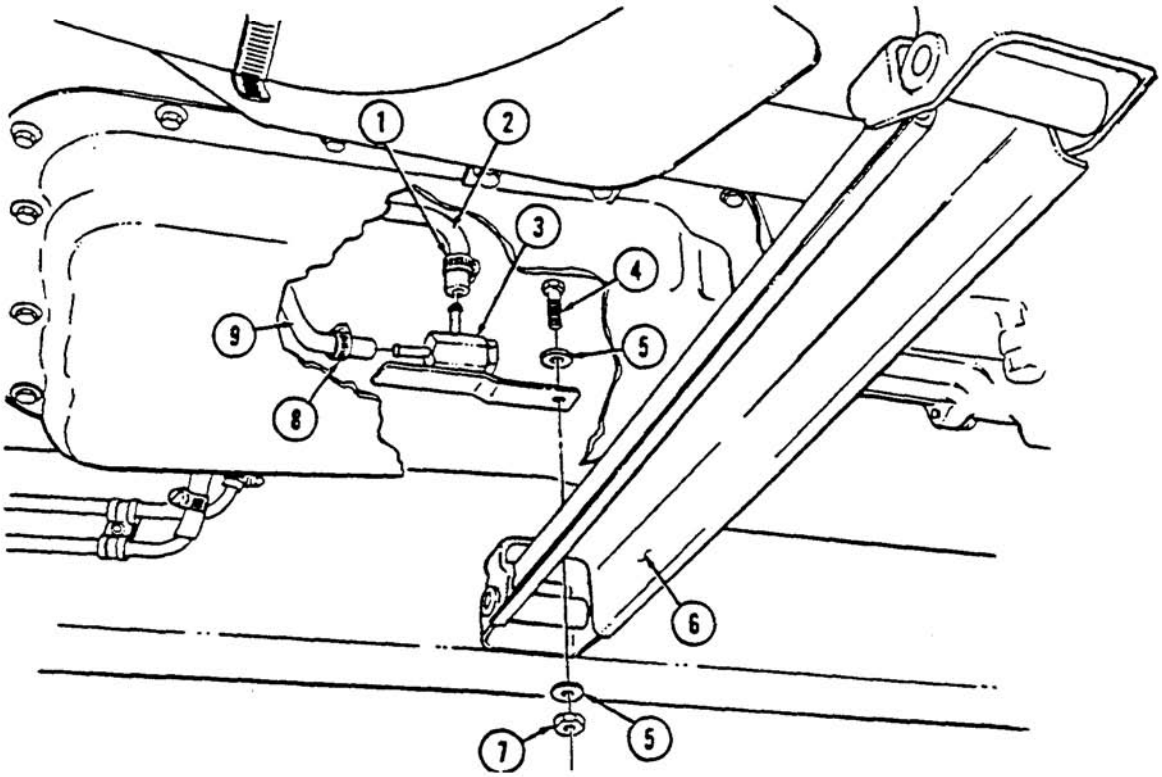

FOLLOW-ON TASKS:
- Fill transmission to proper level (TM 9-2320-387-10).
- Start engine (TM 9-2320-387-10) and check for leaks.

5-5. TRANSMISSION OIL DIPSTICK TUBE REPLACEMENT

This task covers:

a. Removal **b. Installation**

INITIAL SETUP:

Tools

General mechanic's tool kit: automotive (Appendix B, Item 1)
Maintenance and repair shop equipment: automotive (Appendix B, Item 2)

Manual References

TM 9-2320-387-10
TM 9-2320-387-24P

Equipment Condition

- Hood raised and secured (TM 9-2320-387-10).
- Engine access cover removed (para. 10-22).

Maintenance Level

Unit

NOTE

- Plug open transmission port to prevent contamination. Remove plug prior to installation of oil dipstick tube.
- Have drainage container ready to catch fluid.

a. Removal

1. Remove transmission oil dipstick (5) from dipstick tube (6).
2. Remove capscrew (11) from dipstick tube (6) and right rear heat shield (9).
3. Remove two capscrews (8) and right rear heat shield (9) from right exhaust manifold heat shield (7) and rear heat shield (1).
4. Remove nut (2), washer (3), dipstick tube (6), and washer (3) from manifold stud (4).
5. Remove dipstick tube (6) from transmission (10).

b. Installation

1. Install dipstick tube (6) into transmission (10).
2. Install washer (3) and dipstick tube (6) on manifold stud (4) with washer (3) and nut (2).
3. Install right rear heat shield (9) on right exhaust manifold heat shield (7) and rear heat shield (1) with two capscrews (8).
4. Install dipstick tube (6) on right rear heat shield (9) with capscrew (11). Tighten capscrew (11) to 25-37 lb-ft (34-50 N·m).
5. Install transmission oil dipstick (5) into dipstick tube (6).

5-5. TRANSMISSION OIL DIPSTICK TUBE REPLACEMENT (Cont'd)

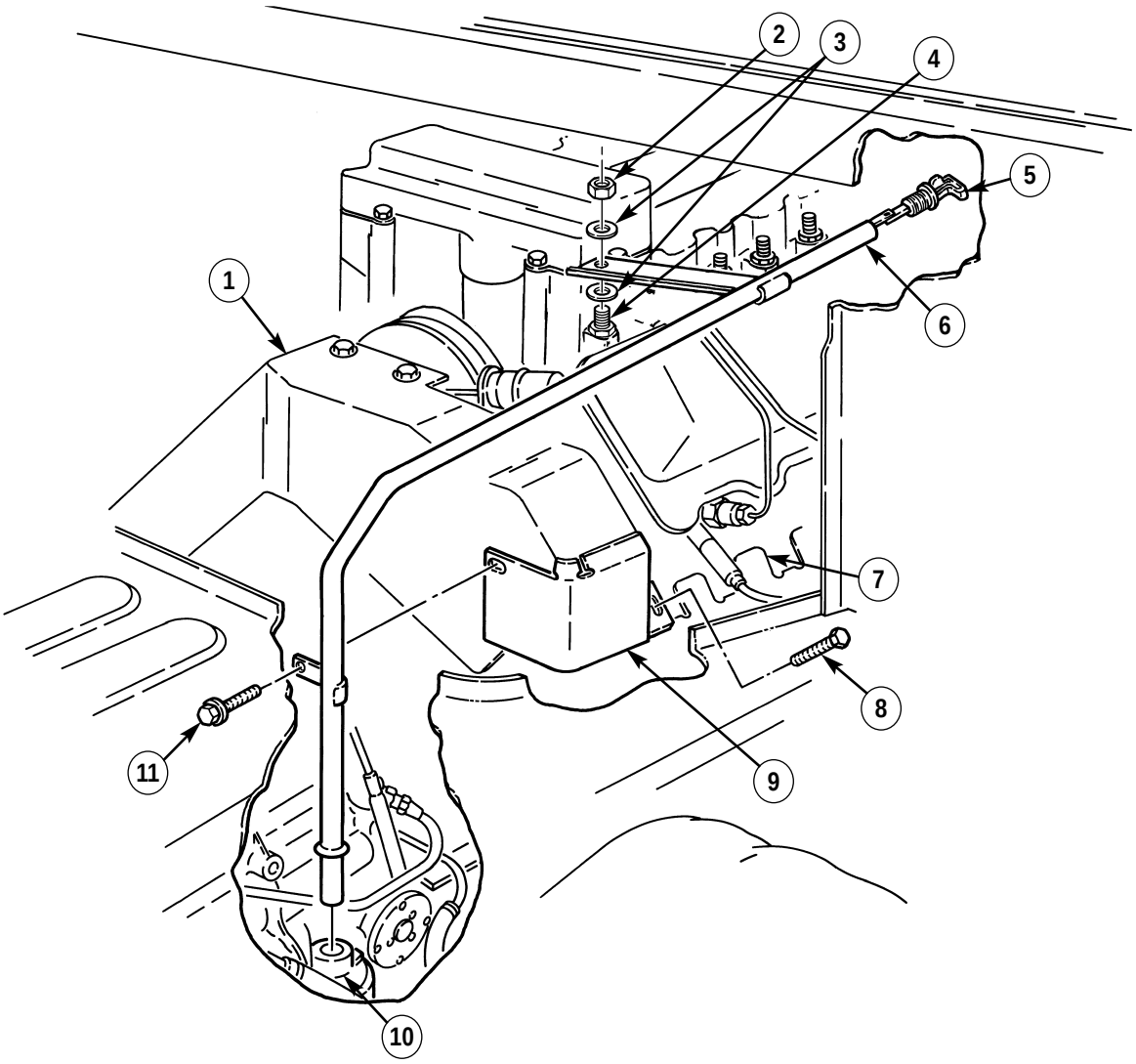

FOLLOW-ON TASKS:
- Install engine access cover (para. 10-22).
- Fill transmission to proper level (TM 9-2320-387-10).
- Lower and secure hood (TM 9-2320-387-10).
- Start engine (TM 9-2320-387-10) and check for leaks.

5-6. NEUTRAL START SWITCH REPLACEMENT

This task covers:

a. Removal **b. Installation**

INITIAL SETUP:

Tools
General mechanic's tool kit:
automotive (Appendix B, Item 1)

Manual References
TM 9-2320-387-10
TM 9-2320-387-24P

Equipment Condition
Shift controls housing assembly removed (para. 5-7).

Maintenance Level
Unit

NOTE
Prior to removal, tag leads for installation.

a. Removal

1. Remove boot (5) from shift controls housing (1).
2. Remove two screws (3) and neutral start switch (2) from housing (1).

b. Installation

1. Install neutral start switch (2) on shift controls housing (1) with two screws (3).
2. Position neutral start switch leads 14 (4) and selector indicator lead 17J (6) through boot (5), and install boot (5) on housing (1).

5-6. NEUTRAL START SWITCH REPLACEMENT (Cont'd)

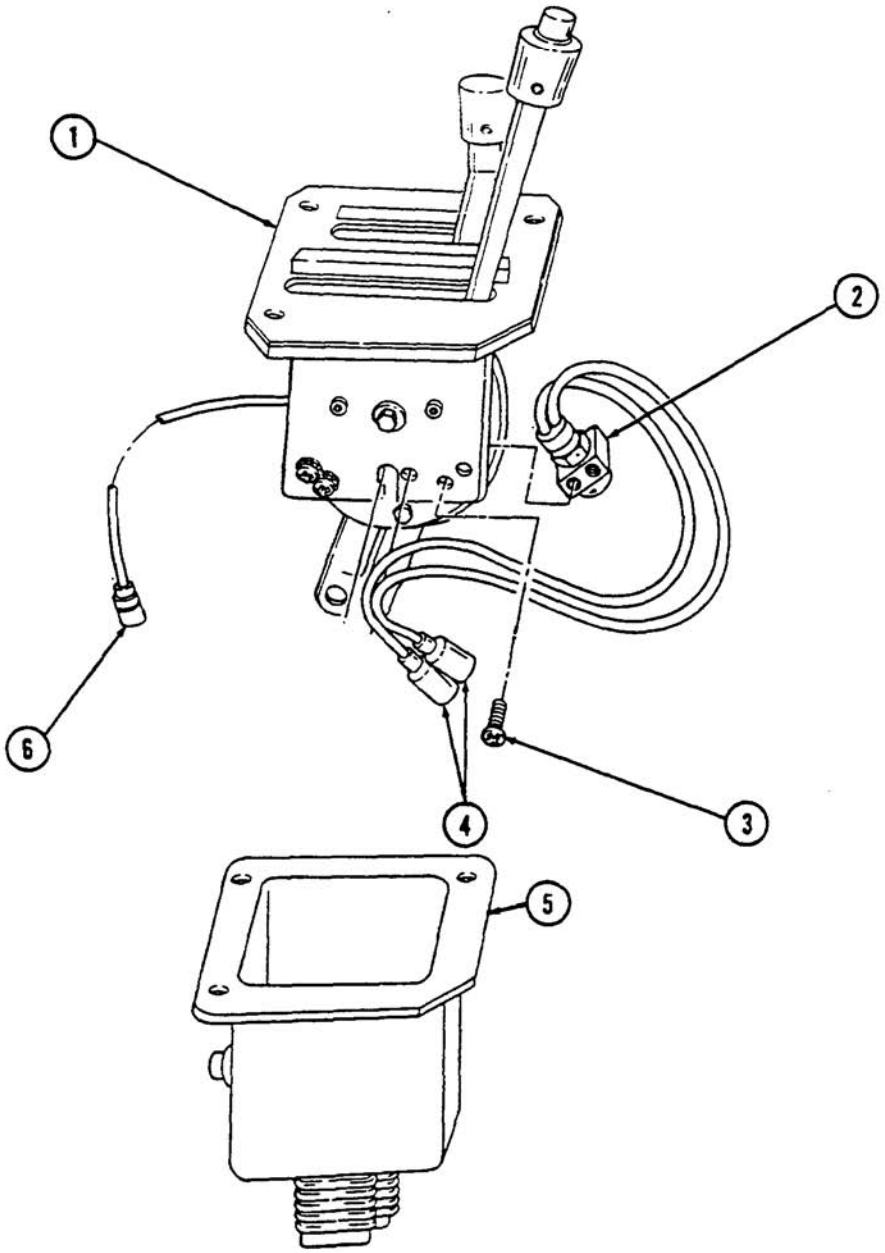

FOLLOW-ON TASKS:
- Install shift controls housing assembly (para. 5-7).
- Check neutral start switch for proper operation (TM 9-2320-387-10).

5-7. SHIFT CONTROLS HOUSING ASSEMBLY REPLACEMENT

This task covers:

a. Removal **b. Installation**

INITIAL SETUP:

Tools

General mechanic's tool kit:
automotive (Appendix B, Item 1)
Maintenance and repair shop equipment:
automotive (Appendix B, Item 2)

Materials/Parts

Two cotter pins (Appendix G, Item 19)
Four locknuts (Appendix G, Item 77)

Personnel Required

One mechanic
One assistant

Manual References

TM 9-2320-387-10
TM 9-2320-387-24P

Equipment Condition

Battery ground cables disconnected (para. 4-68).

Maintenance Level

Unit

a. Removal

NOTE

If shift controls housing assembly is to be reinstalled, tape trunnions to shift rod to prevent loss of adjustment. Transfer case shift rod trunnion is removed from shift rod only if damaged or shift rods are replaced.

1. Remove cotter pin (5), washer (6), trunnion (9), and rub strip (8) from transmission shift lever arm (10). Discard cotter pin (5).
2. Remove cotter pin (2), washer (3), trunnion (4), and rub strip (7) from transfer case shift arm (1). Discard cotter pin (2).

NOTE

Tag leads for installation.

3. Disconnect two body harness leads 14A/14B (14) from neutral start switch leads 14 (19).
4. Disconnect body harness lead (17) from shift selector indicator lead 17J (18).
5. Remove four locknuts (15), washers (16), capscrews (20), and shift controls housing assembly (12) from body (13). Discard locknuts (15).

b. Installation

1. Position shift controls housing assembly (12) in body (13) with transmission lever (11) on right, and install with four capscrews (20), washers (16), and locknuts (15). Tighten locknuts (15) to 6 lb-ft (8 N•m).
2. Connect two body harness leads 14A/14B (14) to neutral start switch leads 14 (19).
3. Connect body harness lead (17) to shift selector indicator lead 17J (18).
4. Install rub strip (7) and trunnion (4) on transfer case shift arm (1) with washer (3) and cotter pin (2).
5. Install rub strip (8) and trunnion (9) on transmission shift lever arm (10) with washer (6) and cotter pin (5).

5-7. SHIFT CONTROLS HOUSING ASSEMBLY REPLACEMENT (Cont'd)

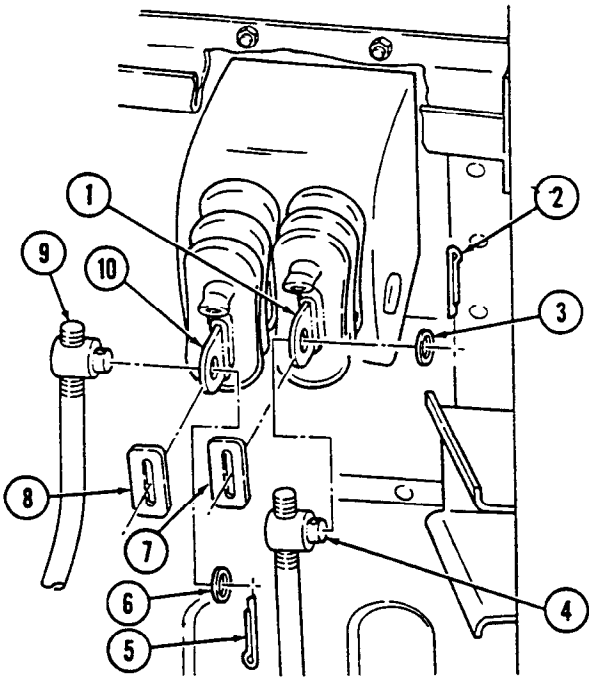

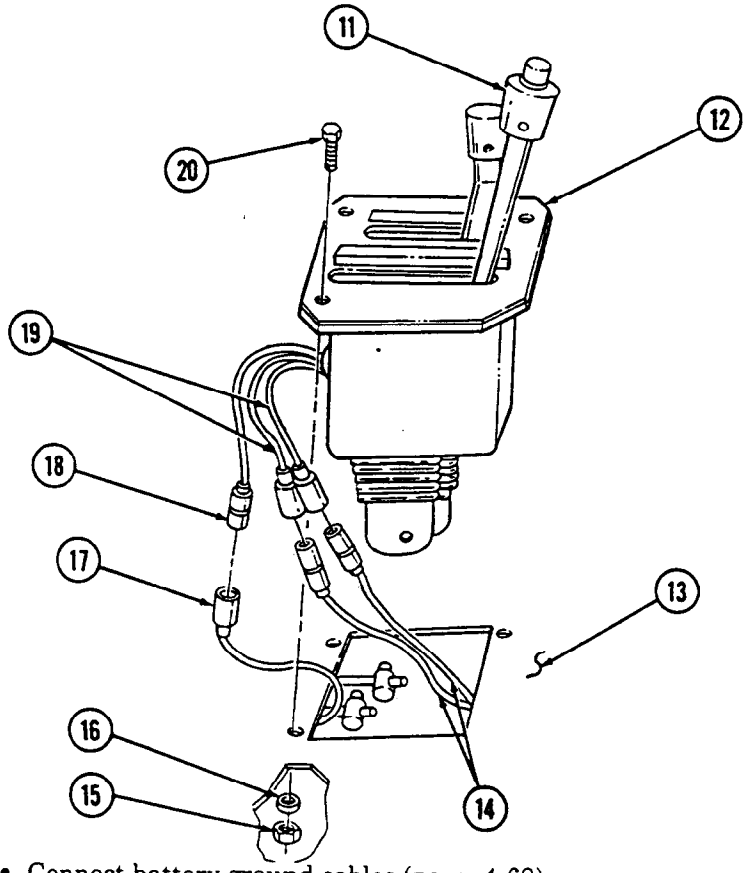

FOLLOW-ON TASK:
- Connect battery ground cables (para. 4-68).
- Start engine (TM 9-2320-387-10) and check shift controls for proper operation. Adjust as needed (paras. 5-9 and 5-16).

5-8. SHIFT CONTROLS HOUSING ASSEMBLY MAINTENANCE

This task covers:

a. Disassembly

b. Assembly

INITIAL SETUP:

Tools
General mechanic's tool kit: automotive (Appendix B, Item 1)

Manual References
TM 9-2320-387-24P

Equipment Condition
Shift controls housing assembly removed (para. 5-7).

Maintenance Level
Unit

a. Disassembly

1. Remove pin (4) and knob (3) from transfer case shift tube (2).
2. Remove pin (6) and knob (5) from transmission shift tube (7).
3. Remove neutral start switch leads (9) from openings in boot (8).
4. Remove shift indicator lead (10) from opening in boot (8).
5. Slide boot (8) off shift controls housing assembly (11).
6. Remove two transmission selector lens covers (1) from shift controls housing assembly (11).
7. Remove two fiber optic indicator strips (17) from bulbs (16).
8. Remove two bulbs (16) from sockets (15).
9. Remove four screws (14), cover plate (13), and gasket (12) from shift controls housing assembly (11).

b. Assembly

1. Install gasket (12) and cover plate (13) on shift controls housing assembly (11) with four screws (14).
2. Install two bulbs (16) in sockets (15).
3. Install two fiber optic indicator strips (17) on bulbs (16).
4. Install two transmission selector lens covers (1) on shift controls housing assembly (11).
5. Install boot (8) on shift controls housing assembly (11), placing neutral start switch and shift indicator leads (9) and (10) through openings in boot (8).
6. Complete sliding boot (8) onto shift controls housing assembly (11), ensuring mounting screw holes align.
7. Install knob (5) on transmission shift tube (7) with pin (6).
8. Install knob (3) on transfer case shift tube (2) with pin (4).

5-8. SHIFT CONTROLS HOUSING ASSEMBLY MAINTENANCE (Cont'd)

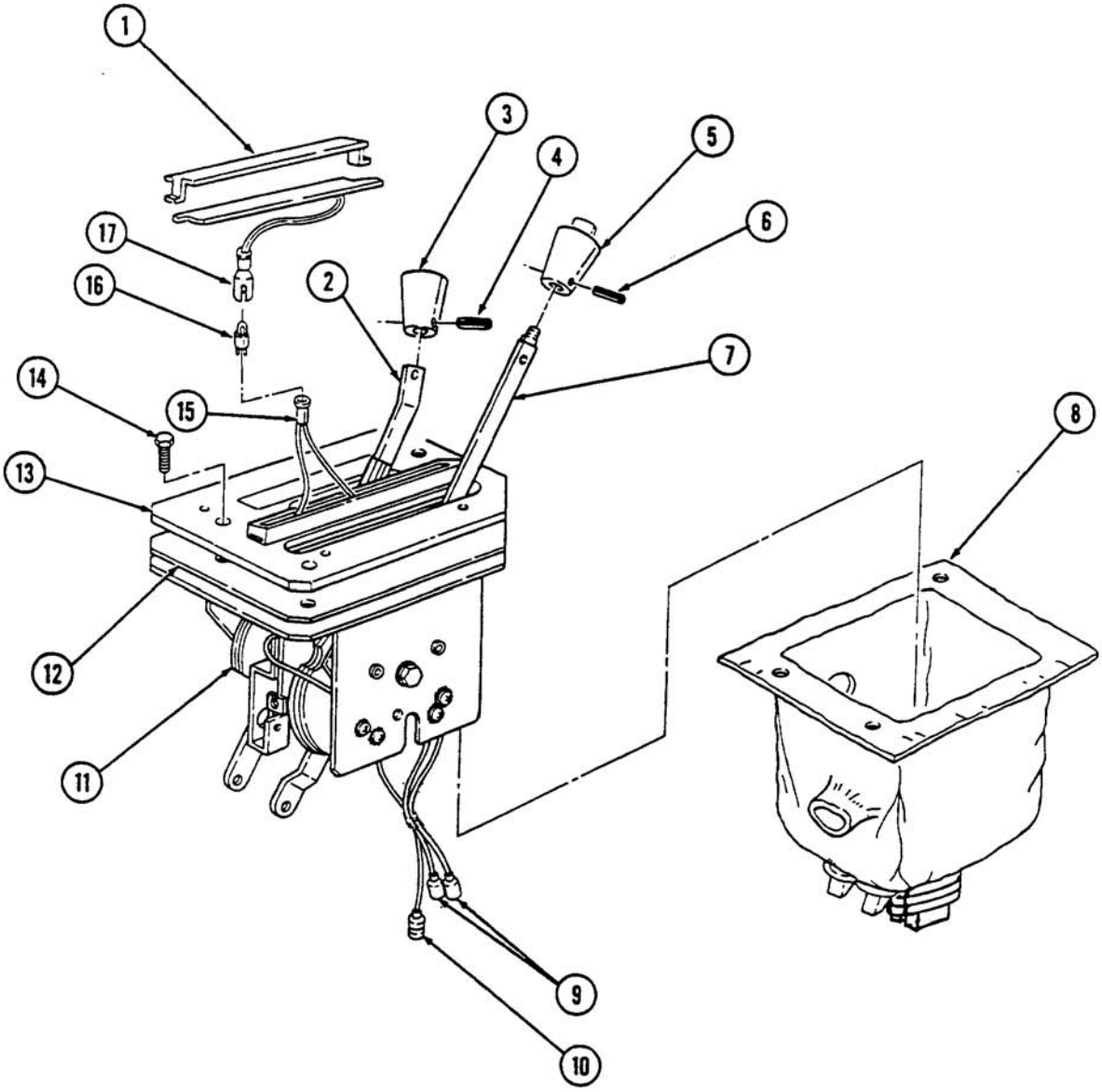

FOLLOW-ON TASK: Install shift controls housing assembly (para. 5-7).

5-9. TRANSMISSION SHIFT ROD MAINTENANCE

This task covers:

a. Removal
b. Installation
c. Adjustment

INITIAL SETUP:

Tools
General mechanic's tool kit:
automotive (Appendix B, Item 1)

Materials/Parts
Three cotter pins (Appendix G, Item 19)

Manual References
TM 9-2320-387-10
TM 9-2320-387-24P

Maintenance Level
Unit

a. Removal

1. Place transmission shift lever (7) in neutral.
2. Remove cotter pin (6), washer (5), trunnion (2), and rub strip (4) from shift arm (3). Discard cotter pin (6).
3. Remove cotter pin (13) and washer (12) from rear trunnion (9). Remove trunnion (9) and shift rod (8) from relay lever (11). Discard cotter pin (13).

NOTE

Mark position of rear trunnion on shift rod for installation.

4. Remove cotter pin (10) and trunnion (9) from shift rod (8). Discard cotter pin (10).

b. Installation

1. Install trunnion (9) on shift rod (8) to marked position with cotter pin (10).
2. Install trunnion (9) on relay lever (11) with washer (12) and cotter pin (13). Do not spread cotter pin (13).
3. Install rub strip (4) and trunnion (2) on shift arm (3) with washer (5) and cotter pin (6). Do not spread cotter pin (6).
4. Check shift rod (8) adjustment (task c.).

c. Adjustment

CAUTION

If the manual control linkage is not in proper detent for selector lever position, transmission will be damaged.

NOTE

Proper adjustment makes end of shift rod movement parallel to relay lever movement.

1. Move transmission shift lever (7) to 1 position and ensure lever (1) is in forward detent position 1 or LOW. If not, remove cotter pin (13) and washer (12). Turn trunnion (9) until trunnion (9) aligns with relay lever (11).
2. When adjustment is correct, spread cotter pins (6) and (13).

5-9. TRANSMISSION SHIFT ROD MAINTENANCE (Cont'd)

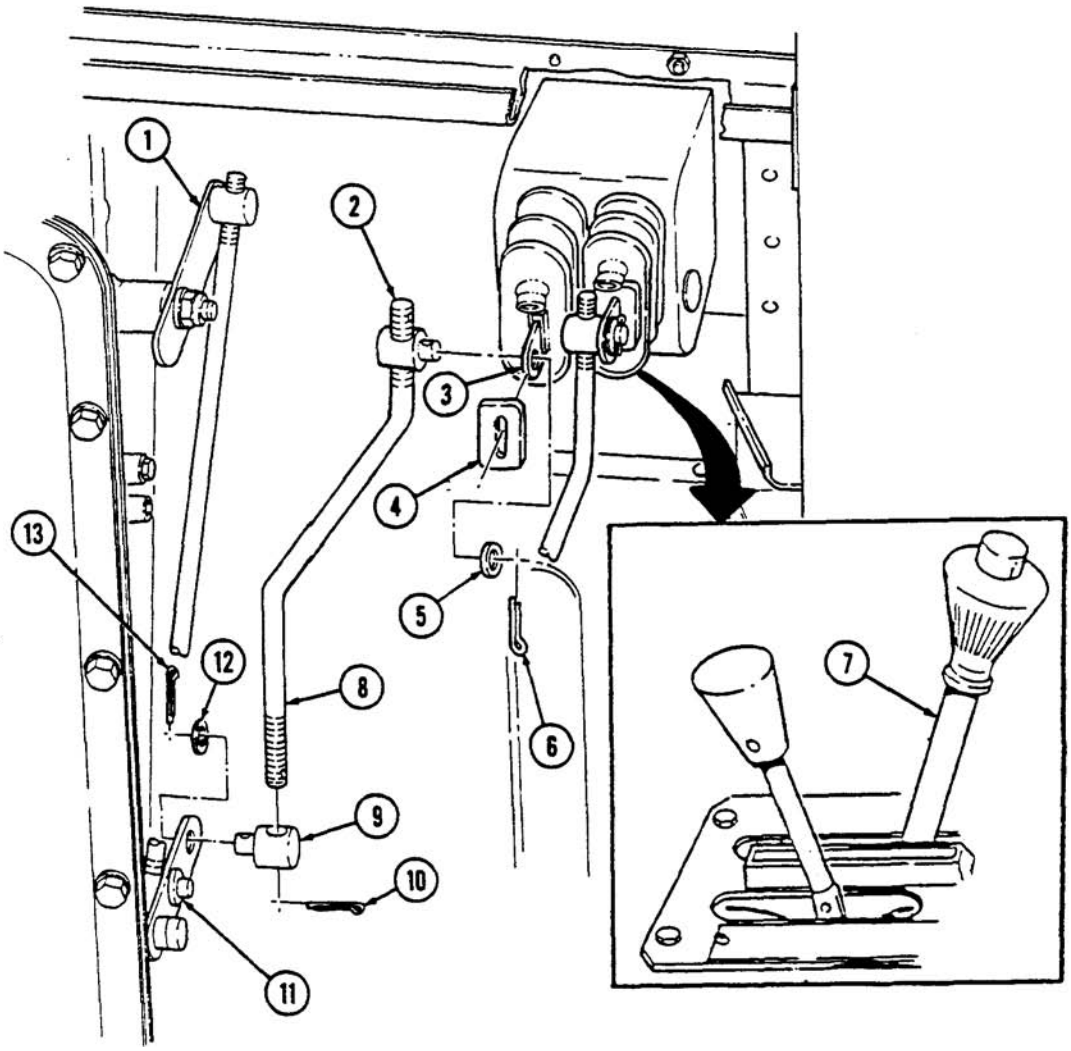

FOLLOW-ON TASK: Operate vehicle (TM 9-2320-387-10) and test transmission shift lever for proper operation.

5-10. TRANSMISSION VENT LINE REPLACEMENT

This task covers:

a. Removal **b. Installation**

INITIAL SETUP:

Tools
General mechanic's tool kit: automotive (Appendix B, Item 1)

Materials/Parts
Silicone compound (Appendix C, Item 74)

Manual References
TM 9-2320-387-24P

Maintenance Level
Unit

NOTE
Insulation may need to be removed to access vent lines.

a. Removal

1. Remove vent line (2) from transmission (3) and tee fitting (1).
2. Remove vent line (12) from tee fittings (1) and (11).
3. Remove capscrew (5), clamp (7), and vent line (10) from engine mount bracket (6).
4. Remove capscrew (4), clamp (8), and vent line (10) from bracket (9).
5. Remove vent line (10) from tee fittings (11) and (13).
6. Remove clamps (7) and (8) from vent line (10).

b. Installation

1. Install clamps (7) and (8) on vent line (10).
2. Apply RTV silicone compound to tee fittings (11) and (13), and install vent line (10) on tee fittings (11) and (13).
3. Install vent line (10) and clamp (7) on engine mount bracket (6) with capscrew (5).
4. Install vent line (10) and clamp (8) on bracket (9) with capscrew (4).
5. Apply RTV silicone compound to tee fittings (11) and (1), and install vent line (12) on tee fittings (11) and (1).
6. Apply RTV silicone compound to tee fitting (1) and transmission (3) and install vent line (2) on tee fitting (1) and transmission (3).
7. Install insulation if removed.

5-10. TRANSMISSION VENT LINE REPLACEMENT (Cont'd)

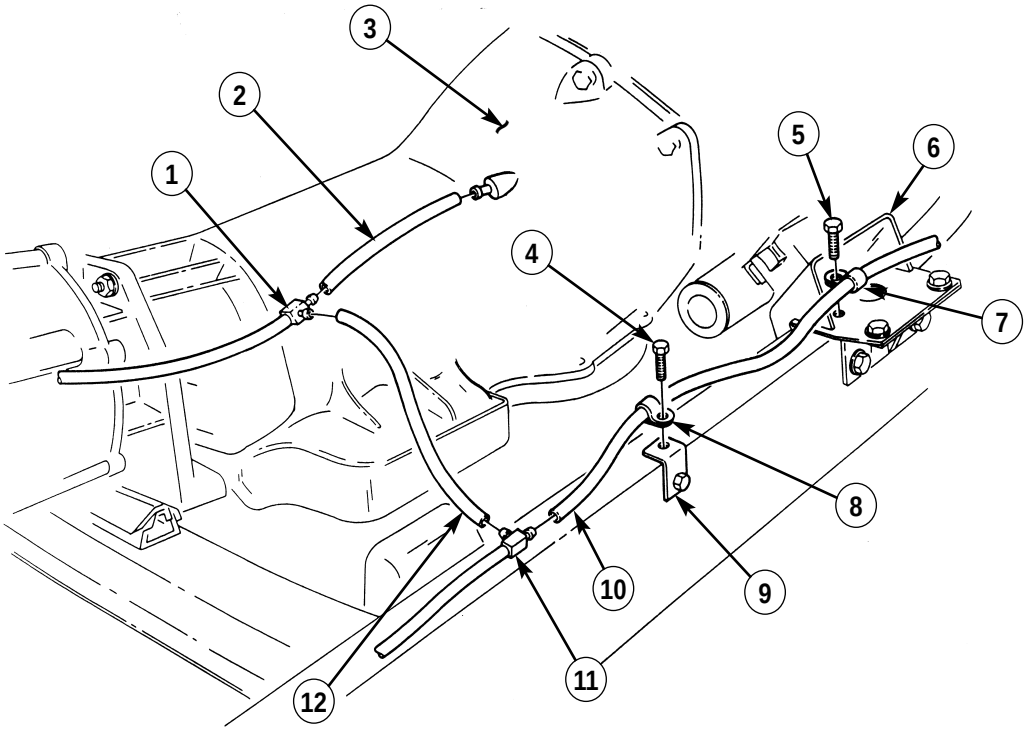

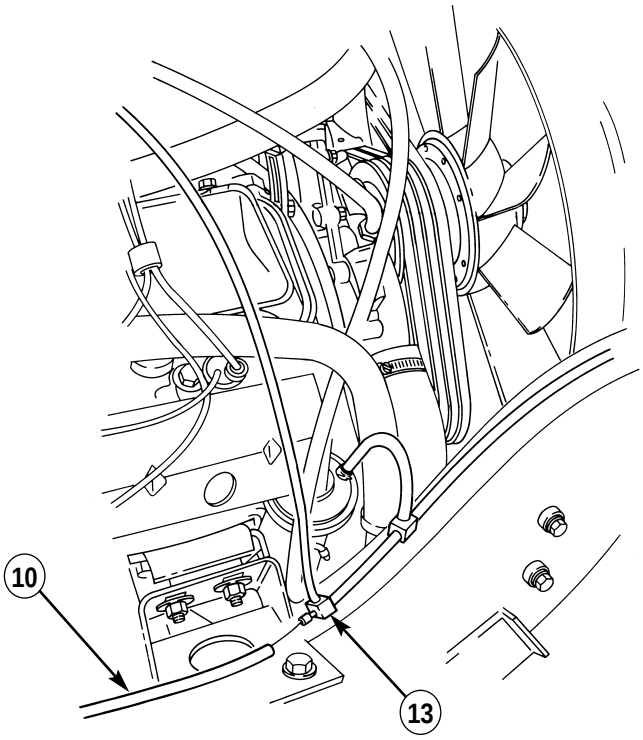

5-11. SEALED LOWER CONVERTER HOUSING COVER MAINTENANCE

This task covers:

a. Removal
b. Inspection
c. Installation

INITIAL SETUP:

Tools
General mechanic's tool kit: automotive (Appendix B, Item 1)

Materials/Parts
Gasket (Appendix G, Item 51)
Adhesive (Appendix C, Item 6)
Drycleaning solvent (Appendix C, Item 26)

Manual References
TM 9-2320-387-24P

Equipment Condition
- Exhaust pipe removed (para. 3-50).
- Sealed upper converter housing cover removed (para. 5-12).

General Safety Instructions
Drycleaning solvent is flammable and will not be used near an open flame.

Maintenance Level
Unit

a. Removal

1. Remove three capscrews (5) and converter housing cover (4) from transmission (2).
2. Remove gasket (3) from converter housing cover (4). Discard gasket (3).

b. Inspection

1. Inspect converter housing cover (4) for pitting, cracking, and excessive wear. Replace if pitted, cracked, or excessively worn.

WARNING

Drycleaning solvent is flammable and will not be used near an open flame. A fire extinguisher will be kept nearby when the solvent is used. Use only in well-ventilated places. Failure to do this may result in injury to personnel and/or damage to equipment.

2. Remove gasket material and sealant from converter housing cover (4) and transmission (2) with drycleaning solvent.

c. Installation

NOTE

Gasket must be bent over edge of converter housing cover to ensure gasket seats properly.

1. Apply adhesive to gasket (3) and install on converter housing cover (4).

CAUTION

Ensure converter housing cover is seated on oil pan flange to prevent converter housing cover from hitting flywheel and damaging converter housing cover.

2. Install converter housing cover (4) on flange (1) and transmission (2) with three capscrews (5).

5-11. SEALED LOWER CONVERTER HOUSING COVER MAINTENANCE (Cont'd)

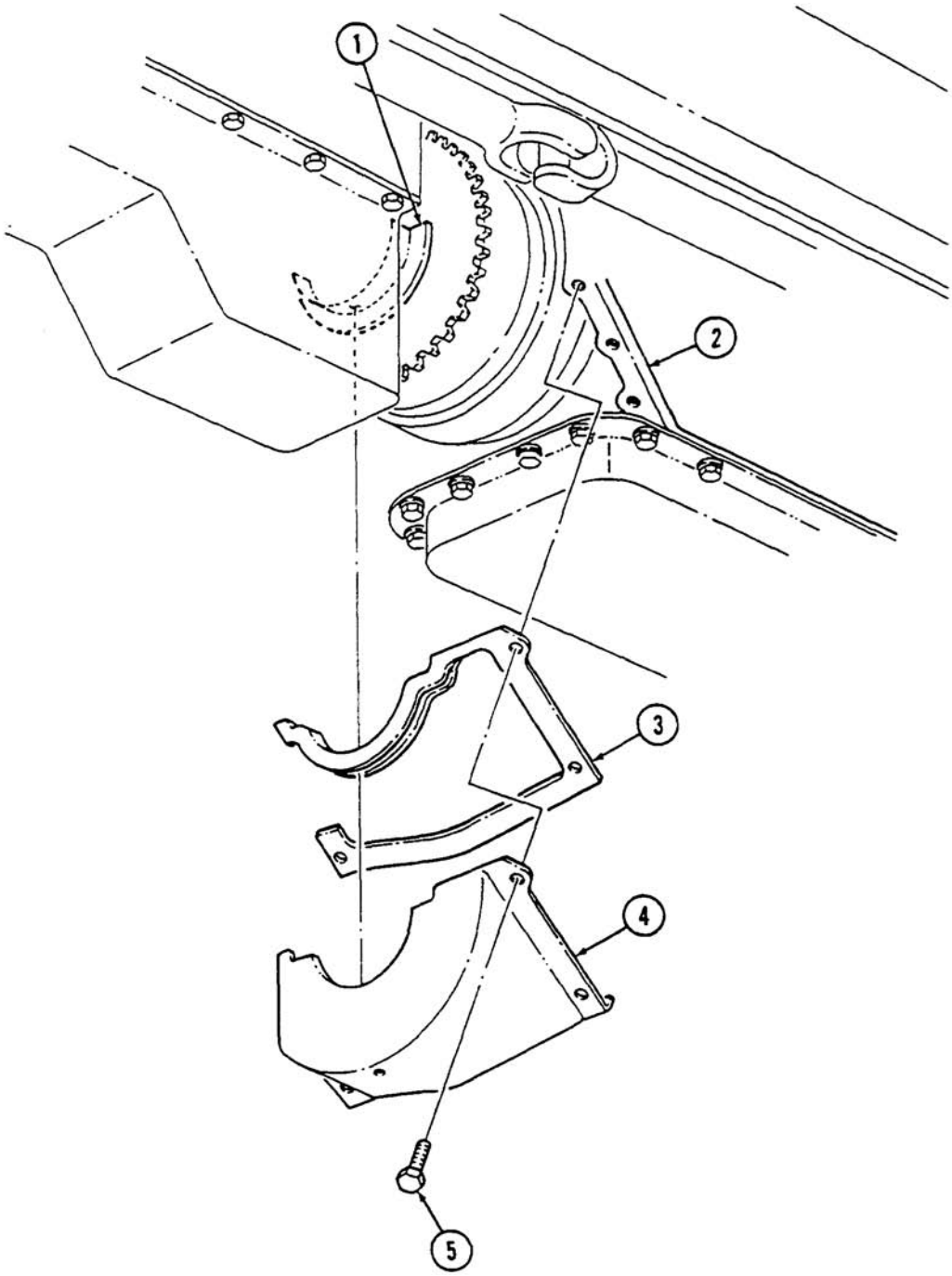

FOLLOW-ON TASKS: • Install exhaust pipe (para. 3-50).
• Install sealed upper converter housing cover (para. 5-12).

5-12. SEALED UPPER CONVERTER HOUSING COVER (2-PIECE) MAINTENANCE

This task covers:

a. Removal
b. Inspection
c. Installation

INITIAL SETUP:

Tools
General mechanic's tool kit: automotive (Appendix B, Item 1)

Materials/Parts
Gasket (Appendix G, Item 40)
Adhesive (Appendix C, Item 6)
Drycleaning solvent (Appendix C, Item 26)
Adhesive, RTV (Appendix C, Item 10)

Manual References
TM 9-2320-387-24P

Equipment Condition
Battery ground cables disconnected (para. 4-68).

General Safety Instructions
Drycleaning solvent is flammable and will not be used near an open flame.

Maintenance Level
Unit

a. Removal

1. Remove two capscrews (4) and converter housing cover (3) from transmission (1) .
2. Remove gasket (2) from converter housing cover (3). Discard gasket (2).

b. Inspection

1. Inspect converter housing cover (3) for pitting, cracking, and excessive wear. Replace if pitted, cracked, or excessively worn.

WARNING

Drycleaning solvent is flammable and will not be used near an open flame. A fire extinguisher will be kept nearby when the solvent is used. Use only in well-ventilated places. Failure to do this may result in injury to personnel and/or damage to equipment.

2. Remove gasket material and sealant from converter housing cover (3) and transmission (1) with drycleaning solvent.

c. Installation

NOTE

Gasket may require bending over edge of converter housing cover to ensure gasket seats properly.

1. Apply adhesive to gasket (2) and install on converter housing cover (3).
2. Apply RTV adhesive to edge (3.1) of converter housing cover (3) and install converter housing cover (3) on transmission (1) with two capscrews (4).
3. Apply RTV adhesive to fill any gaps between converter housing (3), transmission (1), and starter housing (1.1).

5-12. SEALED UPPER CONVERTER HOUSING COVER (2-PIECE) MAINTENANCE (Cont'd)

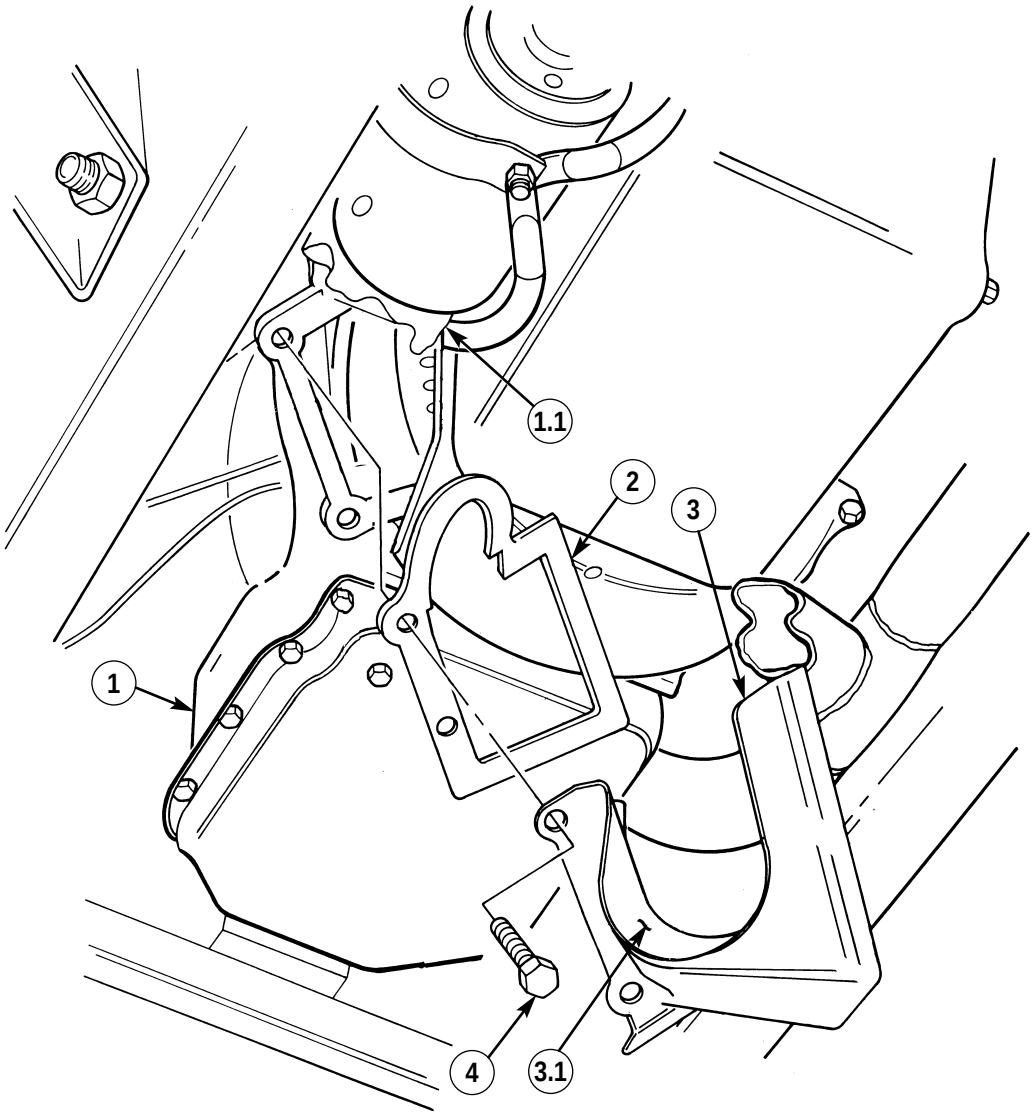

FOLLOW-ON TASK: Connect battery ground cables (para. 4-68).

5-13. TRANSMISSION MOUNT REPLACEMENT

This task covers:

a. Removal **b. Installation**

INITIAL SETUP:

Tools
General mechanic's tool kit:
automotive (Appendix B, Item 1)
Maintenance and repair shop equipment:
automotive (Appendix B, Item 2)

Materials/Parts
Two lockwashers (Appendix G, Item 174)

Manual References
TM 9-2320-387-24P

Equipment Condition
Transmission mount crossmember removed (para. 9-10).

Maintenance Level
Unit

a. Removal

Remove two capscrews (4), lockwashers (3), and transmission mount (2) from adapter (1).Discard lockwashers (3).

b. Installation

Install transmission mount (2) on adapter (1) with two lockwashers (3) and capscrews (4). Tighten capscrews (4) to 65 lb-ft (88 N·m).

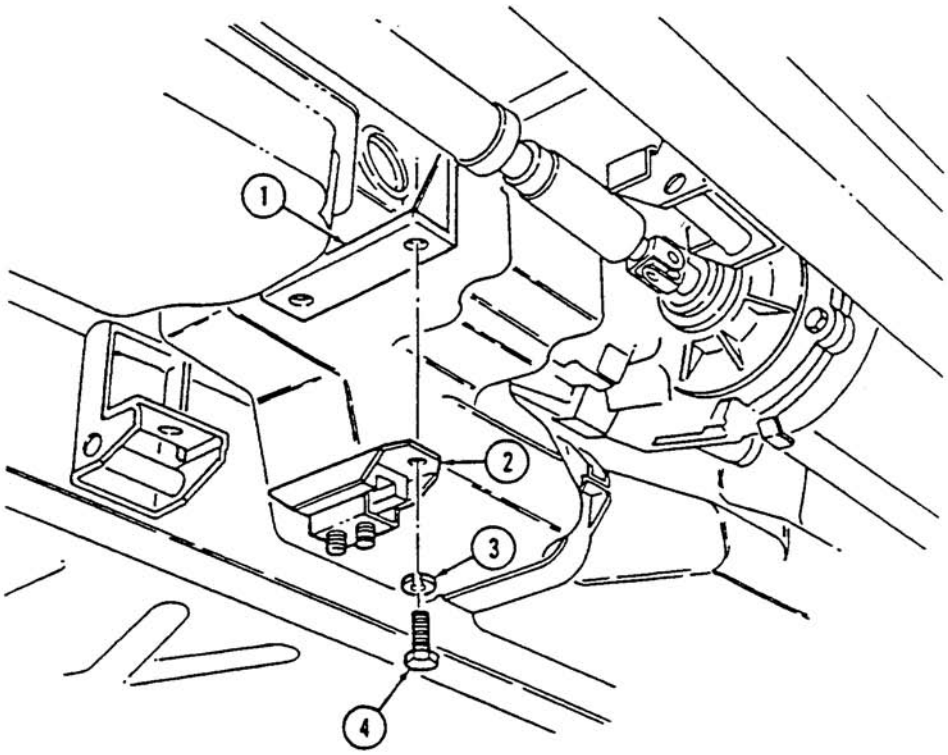

FOLLOW-ON TASK: Install transmission mount crossmember (para. 9-10).

5-14. TRANSMISSION ROAD TEST

This task covers:

Road Test

INITIAL SETUP:

Tools

General mechanic's tool kit: automotive (Appendix B, Item 1)

Manual References

TM 9-2320-387-10

Equipment Condition

- Transmission fluid at proper level (TM 9-2320-387-10).
- Adjust transmission shift linkage (para. 5-9).

Maintenance Level

Unit

Road Test

1. Position shift lever in D (overdrive), and accelerate vehicle. A 1-2, 2-3, and 3-4 shift should occur at all throttle openings. Allow vehicle to coast down to about 0 mph; 4-3, 3-2, and 2-1 shifts should occur.
2. Position shift lever in D (drive) and accelerate vehicle. A 1-2 and 2-3 shift should occur at all throttle openings. Allow vehicle to coast down to about 0 mph; 3-2 and 2-1 shifts should occur.
3. Position shift lever in 2 (low two), and accelerate vehicle. A 1-2 shift should occur at all throttle openings. No 2-3 shift can be obtained in this range. A 1-2 shift in 2 is somewhat firmer than in D. This is normal.
4. Position shift lever in 1 and accelerate vehicle. No upshifts should occur in this range.
5. Position shift lever in D, and with vehicle speed at approximately 45 mph, close throttle and move lever to 3. Transmission should downshift to 3rd gear. An increase in engine rpm and engine braking effect should be noticed.
6. Position shift lever in D and, with vehicle speed at approximately 35 mph, close throttle and move lever to 2. Transmission should downshift to 2nd gear. An increase in engine rpm and engine braking effect should be noticed.
7. Position shift lever in 2 and, with vehicle speed at approximately 25 mph, close the throttle and move lever to 1. Transmission should downshift to 1st gear. An increase in engine rpm and engine braking effect should be noticed.
8. Position shift lever in R, and check for reverse operation.
9. Hard shifting may indicate an underfilled or clogged system.

Section II. TRANSFER CASE MAINTENANCE

5-15. TRANSFER CASE MAINTENANCE TASK SUMMARY

TASK PARA.	PROCEDURES	PAGE NO.
5-16.	Transfer Case Shift Rod Maintenance	5-32
5-17.	Speedometer Driven Gear Replacement	5-34
5-18.	Transfer Case Oil Seals Replacement	5-36
5-19.	Transfer Case Vent Line Replacement	5-39

5-16. TRANSFER CASE SHIFT ROD MAINTENANCE

This task covers:

a. Removal
b. Installation
c. Adjustment

INITIAL SETUP:

Tools
General mechanic's tool kit: automotive (Appendix B, Item 1)
Maintenance and repair shop equipment: automotive (Appendix B, Item 2)

Materials/Parts
Two cotter pins (Appendix G, Item 21)

Manual References
TM 9-2320-387-10
TM 9-2320-387-24P

Maintenance Level
Unit

a. Removal

1. Remove cotter pin (9) and washer (8) from transfer case shift rod (6) and transfer case range lever (7). Discard cotter pin (9).
2. Remove cotter pin (3), washer (4), shift rod trunnion (1), and rub strip (5) from bearing and arm assembly (2). Discard cotter pin (3).
3. Remove shift rod trunnion (1) from shift rod (6).

b. Installation

1. Install shift rod trunnion (1) on shift rod (6).
2. Install shift rod (6) into transfer case range lever (7) with washer (8) and cotter pin (9).
3. Adjust shift rod (6) (task c.).

c. Adjustment

NOTE

The shift rod must be adjusted so that the detents of the transfer case lever correspond with the positions on the transfer case name plate.

1. Ensure parking brake lever (10) is engaged and place transmission shift lever (12) in D (drive) position.
2. Place transfer case shift lever (13) all the way forward in HL (high lock) position.
3. Place long screwdriver in front of parking brake lever (10) and transmission shift lever (12), and behind knob (11) on transfer case shift lever (13) to hold transfer case shift lever (13) forward.
4. Place transfer case range lever (7) in the rearward position, HL.
5. Install rub strip (5) on arm assembly (2).
6. Turn shift rod trunnion (1) so that it slips easily into hole in bearing and arm assembly (2).
7. Secure shift rod trunnion (1) to bearing and arm assembly (2) with washer (4) and cotter pin (3).
8. Remove screwdriver from transfer case shift lever (13) and place transmission shift lever (12) in N (neutral) position.

5-16. TRANSFER CASE SHIFT ROD MAINTENANCE (Cont'd)

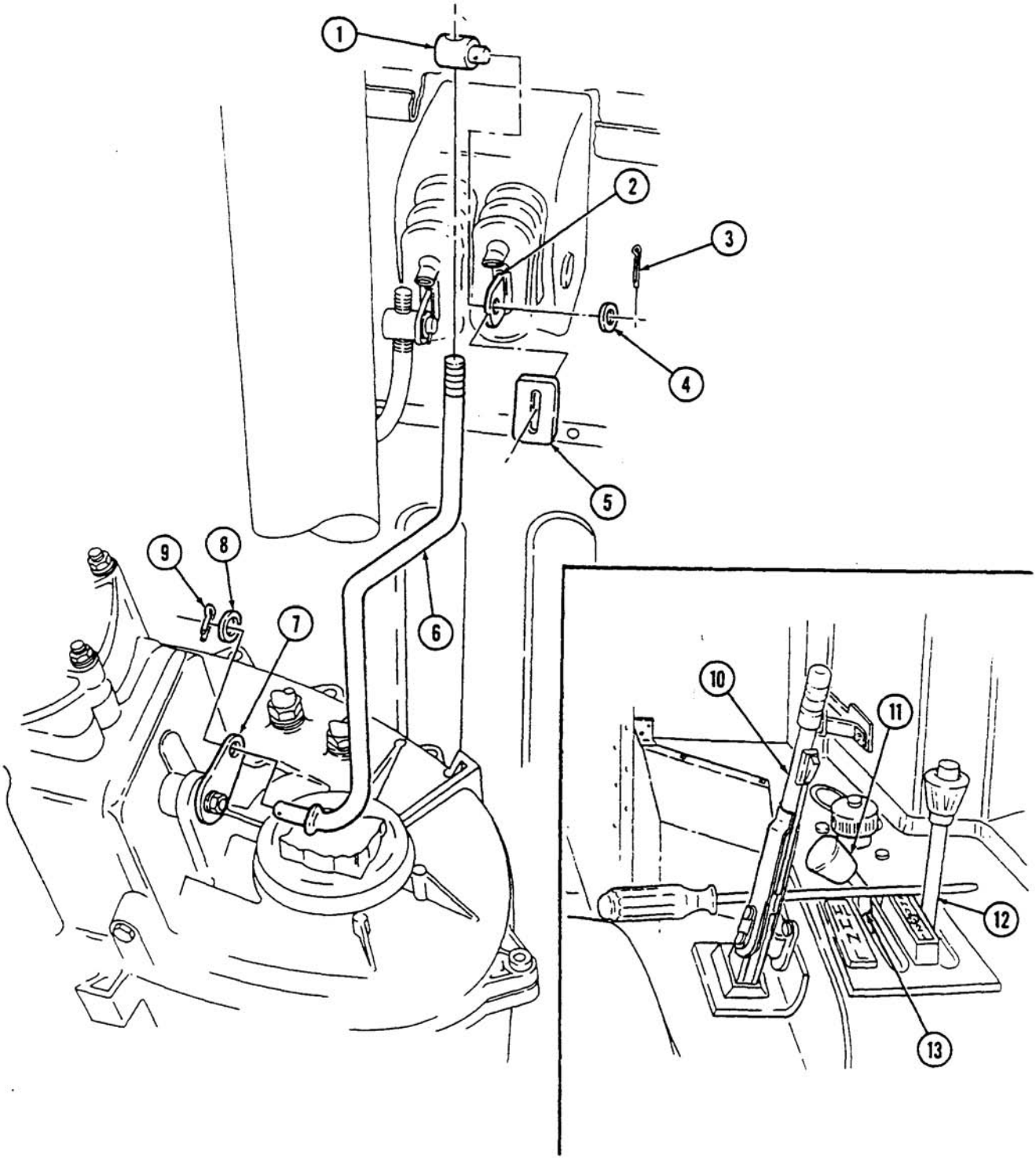

FOLLOW-ON TASK: Operate vehicle (TM 9-2320-387-10) and check for proper shifter operation.

5-17. SPEEDOMETER DRIVEN GEAR REPLACEMENT

This task covers:

a. Removal **b. Installation**

INITIAL SETUP:

Tools

General mechanic's tool kit: automotive (Appendix B, Item 1)
Maintenance and repair shop equipment: automotive (Appendix B, Item 2)

Special Tools

Mirror, inspection (Appendix B, Item 84)

Materials/Parts

O-ring (Appendix G, Item 219)

Manual References

TM 9-2320-387-10
TM 9-2320-387-24P

Maintenance Level

Unit

a. Removal

1. Disconnect flex driveshaft (1) from correction adapter (2).
2. Loosen nut (3) and remove correction adapter (2) from pinion adapter (6).
3. Remove capscrew (4) and clamp (5) from pinion adapter (6) and transfer case (8).
4. Pull pinion adapter (6) out of transfer case (8).
5. Remove O-ring (7) from pinion adapter (6). Discard O-ring (7).
6. Remove driven gear (9) from transfer case (8).

b. Installation

1. Install O-ring (7) on pinion adapter (6).

NOTE

Note number stamped on driven gear.

2. Install driven gear (9) into pinion adapter (6).

NOTE

Numbers on pinion adapter represent numbers stamped on driven gear. When installing adapter, numbers on adapter must match numbers on transfer case housing.

3. Install and align pinion adapter (6) into transfer case (8) with clamp (5) and capscrew (4). Tighten capscrew (4) to 15 lb-ft (20 N·m).
4. Install correction adapter (2) on pinion adapter (6) and tighten nut (3).
5. Connect flex driveshaft (1) to correction adapter (2).

5-17. SPEEDOMETER DRIVEN GEAR REPLACEMENT (Cont'd)

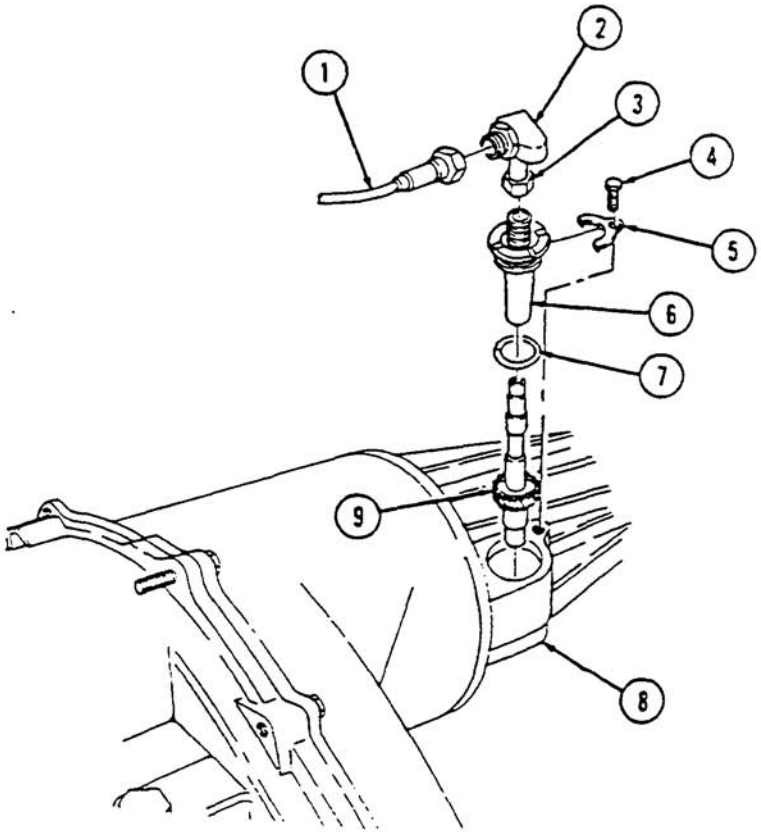

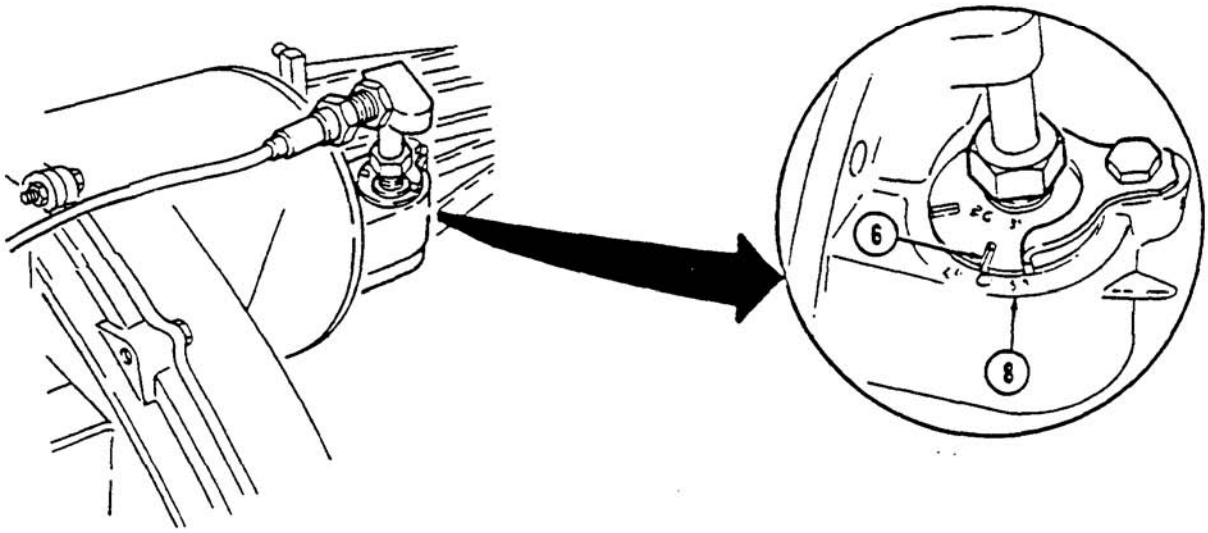

FOLLOW-ON TASK: Operate vehicle (TM 9-2320-387-10) and check speedometer for proper operation.

5-18. TRANSFER CASE OIL SEALS REPLACEMENT

This task covers:

a. Front Oil Seal Removal
b. Front Oil Seal Installation
c. Rear Oil Seal Removal
d. Rear Oil Seal Installation

INITIAL SETUP:

Tools

General mechanic's tool kit:
automotive (Appendix B, Item 1)
Maintenance and repair shop equipment:
automotive (Appendix B, Item 2)

Special Tools

Front seal installer (Appendix B, Item 96)
Rear seal installer (Appendix B, Item 95)
Drive handle (Appendix B, Item 60)

Materials/Parts

Seal, lockwasher (Appendix G, Item 298)

Manual References

TM 9-2320-387-10
TM 9-2320-387-24P

Maintenance Level

Unit

a. Front Oil Seal Removal

1. Remove four capscrews (4), two straps (3), and front propeller shaft (1) from output yoke (2).

NOTE

Have drainage container ready to catch fluid.

2. Remove nut (5), lockwasher seal (6), and output yoke (2) from transfer case (8). Discard lockwasher seal (6).
3. Remove output oil seal (7) from transfer case (8).

b. Front Oil Seal Installation

NOTE

Ensure rubber surface of seal faces front seal installer.

1. Using front seal installer and drive handle, install oil seal (7) on transfer case (8).
2. Install lockwasher seal (6) and output yoke (2) on transfer case (8) with nut (5). Tighten nut (5) to 110 lb-ft (149 N·m).
3. Connect front propeller shaft (1) to output yoke (2) with two straps (3) and four capscrews (4). Tighten capscrews (4) to 13-18 lb-ft (18-24 N·m).

5-18. TRANSFER CASE OIL SEALS REPLACEMENT (Cont'd)

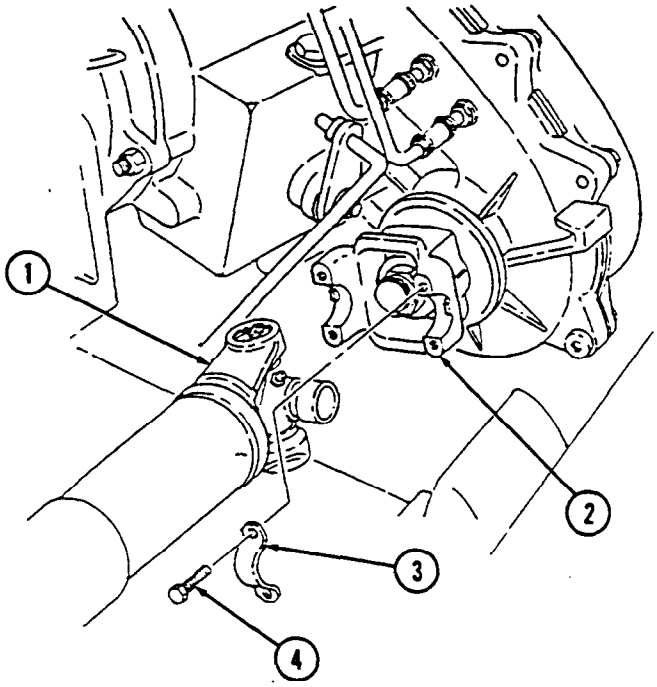

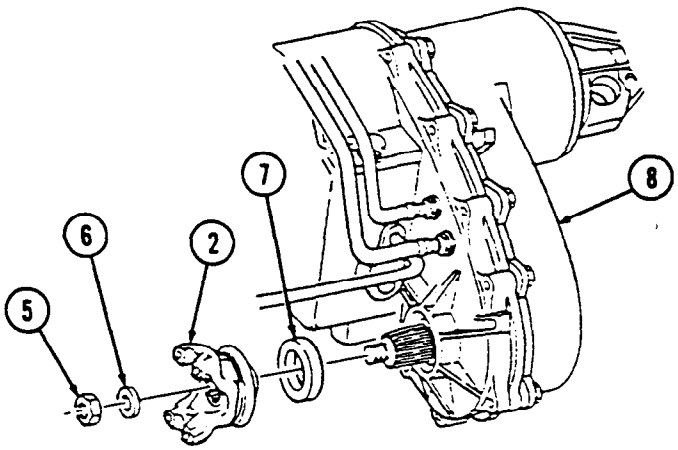

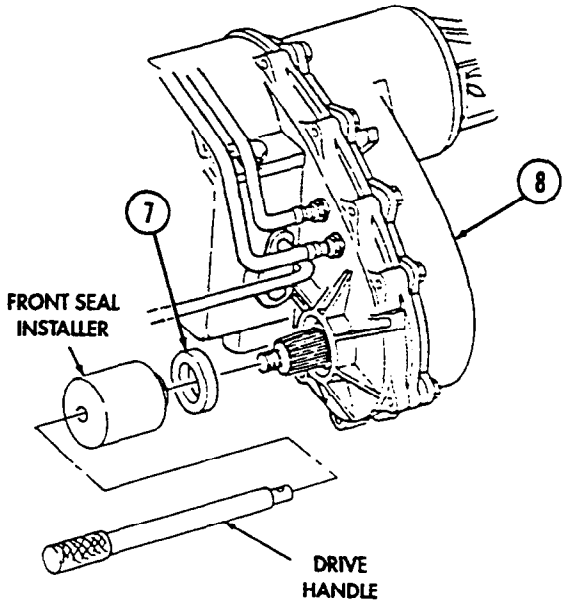

5-18. TRANSFER CASE OIL SEALS REPLACEMENT (Cont'd)

c. Rear Oil Seal Removal

1. Remove rear propeller shaft (para. 6-4).
2. Remove oil seal (1) from transfer case extension (2).

d. Rear Oil Seal Installation

1. Using rear seal installer, install oil seal (1) on transfer case extension (2).
2. Install rear propeller shaft (para. 6-4).

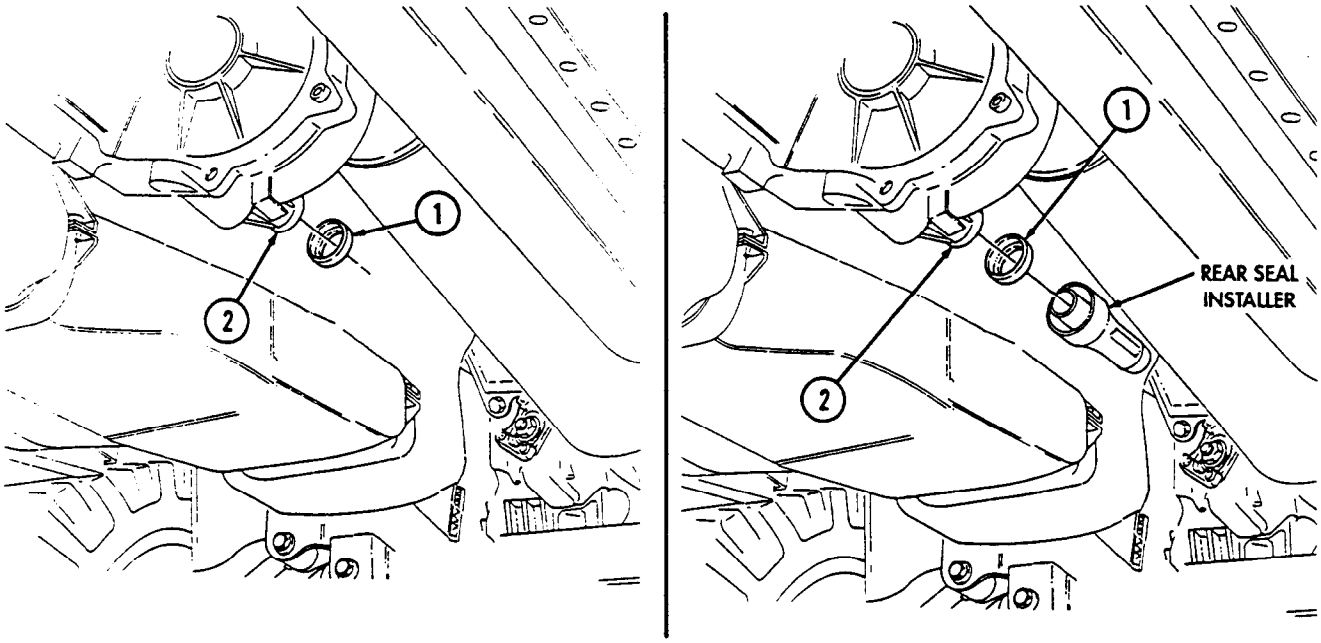

FOLLOW-ON TASK: Fill transfer case fluid to proper level (TM 9-2320-387-10).

5-19. TRANSFER CASE VENT LINE REPLACEMENT

This task covers:

a. Removal

b. Installation

INITIAL SETUP:

Tools
General mechanic's tool kit:
automotive (Appendix B, Item 1)

Manual References
TM 9-2320-387-24P

Maintenance Level
Unit

a. Removal

1. Disconnect vent line (2) from elbow (1) on transfer case (4).
2. Remove vent line (2) from tee fitting (3).

b. Installation

1. Install vent line (2) on tee fitting (3).
2. Connect vent line (2) to elbow (1) on transfer case (4).

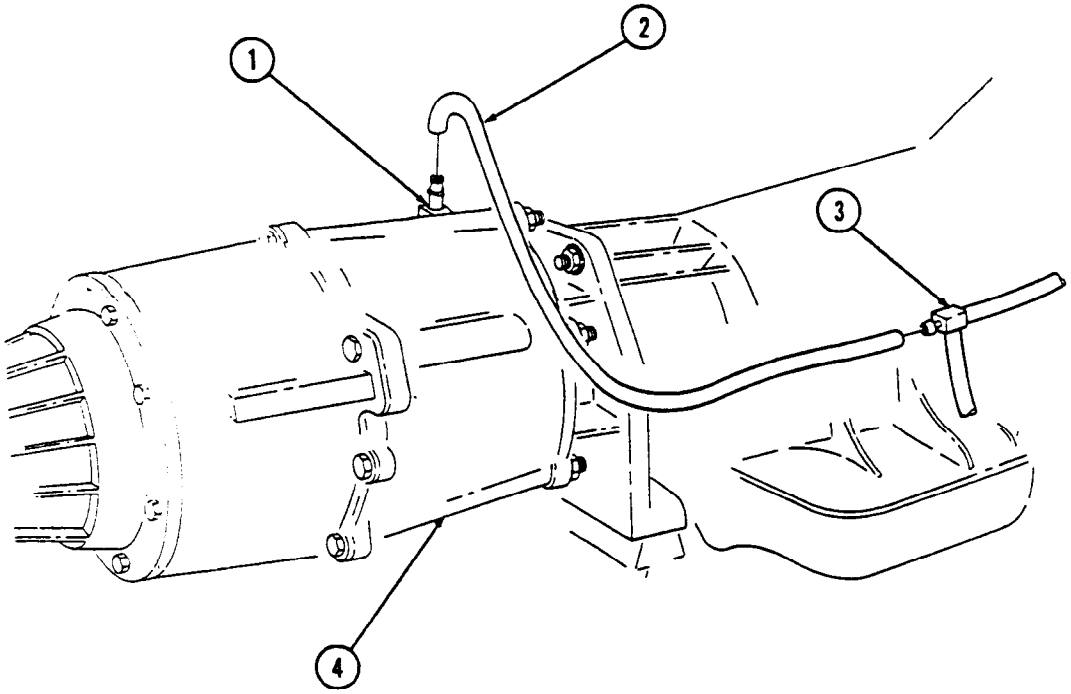

CHAPTER 6
PROPELLER SHAFTS, AXLES, AND SUSPENSION (UNIT) MAINTENANCE

Section I. PROPELLER SHAFTS MAINTENANCE

6-1. PROPELLER SHAFTS MAINTENANCE TASK SUMMARY

TASK PARA.	PROCEDURES	PAGE NO.
6-2.	Front Propeller Shaft Assembly Maintenance	6-2
6-3.	Front Propeller Shaft Assembly Repair	6-6
6-4.	Rear Propeller Shaft Maintenance	6-8
6-5.	Universal Joint Repair	6-10

6-2. FRONT PROPELLER SHAFT ASSEMBLY MAINTENANCE

This task covers:

a. Removal
b. Inspection
c. Installation

INITIAL SETUP:

Tools
General mechanic's tool kit:
automotive (Appendix B, Item 1)
Maintenance and repair shop equipment:
automotive (Appendix B, Item 2)

Materials/Parts
Cotter pin (Appendix G, Item 21)

Manual References
TM 9-2320-387-10
TM 9-2320-387-24P

Maintenance Level
Unit

NOTE

Propeller shaft bearing caps should be taped together to prevent loss of bearings.

a. Removal

1. Remove four capscrews (3) and two bearing straps (2) from front propeller shaft assembly (4) and differential pinion yoke (1).
2. Remove four nuts (7), washers (8), and two U-bolts (11) from front propeller shaft assembly (4) and transfer case output yoke (9).
3. Remove cotter pin (14), washer (13), and transfer case shift rod (12) from transfer case shift lever (6). Discard cotter pin (14).
4. Remove two nuts (15), washers (16), capscrews (18), washers (16), and center bearing (17) from engine mount (19).
5. Move front propeller shaft assembly (4) forward, then rearward, over top of transfer case (5) and exhaust pipe (10), and remove front propeller shaft assembly (4).

b. Inspection

1. Inspect driveshaft (21) and coupling shaft (22) for cracks and damage. Replace either if cracked or damaged (para. 6-3).
2. Inspect grease fittings (23) and universal joints (20) for serviceability. Replace universal joints (20) or grease fittings (23) if unserviceable (para. 6-3).
3. Inspect center bearing (17) for roughness or damage. Replace coupling shaft (22) if center bearing (17) is rough or damaged (para. 6-3).

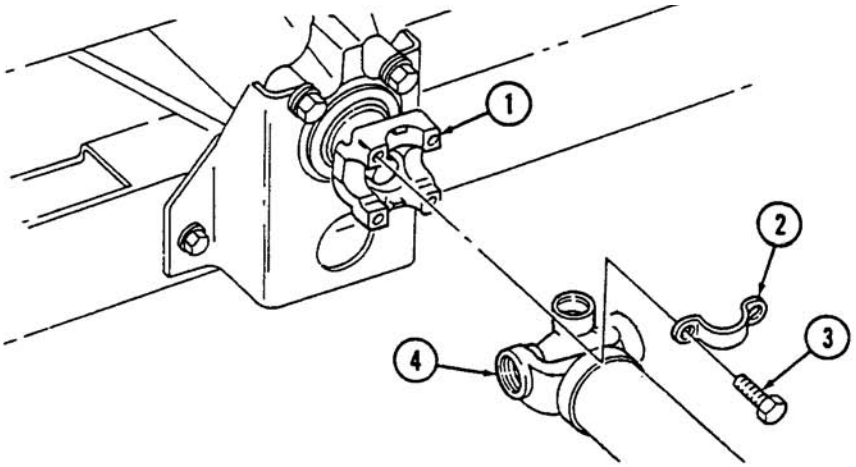

6-2. FRONT PROPELLER SHAFT ASSEMBLY MAINTENANCE (Cont'd)

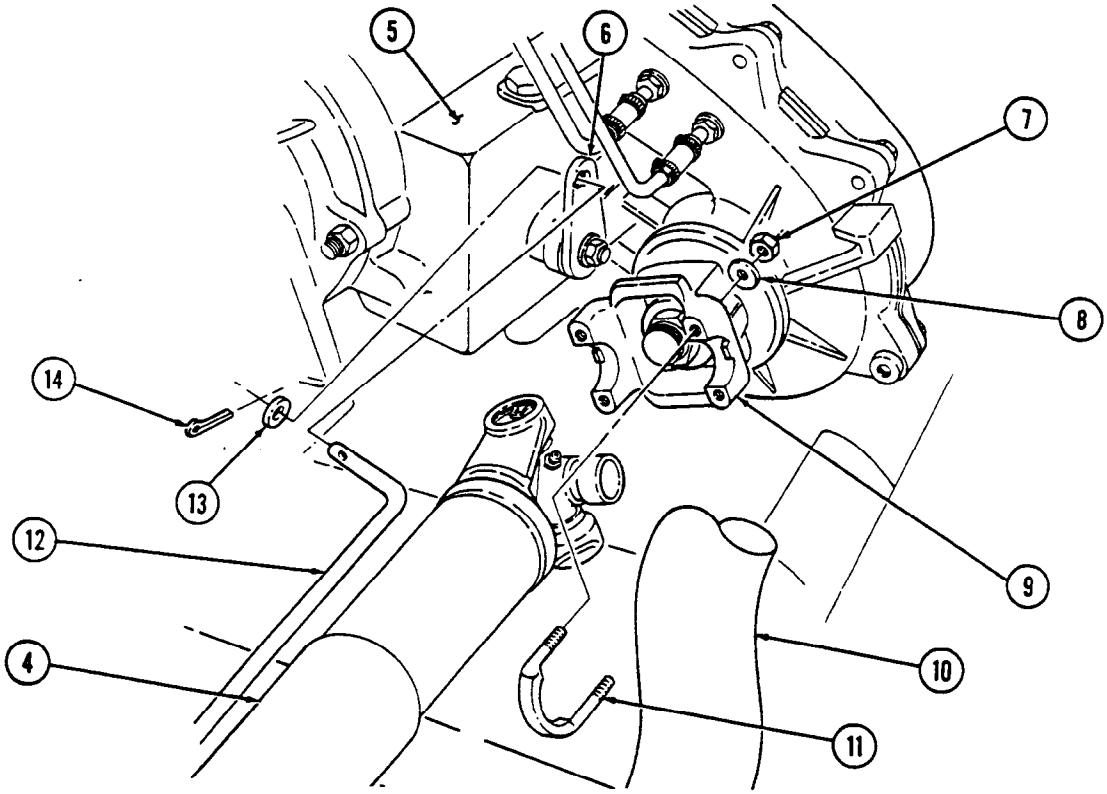

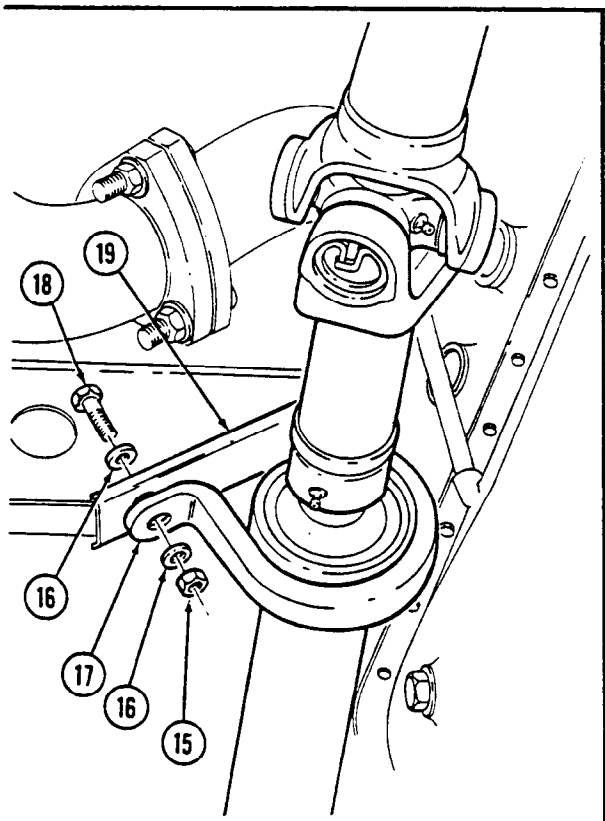

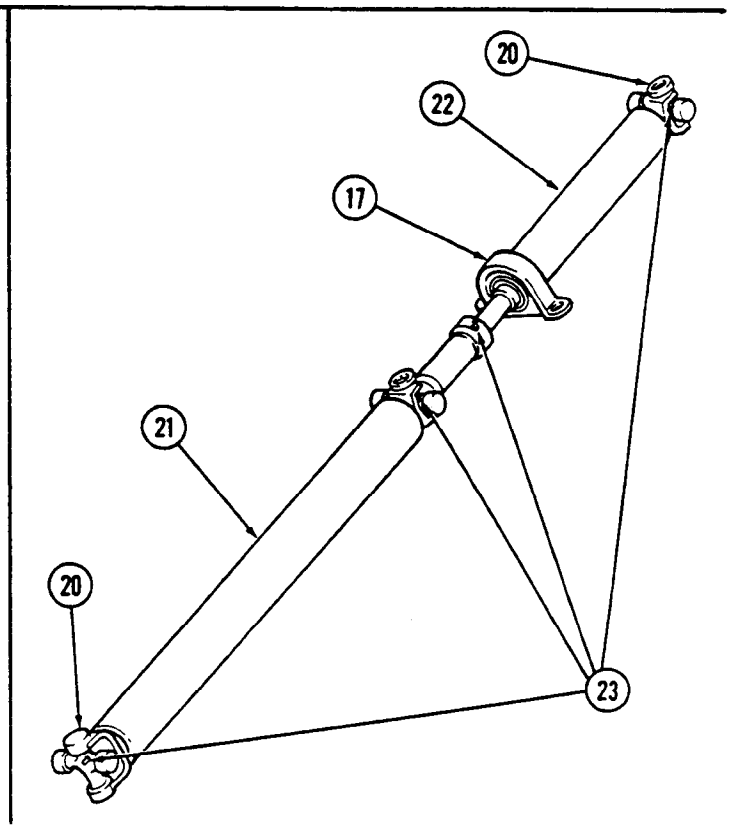

6-2. FRONT PROPELLER SHAFT ASSEMBLY MAINTENANCE (Cont'd)

c. Installation

1. Position front propeller shaft assembly (4) over exhaust pipe (10) and over top of transfer case (5).
2. Install front propeller shaft assembly (4) on differential pinion yoke (1) with two bearing straps (2) and four capscrews (3). Tighten capscrews (3) to 13-18 lb-ft (18-24 N•m).
3. Install center bearing (17) on engine mount (19) with two washers (16), capscrews (18), washers (16), and nuts (15). Tighten capscrews (18) to 60 lb-ft (81 N•m).
4. Install transfer case shift rod (12) on transfer case shift lever (6) with washer (13) and cotter pin (14).
5. Install front propeller shaft assembly (4) on transfer case output yoke (9) with two U-bolts (11), four washers (8), and nuts (7). Tighten nuts (7) to 13-18 lb-ft (18-24 N•m).

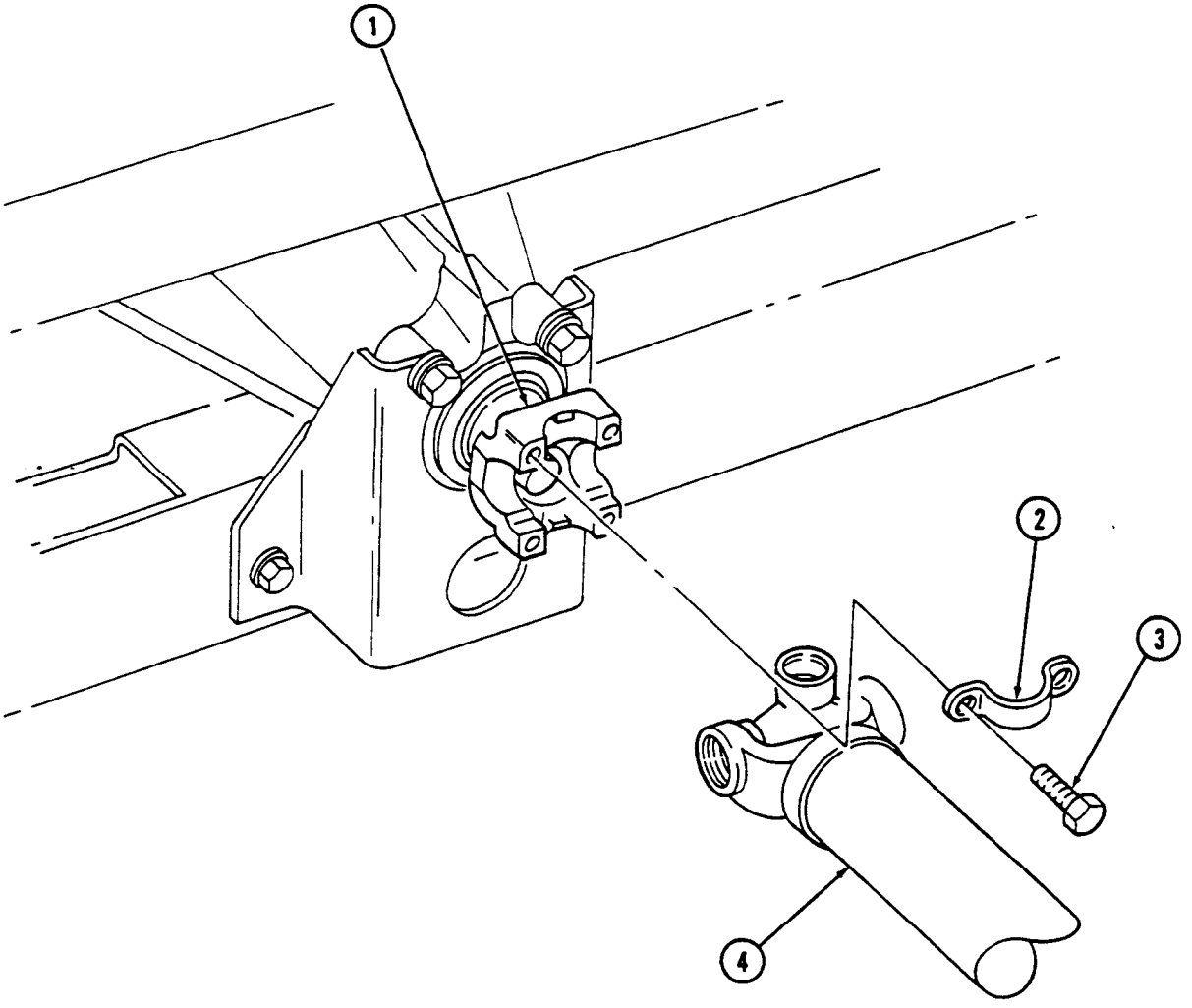

6-2. FRONT PROPELLER SHAFT ASSEMBLY MAINTENANCE (Cont'd)

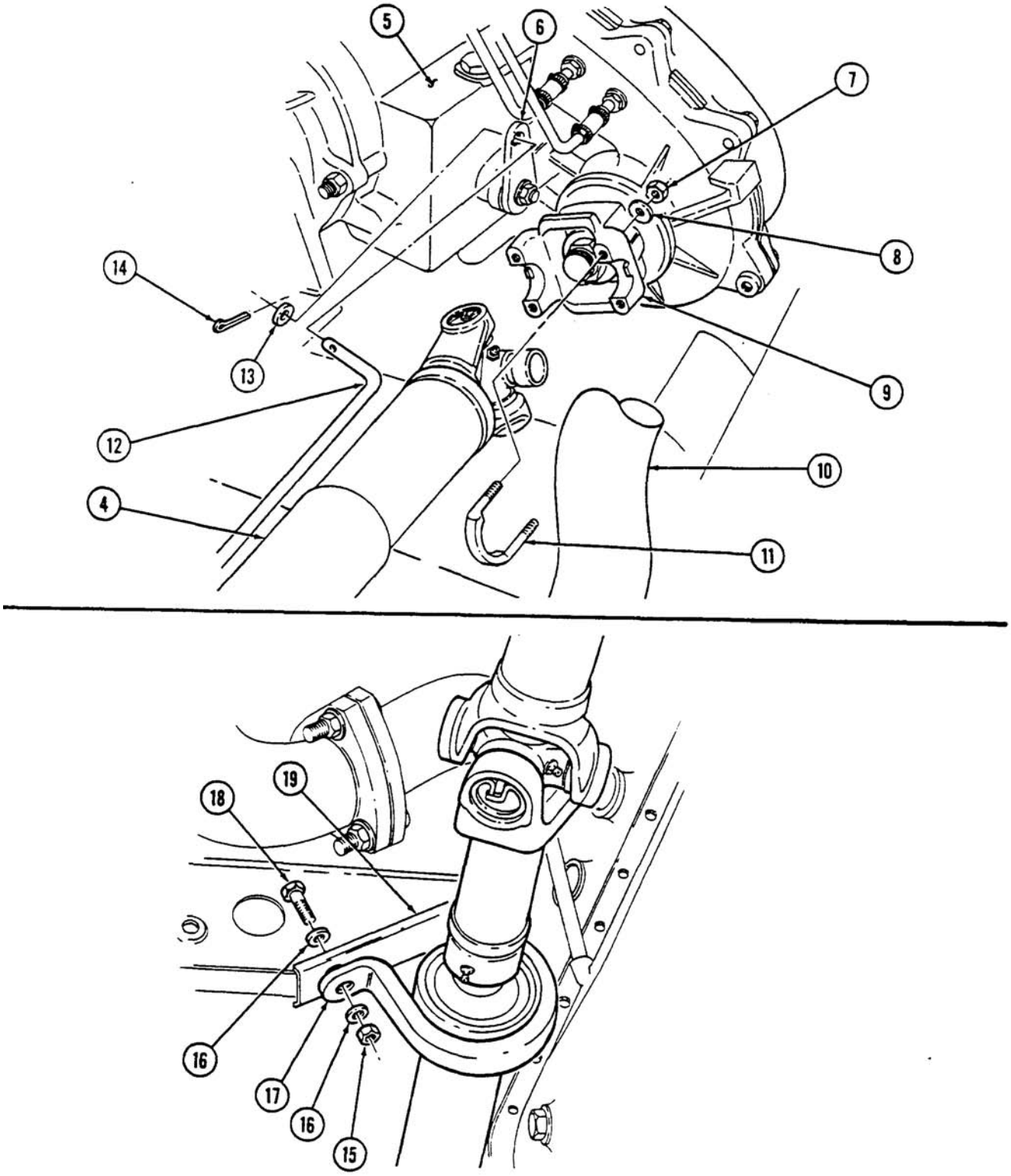

FOLLOW-ON TASK: Lubricate propeller shaft assembly (TM 9-2320-387-10).

6-3. FRONT PROPELLER SHAFT ASSEMBLY REPAIR

This task covers:

a. Disassembly
b. Cleaning and Inspection
c. Assembly

INITIAL SETUP:

Tools
General mechanic's tool kit: automotive (Appendix B, Item 1)
Maintenance and repair shop equipment: automotive (Appendix B, Item 2)

Materials/Parts
Dust cap (Appendix G, Item 31)
Grease (Appendix C, Item 34)
Drycleaning solvent (Appendix C, Item 26)

Manual References
TM 9-2320-387-24P

Equipment Condition
Front propeller shaft assembly removed (para. 6-2).

General Safety Instructions
Drycleaning solvent is flammable and will not be used near an open flame.

Maintenance Level
Unit

a. Disassembly

NOTE

Prior to disassembly, mark slip yoke and coupling shaft for assembly.

1. Place slip yoke (2) in vise.
2. Pull coupling shaft (4) apart from slip yoke (2).
3. Pry dust cap (3) off slip yoke (2). Discard dust cap (3).

b. Cleaning and Inspection

WARNING

Drycleaning solvent is flammable and will not be used near an open flame. A fire extinguisher will be kept nearby when solvent is used. Use only in well-ventilated places. Failure to do this may result in injury to personnel and/or damage to equipment.

CAUTION

Do not allow drycleaning solvent to come into contact with U-joint. Damage to equipment may result.

1. Use drycleaning solvent to clean all metallic parts.
2. Inspect driveshaft (1), coupling shaft (4), and slip yoke (2) for cracks or dents. Replace if cracked or dented.
3. Inspect splined end of coupling shaft (4) and slip yoke (2) for damage. Replace either if damaged.
4. Inspect center bearing (5) for looseness, vibration damage, rubber separation from bearing surface, and abnormal wear. If damaged, replace coupling shaft (4).

6-3. FRONT PROPELLER SHAFT ASSEMBLY REPAIR (Cont'd)

c. Assembly

NOTE

Ensure grease fitting on dust cap is aligned with wide spline in slip yoke.

1. Install dust cap (3) on coupling shaft (4).
2. Coat splines on coupling shaft (4) and slip yoke (2) with grease.

NOTE

Ensure wide spline on coupling shaft is aligned with grease fitting on slip yoke.

3. Install coupling shaft (4) and dust cap (3) on slip yoke (2).

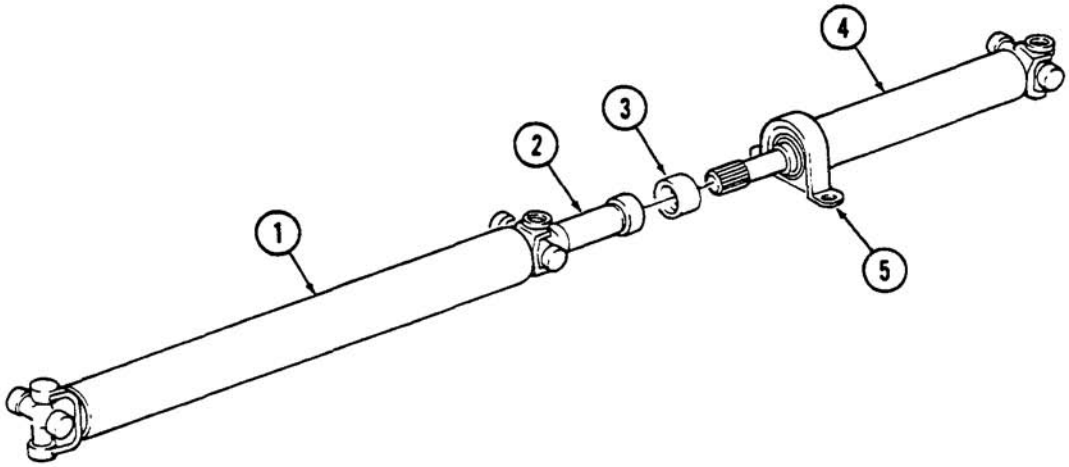

FOLLOW-ON TASK: Install front propeller shaft assembly (para. 6-2).

6-4. REAR PROPELLER SHAFT MAINTENANCE

This task covers:

a. Removal
b. Inspection
c. Installation

INITIAL SETUP:

Tools

General mechanic's tool kit:
automotive (Appendix B, Item 1)
Maintenance and repair shop equipment:
automotive (Appendix B, Item 2)

Manual References

TM 9-2320-387-10
TM 9-2320-387-24P

Maintenance Level

Unit

a. Removal

1. Chock wheels and release parking brake (TM 9-2320-387-10).
2. Remove four capscrews (6), two straps (5), and disconnect propeller shaft (3) from differential pinion yoke (4).
3. Slide propeller shaft end yoke (1) out of transfer case extension (2) and remove propeller shaft (3).

b. Inspection

1. Inspect propeller shaft (3) for cracks and dents. Replace if cracked or dented.
2. Inspect grease fittings and universal joints for serviceability. Replace universal joints (para. 6-5) or grease fittings if unserviceable.
3. Inspect splined end of end yoke (1) for damage. Replace end yoke (1) if damaged (para. 6-5).

c. Installation

1. Slide propeller shaft end yoke (1) on transfer case extension (2) and install propeller shaft (3).
2. Connect propeller shaft (3) to differential pinion yoke (4) with two straps (5) and four capscrews (6). Tighten capscrews (6) to 30-35 lb-ft (41-47 N·m).
3. Apply parking brake (TM 9-2320-387-10) and remove wheel chocks.

6-4. REAR PROPELLER SHAFT MAINTENANCE (Cont'd)

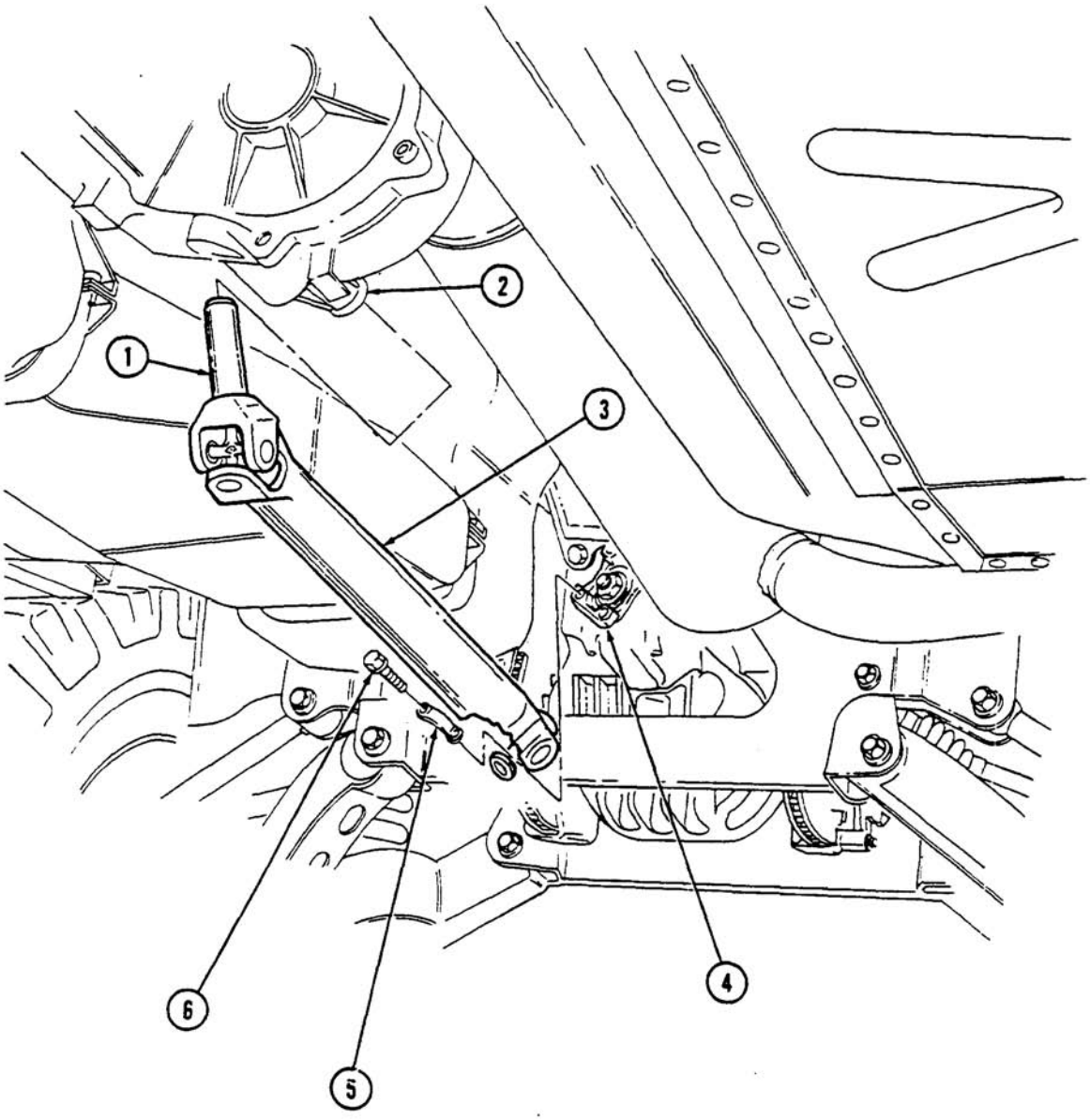

FOLLOW-ON TASK: Lubricate propeller shaft (TM 9-2320-387-10).

6-5. UNIVERSAL JOINT REPAIR

This task covers:

a. Disassembly **b. Assembly**

INITIAL SETUP:

Tools

General mechanic's tool kit: automotive (Appendix B, Item 1)
Maintenance and repair shop equipment: automotive (Appendix B, Item 2)
Universal joint bearing kit (Appendix B, Item 19)

Materials/Parts

Journal and bearing kit (Appendix G, Item 72)

Personnel Required

One mechanic
One assistant

Manual References

TM 9-2320-387-24P

Equipment Condition

Propeller shaft removed (para. 6-2 or 6-4).

Maintenance Level

Unit

NOTE

All universal joint replacement procedures are basically the same. This procedure covers the rear universal joint.

a. Disassembly

CAUTION

Do not drop bearing cups. Needle bearings can be easily lost.

1. Remove grease fitting (7) from cross (5).
2. Remove two bearing cups (4) from cross (5).
3. Remove two snaprings (2) from yoke (6).
4. Position propeller shaft (3) in vise with 1-1/8 in. socket between vise jaw and bearing cup (1) being removed. Ensure open end of socket is facing bearing cup (1).
5. Place 11/16-in. socket between opposite bearing cup (1) and vise jaw. Ensure open end of socket is facing vise jaw.
6. Press bearing cup (1) out of yoke (6) and remove bearing cup (1) from cross (5).
7. Reverse position of sockets and press remaining bearing cup (1) out of yoke (6).
8. Remove cross (5) from yoke (6).

b. Assembly

CAUTION

Ensure grease fitting on cross faces yoke. Damage to equipment will result if improperly installed.

1. Install cross (5) into yoke (6).
2. Install bearing cup (1) into yoke (6).

CAUTION

Ensure bearing cup is aligned with yoke before pressing in with vise. Damage to cross and bearing cups will result if forced into yoke.

3. Place yoke (6) in vise with 11/16-in. socket between vise jaw and bearing cup (1).
4. Press bearing cup (1) into yoke (6) far enough to install snapring (2) and install snapring (2) into yoke (6).
5. Install bearing cup (1) into yoke (6).
6. Place yoke (6) in vise with 11/16-in. socket between bearing cup (1) and vise jaw.
7. Press bearing cup (1) into yoke (6) far enough to install snapring (2) and install snapring (2) into yoke (6).
8. Install two bearing cups (4) on cross (5).
9. Install grease fitting (7) into cross (5).

6-5. UNIVERSAL JOINT REPAIR (Cont'd)

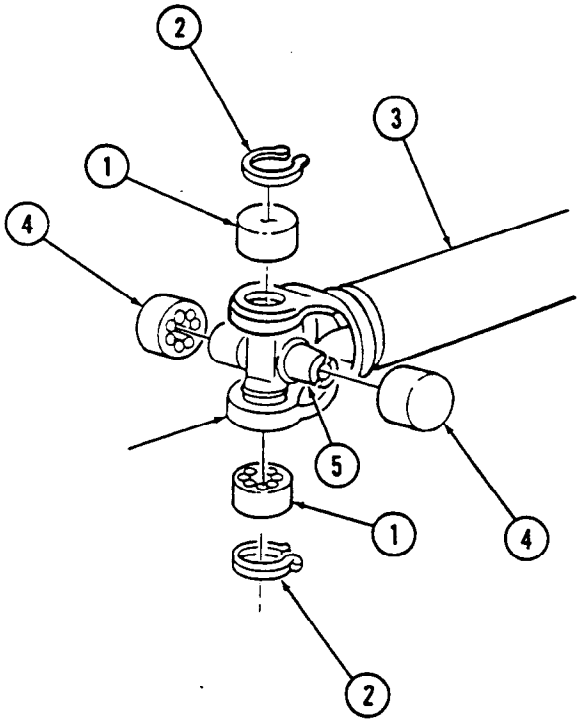

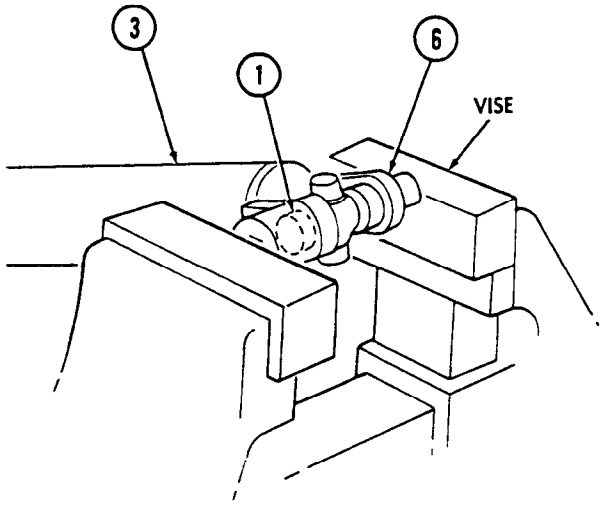

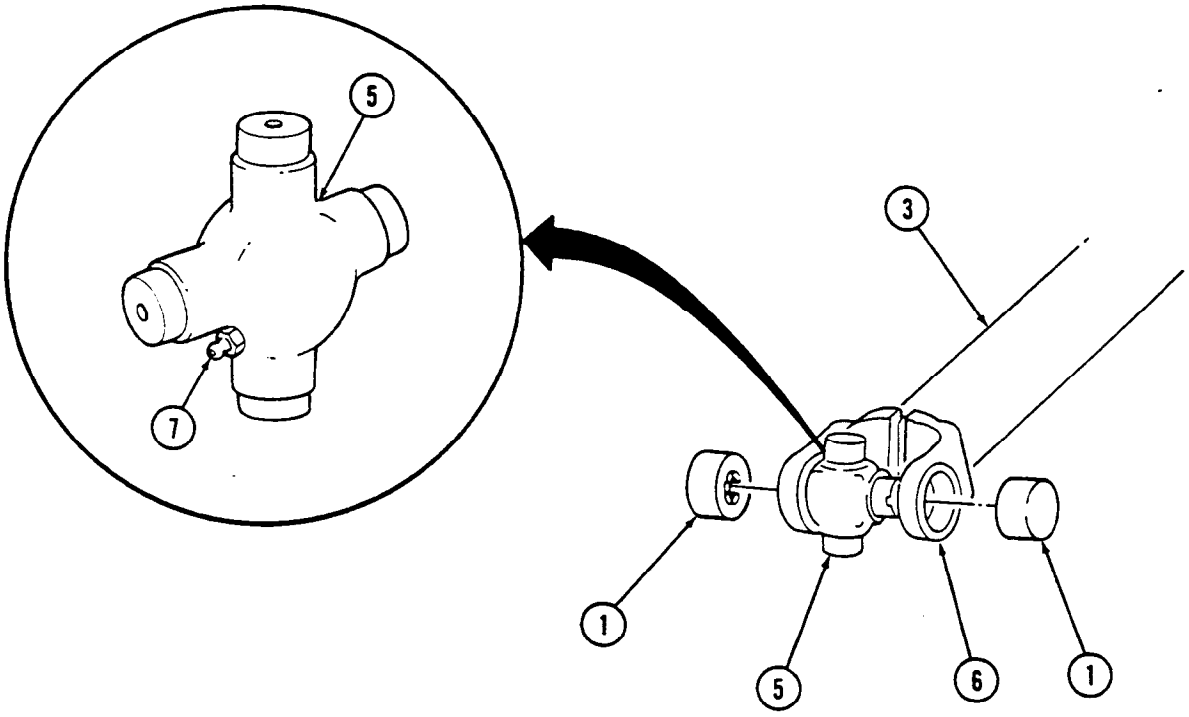

FOLLOW-ON TASK: Install propeller shaft (para. 6-2 or 6-4).

Section II. FRONT AND REAR AXLES MAINTENANCE

6-6. FRONT AND REAR AXLES MAINTENANCE TASK SUMMARY

TASK PARA.	PROCEDURES	PAGE NO.
6-7.	Halfshaft Maintenance	6-13
6-8.	Geared Hub Side Cover Maintenance	6-20
6-9.	Geared Hub Replacement	6-22
6-10.	Geared Hub Input Seal Replacement	6-28
6-11.	Geared Hub Spindle Seal Replacement	6-30
6-12.	Geared Hub Spindle Bearing Adjustment	6-35
6-13.	Wheel Stud Replacement	6-38
6-14.	Differential Vent Line Replacement	6-39
6-15.	Rear Geared Hub Vent Line Replacement	6-40
6-16.	Front Geared Hub Vent Line Replacement	6-42
6-17.	Steering Stop Maintenance	6-44
6-18.	Differential Cover Maintenance	6-46

6-7. HALFSHAFT MAINTENANCE

This task covers:

- **a. Removal**
- **b. Disassembly**
- **c. Cleaning and Inspection**
- **d. Wear Sleeve Installation**
- **e. Assembly**
- **f. Installation**

INITIAL SETUP:

Tools

General mechanic's tool kit:
automotive (Appendix B, Item 1)
Maintenance and repair shop equipment:
automotive (Appendix B, Item 2)

Materials/Parts

Boot service kit (Appendix G, Item 4)
Clip (Appendix G, Item 11)
Cotter pin (Appendix G, Item 19)
Six two-piece lockwashers
(Appendix G, Item 191)
Lockwasher (Appendix G, Item 156)
Drycleaning solvent (Appendix C, Item 26)
Lithium grease (Appendix C, Item 36)
Sealing compound (Appendix C, Item 63)
Wear sleeve (Appendix G, Item 311.1)

Manual References

TM 9-2320-387-24P

Equipment Condition

- Wheel removed (para. 8-3).
- Brake protection guard removed (para 7-11).

General Safety Instructions

Drycleaning solvent is flammable and will not be used near an open flame.

Maintenance Level

Unit

a. Removal

1. Remove access plug (8) and washer (7) from geared hub (4).
2. Remove halfshaft retaining capscrew (6) and lockwasher (5) from halfshaft (9) and geared hub (4). Discard lockwasher (5).
3. Remove six capscrews (3), two-piece lockwashers (2), and halfshaft (9) from rotor (1) and output flange (10). Discard two-piece lockwashers (2).

NOTE

Perform steps 4 and 5 for rear halfshafts only.

4. Remove cotter pin (15), washer (16), clevis pin (18), and parking brake clevis (17) from lever (14). Discard cotter pin (15).
5. Remove clip (13) and disconnect cable (11) from caliper cable bracket (12). Discard clip (13).

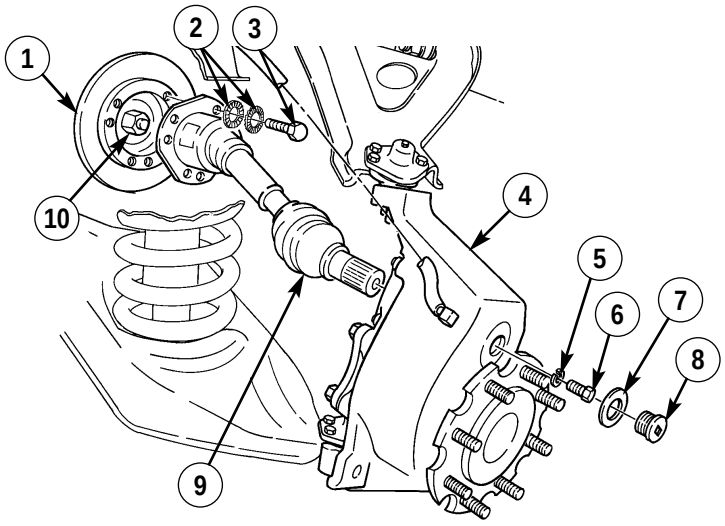

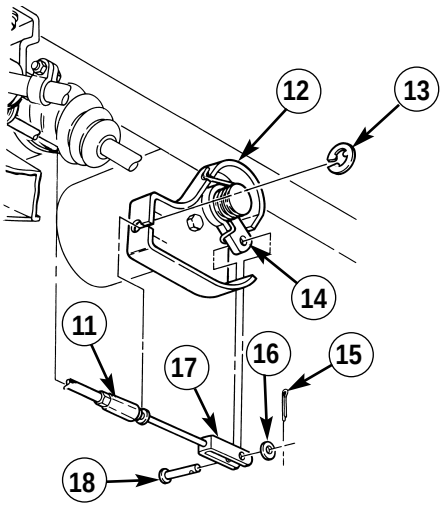

6-7. HALFSHAFT MAINTENANCE (Cont'd)

b. Disassembly

1. Loosen clamps (6) and (7) securing inner boot (5) to inner joint (1), insert (2), and shaft (4).
2. Clamp shaft (4) in soft-jawed vise.
3. Remove inner boot (5) from insert (2) and slide up on shaft (4).
4. Remove inner joint (1) and insert (2) from spider assembly (3) and shaft (4).
5. Remove insert (2) from inner joint (1). Discard insert (2).

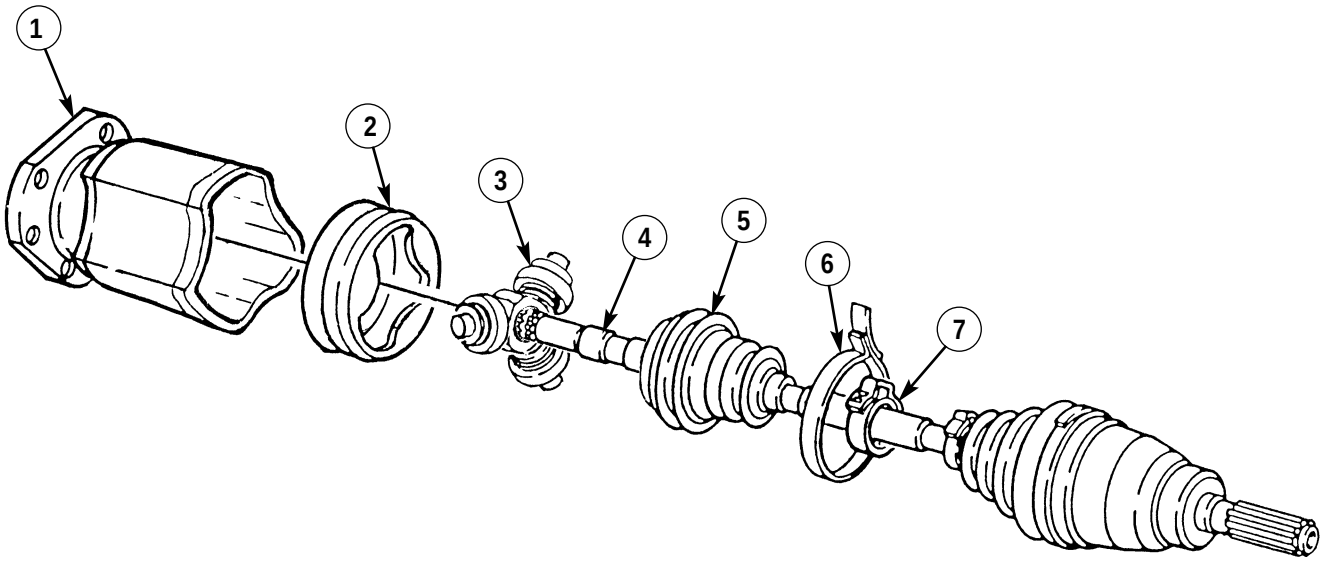

6-7. HALFSHAFT MAINTENANCE (Cont'd)

6. Remove retainer ring (8) from shaft (4). Discard retainer ring (8).
7. Remove spider assembly (3) from shaft (4).

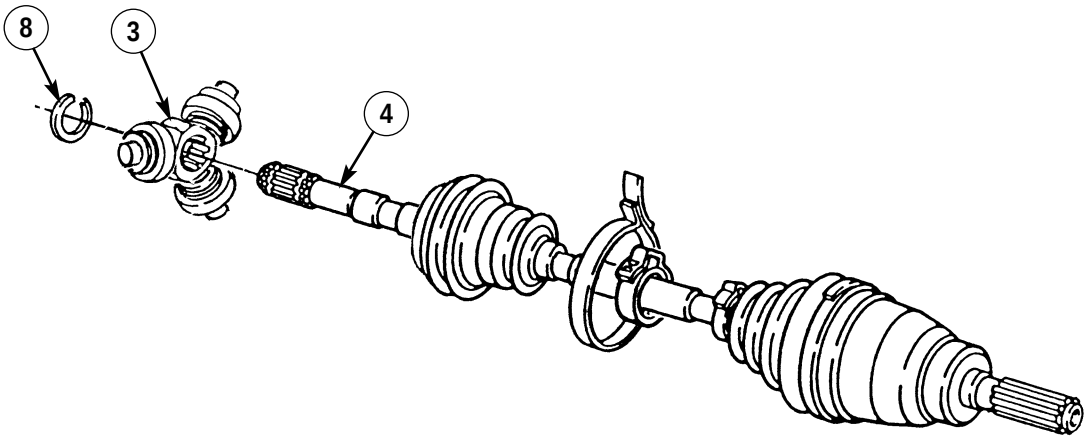

6-7. HALFSHAFT MAINTENANCE (Cont'd)

8. Remove inner boot (1) and clamps (2) and (3) from shaft (7). Discard boot (1) and clamps (2) and (3).
9. Remove shaft (7) from soft-jawed vise.
10. Remove boot clamps (4) and (5) and outer boot (6) from outer joint (8) and shaft (7). Discard boot (6) and clamps (5) and (4).

c. Cleaning and Inspection

WARNING

Drycleaning solvent is flammable and will not be used near an open flame. A fire extinguisher will be kept nearby when solvent is used. Use only in well-ventilated places. Failure to do this may result in injury to personnel and/or damage to equipment.

1. Clean all metallic parts with drycleaning solvent.
2. Inspect shaft (7) for cracks and distortion. Replace shaft (7) if cracked or distorted.
3. Inspect splined end of shaft (7) for damage. Replace shaft (7) if damaged.
4. Inspect inner joint (10) for pitting or rough joint operation. Replace inner joint (10) if pitted or unserviceable.
5. Clean output flange threaded holes (11) with a 10-mm tap to remove old sealing compound.
6. Inspect halfshaft end (9) for burrs or grooves. If burrs or grooves are present, carefully sand or grind down burrs on halfshaft end (9).

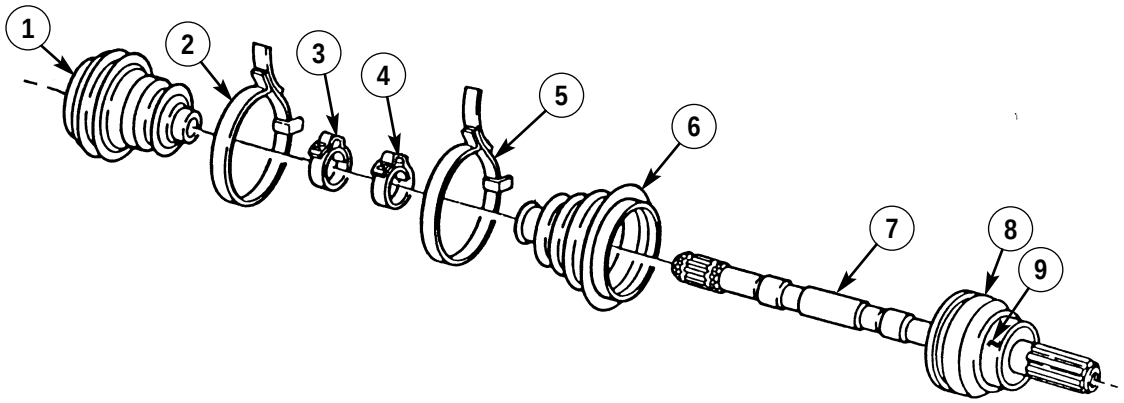

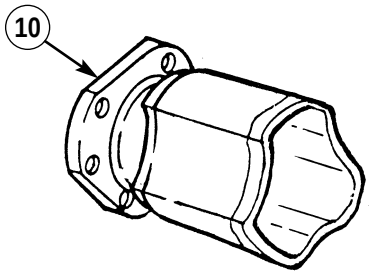

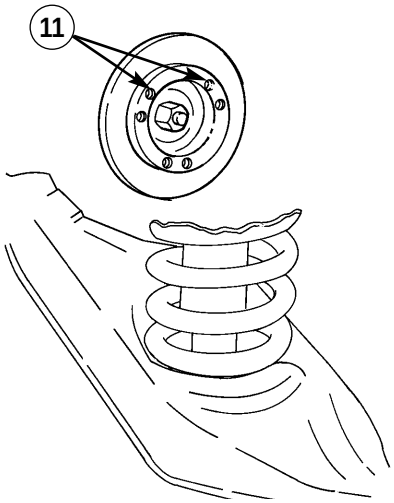

6-7. HALFSHAFT MAINTENANCE (Cont'd)

d. Wear Sleeve Installation

NOTE

When installing wear sleeve over halfshaft spline, ensure wear sleeve does not come into contact with splines.

Using a pipe or like item (11.4), slide wear sleeve (11.3) over halfshaft spline (11.2) until flange (11.5) of wear sleeve (11.3) contacts shoulder adjacent to halfshaft seal surface (11.1).

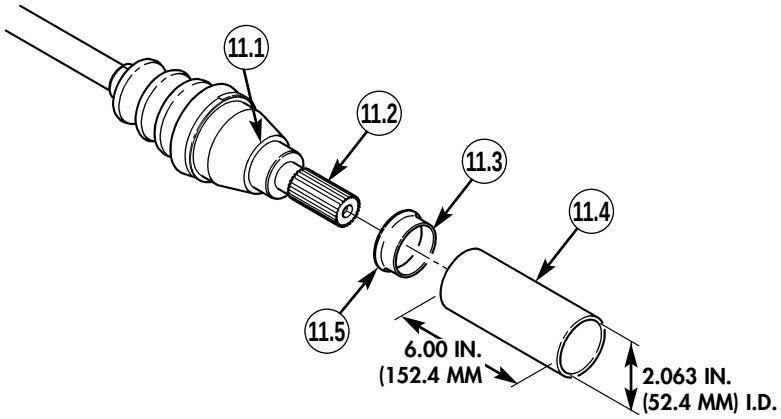

e. Assembly

1. Pack outer joint (8) with lithium grease.
2. Install outer boot (6) on shaft (7). Ensure boot (6) seats in groove of shaft (7).
3. Secure outer boot (6) on shaft (7) with clamp (4).
4. Install outer boot (6) on joint (8). Ensure boot (6) seats in groove of joint (8).
5. Secure outer boot (6) on joint (8) with clamp (5).
6. Clamp shaft (7) in soft-jawed vise.
7. Position clamps (3) and (2) on shaft (7).
8. Install inner boot (1) on shaft (7). Push boot (1) past groove on shaft (7).

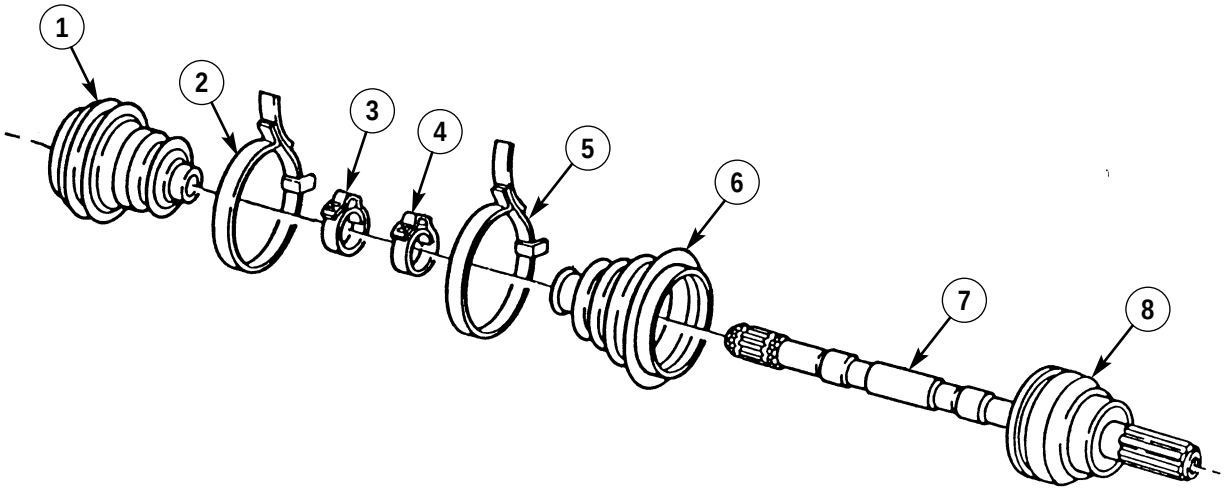

6-7. HALFSHAFT MAINTENANCE (Cont'd)

NOTE

Adhere spider assembly with lithium grease before installing on shaft.

9. Align splines of spider assembly (4) with spline on shaft (5). Use press to install spider assembly (4) on shaft (5) until spider assembly (4) seats into place.
10. Install retainer ring (3) in upper groove of shaft (5).
11. Pack inner joint (1) with lithium grease.
12. Install insert (2) on inner joint (1).
13. Install inner joint (1) and insert (2) on spider assembly (4) and shaft (5).
14. Move inner boot (6) on shaft (5) until inner boot (6) seats in groove of shaft (5).
15. Secure inner boot (6) on shaft (5) with clamp (8).
16. Install inner boot (6) on inner joint (1). Ensure boot (6) seats in groove of inner joint (1).
17. Secure inner boot (6) on inner joint (1) with clamp (7).

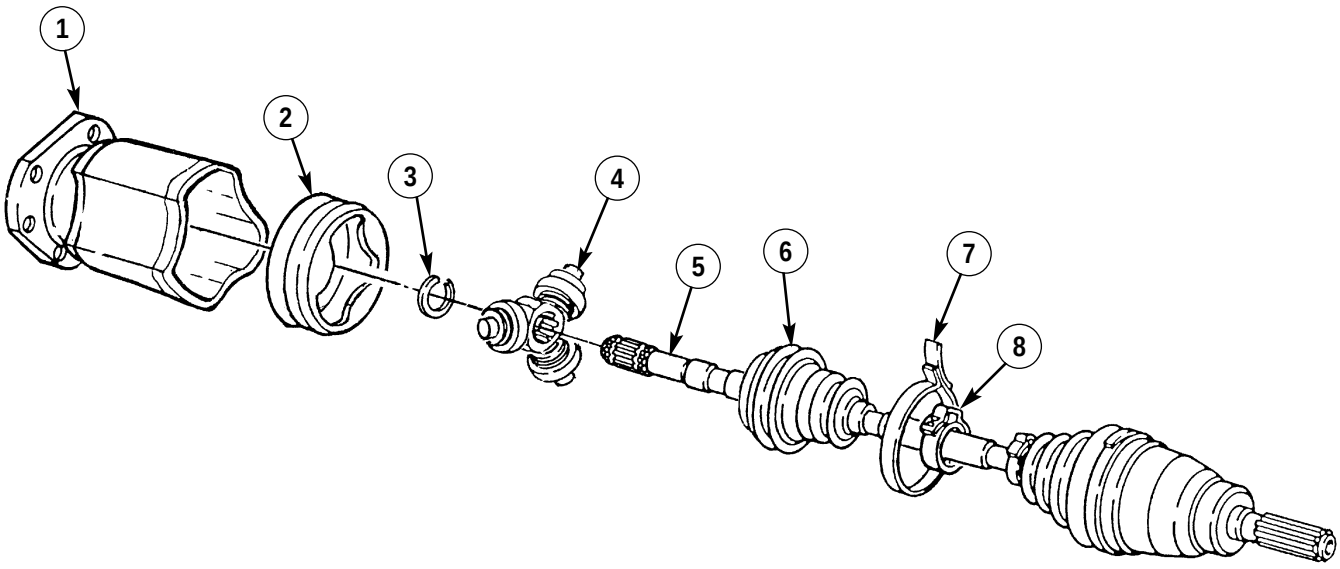

f. Installation

1. Install halfshaft (18) into geared hub (13).
2. Apply sealing compound to halfshaft retaining capscrew (15) and install halfshaft (18) on geared hub (13) with lockwasher (14) and halfshaft retaining capscrew (15). Tighten halfshaft retaining capscrew (15) to 37 lb-ft (50 N·m).
3. Install washer (16) and access plug (17) into geared hub (13). Tighten access plug (17) to 8-13 lb-ft (11-18 N·m).

6-7. HALFSHAFT MAINTENANCE (Cont'd)

NOTE

- Ensure all six capscrew holes in the rotor align with holes in output flange.
- New capscrews come with preapplied thread-locking compound, however, still apply sealing compound to threads of new capscrews. If old capscrews are to be used, mating threads must be cleaned and sealing compound applied to threads of capscrews.
- Two-piece lockwashers must be installed in sets of two with serrated sawtooth threads facing each other.

4. Apply sealing compound to six capscrews (12). Install halfshaft (18) on rotor (10) and output flange (19) with six two-piece lockwashers (11) and capscrews (12). Tighten capscrews (12) to 58 lb-ft (79 N·m).

NOTE

Perform steps 5 through 7 for rear halfshafts only.

5. Install parking brake cable (27) on caliper cable bracket (20) with clip (21).

CAUTION

- Ensure lever is in contact with caliper cable bracket stop. Damage to equipment and poor performance may result if not aligned properly.
- Ensure that clevis and clevis pin are aligned in lever. Do not move lever to accommodate misadjusted clevis. Damage to equipment and poor performance may result.

6. Install parking brake clevis (25) on lever (22) with clevis pin (26), washer (24), and cotter pin (23). Check position of lever (22) and ensure it is in contact with caliper cable bracket stop (28).
7. If lever (22) is not in contact with caliper cable bracket stop (28), adjust rear dual service parking brake (para. 7-19).

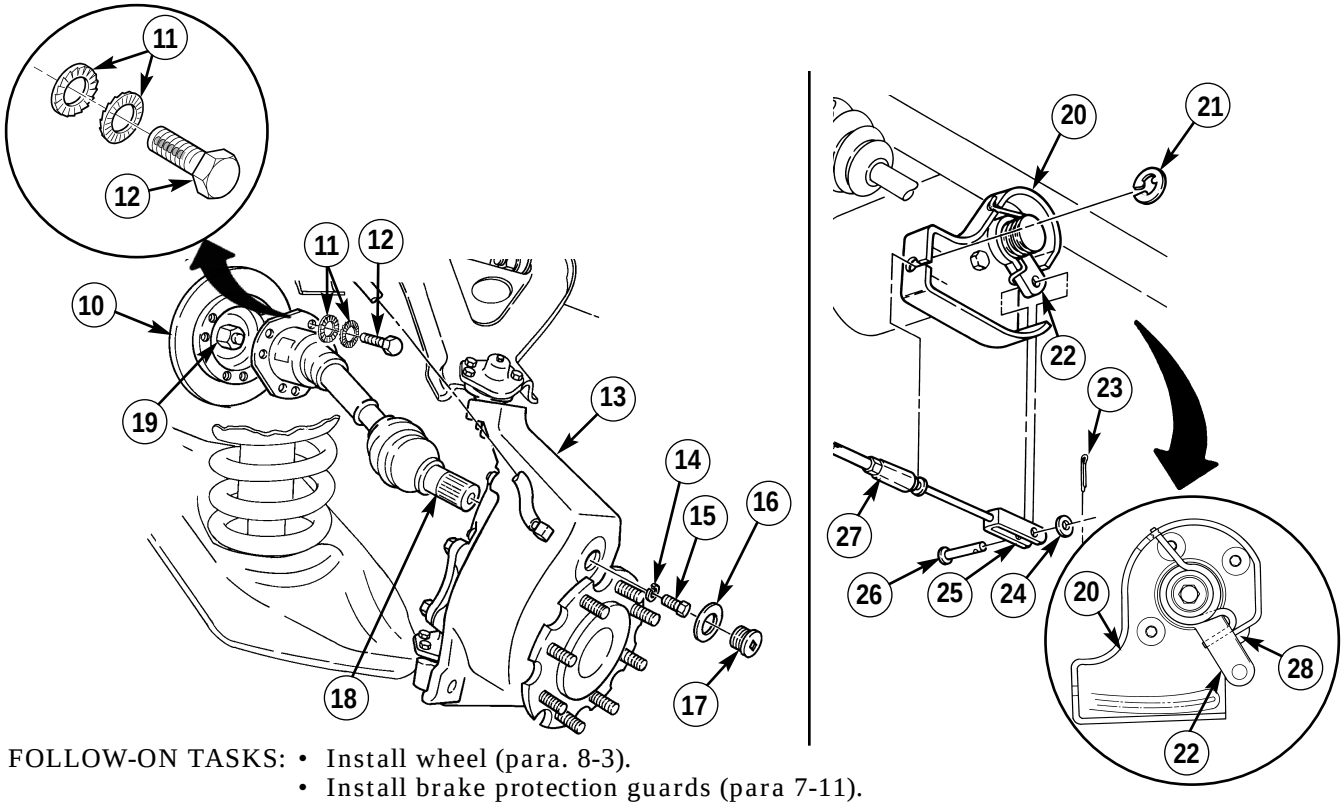

FOLLOW-ON TASKS:
- Install wheel (para. 8-3).
- Install brake protection guards (para 7-11).

6-8. GEARED HUB SIDE COVER MAINTENANCE

This task covers:

a. Removal
b. Cleaning and Inspection
c. Installation

INITIAL SETUP:

Tools

General mechanic's tool kit: automotive (Appendix B, Item 1)
Maintenance and repair shop equipment: automotive (Appendix B, Item 2)

Materials/Parts

Sealing compound (Appendix C, Item 63)
RTV silicone compound (Appendix C, Item 74)
Drycleaning solvent (Appendix C, Item 26)

Manual References

TM 9-2320-387-24P

Equipment Condition

Wheel removed (para. 8-3).

General Safety Instructions

Drycleaning solvent is flammable and will not be used near an open flame.

Maintenance Level

Unit

NOTE

- Have drainage container ready to catch oil.
- The replacement procedure for front and rear geared hub side covers is basically the same. This procedure covers the front side cover.

a. Removal

1. Remove drainplug (5) from geared hub (1) and drain geared hub (1).
2. Install drainplug (5) on geared hub (1). Tighten drainplug (5) to 8-13 lb-ft (11-18 N·m).
3. Remove eight capscrews (4), washers (3), and side cover (2) from geared hub (1).

b. Cleaning and Inspection

WARNING

Drycleaning solvent is flammable and will not be used near an open flame. A fire extinguisher will be kept nearby when solvent is used. Use only in well-ventilated places. Failure to do this may result in injury to personnel and/or damage to equipment.

1. Using drycleaning solvent, clean side cover (2).
2. Inspect side cover (2) for damage. If damaged, replace.

c. Installation

1. Apply RTV sealant to side cover (2) and install side cover (2) on geared hub (1).

NOTE

Sealing compound is fast drying. Assemble parts as quickly as possible.

2. Apply sealing compound to capscrews (4) and install eight washers (3) and capscrews (4) on side cover (2). Tighten capscrews (4) to 15 lb-ft (20 N·m).

6-8. GEARED HUB SIDE COVER MAINTENANCE (Cont'd)

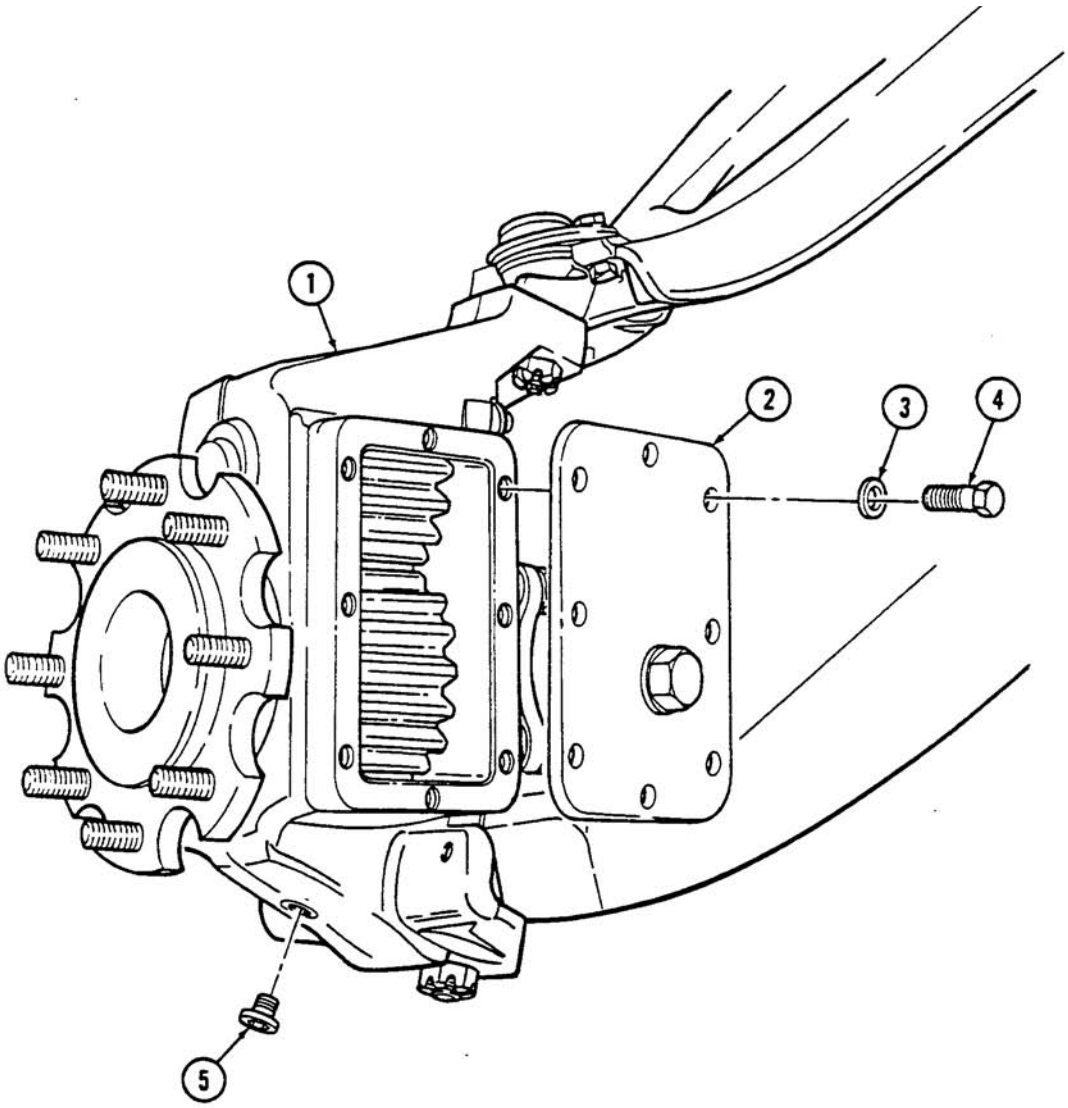

FOLLOW-ON TASKS: • Fill geared hub to proper level (para. 2-12).
• Install wheel (para. 8-3).

6-9. GEARED HUB REPLACEMENT

This task covers:

a. Removal **b. Installation**

INITIAL SETUP:

Tools

General mechanic's tool kit:
automotive (Appendix B, Item 1)
Maintenance and repair shop equipment:
automotive (Appendix B, Item 2)
Puller, mechanical (Appendix B, Item 157)

Materials/Parts

Three cotter pins (Appendix G, Item 22)
Lockwasher (Appendix G, Item 169)
Four locknuts (Appendix G, Item 113)
Four locknuts (Appendix G, Item 128)
Sealing compound (Appendix C, Item 62)
Sealing compound, anaerobic
(Appendix C, Item 58)

Personnel Required

One mechanic
One assistant

Manual References

TM 9-2320-387-24P

Equipment Condition

- Wheel removed (para. 8-3).
- Steering stop removed (para. 6-17).

General Safety Instructions

Geared hub must be supported during removal and installation.

Maintenance Level

Unit

CAUTION

Use of a pickle fork instead of the puller kit may damage serviceable components (boots).

NOTE

- Have drainage container ready to catch fluid.
- The replacement procedure for front and rear geared hubs is basically the same. This procedure covers the front geared hub.

a. Removal

1. Remove drainplug (29) from geared hub (12) and drain geared hub (12).
2. Install drainplug (29) in geared hub (12).
3. Remove capscrew (21), washer (20), and vent line bracket and clamp (19) from geared hub (12).
4. Loosen clamp (6) and disconnect vent line (22) from geared hub fitting (7).
5. Remove cotter pin (25), slotted nut (26), and washer (27) from tie rod end (28) and geared hub (12). Discard cotter pin (25).
6. Using puller, disconnect tie rod end (28) from geared hub (12).
7. Remove access plug (11), washer (10), axle halfshaft retaining capscrew (9), lockwasher (8), and disconnect halfshaft (13) from geared hub (12). Discard lockwasher (8).

6-9. GEARED HUB REPLACEMENT (Cont'd)

WARNING

Geared hub must be supported during removal. Failure to support geared hub may cause injury to personnel or damage to equipment.

NOTE

Note direction of inner and outer capscrews for installation.

8. Remove four locknuts (18), washers (14), capscrews (15), and washers (14) from lower ball joint (16) and lower control arm (17). Discard locknuts (18).
9. Remove four locknuts (3), washers (2), capscrews (1), and washers (2) from upper ball joint (4) and upper control arm (5). Discard locknuts (3).
10. Remove cotter pin (23), slotted nut (24), and upper ball joint (4) from upper control arm (5) and geared hub (12). Discard cotter pin (23).
11. Lower support and remove geared hub (12).

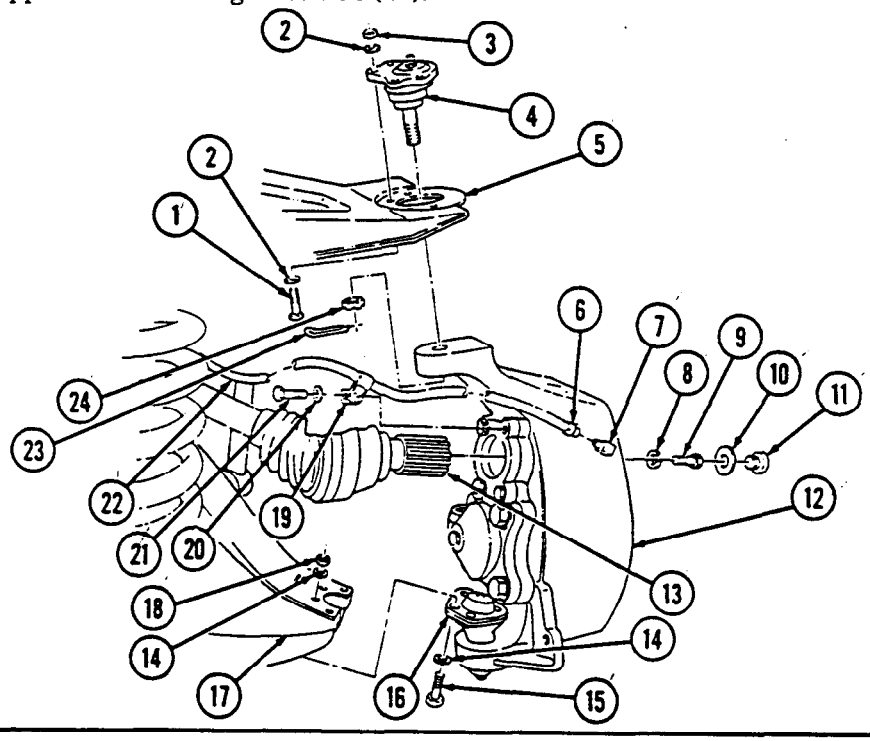

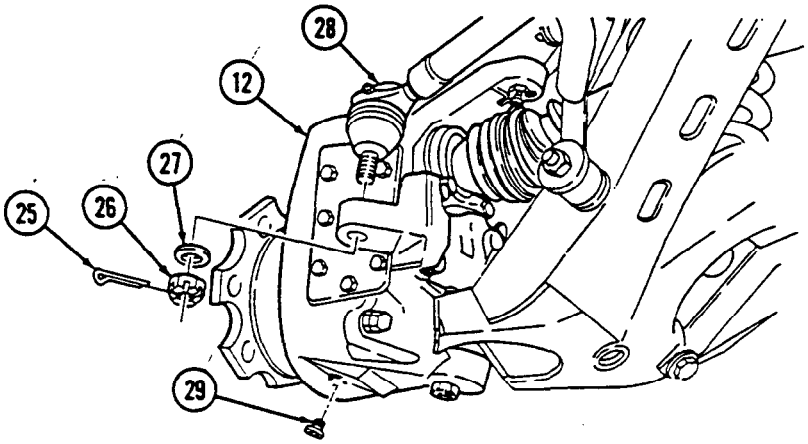

6-9. GEARED HUB REPLACEMENT (Cont'd)

12. Place geared hub (3) in vise.
13. Remove cotter pin (1), slotted nut (2), and lower ball joint (4) from geared hub (3). Discard cotter pin (1).

b. Installation

WARNING

Geared hub must be supported during installation. Failure to support geared hub may cause injury to personnel or damage to equipment.

NOTE

- If geared hub is received with P/N 6005120 and left front or right rear installation is required, replace steering arm cover P/N 6005120 with P/N 6005121.
- If geared hub is received with P/N 6005121 and right front or left rear installation is required, replace steering arm cover P/N 6005121 with P/N 6005120.
- Use existing steering arm cover if serviceable.
- Perform steps 1 through 1.2 for replacement of steering arm cover. Proceed to step 1.3 for geared hub installation.

1. Remove four capscrews (4.1), washers (4.2), and steering arm cover (4.3) from geared hub (3).

CAUTION

When installing steering arm cover, ensure seal in cover is aligned on spindle extension or damage to seal will result.

NOTE

Immediately install steering arm cover after application of sealant.

1.1. Clean sealing surfaces on geared hub (3) and steering arm cover (4.3), then apply anaerobic sealing compound to steering arm cover (4.3).

1.2. Apply sealing compound to threads on capscrews (4.1) and install steering arm cover (4.3) on geared hub (3) with four washers (4.2) and capscrews (4.1). Tighten capscrews (4.1) to 65 lb-ft (88 N·m).

NOTE

Upper and lower ball joints have grease fittings.

1.3. Install lower ball joint (4) on geared hub (3) with slotted nut (2), but do not tighten.

2. Install upper ball joint (7) on upper control arm (8) and geared hub (3) with slotted nut (19).
3. Tighten slotted nut (19) on upper ball joint (7) to 65 lb-ft (88 N·m). Install cotter pin (18).
4. Install four washers (21), capscrews (20), washers (6), and locknuts (5) on upper ball joint (7) and upper control arm (8). Tighten locknuts (5) to 37 lb-ft (50 N·m).
5. Apply sealing compound to halfshaft retaining capscrew (10) and install halfshaft (15) on geared hub (3) with lockwasher (9) and halfshaft retaining capscrew (10). Tighten halfshaft retaining capscrew (10) to 37 lb-ft (50 N·m).
6. Install washer (11) and access plug (12) on geared hub (3). Tighten access plug (12) to 8-13 lb-ft (11-18 N·m).
7. Install lower ball joint (4) and geared hub (3) on lower control arm (16). Ensure lower ball joint (4) is below lower control arm (16).

6-9. GEARED HUB REPLACEMENT (Cont'd)

NOTE

Ensure outer capscrews are installed from top down and inner capscrews are installed from bottom up.

8. Secure lower ball joint (4) to lower control arm (16) with four washers (13), capscrews (14), washers (13), and locknuts (17). Tighten locknuts (17) to 60 lb-ft (81 N·m).

CAUTION

Do not loosen slotted nut to install cotter pin. Doing this may result in damage to equipment.

9. Tighten slotted nut (2) on lower ball joint (4) to 73 lb-ft (99 N·m) and install cotter pin (1).

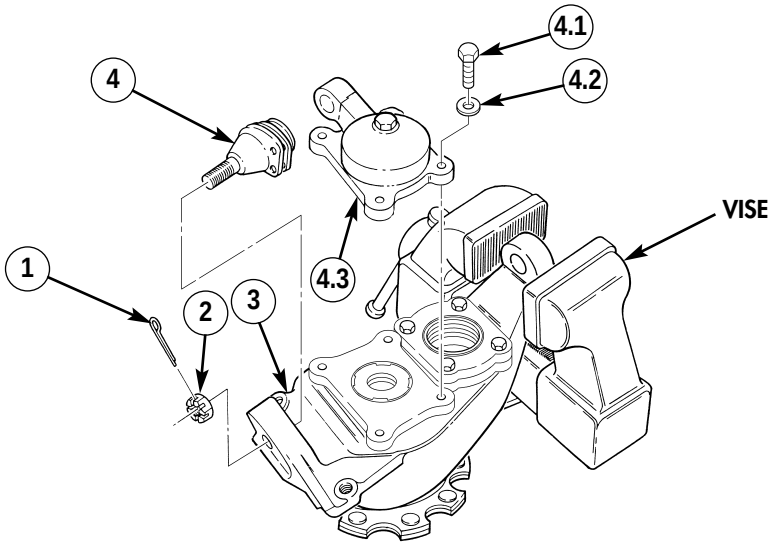

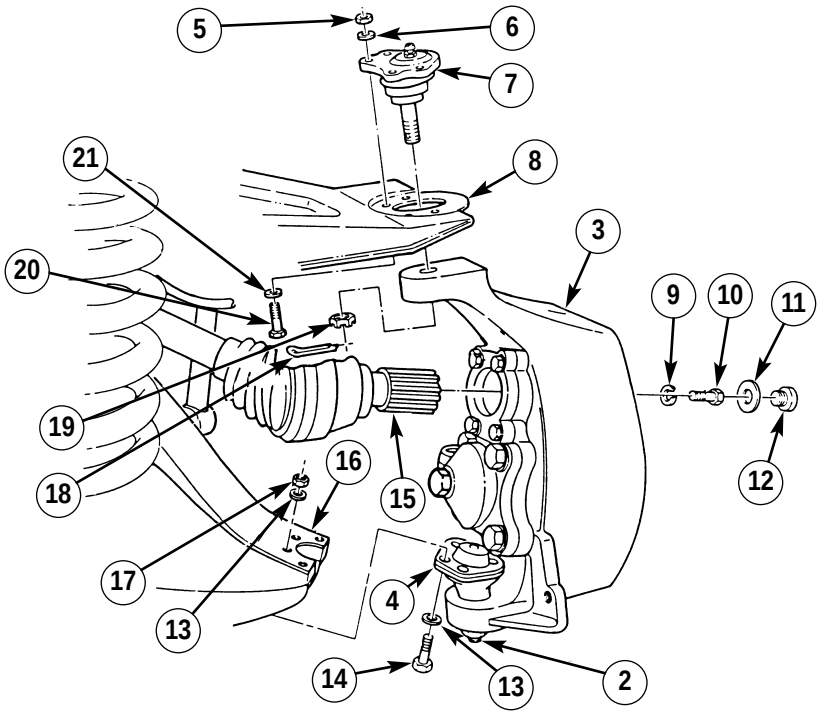

6-9. GEARED HUB REPLACEMENT (Cont'd)

10. Install tie rod end (4) on geared hub (5) with washer (3) and slotted nut (2). Tighten slotted nut (2) to 70 lb-ft (95 N•m) and install cotter pin (1).
11. Connect vent line (6) to geared hub fitting (7) and tighten clamp (8).
12. Install vent line (6) and vent line bracket and clamp (11) on geared hub (5) with washer (10) and capscrew (9). Tighten capscrew (9) to 38 lb-ft (52 N•m).
13. Tighten drainplug (14) to 8-13 lb-ft (11-18 N•m).
14. Remove fill plug (13) and washer (12) from geared hub (5).
15. Fill geared hub (5) to proper level (para 2-12).
16. Install washer (12) and fill plug (13) on geared hub (5). Tighten fill plug (13) to 8-13 lb-ft (11-18 N•m).

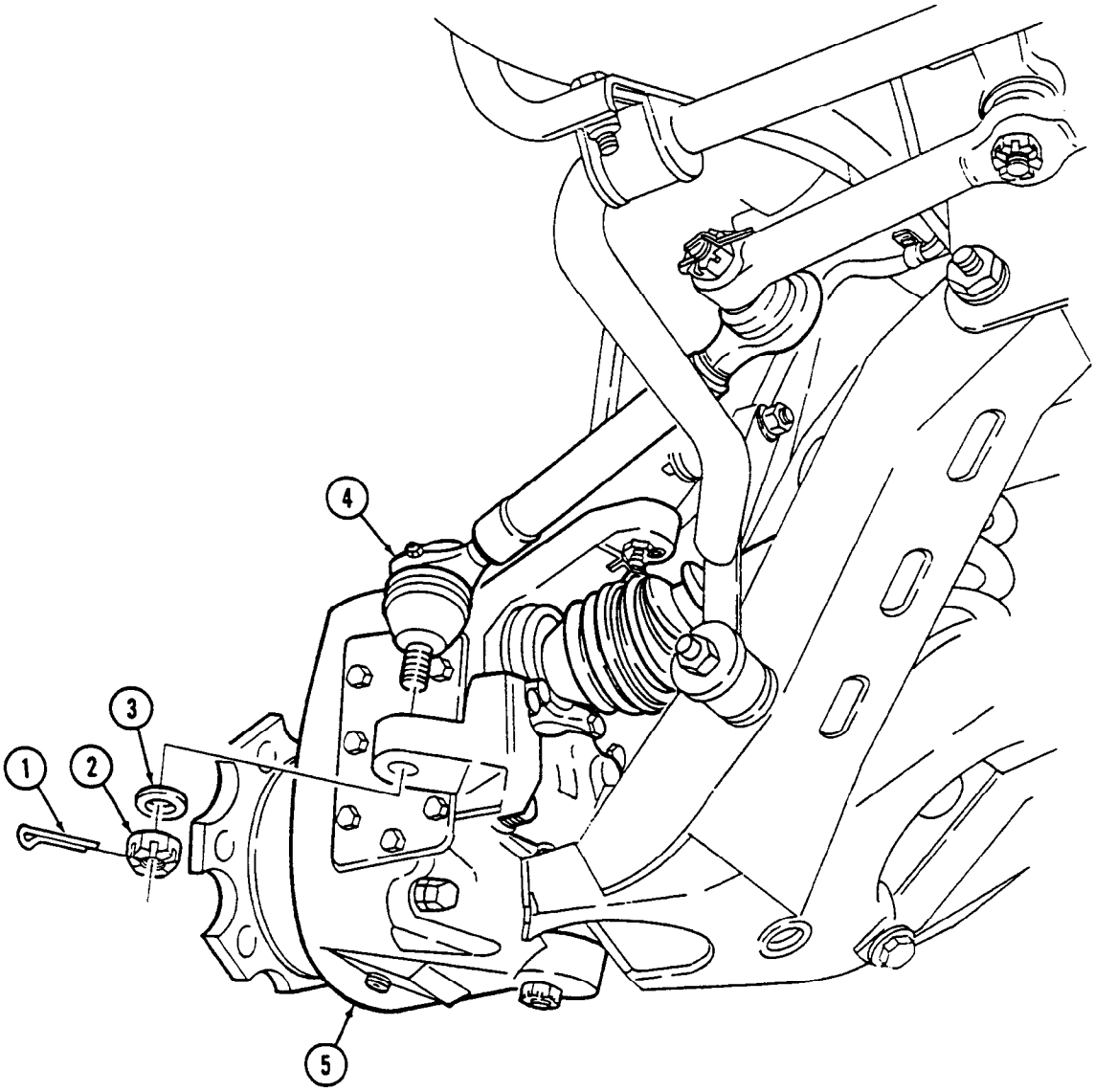

6-9. GEARED HUB REPLACEMENT (Cont'd)

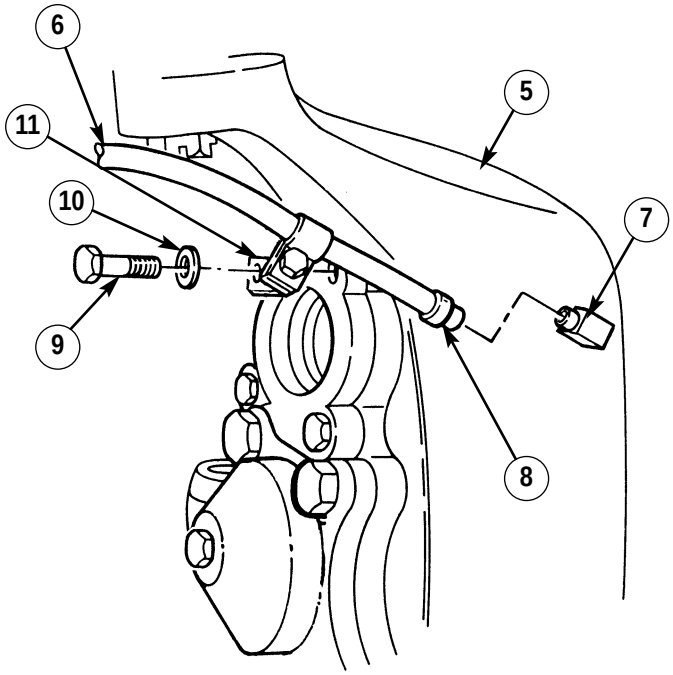

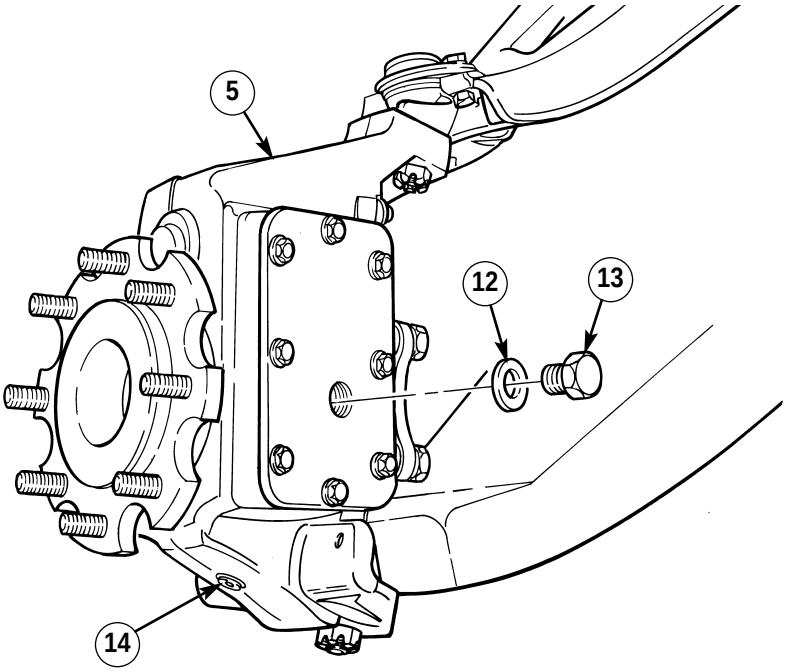

FOLLOW-ON TASKS:
- Install steering stop (para. 6-17).
- Install wheel (para. 8-3).
- Check alignment (paras. 8-9 and 8-10).

6-10. GEARED HUB INPUT SEAL REPLACEMENT

This task covers:

a. Removal **b. Installation**

INITIAL SETUP:

Tools

General mechanic's tool kit:
automotive (Appendix B, Item 1)
Maintenance and repair shop equipment:
automotive (Appendix B, Item 2)
Vise insert (Appendix B, Item 160)

Special Tools

Input seal installer (Appendix B, Item 107)
Driver handle (Appendix B, Item 60)

Materials/Parts

Input seal (Appendix G, Item 297)
Lubricating oil (Appendix C, Item 41)

Manual References

TM 9-2320-387-24P

Equipment Condition

Halfshaft removed (para. 6-7).

Maintenance Level

Unit

a. Removal

NOTE

Shim gaskets must be reused to maintain proper drive gear bearing adjustment.

1. Remove capscrew (1), washer (2), and vent line bracket (3) from drive gear retainer (4).
2. Remove three capscrews (1), washers (2), drive gear retainer (4), and shim gasket(s) (5) from geared hub (6).
3. Install drive gear retainer (4) in vise with inserts and remove input seal (7). Discard input seal (7).

b. Installation

1. Using driver handle and input seal installer, install input seal (7) in drive gear retainer (4). Ensure radius on outer diameter of input seal (7) faces toward inside of geared hub (6).
2. Install shim gasket(s) (5) and drive gear retainer (4) on geared hub (6) with three washers (2) and capscrews (1). Tighten capscrews (1) to 38 lb-ft (52 N·m).
3. Install vent line bracket (3) on drive gear retainer (4) with washer (2) and capscrew (1). Tighten capscrew (1) to 38 lb-ft (52 N·m).
4. Coat lip of input seal (7) with lubricating oil.

6-10. GEARED HUB INPUT SEAL REPLACEMENT (Cont'd)

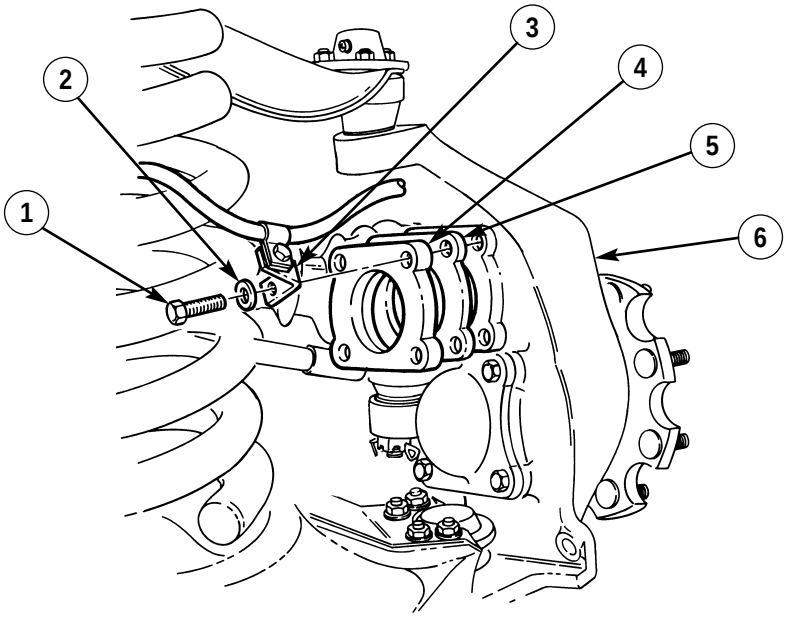

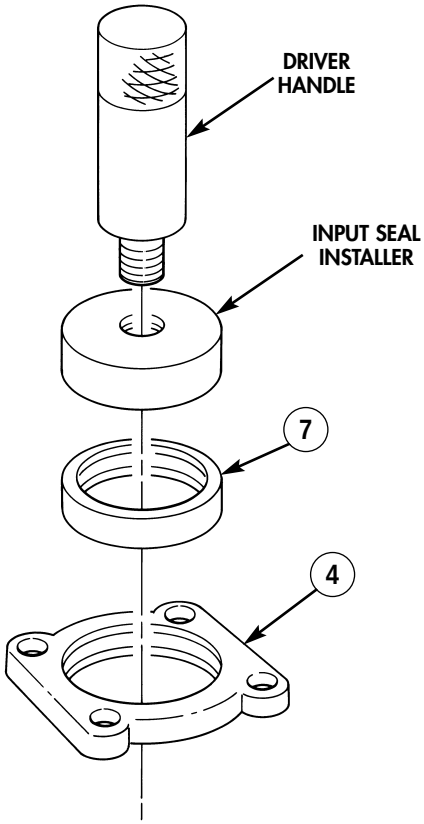

FOLLOW-ON TASK: Install halfshaft (para. 6-7).

6-11. GEARED HUB SPINDLE SEAL REPLACEMENT

This task covers:

a. Removal **b. Installation**

INITIAL SETUP:

Tools

General mechanic's tool kit:
automotive (Appendix B, Item 1)
Maintenance and repair shop equipment:
automotive (Appendix B, Item 2)

Special Tools

Spindle seal installer (Appendix B, Item 109)
Driver handle (Appendix B, Item 60)
Wrench (Appendix B, Item 108)

Materials/Parts

Lockwasher (Appendix G, Item 170)
Seal (Appendix G, Item 290)
Grease (Appendix C, Item 34)
Sealing compound, anaerobic
(Appendix C, Item 58)
Lubricating oil (Appendix C, Item 42)
Sealing compound (Appendix C, Item 62)

Manual References

TM 9-2320-387-24P

Equipment Condition

Wheel removed (para. 8-3).

General Safety Instructions

Ensure locktab on lockwasher is bent completely into slot on retaining nut.

Maintenance Level

Unit

a. Removal

NOTE

Have drainage container ready to catch oil.

1. Remove drainplug (2) from geared hub (1) and drain geared hub (1). Install drainplug (2) in geared hub (1) and tighten to 8-13 lb-ft (11-18 N·m).

CAUTION

Do not use sharp objects to aid in removing steering arm cover.

NOTE

It may be necessary to lightly tap steering arm cover with mallet to loosen from geared hub.

2. Remove four capscrews (5), washers (4), and steering arm cover (3) from geared hub (1).

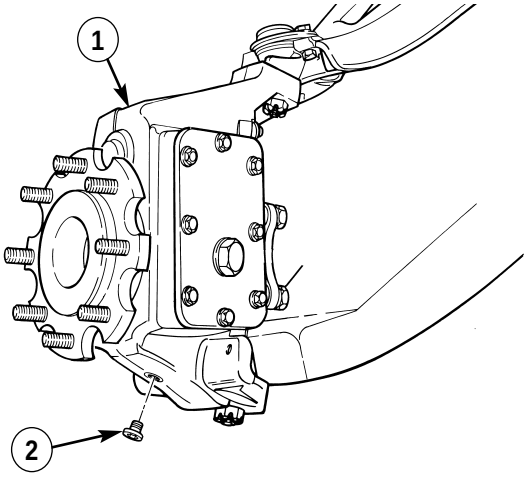

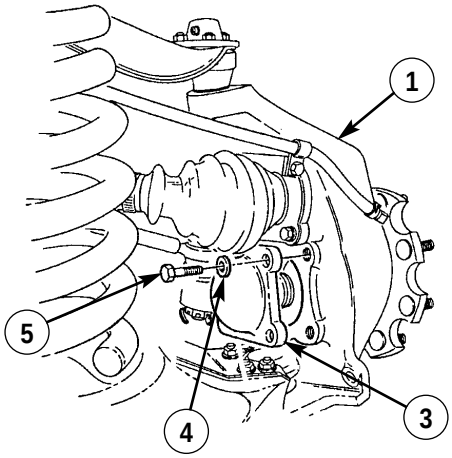

6-11. GEARED HUB SPINDLE SEAL REPLACEMENT (Cont'd)

NOTE

For new configuration, two locktabs on lockwasher must be bent away from retaining nut for removal.

3. Bend locktab on lockwasher (13) away from retaining nut (14).

NOTE

If four-slotted retaining nut TN-07 is present, it is recommended to replace it with eight-slotted retaining nut 12342680.

4. Using retaining nut wrench, remove retaining nut (14), lockwasher (13), and keyed washer (12) from spindle (7). Discard lockwasher (13)
5. Remove spindle (7), spacer (6), bearing (11), and spacer (10) from geared hub (1).
6. Remove spindle seal (15) from geared hub (1). Discard spindle seal (15).
7. Inspect spindle (7) for rough or corroded sealing surface (8). Replace geared hub (1) (para. 6-9) if spindle (7) is damaged.
8. Inspect bearings (9) and (11) for damage. Replace geared hub (1) (para. 6-9) if bearing (9) or (11) is damaged.

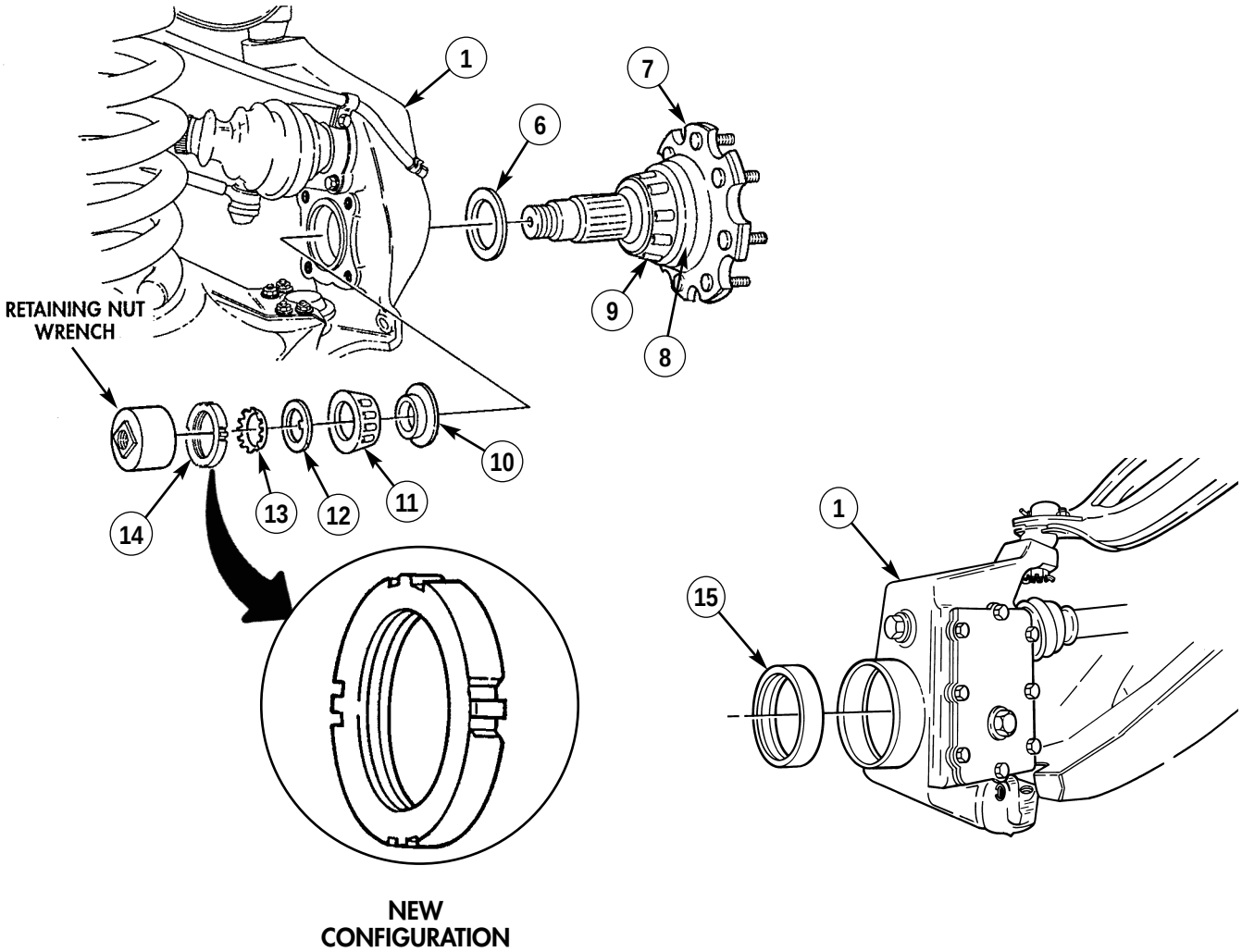

6-11. GEARED HUB SPINDLE SEAL REPLACEMENT (Cont'd)

b. Installation

1. Using driver handle and spindle seal installer, install spindle seal (1) in geared hub (2).
2. Coat spindle seal (1) with lubricating oil.
3. Install spacer (3) and spindle (4) in geared hub (2).
4. Apply grease to face of retaining nut (9).

NOTE

- If four-slotted retaining nut is present, it is recommended to replace it with eight-slotted retaining nut 12342680.
- Ensure lip of spacer faces the bearing for a proper fit.

5. Install spacer (5), bearing (6), keyed washer (7), lockwasher (8), and retaining nut (9) on spindle (4).
6. Using retaining nut wrench, tighten retaining nut (9) to 35-45 lb ft (47-61 N·m).
7. Rotate spindle (4) five full rotations clockwise and five full rotations counterclockwise to properly seat bearings.
8. Loosen retaining nut (9) until it is finger-tight, then retighten nut to 23-27 lb-ft (31-37 N·m).

WARNING

Ensure locktab on lockwasher is bent completely into slot on retaining nut. Eight-slotted retaining nut provides additional security by enabling two locktabs on lockwasher to be bent into slots on retaining nut. Failure to do this may cause injury to personnel or damage to equipment.

NOTE

- For new configuration, two locktabs on lockwasher must be bent into slots on retaining nut.
- It may be necessary to slightly loosen or tighten retaining nut to gain proper alignment with locktabs.

9. Determine which locktab(s) (10) on lockwasher (8) aligns with slot(s) (11) in retaining nut (9). Bend locktab(s) (10) into slot(s) (11) on retaining nut (9).

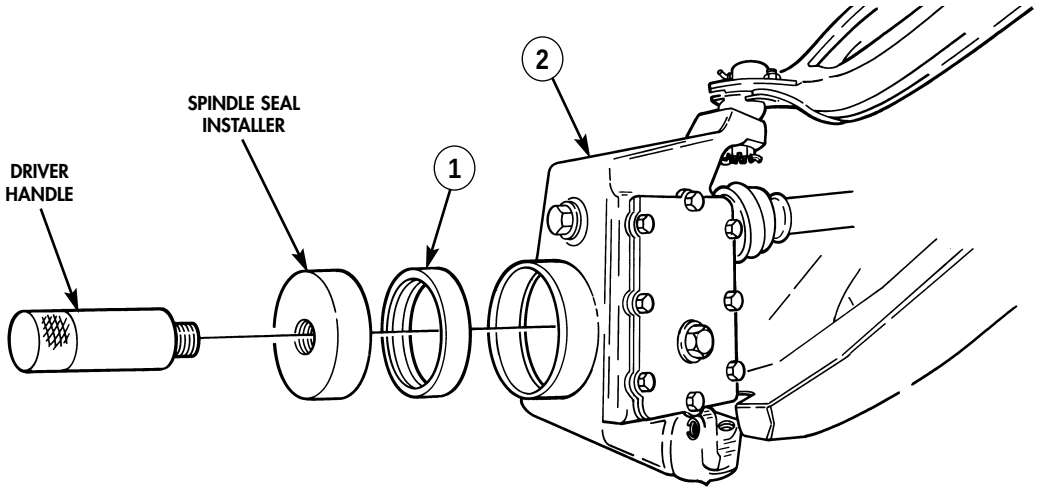

6-11. GEARED HUB SPINDLE SEAL REPLACEMENT (Cont'd)

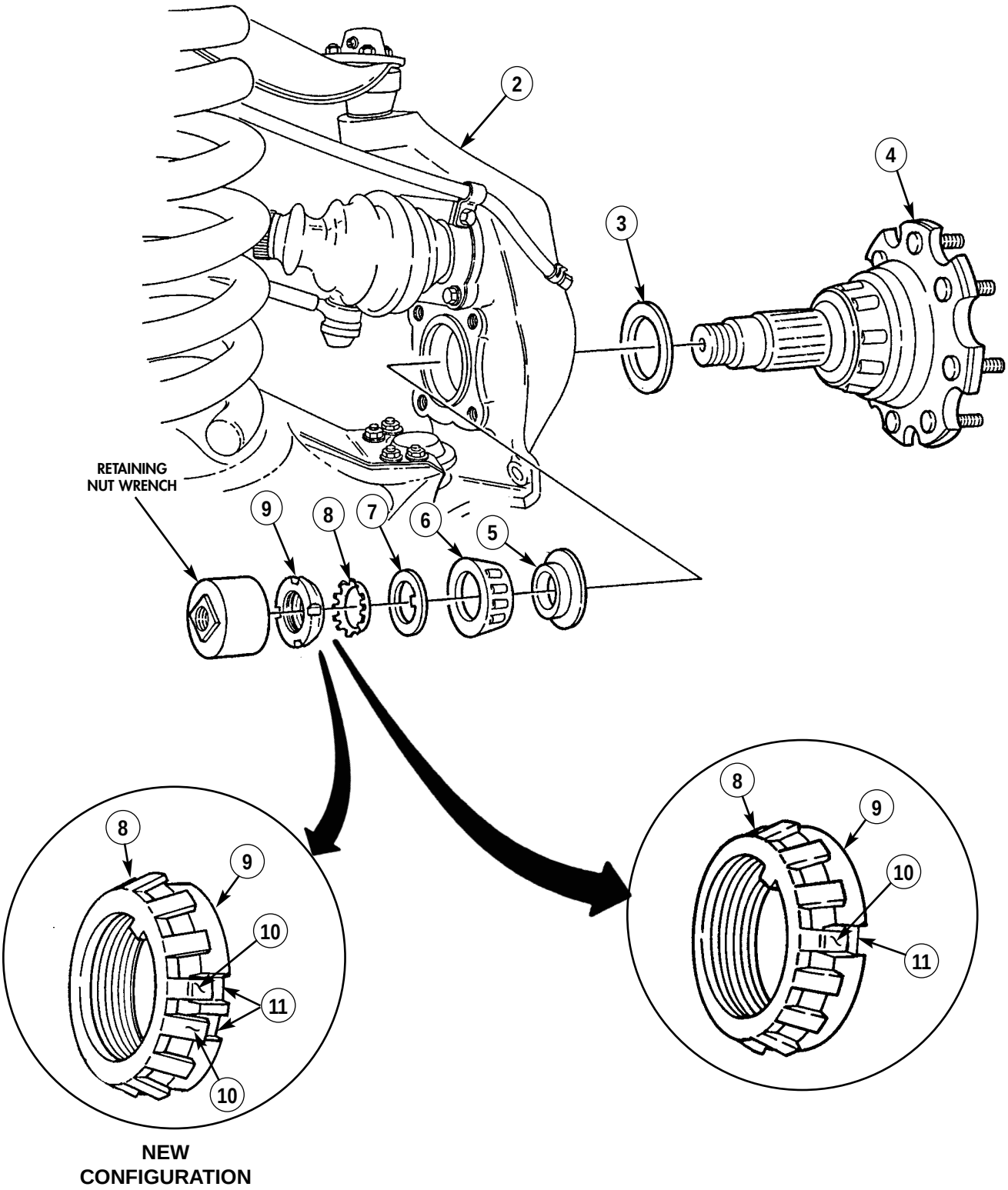

6-11. GEARED HUB SPINDLE SEAL REPLACEMENT (Cont'd)

CAUTION

When installing steering arm cover, ensure seal in cover is aligned on spindle extension. Damage to seal will result.

NOTE

Immediately install steering arm cover after application of sealing compound.

10. Clean sealing surfaces on geared hub (1) and steering arm cover (2). Apply anaerobic sealing compound to steering arm cover (2) and install steering arm cover (2) on geared hub (1).
11. Apply sealing compound to threads of capscrews (4) and install steering arm cover (2) on geared hub (1) with four washers (3) and capscrews (4). Tighten capscrews (4) to 65 lb-ft (88 N·m).
12. Remove fill plug (5) and washer (6) from geared hub (1).
13. Fill geared hub (1) to proper oil level (para. 2-12).
14. Install washer (6) and fill plug (5) on geared hub (1). Tighten fill plug (5) to 8-13 lb-ft (11-18 N·m).

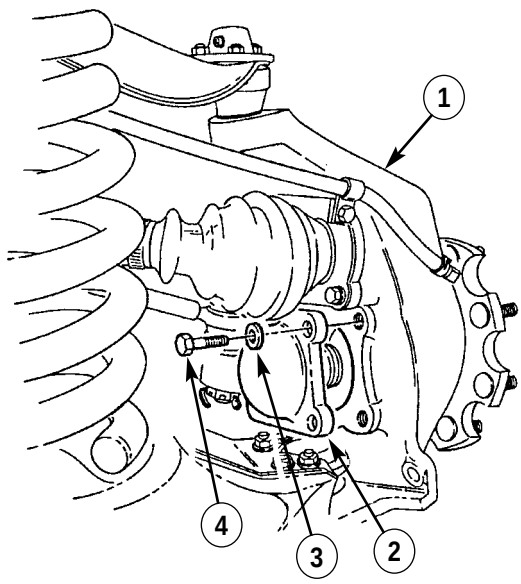

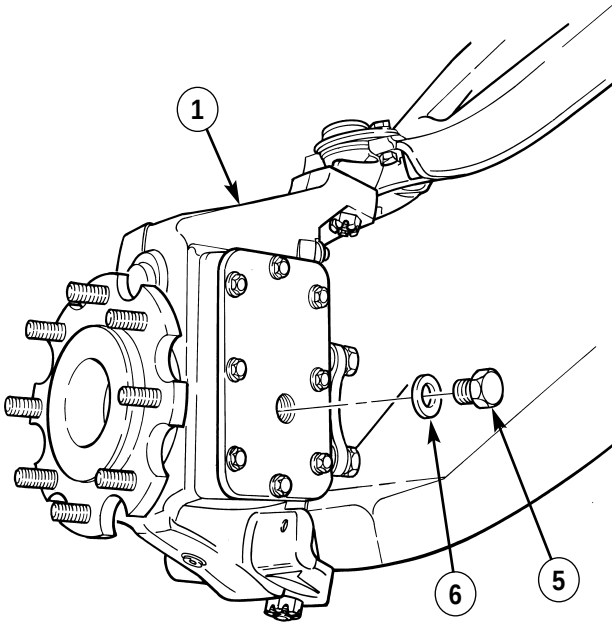

FOLLOW-ON TASK: Install wheel (para. 8-3).

6-12. GEARED HUB SPINDLE BEARING ADJUSTMENT

This task covers:

Adjustment

INITIAL SETUP:

Tools

General mechanic's tool kit:
automotive (Appendix B, Item 1)
Maintenance and repair shop equipment:
automotive (Appendix B, Item 2)

Special Tools

Wrench (Appendix B, Item 108)

Materials/Parts

Lockwasher (Appendix G, Item 170)
Sealing compound, anaerobic
(Appendix C, Item 58)
Sealing compound (Appendix C, Item 62)
Grease (Appendix C, Item 34)

Manual References

TM 9-2320-387-10
TM 9-2320-387-24P

Equipment Condition

Wheel removed (para. 8-3).

Maintenance Level

Unit

General Safety Instructions

Ensure locktab on lockwasher is bent completely into slot on retaining nut.

Adjustment

NOTE

Have drainage container ready to catch oil.

1. Remove drainplug (2) from geared hub (1) and drain geared hub (1). Install drainplug (2) in geared hub (1) and tighten to 8-13 lb-ft (11-18 N·m).
2. Remove four capscrews (5), washers (4), and steering arm cover (3) from geared hub (1).

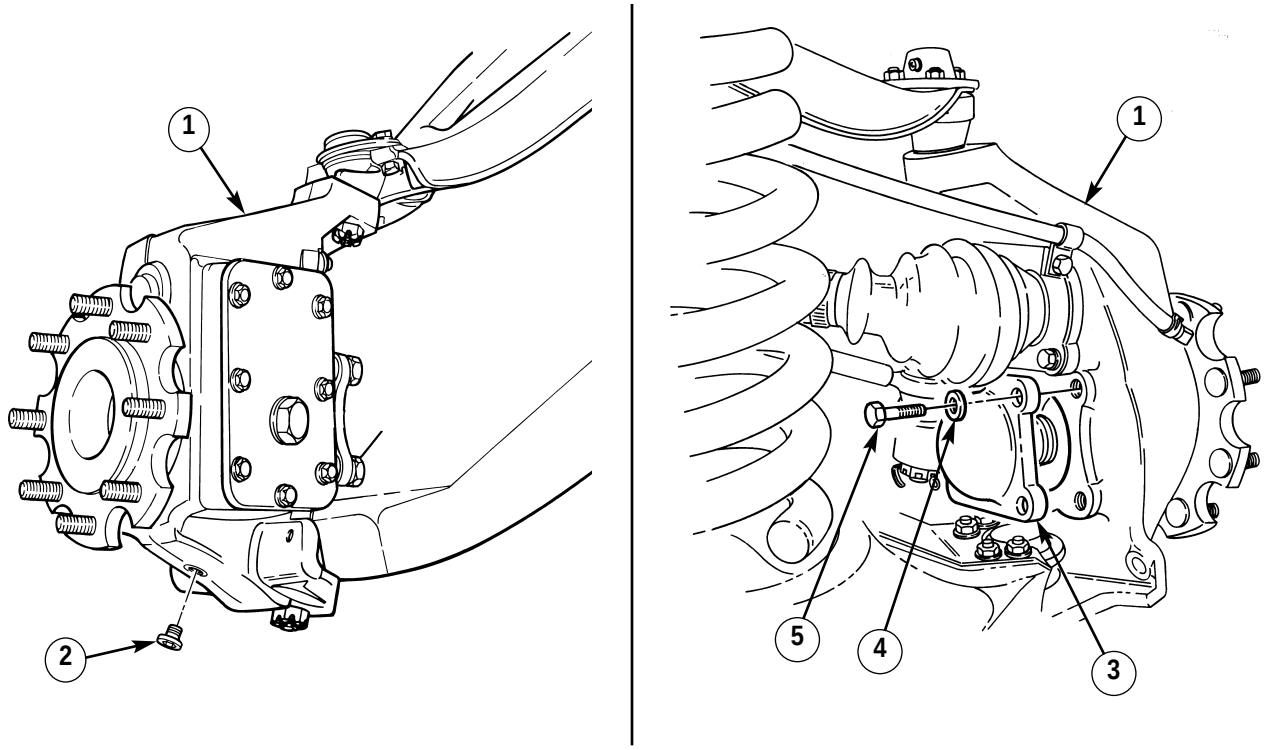

6-12. GEARED HUB SPINDLE BEARING ADJUSTMENT (Cont'd)

NOTE

For new configuration, two locktabs on lockwasher must be bent away from retaining nut for removal.

3. Bend locktab(s) (5) on lockwasher (2) away from retaining nut (3).
4. Using retaining nut wrench, remove retaining nut (3) and lockwasher (2) from spindle (1). Discard lockwasher (2).

NOTE

If four-slotted retaining nut TN-07 is present, it is recommended to replace it with eight-slotted retaining nut 12342680.

5. Apply grease to face of retaining nut (3) and install lockwasher (2) and retaining nut (3) on spindle (1).
6. Using retaining nut wrench, tighten retaining nut (3) to 35-45 lb-ft (47-61 N·m).
7. Rotate spindle (1) five full rotations clockwise and five full rotations counterclockwise to properly seat bearings.
8. Loosen retaining nut (3) until it is finger-tight, then retighten nut to 23-27 lb-ft (31-37 N·m).

WARNING

Ensure locktab on lockwasher is bent completely into slot on retaining nut. Eight-slotted retaining nut provides additional security by enabling two locktabs on lockwasher to be bent into slots on retaining nut. Failure to do this may cause injury to personnel or damage to equipment.

NOTE

- For new configuration, two locktabs on lockwasher must be bent into slots on retaining nut.
- It may be necessary to slightly loosen or tighten retaining nut to gain proper alignment with locktabs.

9. Determine which locktab(s) (5) on lockwasher (2) aligns with slot(s) (4) in retaining nut (3). Bend locktab(s) (5) into slot(s) (4) on retaining nut (3).

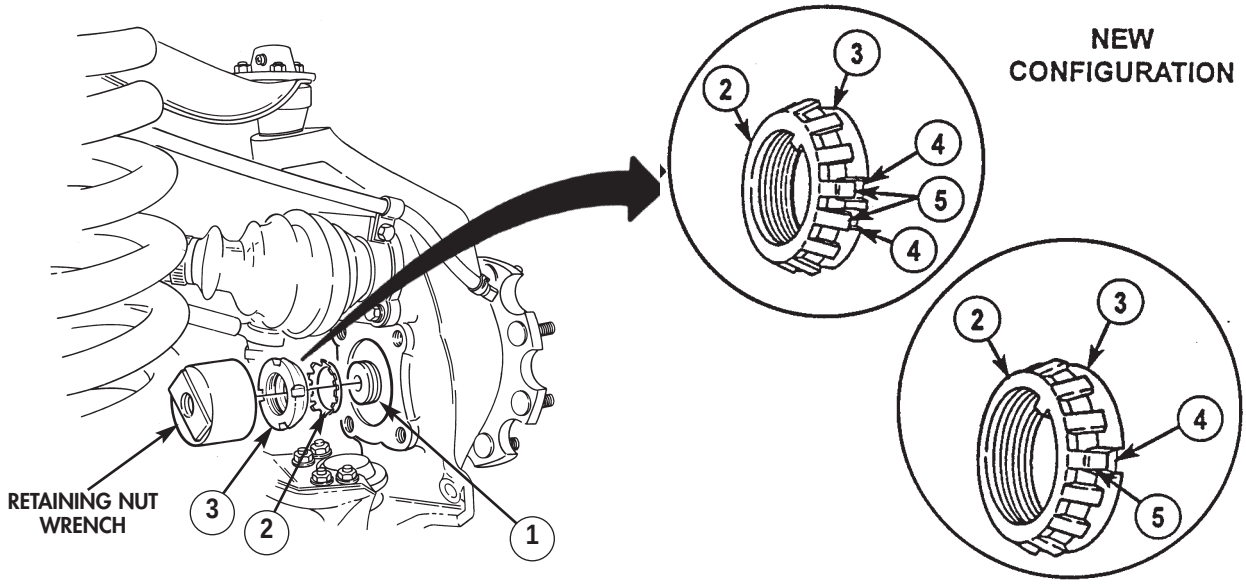

6-12. GEARED HUB SPINDLE BEARING ADJUSTMENT (Cont'd)

CAUTION

When installing steering arm cover, ensure seal in cover is aligned on spindle extension. Damage to seal will result if not aligned.

NOTE

Immediately install steering arm cover after application of sealant.

10. Clean sealing surfaces on geared hub (6) and steering arm cover (9). Apply anaerobic sealant to steering arm cover (9) and install steering arm cover (9) on geared hub (6).
11. Apply sealing compound to threads of four capscrews (11) and install steering arm cover (9) on geared hub (6) with four washers (10) and capscrews (11). Tighten capscrews (11) to 65 lb-ft (88 N·m).
12. Remove fill plug (7) and washer (8) from geared hub (6).
13. Fill geared hub (6) to proper oil level (para. 2-12).
14. Install washer (8) and fill plug (7) on geared hub (6). Tighten fill plug (7) to 8-13 lb-ft (11-18 N·m).

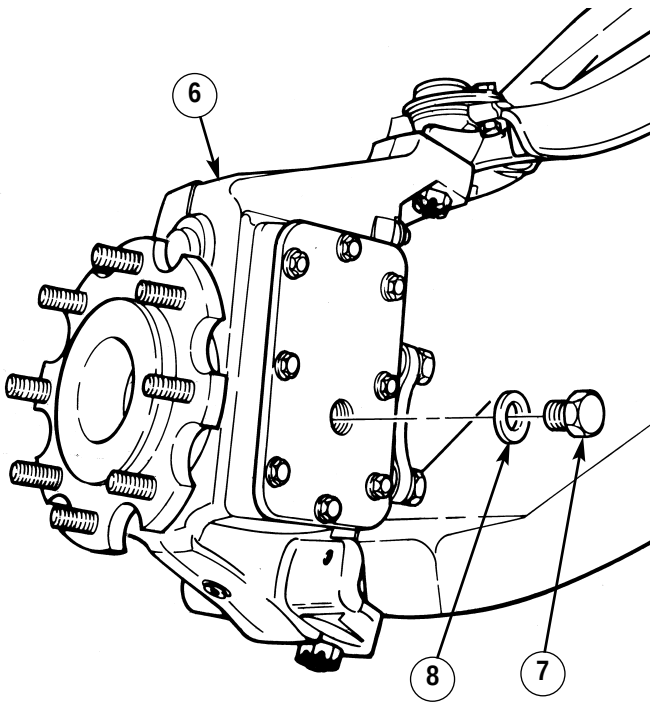

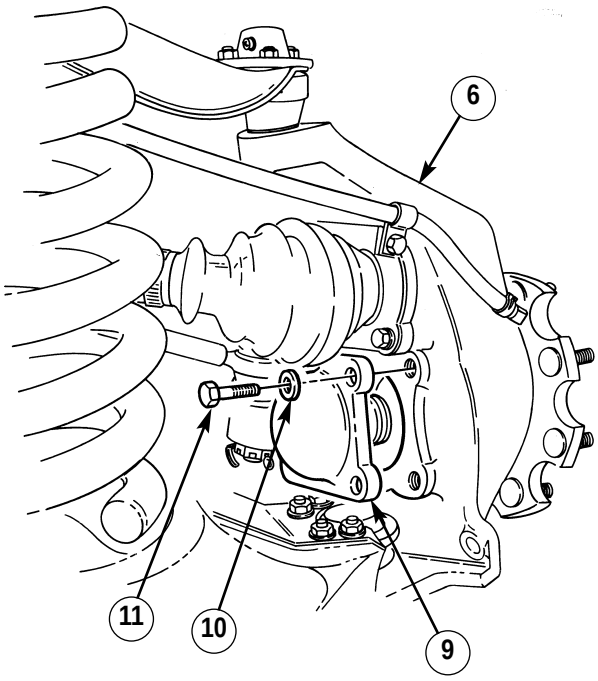

FOLLOW-ON TASK: Install wheel (para. 8-3).

6-13. WHEEL STUD REPLACEMENT

This task covers:

a. Removal **b. Installation**

INITIAL SETUP:

Tools
General mechanic's tool kit:
automotive (Appendix B, Item 1)

Materials/Parts
Hex-nut (Appendix G, Item 69)
Three flat washers (Appendix G, Item 33.1)

Manual References
TM 9-2320-387-24P

Equipment Condition
Wheel removed (para. 8-3).

General Safety Instructions
Always wear eye protection when replacing wheel studs.

Maintenance Level
Unit

WARNING

Always wear eye protection when replacing wheel studs. Severe eye injury may result if metal chips contact eyes.

a. Removal

1. Rotate spindle (3) to allow clearance for removal of stud (4) from spindle (3).
2. Drive stud (4) from spindle (3). Discard stud (4).

b. Installation

1. Align splines on stud (4) with splines in spindle (3) and install stud (4) in spindle (3).
2. Install three washers (2) and hex-nut (1) on stud (4).
3. Tighten hex-nut (1) until head of stud (4) seats against spindle (3).
4. Remove hex-nut (1) and washers (2). Discard hex-nut (1) and washers (2).

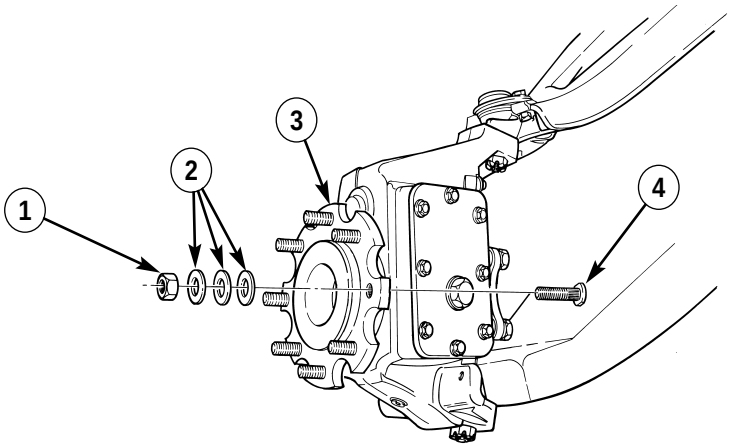

FOLLOW-ON TASK: Install wheel (para. 8-3).

6-14. DIFFERENTIAL VENT LINE REPLACEMENT

This task covers:

a. Removal

b. Installation

INITIAL SETUP:

Tools

General mechanic's tool kit: automotive (Appendix B, Item 1)

Maintenance Level

Unit

Manual References

TM 9-2320-387-24P

NOTE

The replacement procedure for differential vent lines is basically the same. This procedure covers the rear differential vent line.

a. Removal

1. Remove vent line (7) from differential fitting (6) and union fitting (1).
2. Remove two line clips (2) from vent line (3) and brake line (5).
3. Remove vent line (3) from union fittings (1) and (4).

b. Installation

1. Install vent line (3) on union fittings (1) and (4).
2. Install two line clips (2) on vent line (3) and brake line (5).
3. Install vent line (7) on differential fitting (6) and union fitting (1).

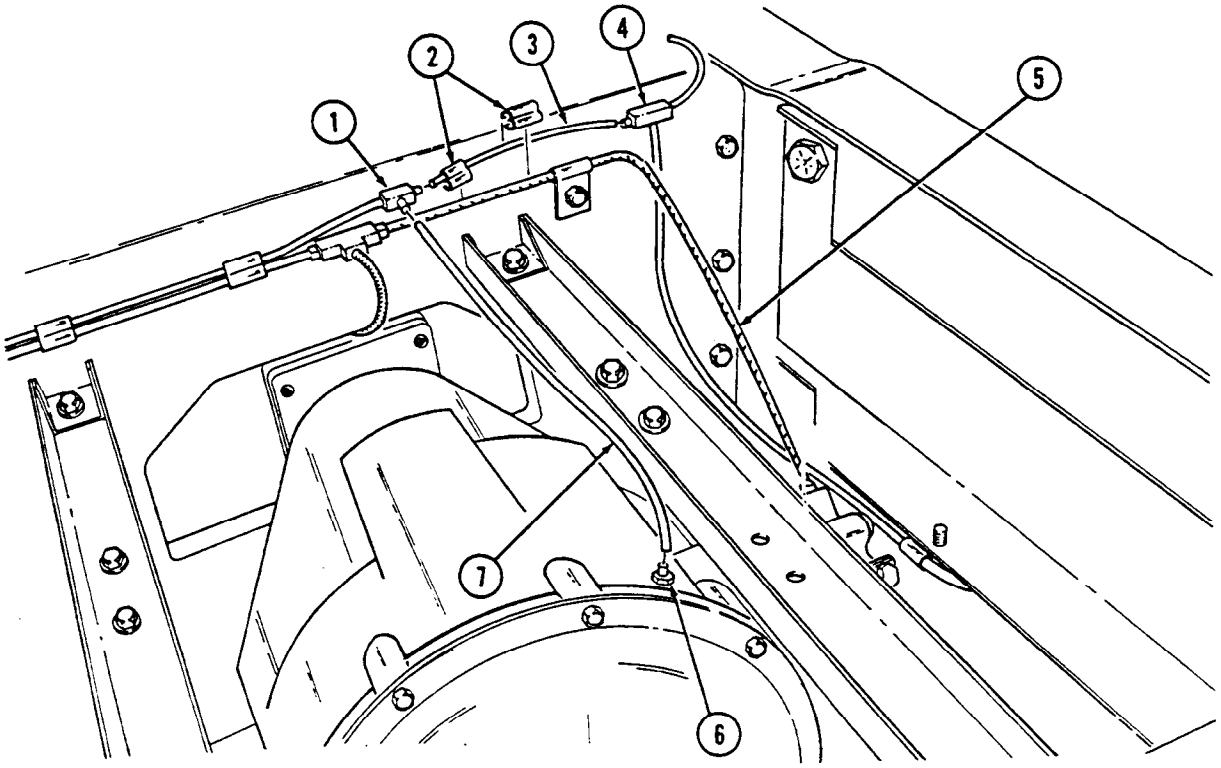

6-15. REAR GEARED HUB VENT LINE REPLACEMENT

This task covers:

a. Removal

b. Installation

INITIAL SETUP:

Tools
General mechanic's tool kit:
automotive (Appendix B, Item 1)

Maintenance Level
Unit

Manual References
TM 9-2320-387-24P

NOTE

The replacement procedure for each rear geared hub vent line is basically the same. This procedure covers the right rear geared hub vent line.

a. Removal

1. Disconnect vent line (4) from geared hub fitting (3).
2. Remove capscrew (7), clamp (6), and vent line (4) from bracket (5).
3. Remove capscrew (8), clamp (1), and vent line (4) from control arm (2).
4. Remove capscrew (10), clamp (9), and vent line (4) from bracket (11).
5. Remove capscrew (15), clamp (14), and vent line (4) from frame (13).
6. Remove vent line (4) from tee fitting (12).

b. Installation

1. Install vent line (4) on tee fitting (12) and geared hub fitting (3).
2. Install vent line (4) on frame (13) with clamp (14) and capscrew (15).
3. Install vent line (4) on bracket (11) with clamp (9) and capscrew (10).
4. Install vent line (4) on control arm (2) with clamp (1) and capscrew (8).

NOTE

Position clamp at a 45° angle toward the wheel before securing with capscrew.

5. Install vent line (4) on bracket (5) with clamp (6) and capscrew (7).

6-15. REAR GEARED HUB VENT LINE REPLACEMENT (Cont'd)

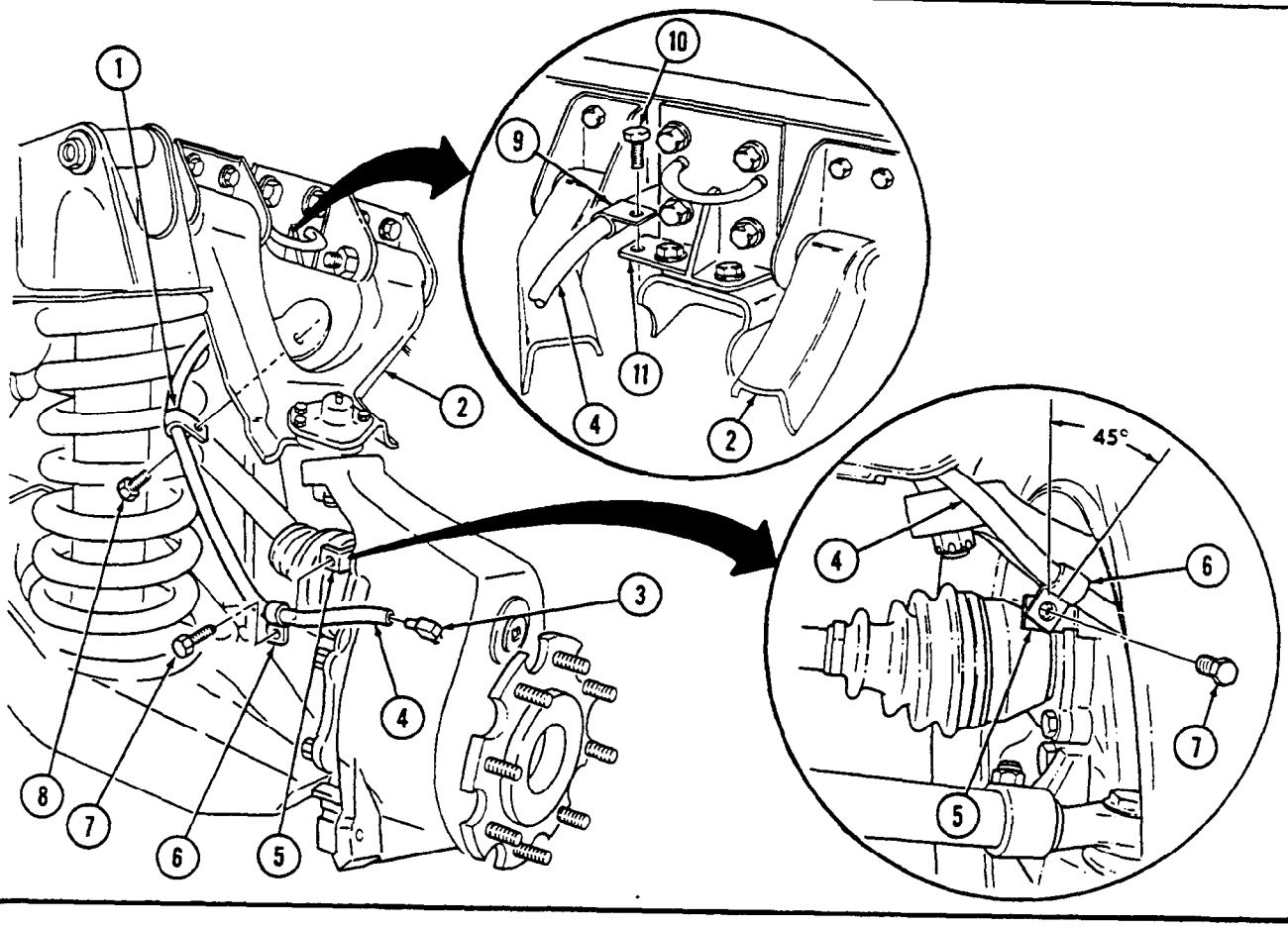

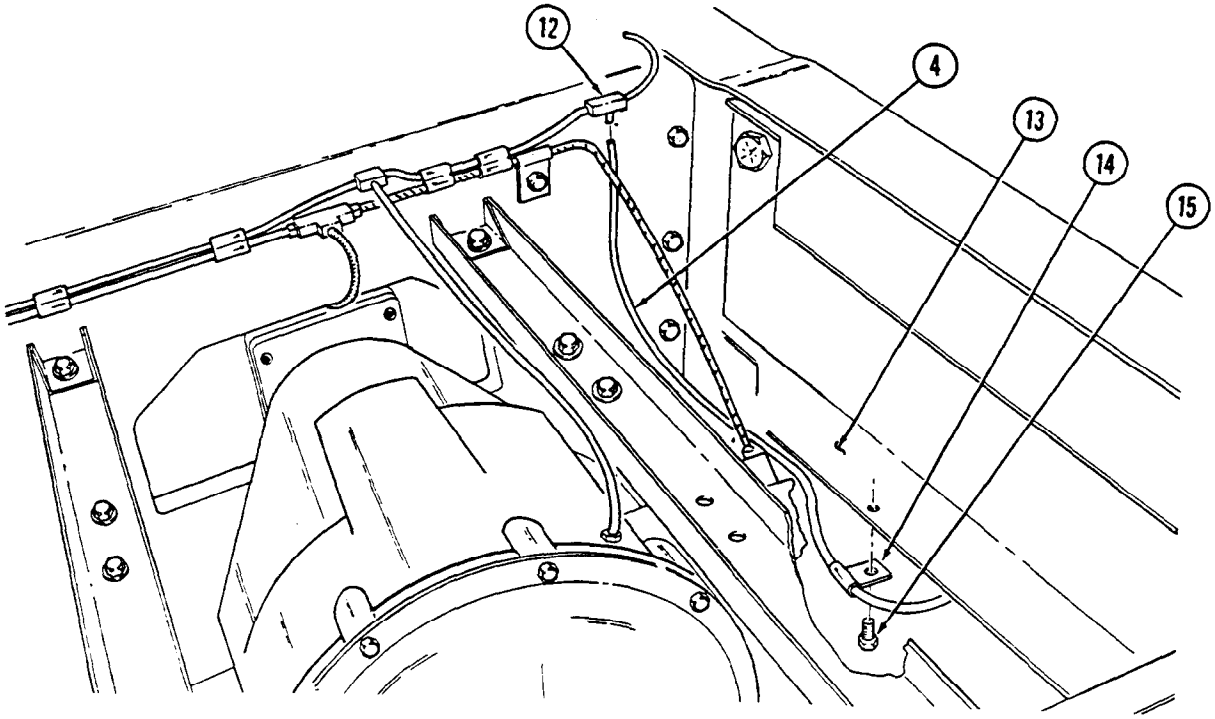

6-16. FRONT GEARED HUB VENT LINE REPLACEMENT

This task covers:

a. Removal

b. Installation

INITIAL SETUP:

Tools
General mechanic's tool kit: automotive (Appendix B, Item 1)

Manual References
TM 9-2320-387-24P

Equipment Condition
Wheel removed (para. 8-3).

Maintenance Level
Unit

a. Removal

NOTE

- The replacement procedure for each front geared hub vent line is basically the same. This procedure covers the right front geared hub vent line.
- Mark clamp position before loosening to ensure clamps are properly positioned during installation.

1. Remove four screws (7) and clamps (3) from frame (13), front control arm (2), and geared hub (8).
2. Loosen two clamps (6) and disconnect front vent line (4) from elbow (5) and tee fitting (1).
3. Remove nut (12), washer (11), screw (10), clamp (9), and front vent line (4) from control arm (2).

b. Installation

1. Install clamp (9) and front vent line (4) on control arm (2) with screw (10), washer (11), and nut (12).
2. Connect vent line (4) to elbow (5) and tee fitting (1) with two clamps (6).
3. Install vent line (4) and four clamps (3) on geared hub (8), control arm (2), and frame (13) with four screws (7).

6-16. FRONT GEARED HUB VENT LINE REPLACEMENT (Cont'd)

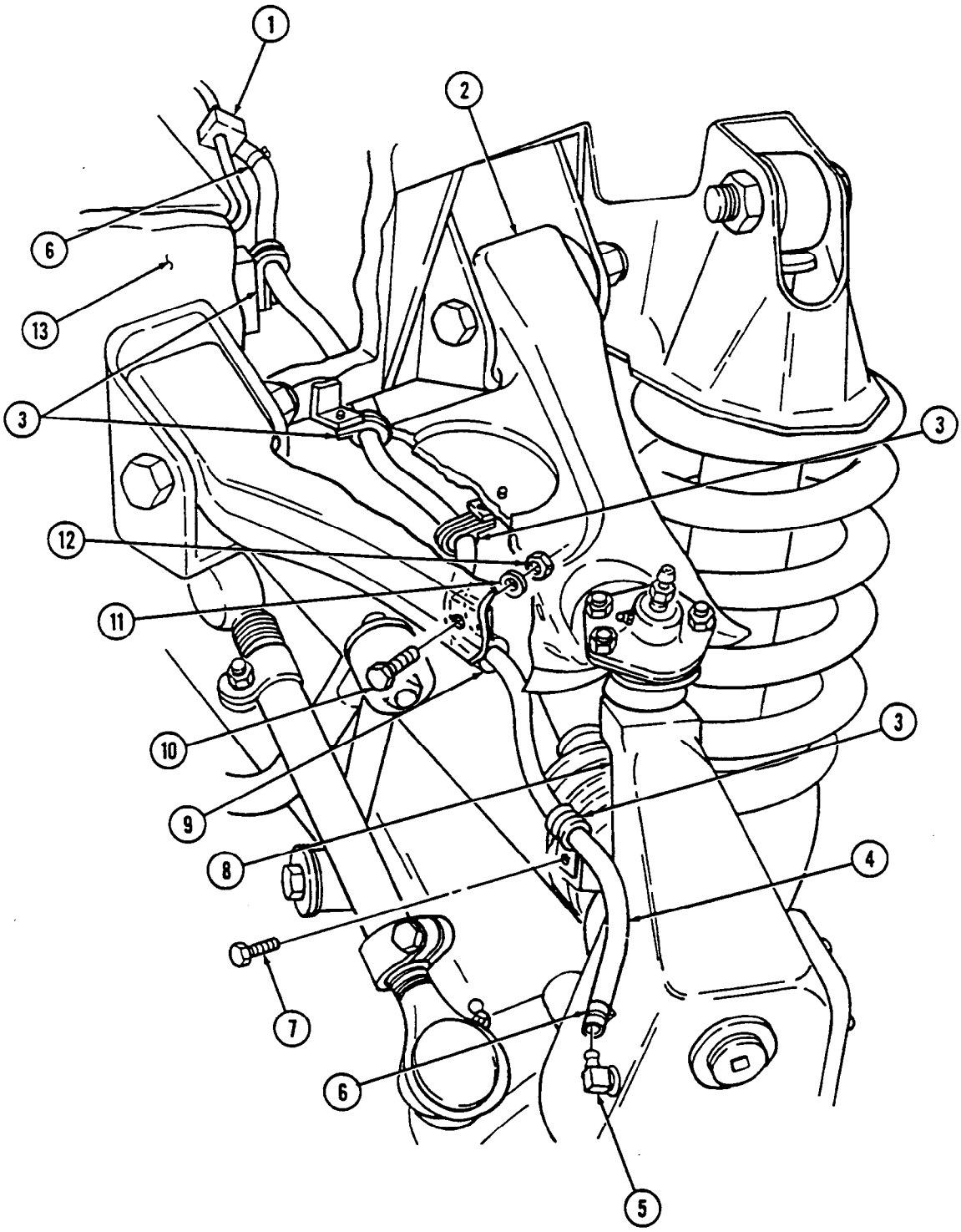

FOLLOW-ON TASK: Install wheel (para. 8-3).

6-17. STEERING STOP MAINTENANCE

This task covers:

a. Removal
b. Installation
c. Adjustment

INITIAL SETUP:

Tools
General mechanic's tool kit:
automotive (Appendix B, Item 1)
Maintenance and repair shop equipment:
automotive (Appendix B, Item 2)

Materials/Parts
Sealing compound (Appendix C, Item 62)
Chalk (Appendix C, Item 20)

Personnel Required
One mechanic
One assistant

Manual References
TM 9-2320-387-24P

Maintenance Level
Unit

a. Removal

1. Loosen jamnut (2) and remove steering stop capscrew (3) and jamnut (2) from geared hub (1).
2. Remove jamnut (2) from capscrew (3).

b. Installation

1. Apply sealing compound to capscrew (3).
2. Install jamnut (2) on capscrew (3).
3. Install capscrew (3) and jamnut (2) on geared hub (1). Tighten capscrew (3) finger-tight.

c. Adjustment

NOTE

Prior to adjustment, ensure length of each tie rod is the same. If tie rod lengths are not the same ± 1/8 in. (3 mm), check toe-in alignment (para. 8-9).

1. Draw a reference chalk line (6) 30 ft. long (9 m). Mark this line A.
2. Position vehicle so that center of left rear and left front tires are positioned directly on reference line A (6).
3. Using a protractor, draw a second reference line B (5) at 34°. Mark this line B.
4. Again, using a protractor, draw a third reference line C (4) at 36°. Mark this line C.
5. Roll vehicle forward until center of left front tire is over intersection of lines A, B, and C.
6. Turn steering wheel full left.
7. If the centerline of front and rear of left front tire (7) is over area between lines B and C, no adjustment is necessary.
8. If centerline of front and rear of left front is not over area between lines B and C, loosen jamnut (2) and turn capscrew (3) all the way in.
9. Turn steering wheel until centerline of front and rear of tire (7) is over area between lines B and C.
10. Loosen capscrew (3) until head makes contact with wheel stop (9) on lower control arm (8).
11. Secure capscrew (3) with jamnut (2).
12. Repeat adjustment procedure for opposite side.

6-17. STEERING STOP MAINTENANCE (Cont'd)

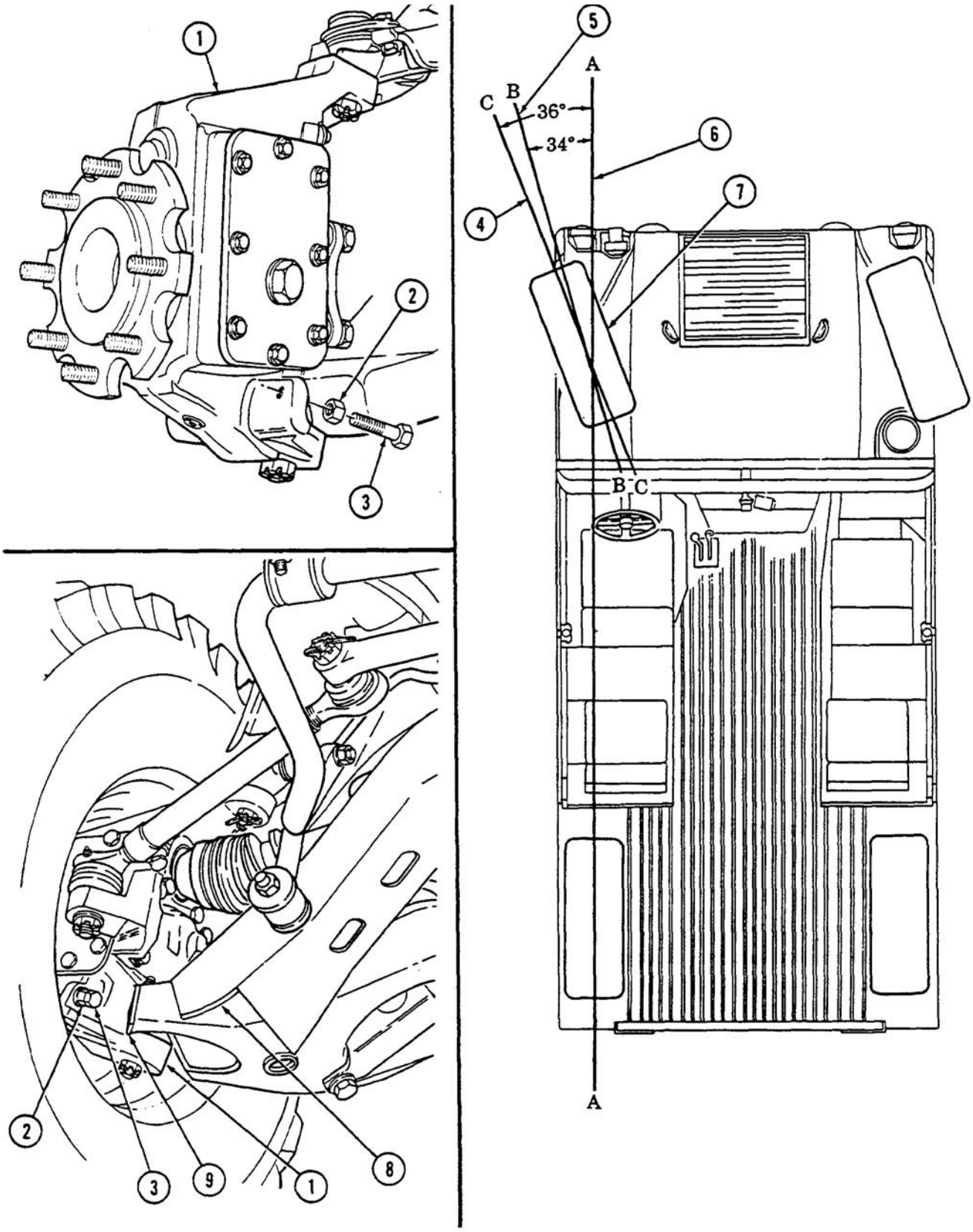

6-18. DIFFERENTIAL COVER MAINTENANCE

This task covers:

a. Removal
b. Cleaning and Inspection
c. Installation

INITIAL SETUP:

Tools
General mechanic's tool kit:
automotive (Appendix B, Item 1)
Maintenance and repair shop equipment:
automotive (Appendix B, Item 2)

Materials/Parts
RTV silicone compound (Appendix C, Item 74)
Drycleaning solvent (Appendix C, Item 26)

Manual References
TM 9-2320-387-24P

Equipment Condition
Rear cooler hoses removed (para. 3-84 or 3-85) if applicable.

General Safety Instructions
Drycleaning solvent is flammable and will not be used near an open flame.

Maintenance Level
Unit

NOTE

- Have drainage container ready to catch fluid.
- All original differential covers without cooler assemblies will be replaced with new differential covers with cooler assemblies.
- This procedure covers differential covers with cooler assemblies.
- Differential covers with cooler assemblies are serviced as an assembly only.
- Removal of old differential covers without cooler assemblies is basically the same.

a. Removal

1. Remove drainplug (4) from differential assembly (5) and drain differential assembly (5).

1.1 Remove fill plug (2) if necessary.

2. Remove twelve capscrews (3) and cooler cover assembly (1) from differential assembly (5).

b. Cleaning and Inspection

WARNING

Drycleaning solvent is flammable and will not be used near an open flame. A fire extinguisher will be kept nearby when the solvent is used. Use only in well-ventilated places. Failure to do this may result in injury to personnel and/or damage to equipment.

1. Using drycleaning solvent, clean cooler cover assembly (1), twelve capscrews (3), and differential assembly (5).
2. Inspect differential cooler cover assembly (1) and internal cooler for cracks, wear, or breaks. Replace cooler cover as an assembly (1) if cracked, worn, or broken

6-18. DIFFERENTIAL COVER MAINTENANCE (Cont'd)

c. Installation

1. Apply RTV silicone compound to face of rear differential (6).
2. Install cooler cover assembly (1) on rear differential by rotating cooler cover assembly (1) upward from below and secure with twelve capscrews (3).
3. Install drainplug (4) on rear differential (5) and tighten to 13-18 lb-ft (18-24 N•m).

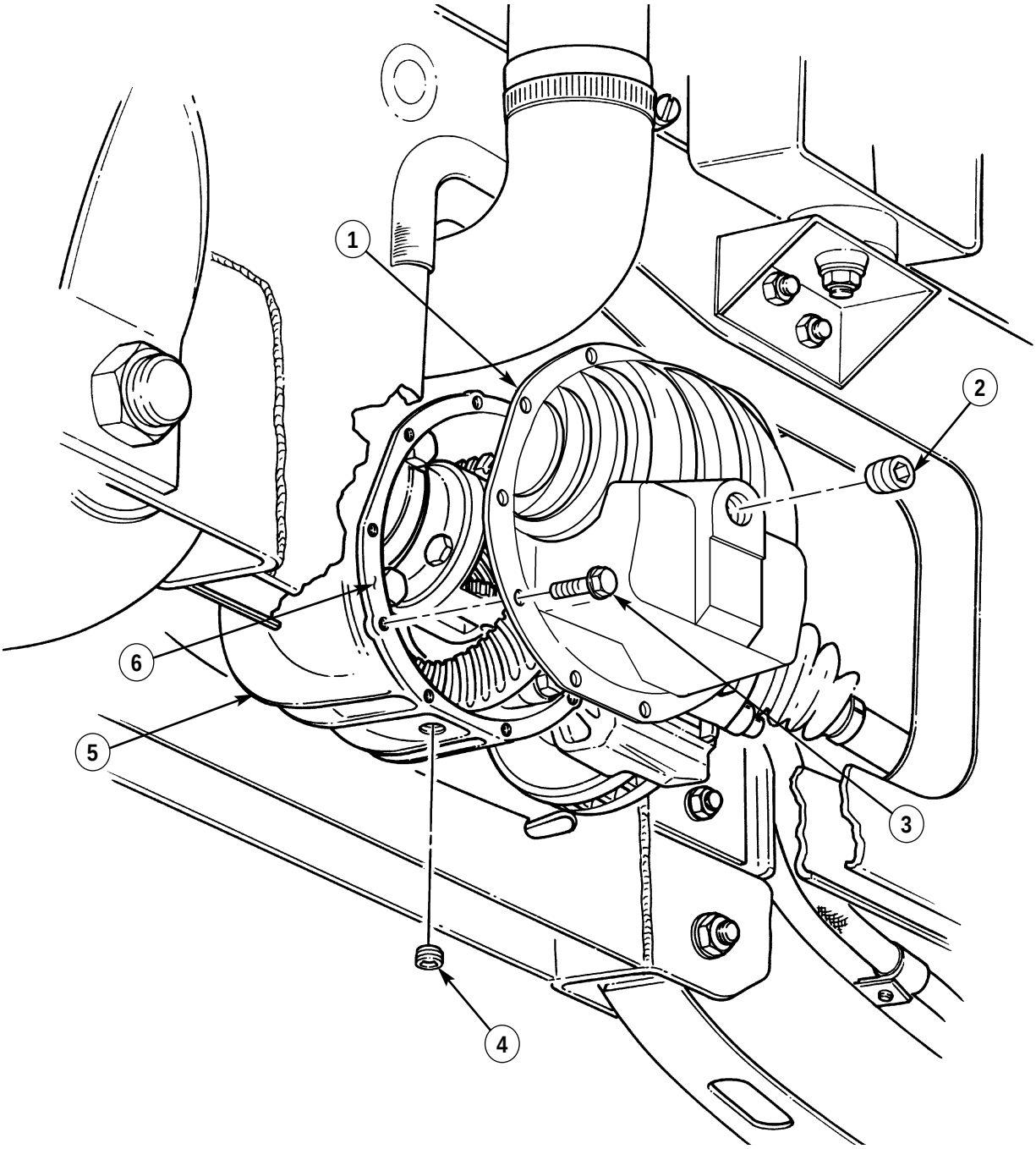

FOLLOW-ON TASKS:
- Install cooler hoses (para. 3-84 or 3-85).
- Fill differential to proper level (para. 2-12).

Section III. SUSPENSION MAINTENANCE

6-19. SUSPENSION MAINTENANCE TASK SUMMARY

TASK PARA.	PROCEDURES	PAGE NO.
6-20.	Stabilizer Bar Replacement	6-49
6-21.	Stabilizer Bar Link Replacement	6-50
6-22.	Radius Rod Replacement	6-51
6-23.	Upper Ball Joint Maintenance	6-52
6-24.	Lower Ball Joint Maintenance	6-54
6-25.	Upper Control Arm Replacement	6-56
6-26.	Lower Control Arm Replacement	6-58
6-27.	Coil Spring Replacement	6-60
6-28.	Shock Absorber Replacement	6-62

6-20. STABILIZER BAR REPLACEMENT

This task covers:

a. Removal **b. Installation**

INITIAL SETUP:

Tools

General mechanic's tool kit: automotive (Appendix B, Item 1)
Maintenance and repair shop equipment: automotive (Appendix B, Item 2)

Materials/Parts

Two locknuts (Appendix G, Item 83)

Manual References

TM 9-2320-387-24P

Maintenance Level

Unit

a. Removal

1. Remove two locknuts (1), nuts (5), and six washers (2) from two bar links (3) and stabilizer bar (11). Discard locknuts (1). Remove two bar links (3) and pins (4) from stabilizer bar (11).
2. Remove four nuts (9), washers (10), two clamps (8), and stabilizer bar (11) from two frame brackets (6).
3. Remove two stabilizer bar bushings (7) from stabilizer bar (11).

b. Installation

1. Install two stabilizer bar bushings (7) on stabilizer bar (11).
2. Install stabilizer bar (11) on two frame brackets (6) with two clamps (8), four washers (10), and nuts (9). Tighten nuts (9) to 60 lb-ft (81 N·m).
3. Install two pins (4) in bar links (3).
4. Install stabilizer bar (11) on two bar links (3) with six washers (2), two nuts (5), and locknuts (1). Tighten locknuts (1) to 75 lb-ft (102 N·m).

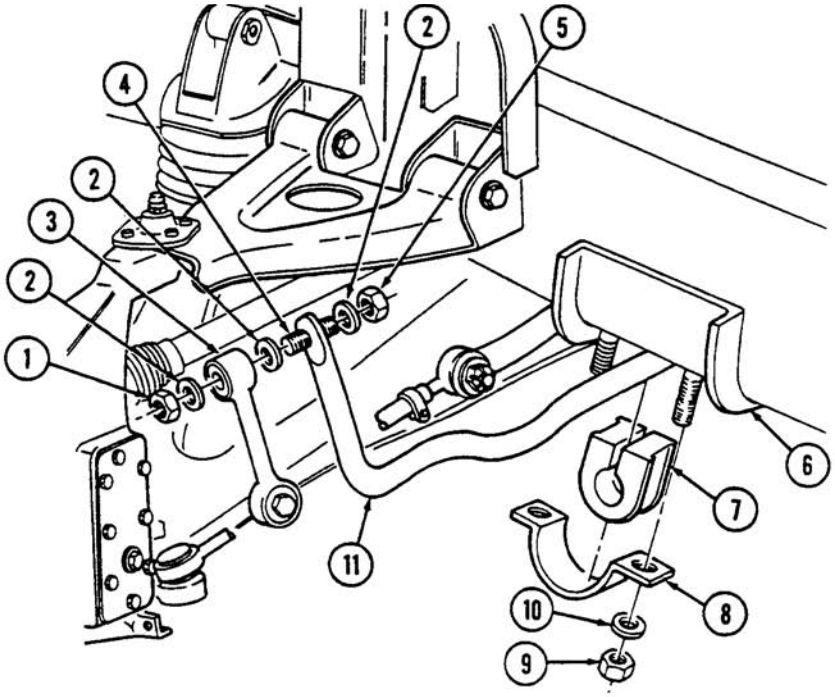

6-21. STABILIZER BAR LINK REPLACEMENT

This task covers:

a. Removal **b. Installation**

INITIAL SETUP:

Tools
General mechanic's tool kit: automotive (Appendix B, Item 1)
Maintenance and repair shop equipment: automotive (Appendix B, Item 2)

Materials/Parts
Locknut (Appendix G, Item 83)
Sealing compound (Appendix C, Item 63)

Manual References
TM 9-2320-387-24P

Maintenance Level
Unit

a. Removal

1. Remove locknut (1) and two washers (2) from bar link (3) and stabilizer bar (4). Discard locknut (1).
2. Remove capscrew (5), two washers (6), and bar link (3) from lower control arm (7).

b. Installation

1. Apply sealing compound to threads of capscrew (5). Install bar link (3) on lower control arm (7) with two washers (6) and capscrew (5). Tighten capscrew (5) to 70 lb-ft (95 N·m).
2. Install bar link (3) on stabilizer bar (4) with two washers (2) and locknut (1). Tighten locknut (1) to 75 lb-ft (102 N·m).

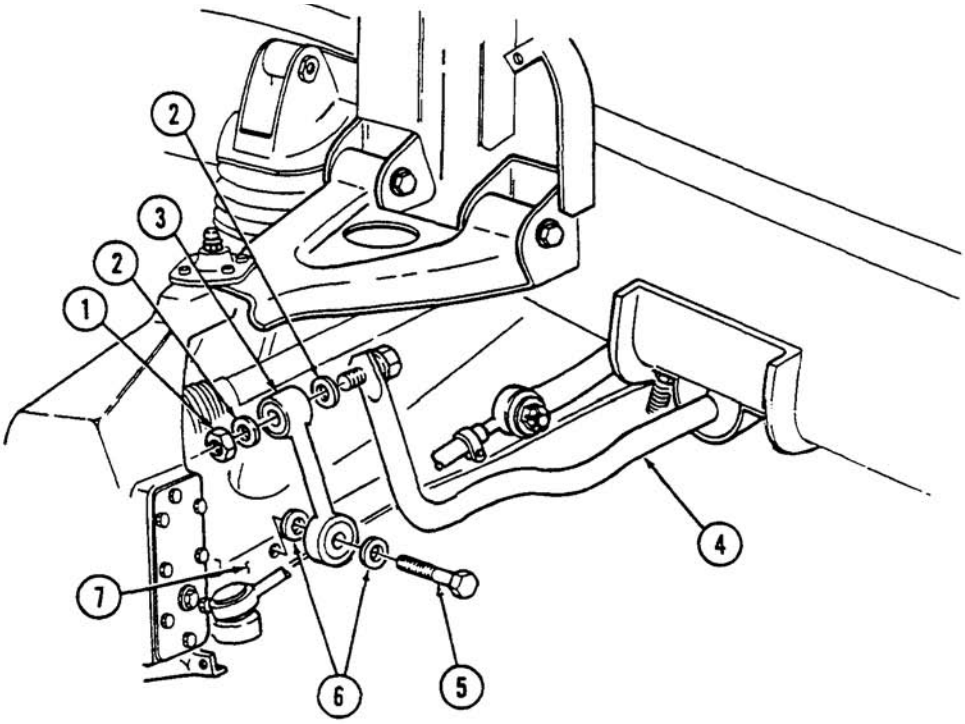

6-22. RADIUS ROD REPLACEMENT

This task covers:

a. Removal **b. Installation**

INITIAL SETUP:

Tools

General mechanic's tool kit:
automotive (Appendix B, Item 1)
Maintenance and repair shop equipment:
automotive (Appendix B, Item 2)

Materials/Parts

Cotter pin (Appendix G, Item 22)
Locknut (Appendix G, Item 88)

Manual References

TM 9-2320-387-10
TM 9-2320-387-24P

Equipment Condition

Wheel removed (para. 8-3).

Maintenance Level

Unit

a. Removal

1. Remove cotter pin (7), slotted nut (6), and washer (5) from radius rod (4) and geared hub (8). Discard cotter pin (7).
2. Remove locknut (9), washer (2), capscrew (1), washer (2), and radius rod (4) from bracket (3) and geared hub (8). Discard locknut (9).

b. Installation

1. Install radius rod (4) on bracket (3) with washer (2), capscrew (1), washer (2), and locknut (9).

CAUTION

Do not loosen slotted nut to install cotter pin. Doing this may result in damage to equipment.

2. Install radius rod (4) on geared hub (8) with washer (5) and slotted nut (6). Tighten slotted nut (6) to 70 lb-ft (95 N·m). Install cotter pin (7).
3. Tighten locknut (9) to 260 lb-ft (353 N·m).

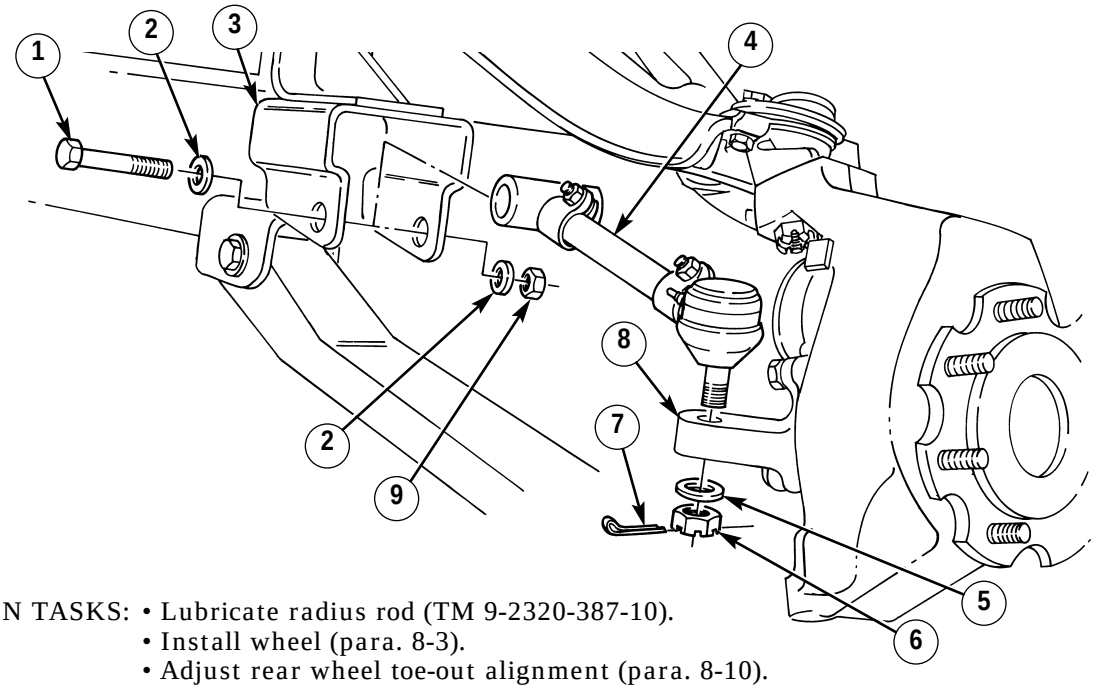

FOLLOW-ON TASKS:
- Lubricate radius rod (TM 9-2320-387-10).
- Install wheel (para. 8-3).
- Adjust rear wheel toe-out alignment (para. 8-10).

6-23. UPPER BALL JOINT MAINTENANCE

This task covers:

a. Inspection
b. Removal
c. Installation

INITIAL SETUP:

Tools

General mechanic's tool kit:
automotive (Appendix B, Item 1)
Maintenance and repair shop equipment:
automotive (Appendix B, Item 2)

Special Tools

Socket adapter (Appendix B, Item 135)
Crowfoot, 15/16 in. (Appendix B, Item 140)

Materials/Parts

Cotter pin (Appendix G, Item 22)
Four locknuts (Appendix G, Item 113)

Personnel Required

One mechanic
One assistant

Manual References

TM 9-2320-387-10
TM 9-2320-387-24P

Maintenance Level

Unit

a. Inspection

1. Chock rear wheels.
2. Raise and support front wheels 2 in. (5.1 cm) off ground.

NOTE

If boot is ripped or torn, upper ball joint is unserviceable.

3. Visually inspect ball joint boot (7), and replace upper ball joint (2) if boot is ripped or torn.
4. Grasp top of tire and attempt to move tire in and out. Observe upper control arm (1) and gear hub (3) where upper ball joint (2) is mounted. If lateral movement is observed, upper ball joint (2) may be worn.
5. Remove wheel (para. 8-3).
6. Remove cotter pin (5) and slotted nut (4) from upper ball joint stud (6). Discard cotter pin (5).
7. Separate upper control arm (1) from geared hub (3) at upper ball joint (2) end and push geared hub (3) to one side.
8. Install slotted nut (4) on threaded end of upper ball joint stud (6) until it bottoms out on taper of upper ball joint (2).
9. Using crowfoot and adapter, tighten slotted nut (4) and observe torque reading. If torque reading is below 20 lb-in. (2.3 N·m), upper ball joint (2) is unserviceable and must be replaced. Remove slotted nut (4), and go to task b.
10. If torque reading is above 20 lb-in. (2.3 N·m), upper ball joint (2) is serviceable. Go to task c.

6-23. UPPER BALL JOINT MAINTENANCE (Cont'd)

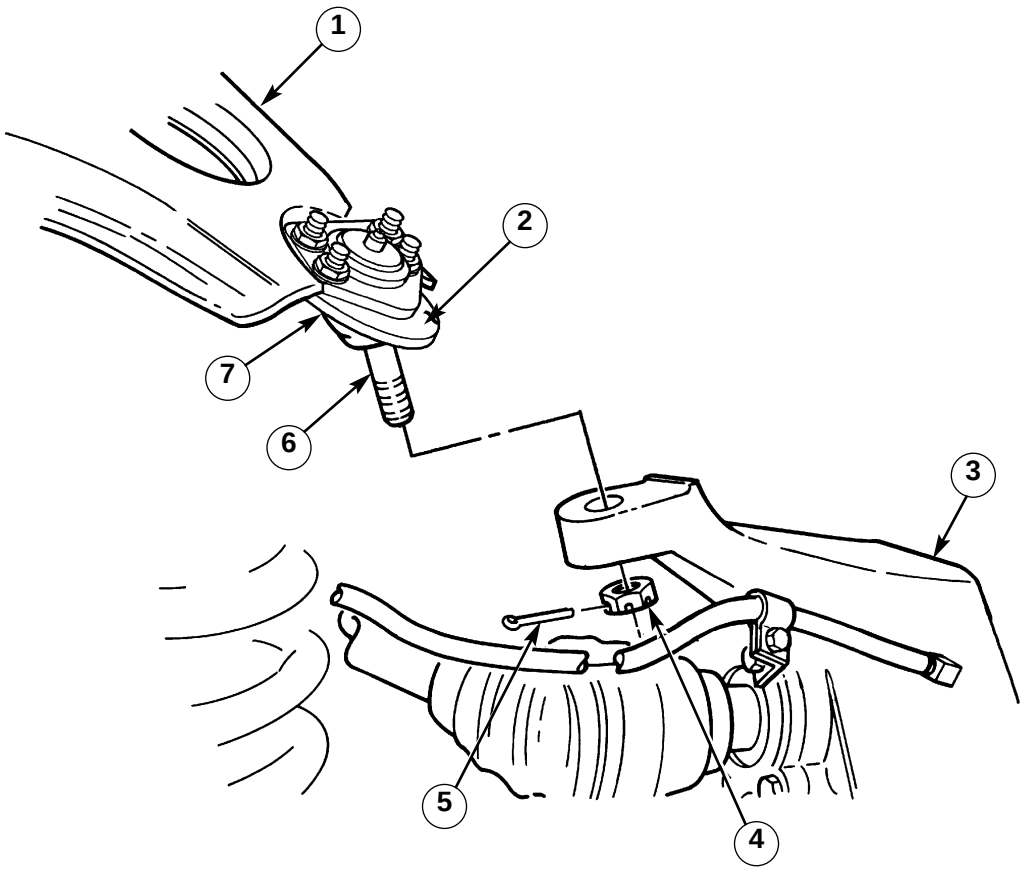

6-23. UPPER BALL JOINT MAINTENANCE (Cont'd)

b. Removal

1. Remove cotter pin (7) and slotted nut (6) from upper ball joint (4) and geared hub (5). Discard cotter pin (7).
2. Remove four locknuts (3), washers (2), capscrews (8), washers (2), upper ball joint (4), and upper control arm (1) from geared hub (5). Discard locknuts (3).

c. Installation

1. Install upper ball joint (4) and upper control arm (1) on geared hub (5) with four washers (2), capscrews (8), washers (2), and locknuts (3). Tighten locknuts (3) to 37 lb-ft (41 N·m).

CAUTION

Do not loosen slotted nut to install cotter pin. Doing this may result in damage to equipment.

2. Install slotted nut (6) on upper ball joint (4). Using crowfoot and adapter, tighten slotted nut (6) to 73 lb-ft (99 N·m). Install cotter pin (7).

6-23. UPPER BALL JOINT MAINTENANCE (Cont'd)

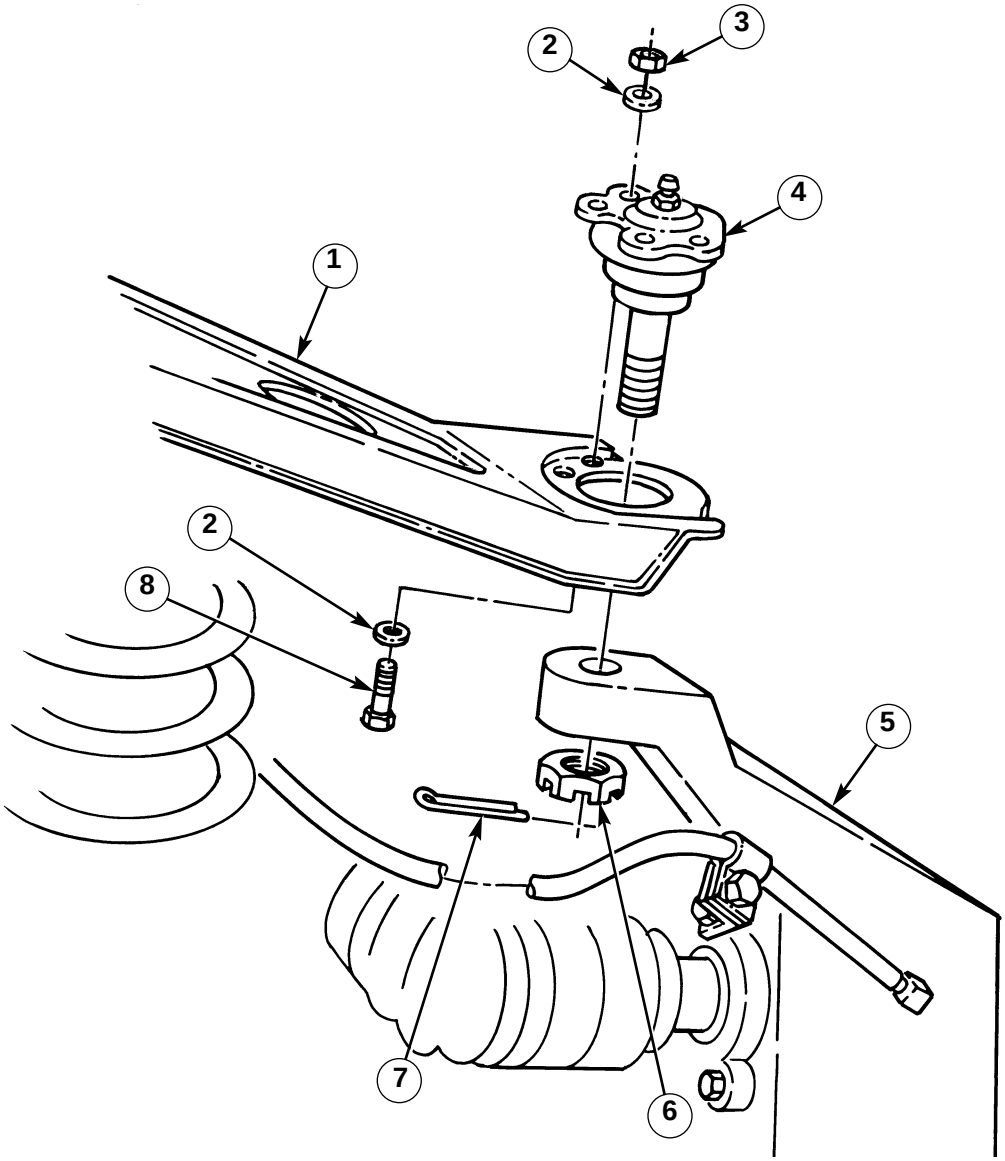

FOLLOW-ON TASKS:
- Lubricate upper ball joint (TM 9-2320-387-10).
- Install wheel (para. 8-3).

6-24. LOWER BALL JOINT MAINTENANCE

This task covers:

a. Inspection
b. Removal
c. Installation

INITIAL SETUP:

Tools
General mechanic's tool kit:
automotive (Appendix B, Item 1)
Maintenance and repair shop equipment:
automotive (Appendix B, Item 2)
Puller, mechanical (Appendix B, Item 157)

Special Tools
Socket adapter (Appendix B, Item 135)
Crowfoot, 15/16 in. (Appendix B, Item 140)

Materials/Parts
Cotter pin (Appendix G, Item 22)
Four locknuts (Appendix G, Item 128)

Personnel Required
One mechanic
One assistant

Manual References
TM 9-2320-387-10
TM 9-2320-387-24P

Maintenance Level
Unit

a. Inspection

1. Chock rear wheels.
2. Raise and support front wheels 2 in. (5.1 cm) off ground.
3. Mark a line across top screw (11) of steering arm cover (10). Mark should be parallel with lower control arm (9).
4. Set a 6-in. (15-cm) ruler upright between lower control arm (9) and marked screw (11).
5. Install prybar between lower control arm (9) and geared hub (5). Push down on prybar and try to move geared hub (5).
6. Measure any movement in geared hub (5). Replace lower ball joint (3) if any movement is more than 3/8 in. (10 mm) or more.

b. Removal

1. Remove wheel (para 8-3).

1.1. Raise and support lower control arm (9).

2. Remove cotter pin (7) and slotted nut (6) from ball joint (3) and geared hub (5). Discard cotter pin (7).

NOTE

Note direction of inner and outer capscrews for installation.

3. Remove four locknuts (2), washers (1), capscrews (8), and washers (1) from ball joint (3) and control arm (9). Discard locknuts (2).
4. Using puller, remove ball joint (3) with boot retainer (4) from geared hub (5).

c. Installation

NOTE

Ensure outer capscrews are installed from top down and inner capscrews are installed from bottom up.

1. Install ball joint (3) with boot retainer (4) on control arm (9), ensuring ball joint (3) is placed below control arm (9), with four washers (1), capscrews (8), washers (1), and locknuts (2). Tighten locknuts (2) to 60 lb-ft (81 N·m).

6-24. LOWER BALL JOINT MAINTENANCE (Cont'd)

CAUTION

Do not loosen slotted nut to install cotter pin. Doing this may result in damage to equipment.

2. Install ball joint (3) on geared hub (5) with slotted nut (6). Tighten slotted nut (6) to 73 lb-ft (99 N·m). Install cotter pin (7) in slotted nut (6).

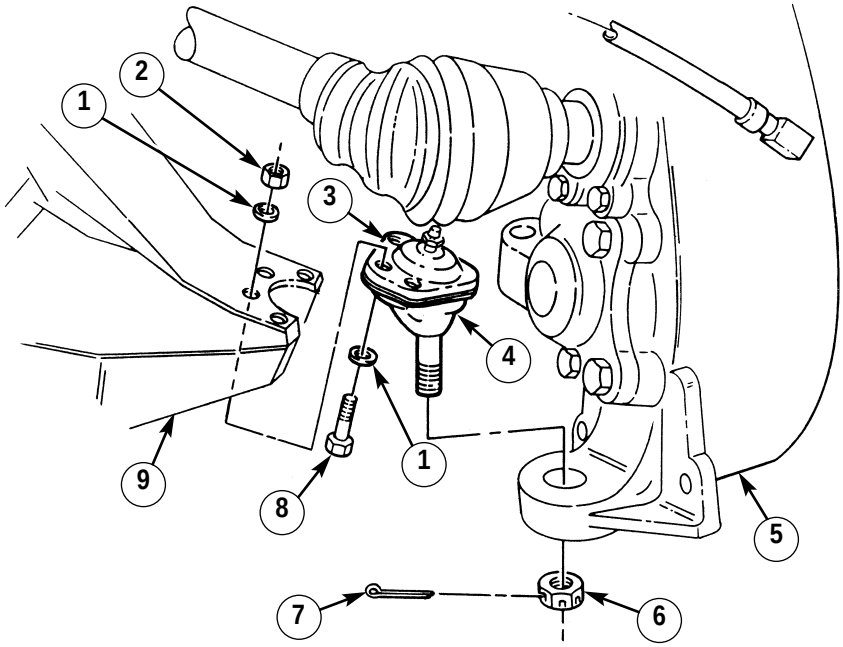

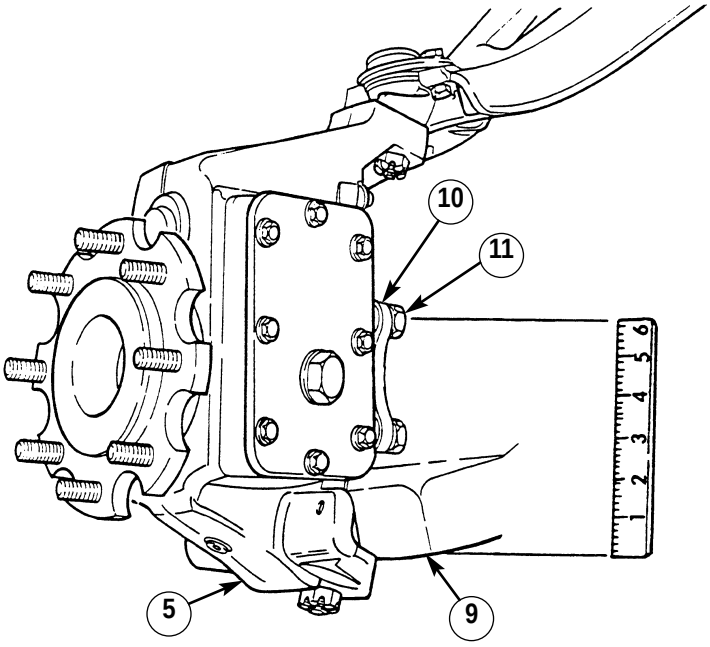

FOLLOW-ON TASKS:
- Lubricate lower ball joint (TM 9-2320-387-10).
- Install wheel (para. 8-3).

6-25. UPPER CONTROL ARM REPLACEMENT

This task covers:

a. Removal **b. Installation**

INITIAL SETUP

Tools

General mechanic's tool kit:
automotive (Appendix B, Item 1)
Maintenance and repair shop equipment:
automotive (Appendix B, Item 2)
Puller, mechanical (Appendix B, Item 157)

Materials/Parts

Four locknuts (Appendix G, Item 113)
Cotter pin (Appendix G, Item 22)
Lockwasher (Appendix G, Item 169)
Two locknuts (Appendix G, Item 88)
Sealing compound (Appendix C, Item 59)

Manual References

TM 9-2320-387-10
TM 9-2320-387-24P

Equipment Condition

- Wheel removed (para. 8-3).
- Hood raised and secured (TM 9-2320-387-10) (front upper control arm only).

Maintenance Level

Unit

NOTE

The replacement procedure for front and rear upper control arms is basically the same. This procedure covers the left front upper control arm.

a. Removal

1. Remove capscrew (1), washer (2), and vent line bracket (3) from geared hub (4).
2. Loosen clamp (6) and disconnect vent line (5) from fitting (7).
3. Remove capscrew (21), clamp (20), and vent line (5) from upper control arm (15).
4. Remove nut (25), clamp (24), capscrew (23), washer (22), and vent line (5) from upper control arm (15).
5. Remove cotter pin (31), slotted nut (32), and washer (33) from tie rod end (30). Discard cotter pin (31).
6. Using puller, disconnect tie rod end (30) from geared hub (4).
7. Remove access plug (8), washer (9), halfshaft retaining capscrew (10), and lockwasher (11) from halfshaft (29) and geared hub (4). Discard lockwasher (11).
8. Remove four locknuts (14), washers (12), capscrews (26), and washers (12) from upper ball joint (13) and upper control arm (15). Discard locknuts (14).
9. Remove cotter pin (27), slottled nut (28), and upper ball joint (13) from control arm (15) and geared hub (4). Discard cotter pin (27).
10. Remove two locknuts (16), washers (17), capscrews (19), washers (17), and upper control arm (15) from two brackets (18). Discard locknuts (16).

b. Installation

NOTE

On front control arms, capscrew head is toward rear of vehicle. On rear control arms, capscrew head is toward front of vehicle.

1. Install upper control arm (15) on two brackets (18) with two washers (17), capscrews (19), washers (17), and locknuts (16).
2. Install upper ball joint (13) on upper control arm (15) with four washers (12), capscrews (26), washers (12), and locknuts (14).
3. Install upper ball joint (13) on upper control arm (15) and geared hub (4) with slotted nut (28).
4. Tighten slotted nut (28) on upper ball joint (13) to 65 lb-ft (88 N·m). Install cotter pin (27).

6-25. UPPER CONTROL ARM REPLACEMENT (Cont'd)

5. Tighten locknuts (16) to 260 lb-ft (353 N·m).
6. Apply sealing compound to halfshaft retaining capscrew (10) and install halfshaft (29) on geared hub (4) with lockwasher (11) and halfshaft retaining capscrew (10). Tighten capscrew (10) to 37 lb-ft (50 N·m).
7. Install washer (9) and access plug (8) on geared hub (4). Tighten access plug (8) to 8-13 lb-ft (11-18 N·m).

CAUTION

Do not loosen slotted nut to install cotter pin. Doing this may result in damage to equipment.

8. Install tie rod end (30) on geared hub (4) with washer (33) and slotted nut (32). Tighten slotted nut (32) to 70 lb-ft (95 N·m) and install cotter pin (31).
9. Connect vent line (5) to fitting (7) and tighten clamp (6).

NOTE

If installing vent line bracket on left front geared hub, bend bracket 30° (from standard 90° angle to 120°) before installation.

10. Install vent line bracket (3) on geared hub (4) with washer (2) and capscrew (1). Tighten capscrew (1) to 38 lb-ft (52 N·m).
11. Install clamp (20) and vent line (5) on upper control arm (15) with capscrew (21).
12. Install clamp (24) and vent line (5) on upper control arm (15) with washer (22), capscrew (23), and nut (25).

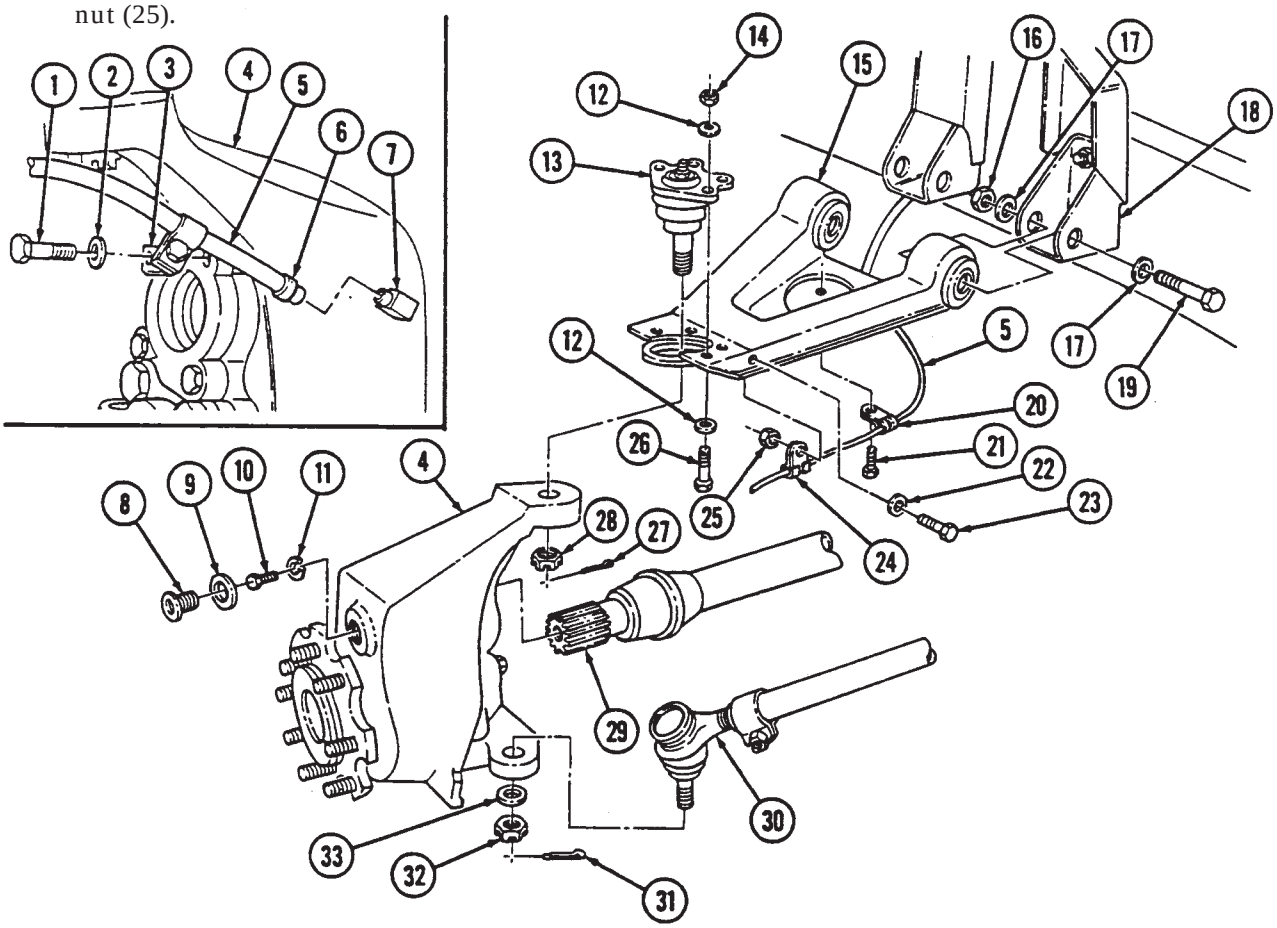

FOLLOW-ON TASKS:
- Install wheel (para. 8-3).
- Lower and secure hood (TM 9-2320-387-10) (front upper control arm only).

6-26. LOWER CONTROL ARM REPLACEMENT

This task covers:

a. Removal **b. Installation**

INITIAL SETUP:

Tools

General mechanic's tool kit:
automotive (Appendix B, Item 1)
Maintenance and repair shop equipment:
automotive (Appendix B, Item 2)

Materials/Parts

Four locknuts (Appendix G, Item 128)
Two locknuts (Appendix G, Item 88)
Sealing compound (Appendix C, Item 63)

Personnel Required

One mechanic
One assistant

Manual References

TM 9-2320-387-24P

Equipment Condition

- Wheel removed (para. 8-3).
- Shock absorber removed (para. 6-28).

General Safety Instructions

Lower control arm must be supported during removal and installation.

Maintenance Level

Unit

WARNING

Lower control arm must be supported during removal and installation. Failure to support lower control arm may cause injury to personnel or damage to equipment.

NOTE

The replacement procedure for front and rear lower control arms is basically the same. This procedure covers the left front lower control arm.

a. Removal

NOTE

Note direction of inner and outer capscrews for installation.

1. Remove four locknuts (10), washers (9), capscrews (8), and washers (7) from lower ball joint (6), geared hub (5), and lower control arm (11). Discard locknuts (10).
2. Remove capscrew (15), two washers (13), and bar link (14) from lower control arm (11).
3. Raise and support lower control arm (11) and pull geared hub (5) away.
4. Lower control arm (11) and remove coil spring (4).
5. Remove two locknuts (3), washers (2), capscrews (1), washers (2), and lower control arm (11) from two brackets (12). Discard locknuts (3).

b. Installation

NOTE

On lower control arms, capscrew heads are toward front of vehicle.

1. Install lower control arm (11) on two brackets (12) with two washers (2), capscrews (1), washers (2), and locknuts (3).
2. Install coil spring (4) on lower control arm (11), ensuring end of coil spring (4) fits in spring pocket of lower control arm (11).

6-26. LOWER CONTROL ARM REPLACEMENT (Cont'd)

WARNING

Lower control arm must be supported during removal and installation. Failure to support lower control arm may cause injury to personnel or damage to equipment.

3. Raise lower control arm (11) to align with geared hub (5) and lower ball joint (6), ensuring ball joint (6) is placed below lower control arm (11).

NOTE

Ensure outer capscrews are installed from top down and inner capscrews are installed from bottom up.

4. Install geared hub (5) and ball joint (6) on lower control arm (11) with four washers (7), capscrews (8), washers (9), and locknuts (10). Tighten locknuts (10) to 60 lb-ft (81 N·m).
5. Tighten two locknuts (3) to 260 lb-ft (353 N·m).
6. Install wheel (para. 8-3).
7. Apply sealing compound to threads of capscrew (15). Install bar link (14) on lower control arm (11) with two washers (13) and capscrew (15). Tighten capscrew (15) to 70 lb-ft (95 N·m).

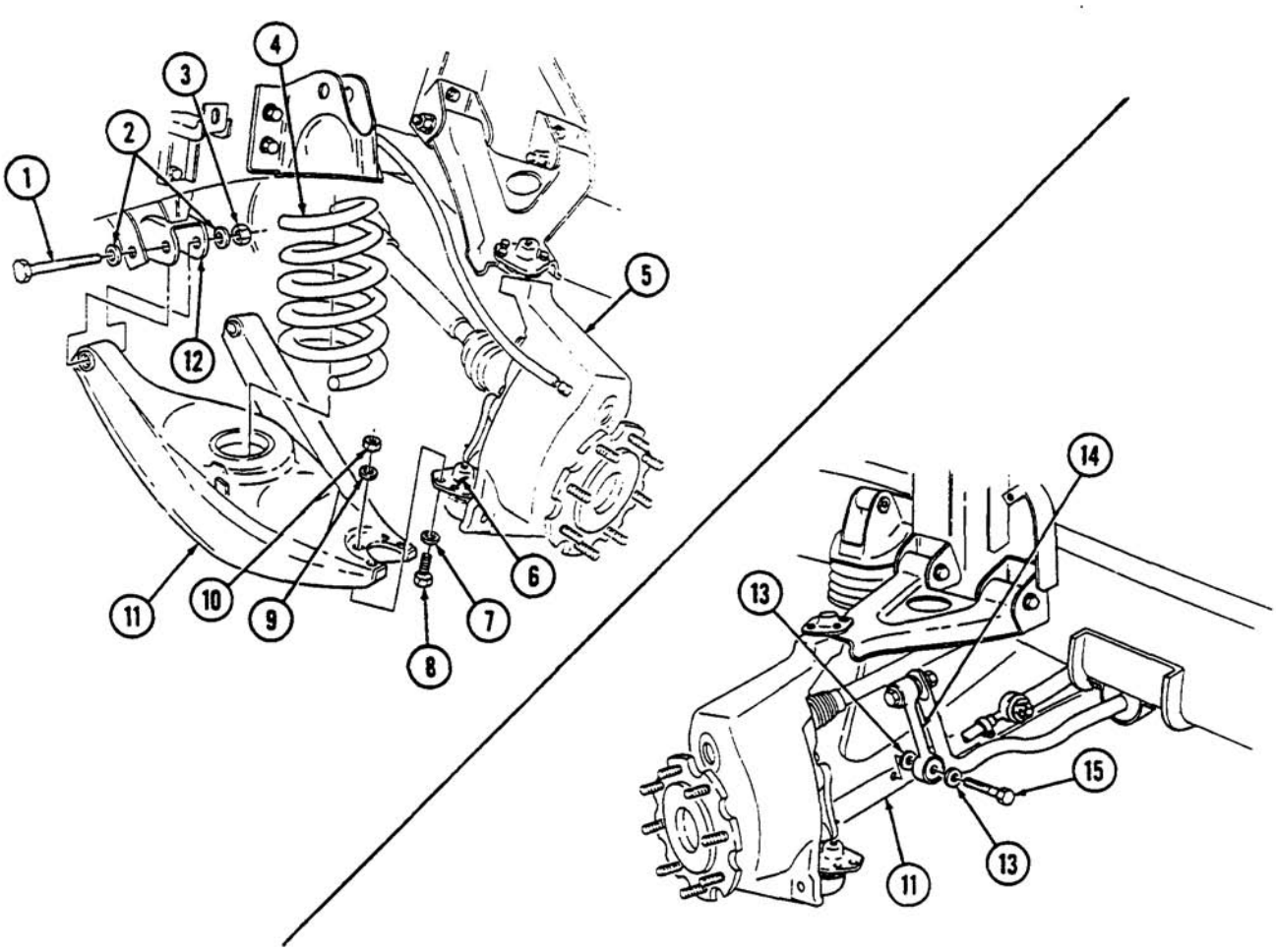

FOLLOW-ON TASK: Install shock absorber (para. 6-28).

6-27. COIL SPRING REPLACEMENT

This task covers:

a. Removal **b. Installation**

INITIAL SETUP:

Tools

General mechanic's tool kit:
automotive (Appendix B, Item 1)

Materials/Parts

Locknut (Appendix G, Item 78)
Four locknuts (Appendix G, Item 128)
Sealing compound (Appendix C, Item 63)

Manual References

TM 9-2320-387-10
TM 9-2320-387-24P

Equipment Condition

- Hood raised and secured (front springs only) (TM 9-2320-387-10).
- Shelter removed (M1113 only) (rear springs only) (para. 11-78).

General Safety Instructions

Lower control arm must be supported during removal and installation.

Maintenance Level

Unit

NOTE

The replacement procedure for all four coil springs is basically the same. This procedure covers the left front coil spring.

a. Removal

1. Remove capscrew (13), two washers (14), and stabilizer bar link (15) from lower control arm (12).
2. Remove wheel (para. 8-3).

NOTE

Note direction of inner and outer capscrews for installation.

3. Remove four locknuts (10), washers (8), capscrews (9), and washers (8) from lower ball joint (7), geared hub (6), and lower control arm (12). Discard locknuts (10).

WARNING

Lower control arm must be supported during removal and installation. Failure to support lower control arm may cause injury to personnel or damage to equipment.

4. Place jack under lower control arm (12) and raise lower control arm (12) slightly to relieve tension on shock retaining pin (2).

NOTE

For rear coil spring replacement, it may be necessary to spread frame from body by positioning prybar between hinge mount bracket and rear bumper to gain access to shock absorber retaining pin nut.

5. Remove locknut (5), retaining pin (2), washer (3), and shock absorber (11) from spring seat (4) and collapse shock absorber (11). Discard locknut (5).

NOTE

It may be necessary to loosen lower control arm capscrews to allow lower control arm to be lowered.

6. Pull geared hub (6) and ball joint (7) away from lower control arm (12), lower the control arm (12), and remove coil spring (1) from lower control arm (12) and shock absorber (11).

6-27. COIL SPRING REPLACEMENT (Cont'd)

b. Installation

1. Install coil spring (1) over shock absorber (11) and onto lower control arm (12), ensuring end of coil spring (1) fits in spring pocket of lower control arm (12).
2. Ensure coil spring (1) is aligned with flange of spring seat (4) and raise lower control arm (12).
3. Extend shock absorber (11) into spring seat (4) and install washer (3), retaining pin (2), and locknut (5). Tighten locknut (5) to 300 lb-ft (407 N·m).

NOTE

Ensure outer capscrews are installed from top down and inner capscrews are installed from bottom up.

4. Install lower ball joint (7) and geared hub (6) on lower control arm (12), ensuring lower ball joint (7) is placed below lower control arm (12). Secure with four washers (8), capscrews (9), washers (8), and locknuts (10). Tighten locknuts (10) to 60 lb-ft (81 N·m).
5. Install wheel (para. 8-3).
6. Apply sealing compound to threads of capscrew (13). Install stabilizer bar link (15) to lower control arm (12) with two washers (14) and capscrew (13). Tighten capscrew (13) to 70 lb-ft (95 N·m).

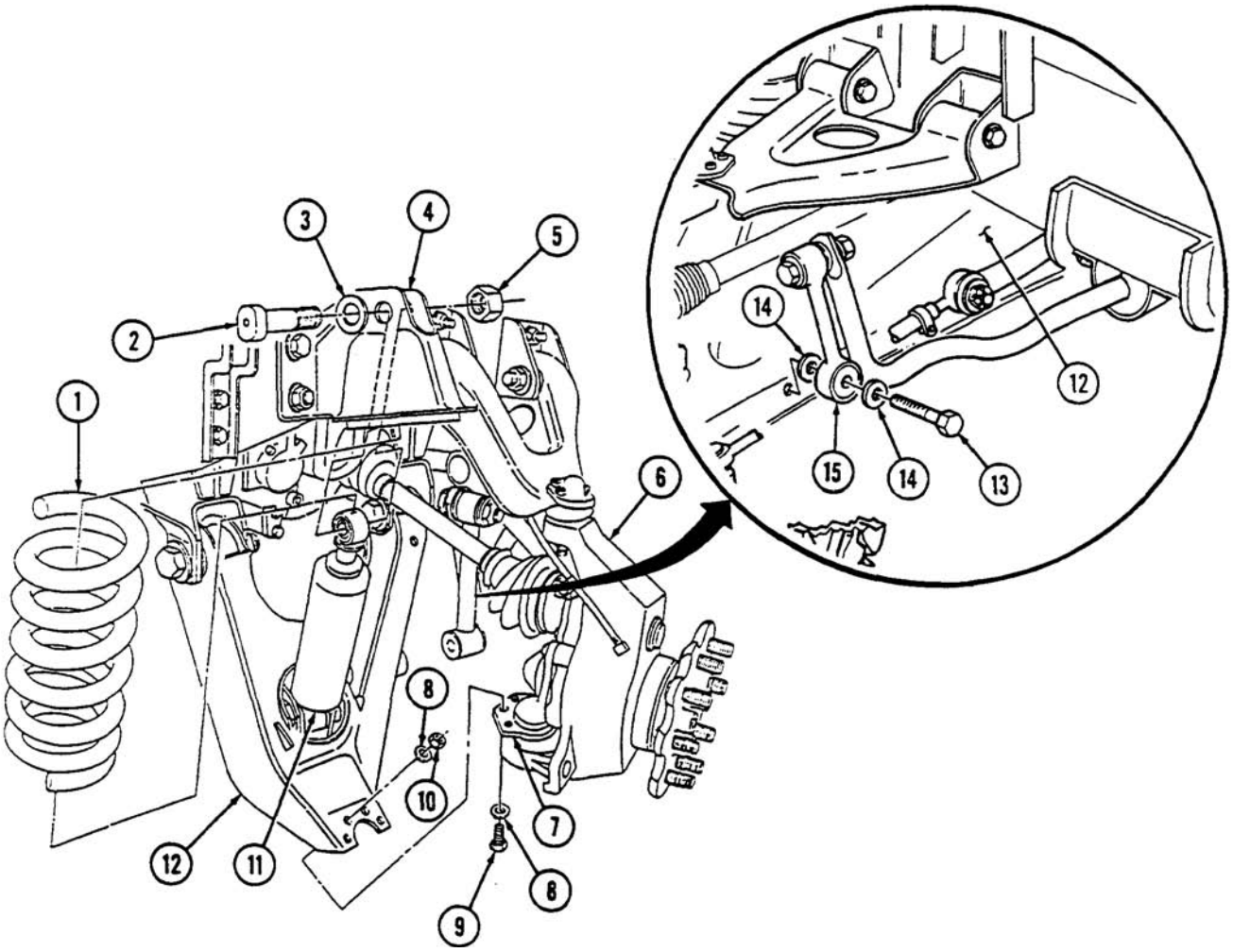

FOLLOW-ON TASKS: • Lower and secure hood (front springs only) (TM 9-2320-387-10).
• Install shelter (M1113 only) (rear springs only) (para. 11-78).

6-28. SHOCK ABSORBER REPLACEMENT

This task covers:

a. Removal **b. Installation**

INITIAL SETUP:

Tools

General mechanic's tool kit:
automotive (Appendix B, Item 1)
Maintenance and repair shop equipment:
automotive (Appendix B, Item 2)
Drive socket, 3/4 in. (Appendix B, Item 158)

Materials/Parts

Two locknuts (Appendix G, Item 85)
Two lockwashers (Appendix G, Item 171)
Two locknuts (Appendix G, Item 73)
Cotter pin (Appendix G, Item 24)

Personnel Required

One mechanic
One assistant

Manual References

TM 9-2320-387-10
TM 9-2320-387-24P

Equipment Condition

- Hood raised and secured (front shock absorbers only) (TM 9-2320-387-10).
- Shelter removed (M1113 only) (rear shock absorbers only) (para. 11-78).

Maintenance Level

Unit

NOTE

The replacement procedure for all shock absorbers is the same except rear lower shock pins must be installed with head of pin facing rearward. This procedure covers the left rear shock absorber.

a. Removal

NOTE

For rear shock absorber replacement on M1113 models, it may be necessary to spread frame from body by positioning prybar between hinge mount bracket and rear bumper to gain access to shock absorber retaining pin nut. Perform steps 1 and 2 only if required.

1. Remove cotter pin (9), slotted nut (8), washer (7), and shackle (4) from body mount bracket (3) and rear bumper (6). Discard cotter pin (9).
2. Remove two locknuts (1), washers (2), capscrews (5), washers (2), and body mount bracket (3) from rear bumper (6). Discard locknuts (1).

6-28. SHOCK ABSORBER REPLACEMENT (Cont'd)

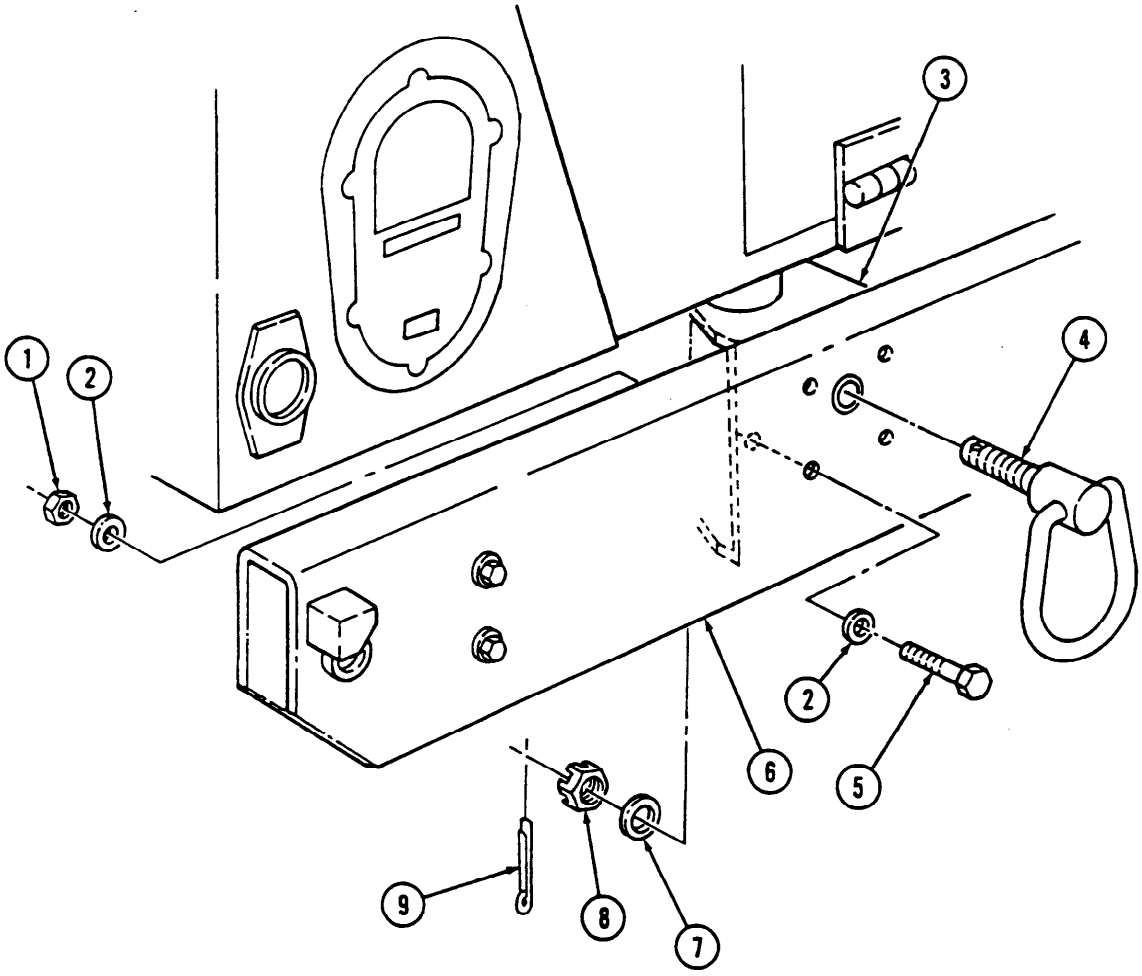

6-28. SHOCK ABSORBER REPLACEMENT (Cont'd)

3. Remove two capscrews (10), lockwashers (9), and washers (8) from bracket (11) and lower control arm (6). Discard lockwashers (9).

NOTE

Note position of pin for installation.

4. Remove locknut (5), pin (2), and washer (3) from shock absorber (1) and spring seat (4). Discard locknut (5).
5. Compress shock absorber (1) and remove shock absorber (1) and bracket (11).

NOTE

Note alignment of shock absorber and bracket for installation.

6. Position shock absorber (1) in vise, and remove locknut (7), pin (13), washer (12), and bracket (11) from shock absorber (1). Discard locknut (7).

b. Installation

NOTE

- It may be necessary to spread spring seat to allow installation of shock absorber.
- Shock absorbers are marked FRONT or REAR to aid identification.

1. Position shock absorber (1) in vise, and install bracket (11) on shock absorber (1) with washer (12), pin (13), and locknut (7). Tighten locknut (7) to 300 lb-ft (407 N•m).

CAUTION

Do not pry or use sharp tools on shock absorber position rod. A damaged rod will cause shock failure.

2. Install shock absorber (1) and bracket (11) through lower control arm (6).
3. Extend shock absorber (1) and install piston rod end of shock absorber (1) on spring seat (4) with washer (3), pin (2), and locknut (5). Tighten locknut (5) to 300 lb-ft (407 N•m).
4. Install bracket (11) on lower control arm (6) with two washers (8), lockwashers (9), and capscrews (10). Tighten capscrews (10) to 178 lb-ft (241 N•m).

6-28. SHOCK ABSORBER REPLACEMENT (Cont'd)

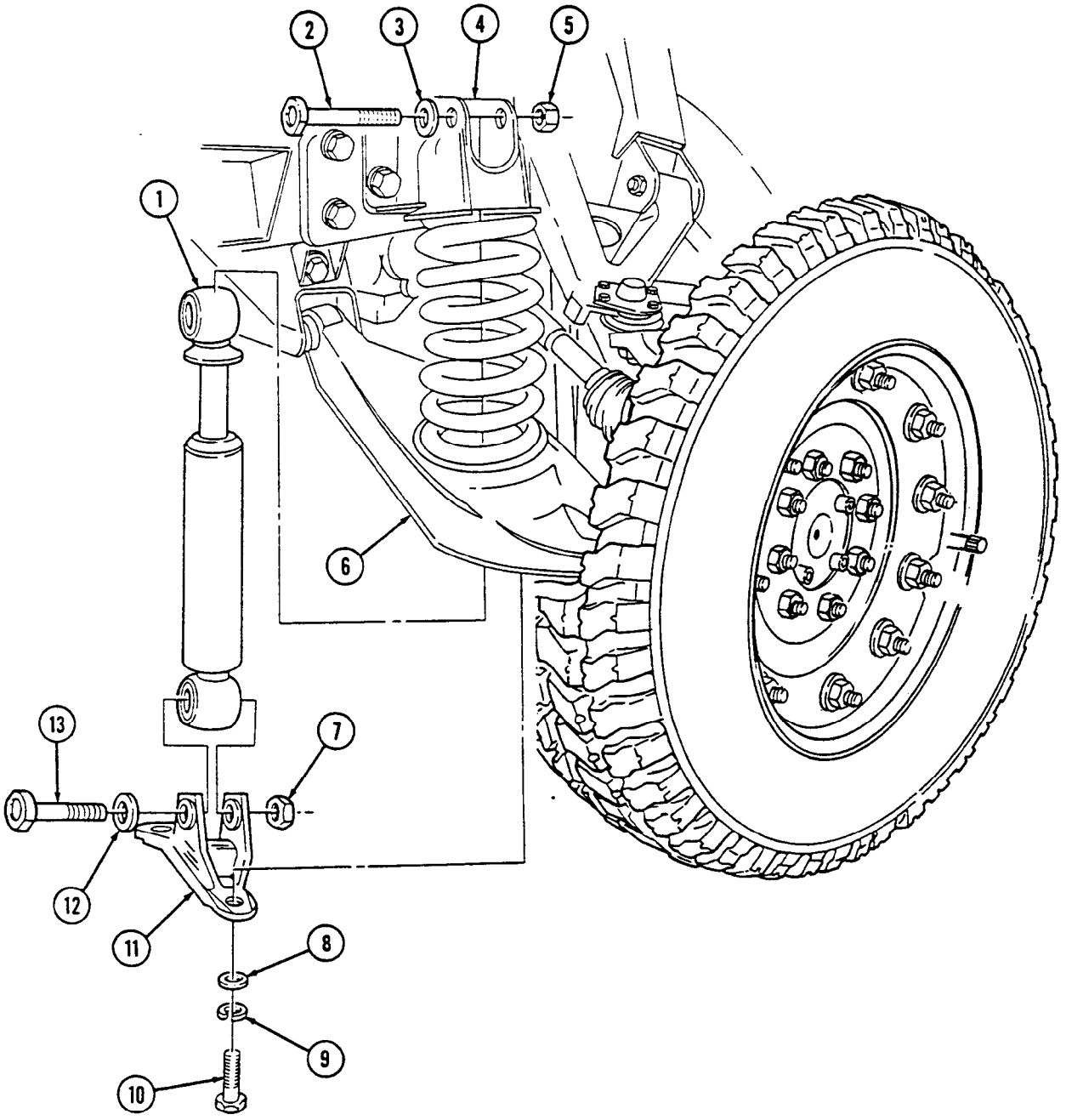

6-28. SHOCK ABSORBER REPLACEMENT (Cont'd)

NOTE

Perform steps 5 through 8 if necessary to reassemble body mount bracket to frame and rear bumper.

5. Install shackle (4) and body mount bracket (3) on rear bumper (6) with washer (7) and slotted nut (8).
6. Tighten slotted nut (8) and install cotter pin (9).
7. Secure body mount bracket (3) to rear bumper (6) with two washers (2), capscrews (5), washers (2), and locknuts (1).
8. Tighten locknuts (1) to 90 lb-ft (122 N•m).

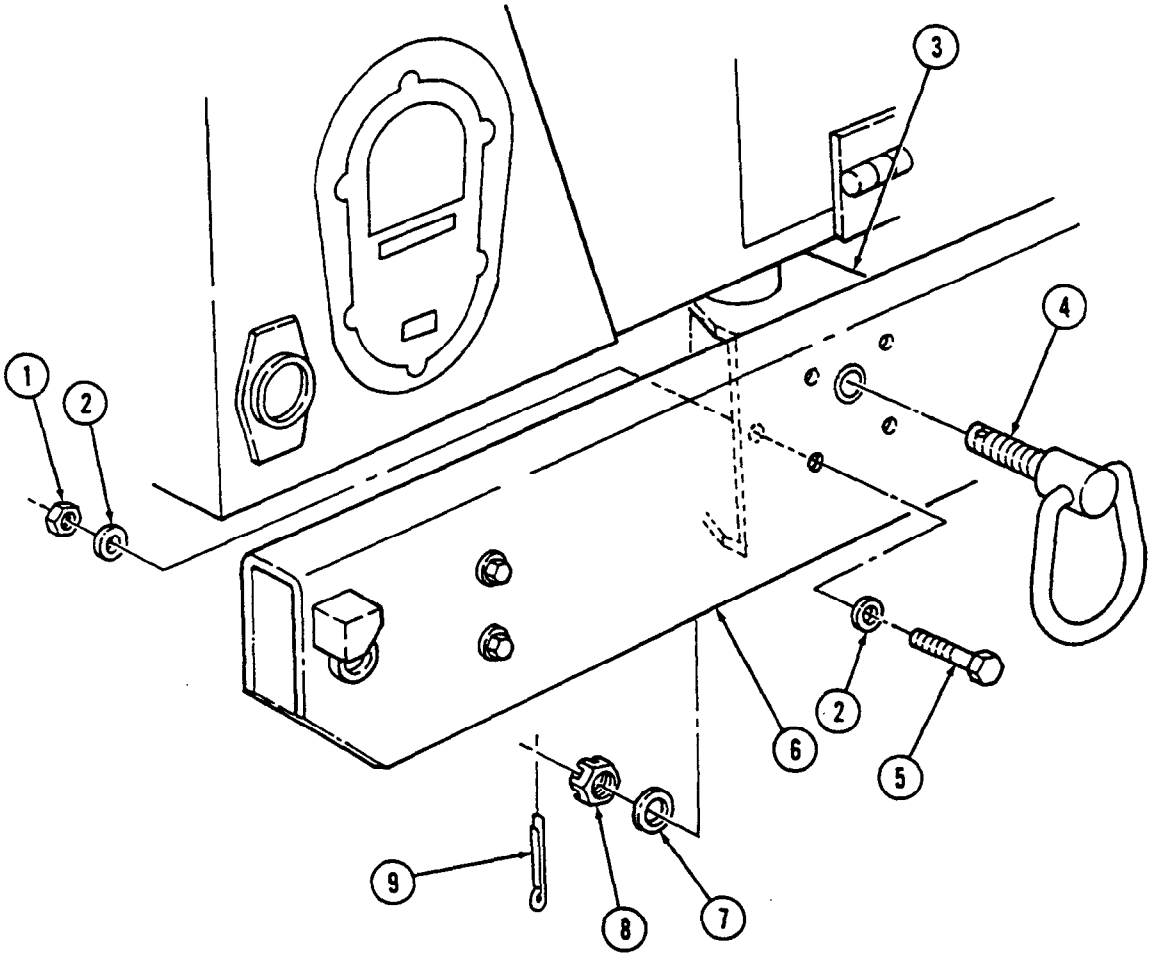

FOLLOW-ON TASKS:
- Lower and secure hood (front shock absorbers only) (TM 9-2320-387-10).
- Install shelter (M1113 only) (rear shock absorbers only) (para. 11-78).

CHAPTER 7
BRAKE SYSTEM (UNIT) MAINTENANCE

Section I. SERVICE BRAKE SYSTEM MAINTENANCE

7-1. SERVICE BRAKE SYSTEM MAINTENANCE TASK SUMMARY

TASK PARA.	PROCEDURES	PAGE NO.
7-2.	Service Brake System Bleeding Instructions	7-2
7-3.	Service Brake Pad Maintenance	7-6
7-4.	Service Brake Caliper Maintenance	7-10
7-5.	Master Cylinder Maintenance	7-14
7-6.	Hydro-Booster Replacement	7-16
7-7.	Brake Lines Replacement	7-18
7-8.	Brake Pressure Limiter Valve Replacement	7-28
7-9.	Service Brake Pedal Replacement	7-30
7-10.	Proportioning Valve and Differential Valve Replacement	7-32
7-11.	Brake Protection Guards Replacement	7-34
7-12.	Service Brake Rotor Replacement	7-36

7-2. SERVICE BRAKE SYSTEM BLEEDING INSTRUCTIONS

This task covers:

a. Pressure Bleeding
b. Manual Bleeding
c. Master Cylinder Bleeding

INITIAL SETUP:

Tools
General mechanic's tool kit: automotive (Appendix B, Item 1)

Materials/Parts
Brake fluid (Appendix C, Item 18)

Personnel Required
One mechanic
One assistant (task b. only)

Manual References
TM 9-2320-387-10
TM 9-2320-387-24P

Equipment Condition
- Hood raised and secured (TM 9-2320-387-10).
- Master cylinder filled to proper level (para. 2-12, item 11).

General Safety Instructions
Always wear eye protection when bleeding brakes.

Maintenance Level
Unit

WARNING

Always wear eye protection when bleeding brakes. Failure to do this may cause injury if brake fluid comes in contact with eyes.

NOTE

- If only the front or rear half of the system has been serviced, it is usually necessary to bleed only that half of the system. However, if a firm brake pedal cannot be obtained after bleeding, it will be necessary to bleed the entire system. The brake hydraulic system can be bled manually or by using a pressure tank and adapters. Each method is outlined in the following procedures.
- Bleed brakes in the following order: right rear, left rear, right front, left front.

a. Pressure Bleeding

CAUTION

- When using a pressure bleeding tank, follow the manufacturer's instructions for its use. Do not exceed the recommended working pressure when pressurizing the tank. A tank pressure of 15-20 psi (103-138 kPa) is sufficient to bleed the brake hydraulic system. Release all air pressure from the tank after using it.
- After refilling pressure bleeding tank with silicone brake fluid, let tank sit undisturbed for 30 minutes minimum to ensure all visible as well as minute air bubbles are gone.

NOTE

This procedure covers bleeding at one wheel. Repeat bleeding task for remaining wheels.

1. Remove cover from master cylinder (1).
2. Install pressure tank bleeder adapter (2) on master cylinder (1).
3. Connect line (3) from pressure tank to adapter (2).
4. Remove protective cap (5) from bleeder screw (6) on caliper assembly (7).
5. Connect short piece of hose (8) to bleeder screw (6) and place other end of hose (8) in container 3/4-full of brake fluid.

7-2. SERVICE BRAKE SYSTEM BLEEDING INSTRUCTIONS (Cont'd)

6. Open valve (4) on line (3) from pressure tank to master cylinder (1), allowing pressurized brake fluid to enter system.
7. Open bleeder screw (6) 3/4-turn and observe brake fluid in container. Close bleeder screw (6) when brake fluid flows free of air bubbles.
8. Disconnect hose (8) from bleeder screw (6) and install protective cap (5) on bleeder screw (6).
9. Close valve (4) on line (3) from pressure tank to master cylinder (1).
10. Disconnect line (3) from adapter (2).
11. Remove adapter (2) from master cylinder (1).
12. Fill reservoirs with silicone brake fluid and install cover on master cylinder (1).

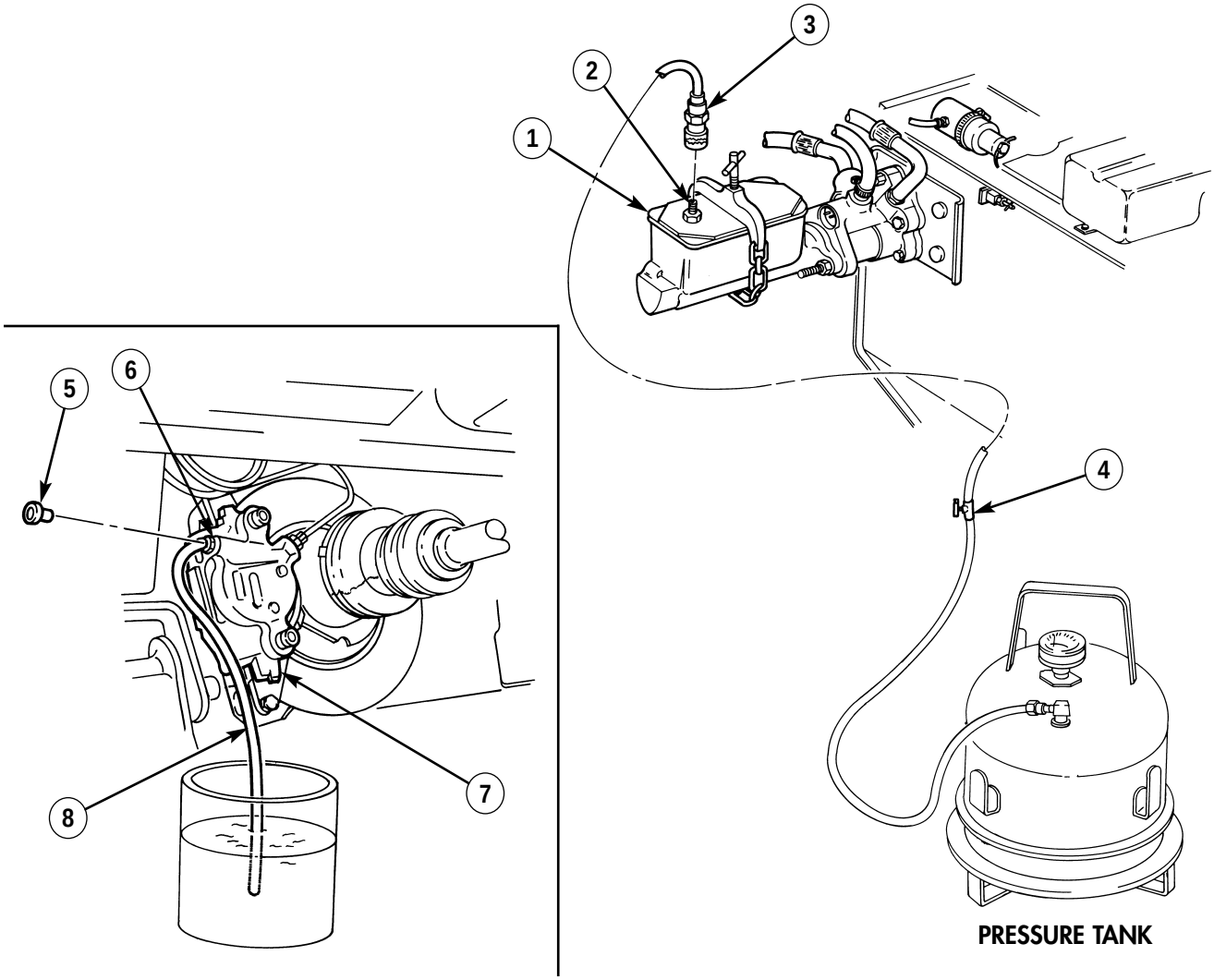

7-2. SERVICE BRAKE SYSTEM BLEEDING INSTRUCTIONS (Cont'd)

b. Manual Bleeding

NOTE

- This procedure covers bleeding at one wheel. Repeat bleeding task for remaining wheels.
- Assistant is required to depress the brake pedal when manually bleeding brakes while mechanic opens and closes bleeder screw.

1. Remove cover (5) from master cylinder (10) and fill reservoirs (6) with silicone brake fluid.

1.1 Remove protective cap (1) from bleeder screw (2) on caliper assembly (3).

2. Connect short piece of hose (4) to bleeder screw (2) and place other end of hose (4) in container 3/4-full of brake fluid.

CAUTION

- Check the master cylinder fluid level frequently during the bleeding operation and refill the reservoirs as necessary. Do not allow the master cylinder to run out of fluid at any time or additional air will be drawn into the system.
- After adding silicone brake fluid to master cylinder, let cylinder sit undisturbed for 30 minutes minimum to ensure all visible as well as minute air bubbles are gone.

3. Have assistant pump brake pedal toward floor and hold it there. Open bleeder screw (2) 3/4-turn.
4. When pedal reaches floor, tighten bleeder screw (2) and have assistant slowly release brake pedal.
5. Repeat steps 3 and 4 until fluid flows clear and free of air bubbles.
6. Disconnect hose (4) from bleeder screw (2) and install protective cap (1) on bleeder screw (2).
7. Refill reservoirs (6) with silicone brake fluid and install cover (5) on master cylinder (10).

c. Master Cylinder Bleeding

NOTE

Perform this procedure prior to installing master cylinder on vehicle.

1. Secure master cylinder flange (9) in vise.
2. Remove cover (5) and fill reservoirs (6) with silicone brake fluid.
3. Install threaded end of one bleeder hose (7) into brake line port on master cylinder (10) and insert opposite end into reservoir (6). Repeat step for other bleeder hose (7).
4. Slowly push piston (8) into master cylinder (10). Do not release piston (8). While holding piston (8), pinch bleeder hoses (7) off and release piston (8). Piston (8) will return automatically.

CAUTION

Whenever the master cylinder is filled with silicone brake fluid, let cylinder sit undisturbed for 30 minutes minimum to ensure all visible as well as minute air bubbles are gone.

5. Refill reservoirs (6) with silicone brake fluid and repeat steps 3 and 4 until no air bubbles remain in brake fluid.
6. Remove two bleeder hoses (7) from brake line ports on master cylinder (10).
7. Install cover (5) on master cylinder (10) and remove from vise.
8. Install master cylinder (para. 7-5).

7-2. SERVICE BRAKE SYSTEM BLEEDING INSTRUCTIONS (Cont'd)

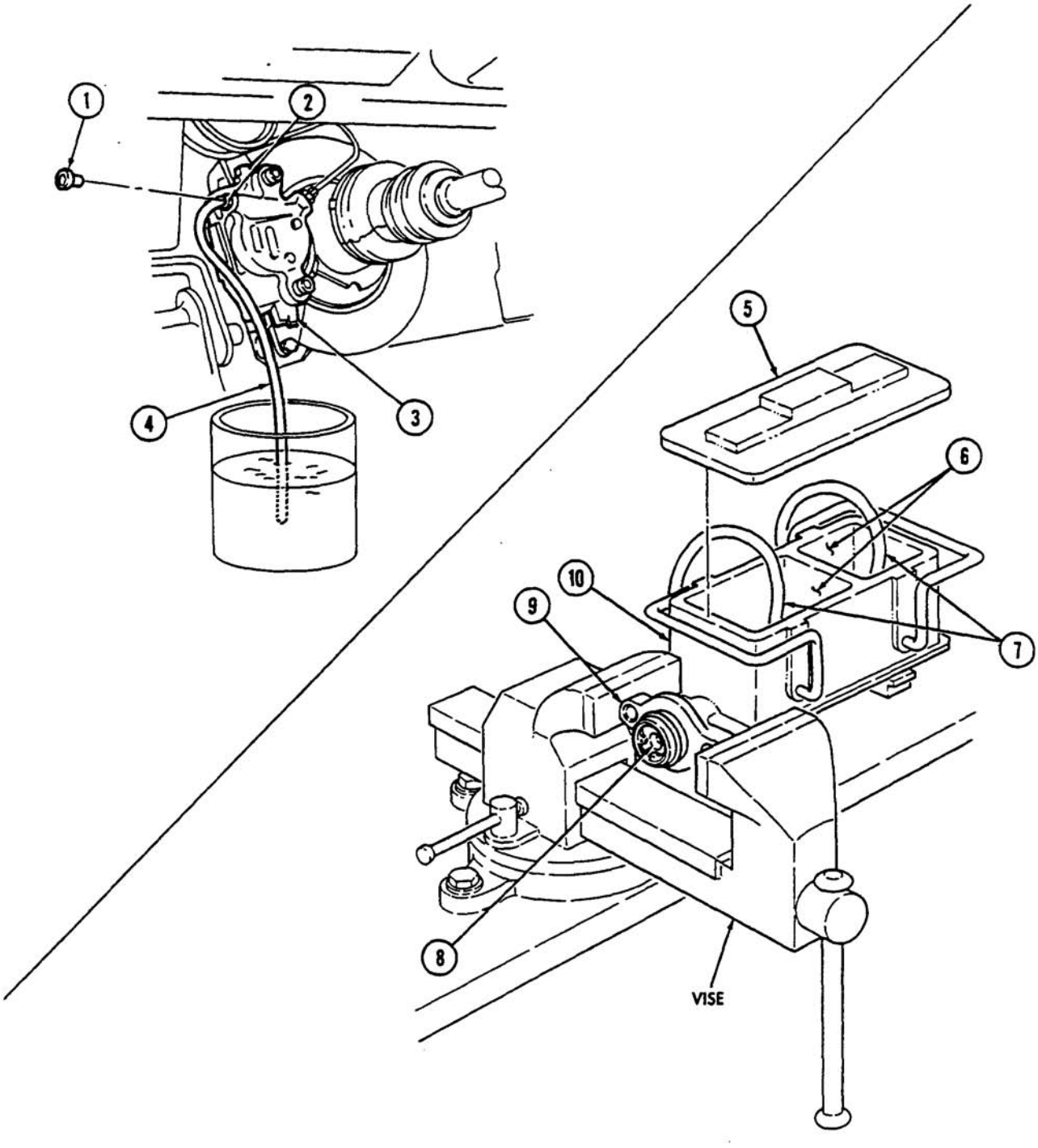

FOLLOW-ON TASKS: • Lower and secure hood (TM 9-2320-387-10).
• Operate vehicle (TM 9-2320-387-10) and check for proper operation.

7-3. SERVICE BRAKE PAD MAINTENANCE

This task covers:

a. Removal
b. Cleaning and Inspection
c. Installation

INITIAL SETUP:

Tools
General mechanic's tool kit: automotive (Appendix B, Item 1)
Maintenance and repair shop equipment: automotive (Appendix B, Item 2)
C-clamp (Appendix B, Item 153)

Special Tools
Crowfoot, 14-mm (Appendix B, Item 141)

Materials/Parts
Grease (Appendix C, Item 34)
Sealing compound (Appendix C, Item 63)
Six two-piece lockwashers (Appendix G, Item 191)

Manual References
TM 9-2320-387-24P

Equipment Condition
Brake protection guards removed (para. 7-11).

General Safety Instructions
Ensure brake pads are installed with linings facing rotor.

Maintenance Level
Unit

a. Removal

CAUTION

Caliper must be supported during removal to prevent damage to brake hose.

NOTE

Perform steps 1 and 2 for right side. Perform steps 3, 4, and 5 for left side.

1. Using crowfoot, remove two capscrews (6), washers (5), clamp (6.1), caliper (3), and yoke (4) from adapter (2).

NOTE

Note positioning of brake pad surfaces for installation.

2. Remove two brake pads (1) from adapter (2).
3. Remove six capscrews (10), two-piece lockwashers (9), and halfshaft (8) from rotor (7). Discard two-piece lockwashers (9).
4. Install two capscrews (10) to hold rotor (7).

NOTE

Note positioning of brake pad surfaces for installation.

5. Remove two brake pads (1) from adapter (2).

7-3. SERVICE BRAKE PAD MAINTENANCE (Cont'd)

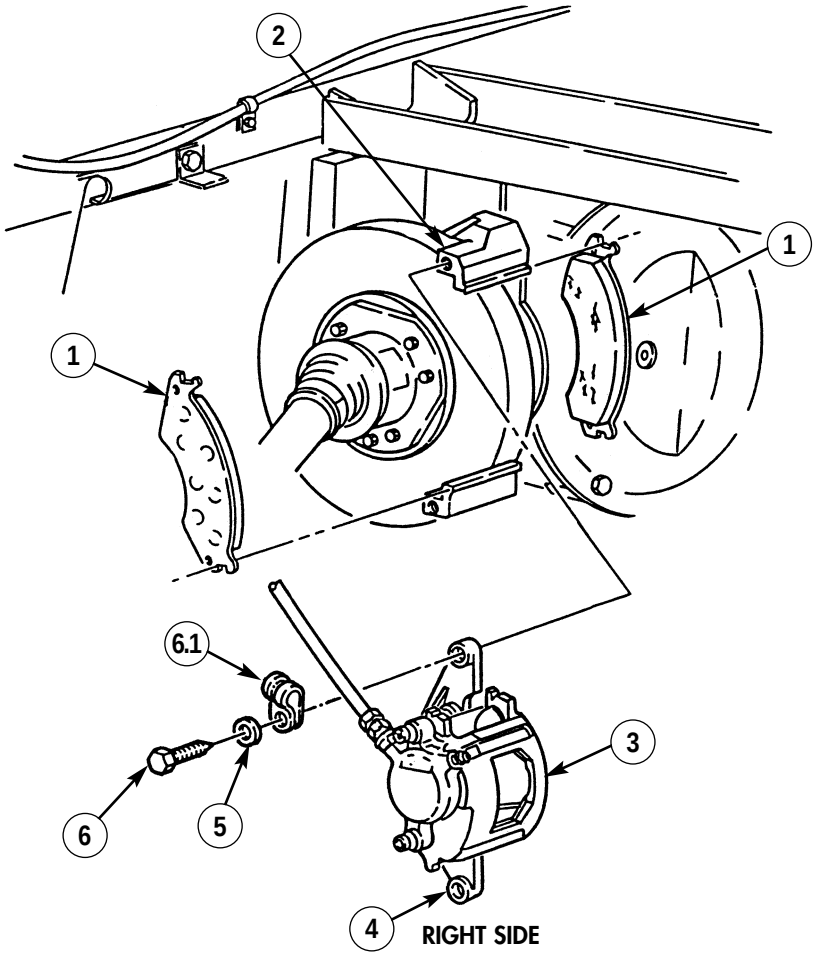

RIGHT SIDE

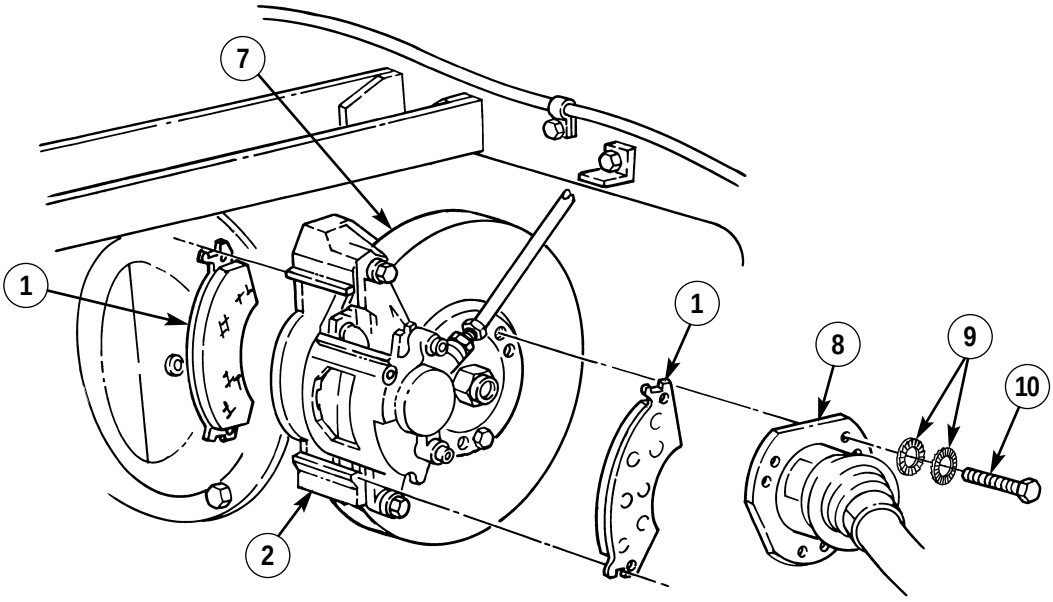

LEFT SIDE

7-3. SERVICE BRAKE PAD MAINTENANCE (Cont'd)

b. Cleaning and Inspection

1. Clean mating surfaces of caliper (1) and adapter (6) and lubricate with grease.
2. Inspect caliper (1) and caliper piston (2) for cracks, pitting, or damage. Replace caliper (1) if cracked, pitted, or damaged (para. 7-4).
3. Inspect dust boot (3) for tears or deterioration. Replace caliper (1) if dust boot (3) is torn or deteriorated (para. 7-4).
4. Inspect rotor (5) for heat cracks, discoloration, pitting, scoring, or wear. Replace rotor (5) if thickness of rotor (5) is less then 13/16 in. (20.7 mm), cracked, pitted, or scored (para. 7-12).

NOTE

- To ensure proper brake function, replace brake pads in pairs on both sides of differential.
- Replace brake pads if thickness is less than 3/16 in. (4.8 mm) and operation in wet and muddy conditions is expected.

5. Inspect brake pads (4) for glazing, oil saturation, or wear. If glazed, oil saturated, or if brake pad thickness is less than 1/8 in. (3.2 mm), replace both pads (4) and pads on opposite caliper.
6. Clean output flange threaded holes (5.1) behind rotor (5) with a 10-mm tap to remove old sealing compound.

c. Installation

WARNING

Ensure brake pads are installed with linings facing rotor. Failure to do this may cause injury to personnel or damage to equipment.

NOTE

Perform steps 1 and 2 for right side. Perform steps 3, 4, and 5 for left side.

1. Position two brake pads (4) on adapter (6).

NOTE

When installing yoke and caliper, use a C-clamp and a block of wood to bottom out piston in caliper. If piston will not bottom out, replace caliper (para. 7-4).

2. Apply sealing compound to tapped holes of adapter (6). Using crowfoot, install yoke (7) and caliper (1) on adapter (6) with clamp (8.1), two washers (8), and capscrews (9). Tighten capscrews (9) to 30-40 lb-ft (41-54 N·m).
3. Install two brake pads (4) on adapter (6).
4. Remove two capscrews (12) from rotor (5).

NOTE

- Ensure all six capscrews holes in the rotor align with holes in output flange.
- New capscrews come with preapplied thread-locking compound, however, still apply sealing compound to threads of new capscrews. If old capscrews are to be used, mating threads must be cleaned and sealing compound applied to threads of capscrews.
- Two-piece lockwashers must be installed in sets of two with serrated sawtooth threads facing each other.

5. Apply sealing compound to six capscrews (12), and install halfshaft (10) on rotor (5) with six two-piece lockwashers (11) and capscrews (12). Tighten capscrews (12) to 58 lb-ft (79 N·m).

7-3. SERVICE BRAKE PAD MAINTENANCE (Cont'd)

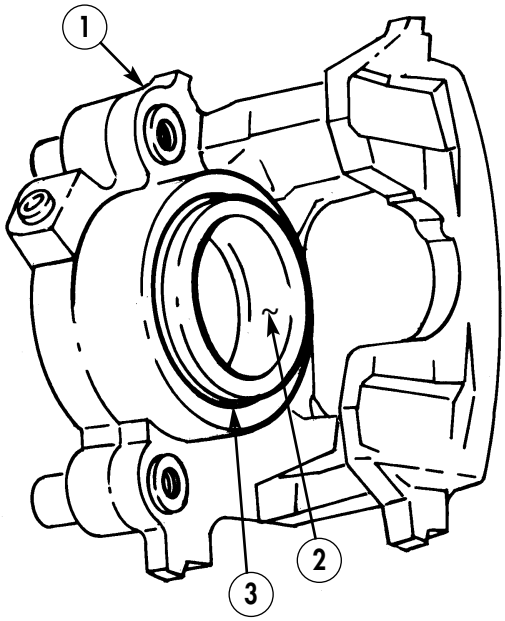

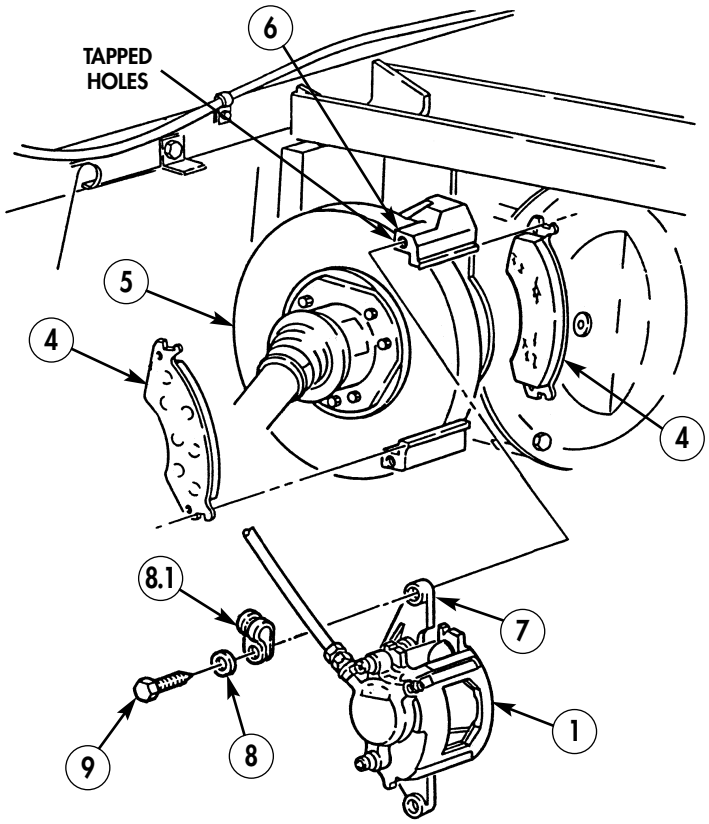

RIGHT SIDE

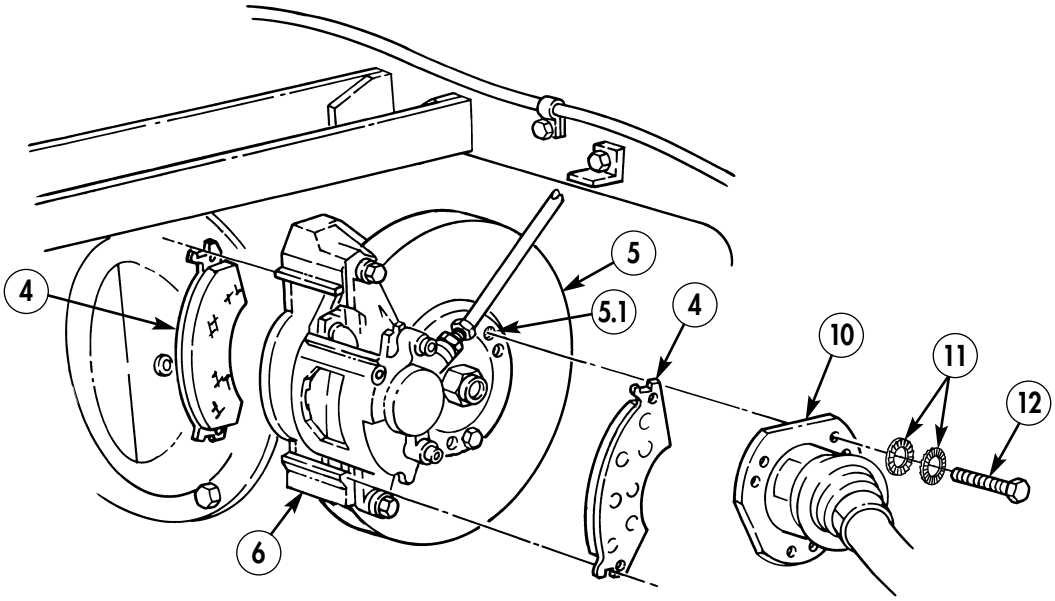

LEFT SIDE

FOLLOW-ON TASK: Install brake protection guards (para. 7-11).

7-4. SERVICE BRAKE CALIPER MAINTENANCE

This task covers:

a. Removal
b. Cleaning and Inspection
c. Installation

INITIAL SETUP:

Tools
General mechanic's tool kit: automotive (Appendix B, Item 1)
Maintenance and repair shop equipment: automotive (Appendix B, Item 2)
C-clamp (Appendix B, Item 153)

Special Tools
Hex-head driver, 7-mm (Appendix B, Item 151)
Crowfoot, 14-mm (Appendix B, Item 141)

Materials/Parts
Copper washer (Appendix G, Item 14)
Grease (Appendix C, Item 34)
Sealing compound (Appendix C, Item 63)

Manual References
TM 9-2320-387-24P

Equipment Condition
- Brake pads removed (para. 7-3).
- Brake protection guards removed (para. 7-11).

General Safety Instructions
Ensure brake pads are installed with linings facing rotor.

Maintenance Level
Unit

NOTE
For replacement of rear dual service/parking brake caliper, refer to para. 7-15.

a. Removal

CAUTION
Cover or plug all open lines and connections immediately after disconnection to prevent contamination. Remove all covers or plugs prior to connection.

NOTE
Perform steps 1 and 2 for right side. Perform steps 3 through 6 for left side.

1. Disconnect hose (1) from coupling (5).
2. Slide yoke (2) and locating pins (3) out from caliper (4).
3. Disconnect hose (1) from coupling (5).
4. Remove two capscrews (8) from rotor (7).
5. Remove rotor (7) from caliper (4) and adapter (6).
6. Using crowfoot, remove two capscrews (10), washers (11), yoke (2), and caliper (4) from adapter (6).

7-4. SERVICE BRAKE CALIPER MAINTENANCE (Cont'd)

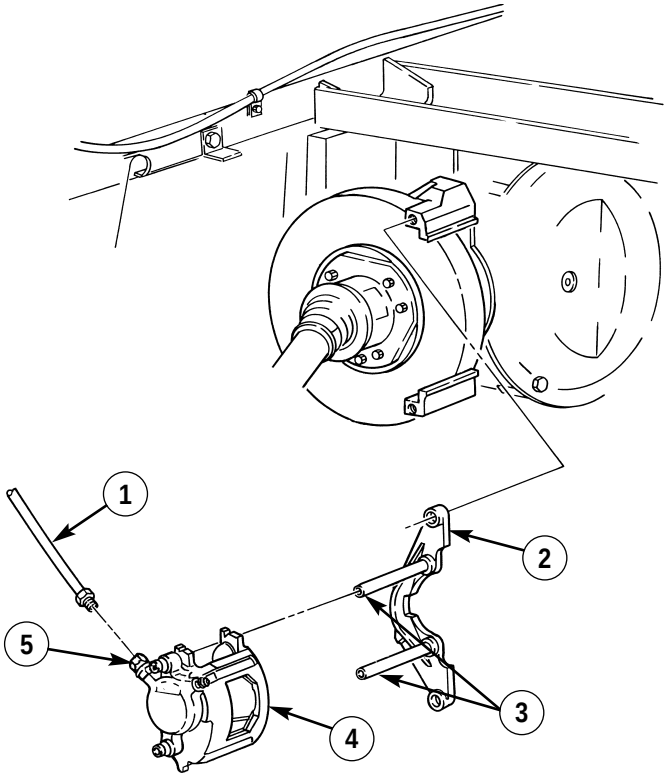

RIGHT SIDE

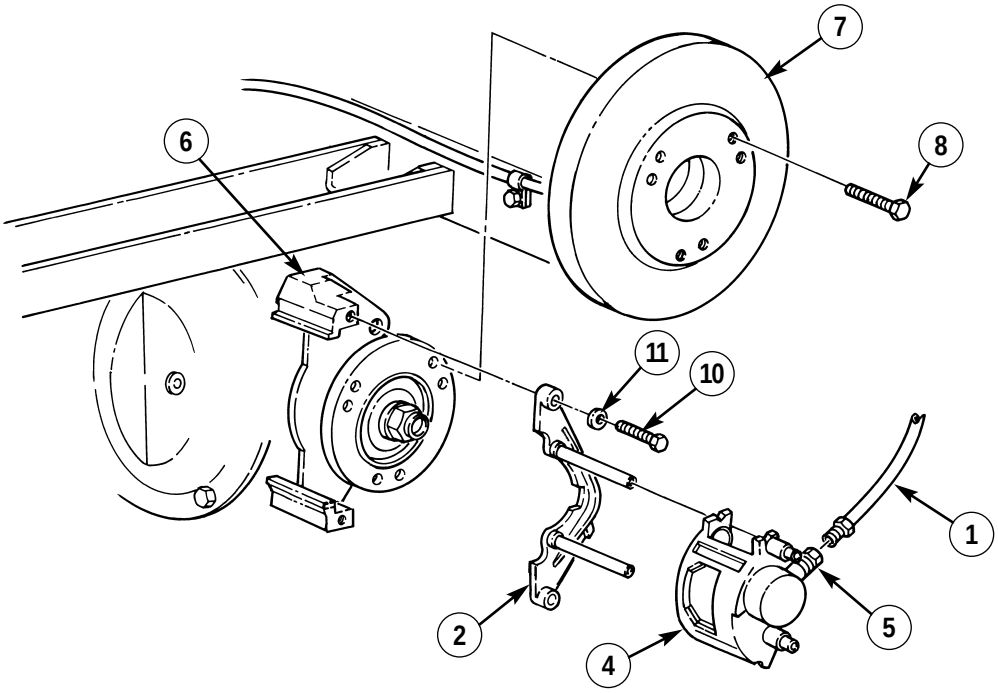

LEFT SIDE

7-4. SERVICE BRAKE CALIPER MAINTENANCE (Cont'd)

7. Remove coupling (1) and copper washer (2) from caliper (3). Discard copper washer (2).

b. Cleaning and Inspection

1. Clean mating surfaces of caliper (3) and adapter (8) and lubricate with grease.
2. Clean cooling fins of rotor (12).
3. Inspect caliper (3) and caliper piston (4) for cracks, pitting, or damage. Replace caliper (3) if cracked, pitted, or damaged.
4. Inspect locating pin bearings and bushings (6) for tears or deterioration. Replace bearings and bushings (6) if torn or deteriorated.
5. Inspect dust boot (5) for tears or deterioration. Replace caliper (3) if dust boot (5) is torn or deteriorated.
6. Inspect yoke locating pins (10) for cracks or corrosion. Perform step 7 if cracked or corroded.
7. Using 7-mm hex-head driver, remove locating pins (10) from yoke (9). Discard locating pins (10).
8. Inspect rotor (12) for heat cracks, discoloration, pitting, or scoring. Replace rotor (12) if cracked, pitted, or scored (para. 7-12).
9. Clean output flange threaded holes (17) with a 10 mm tap to remove old sealing compound.

c. Installation

1. Install copper washer (2) and coupling (1) on caliper (3).

NOTE

- Perform step 2 only if yoke locating pins were replaced.
- Perform steps 3 and 4 for right side. Perform steps 6 through 9 for left side.

2. Apply sealing compound to threads of locating pins (10) and install locating pins (10) in yoke (9). Tighten locating pins (10) to 25-35 lb-ft (34-47 N·m).
3. Install caliper (3) on yoke (9).
4. Connect hose (7) to coupling (11).
5. DELETED
6. Install caliper (3) on yoke (9).
7. Position rotor (12) and caliper (3) on adapter (8) and hold rotor (12) with two capscrews (13).

NOTE

When installing yoke and caliper, use a C-clamp and a block of wood to bottom out piston in caliper. If piston will not bottom out, replace caliper (para. 7-4).

8. Apply sealing compound to tapped holes of adapter (8). Using crowfoot, install yoke (9) and caliper (3) on adapter (8) with two washers (15) and capscrews (16). Tighten two capscrews (16) to 30-40 lb-ft (41-54 N·m).
9. Connect hose (7) to coupling (11).

7-4. SERVICE BRAKE CALIPER MAINTENANCE (Cont'd)

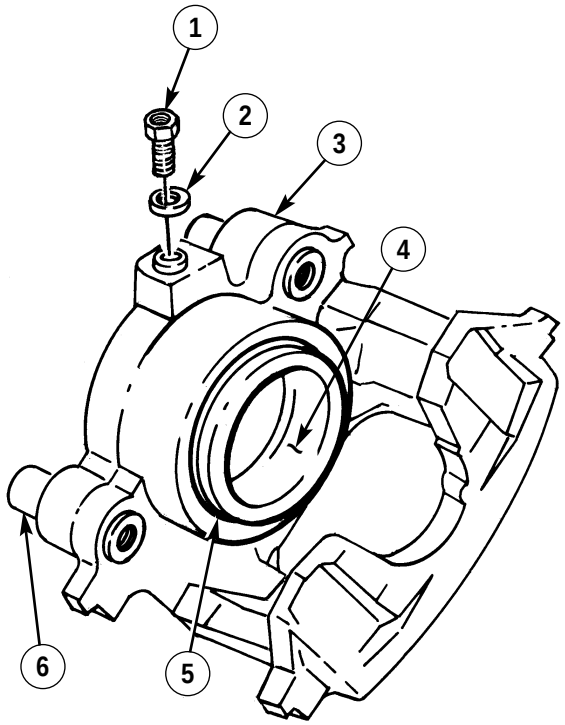

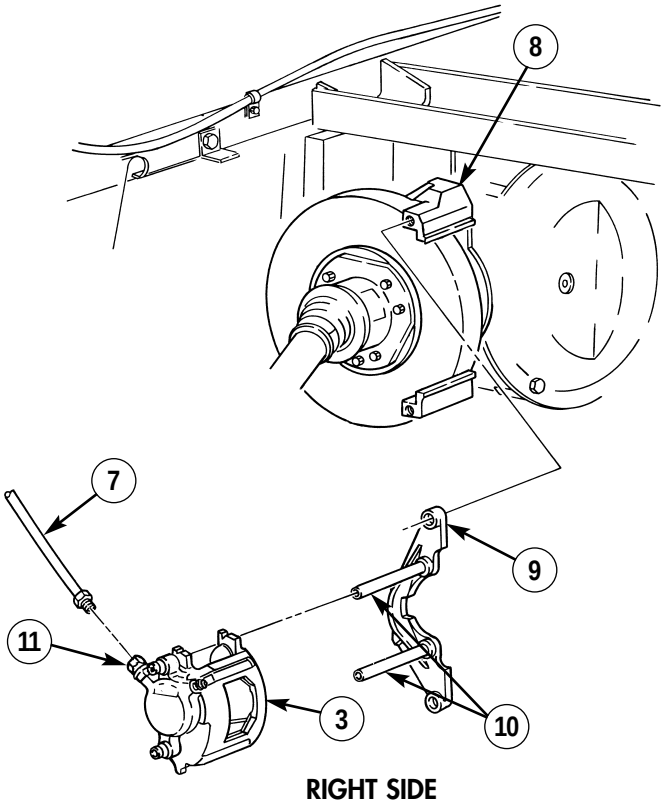

RIGHT SIDE

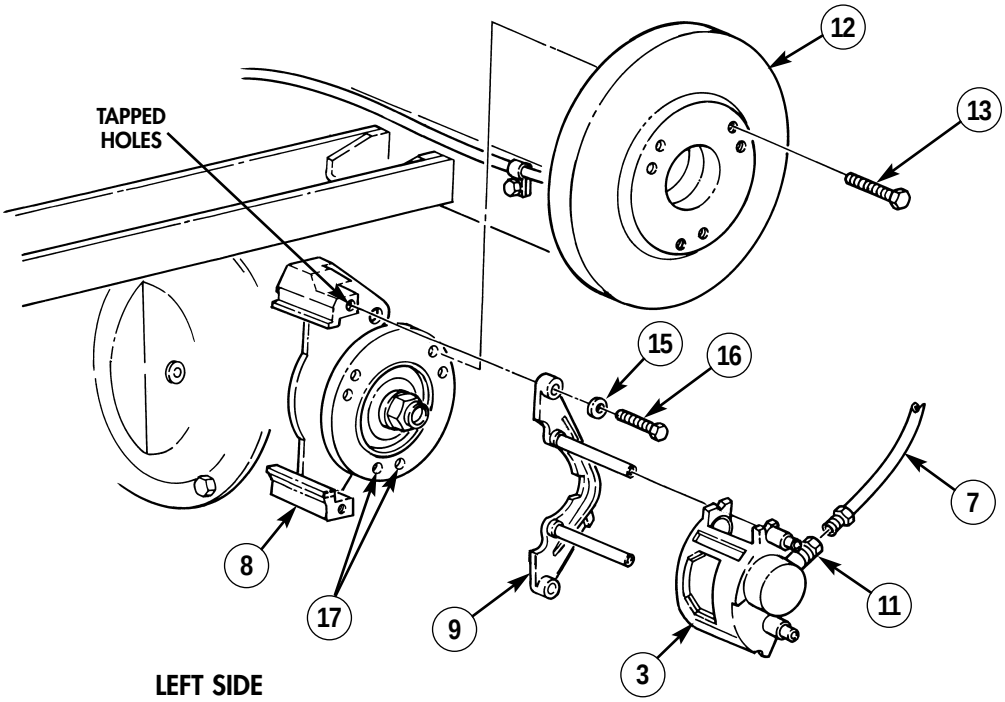

LEFT SIDE

FOLLOW-ON TASKS:
- Install brake pads (para. 7-3).
- Bleed brake system (para. 7-2).
- Install brake protection guards (para. 7-11).

7-5. MASTER CYLINDER MAINTENANCE

This task covers:

a. Removal
b. Installation
c. Bleeding

INITIAL SETUP:

Tools
General mechanic's tool kit:
automotive (Appendix B, Item 1)
Maintenance and repair shop equipment:
automotive (Appendix B, Item 2)

Materials/Parts
Four locknuts (Appendix G, Item 106)

Personnel Required
One mechanic
One assistant

Manual References
TM 9-2320-387-10
TM 9-2320-387-24P

Equipment Condition
- Hood raised and secured (TM 9-2320-387-10).
- Left splash shield removed (para. 10-23).

Maintenance Level
Unit

a. Removal

CAUTION

Cover or plug all open lines and connections immediately after disconnection to prevent contamination. Remove all plugs prior to connection.

NOTE

Perform step 1 for M1114 models only.

1. Remove locknut (10), washer (11), and bracket (12) from hydro-boost (1). Discard locknut (10).

NOTE

Have drainage container ready to catch brake fluid.

2. Disconnect brake lines (5) and (6) from master cylinder (2).
3. Remove locknut (3), washer (4), and differential valve bracket (7) from right master cylinder mounting stud (9). Discard locknut (3).

CAUTION

Do not lean on master cylinder. Damage to master cylinder may result.

4. Remove two locknuts (8) and master cylinder (2) from hydro-boost (1). Discard locknuts (8).

b. Installation

CAUTION

Ensure O-ring is properly seated on master cylinder prior to installation. Damage to master cylinder may result if O-ring is not properly seated.

7-5. MASTER CYLINDER MAINTENANCE (Contd)

1. Install master cylinder (2) on hydro-boost (1) with two locknuts (8). Tighten locknuts (8) to 22 lb-ft (30 N·m).
2. Install differential valve bracket (7) on stud (9) with washer (4) and locknut (3). Tighten locknut (3) to 22 lb-ft (30 N·m).
3. Connect brake lines (5) and (6) to master cylinder (2).

NOTE

Perform step 4 for M1114 models only.

4. Install bracket (12) on hydro-boost (1) with washer (11) and locknut (10) Tighten locknut (10) to 22 lb-ft (30 N·m).

c. Bleeding

NOTE

Master cylinder must be filled (para. 2-12, item 11) and kept at least half full during bleeding operation.

1. Depress brake pedal slowly and hold. Loosen brake line (5) to purge air from the front reservoir.
2. Tighten brake line (5) and release brake pedal.
3. Repeat steps 1 and 2 until front reservoir is purged of air.
4. Repeat steps 1 through 3 for rear reservoir with brake line (6).

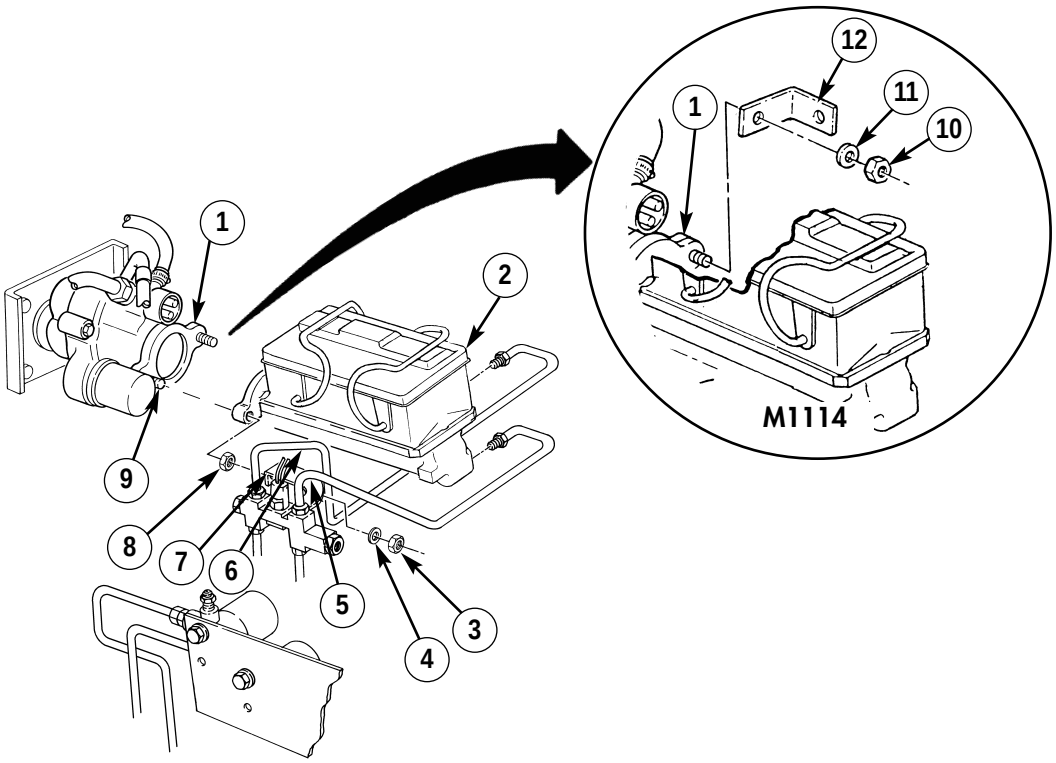

FOLLOW-ON TASKS: • Install left splash shield (para. 10-23).
• Bleed brake system (para. 7-2).

7-6. HYDRO-BOOSTER REPLACEMENT

This task covers:

a. Removal **b. Installation**

INITIAL SETUP:

Tools
General mechanic's tool kit:
automotive (Appendix B, Item 1)
Maintenance and repair shop equipment:
automotive (Appendix B, Item 2)

Materials/Parts
Cotter pin (Appendix G, Item 23)
Spring washer (Appendix G, Item 319)
Four lockwashers (Appendix G, Item 144)
Four locknuts (Appendix G, Item 106)

Personnel Required
One mechanic
One assistant

Manual References
TM 9-2320-387-24P

Equipment Condition
Master cylinder removed (para. 7-5).

Maintenance Level
Unit

a. Removal

CAUTION

Cover or plug all open lines and connections immediately after disconnection to prevent contamination. Remove all plugs prior to connection.

NOTE

Have drainage container ready to catch brake fluid.

1. Mark and disconnect two high-pressure lines (4) and return line (5) from hydro-booster (6).
2. Remove cotter pin (3) and washer (2), and disconnect pushrod (7) from brake pedal bellcrank (13). Remove spring washer (1) from brake pedal bellcrank (13). Discard cotter pin (3) and spring washer (1).
3. Remove four locknuts (12), lockwashers (11), washers (10), hydro-booster (6), and gasket (8) from cowl (9). Discard lockwashers (11) and locknuts (12).

b. Installation

1. Install gasket (8) and hydro-booster (6) on cowl (9) with four washers (10), lockwashers (11), and locknuts (12). Do not tighten locknuts (12).
2. Install spring washer (1) on brake pedal bellcrank (13). Connect hydro-booster pushrod (7) to brake pedal bellcrank (13) with washer (2) and cotter pin (3).
3. Tighten locknuts (12) to 21 lb-ft (29 N·m).
4. Connect two high-pressure lines (4) and return line (5) to hydro-booster (6).

7-6. HYDRO-BOOSTER REPLACEMENT (Cont'd)

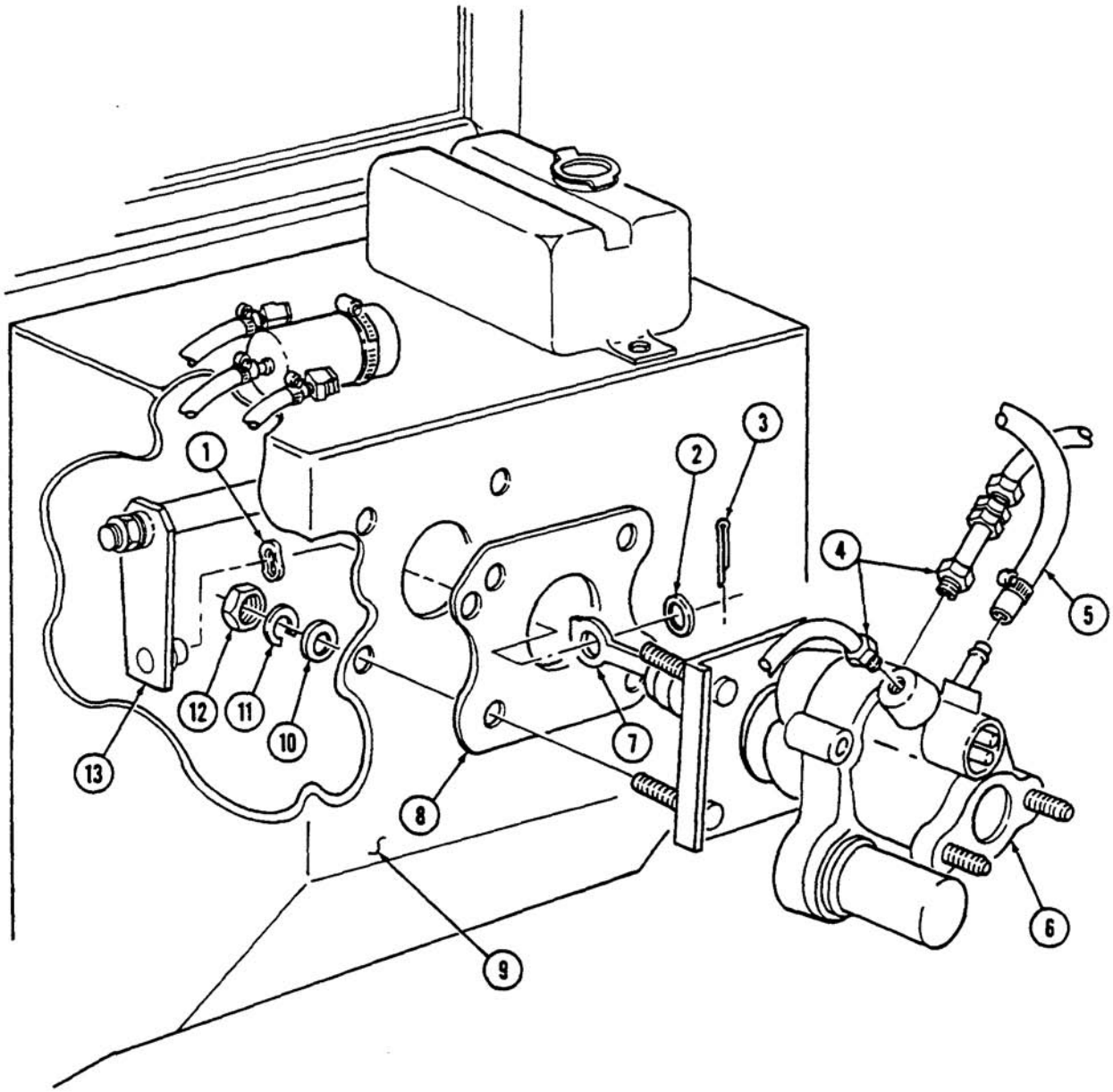

FOLLOW-ON TASK: Install master cylinder (para. 7-5).

7-7. BRAKE LINES REPLACEMENT

This task covers:

- **a. Front Caliper-to-Intermediate Brake Line Removal**
- **b. Front Caliper-to-Intermediate Brake Line Installation**
- **c. Rear Caliper-to-Intermediate Brake Line Removal**
- **d. Rear Caliper-to-Intermediate Brake Line Installation**
- **e. Caliper-to-Intermediate Support Brackets Removal**
- **f. Caliper-to-Intermediate Support Brackets Installation**
- **g. Rear Brake Line Removal**
- **h. Rear Brake Line Installation**
- **i. Intermediate Brake Line Removal**
- **j. Intermediate Brake Line Installation**
- **k. Proportioning Valve-to-Union Brake Line Removal**
- **l. Proportioning Valve-to-Union Brake Line Installation**
- **m. Pressure Limiter Valve-to-Differential Valve Removal**
- **n. Pressure Limiter Valve-to-Differential Valve Installation**

INITIAL SETUP:

Tools

General mechanic's tool kit: automotive (Appendix B, Item 1)

Materials/Parts

Two tiedown straps (Appendix G, Item 324)
Tube coupling (Appendix G, Item 27)

Manual References

TM 9-2320-387-10
TM 9-2320-387-24P

Equipment Condition

Hood raised and secured (TM 9-2320-387-10).

Maintenance Level

Unit

CAUTION

Cover or plug all open lines and connections immediately after disconnection to prevent contamination. Remove all plugs prior to connection.

NOTE

- Have drainage container ready to catch brake fluid.
- Brake line replacement procedures for service brake system and rear dual service/parking brake system are basically the same.
- Left side is shown, right side is similar.

a. Front Caliper-to-Intermediate Brake Line Removal

1. Disconnect left front brake line (1) from tube coupling (13.2).

1.1. Remove tube coupling (13.2) and washer (13.1) from caliper (13). Discard tube coupling (13.2).

2. Remove capscrew (15), washer (14), and clamp (11) from yoke (12).
3. Remove capscrew (7), washer (6), and clamp (5) from bracket (8).
4. Remove two tiedown straps (10) from brake lines (9) and (1). Discard tiedown straps (10).
5. Remove clip (4) and left front brake line (1) from bracket (2) and intermediate brake line (3).

b. Front Caliper-to-Intermediate Brake Line Installation

1. Install left front brake line (1) on intermediate brake line (3) and bracket (2) with clip (4).
2. Install clamp (5) and left front brake line (1) on bracket (8) with washer (6) and capscrew (7). Secure brake lines (9) and (1) with two tiedown straps (10).

7-7. BRAKE LINES REPLACEMENT (Cont'd)

3. Install clamp (11) and brake line (1) on yoke (12) with washer (14) and capscrew (15).
4. Install washer (13.1) and tube coupling (13.2) on caliper (13).
5. Connect left front brake line (1) to tube coupling (13.2).

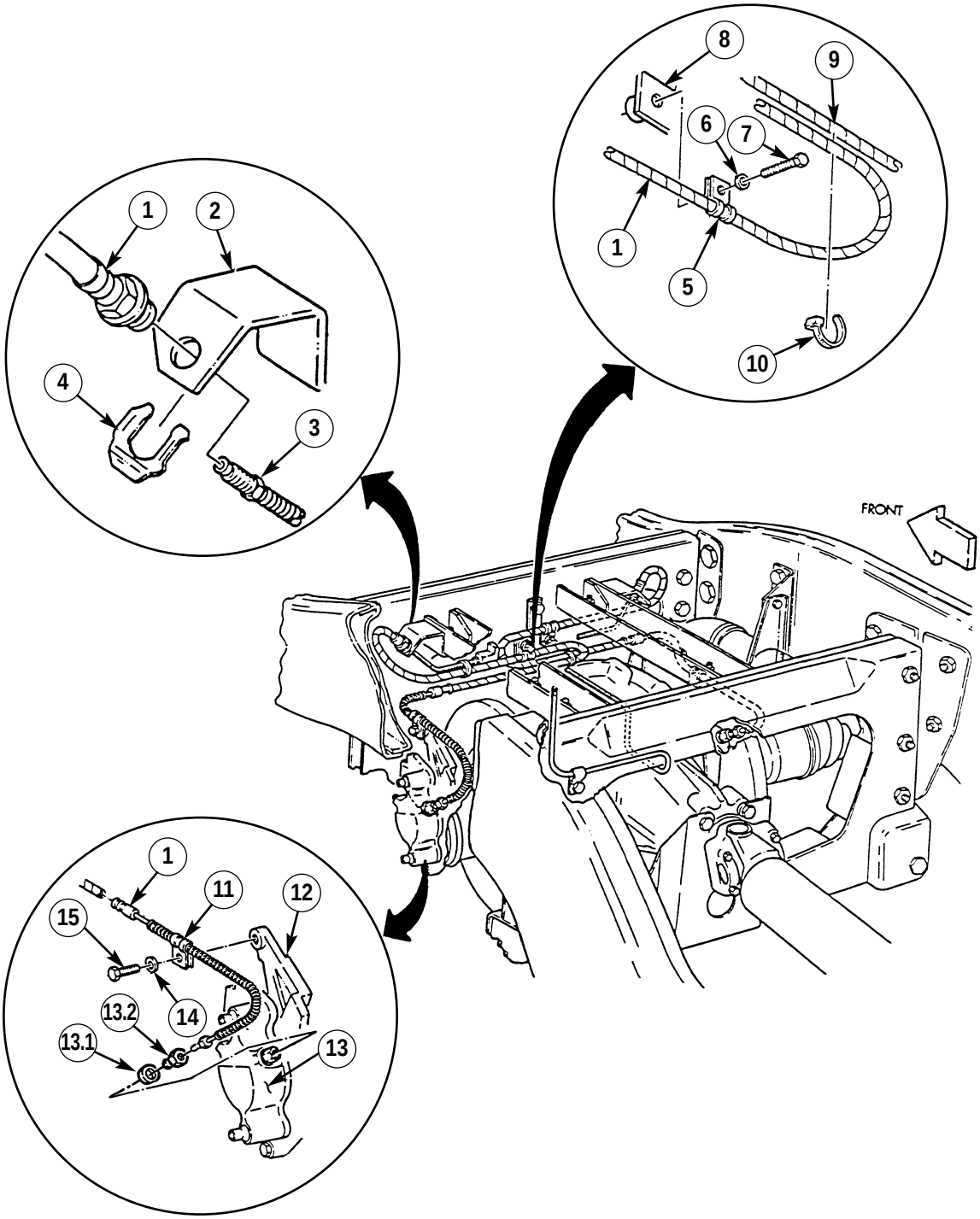

7-7. BRAKE LINES REPLACEMENT (Cont'd)

NOTE

Left side shown, right side similar.

c. Rear Caliper-to-Intermediate Brake Line Removal

1. Disconnect left rear brake line (1) from caliper adapter fitting (7.2).
1.1. Remove tube coupling (7.2) and washer (7.1) from caliper (7). Discard tube coupling (7.2).
2. Remove capscrew (9), washer (8), and clamp (5) from yoke (6).
3. Remove capscrew (10), clamp (11), and brake line (1) from bracket (12).
4. Remove clip (4) and left rear brake line (1) from bracket (2) and intermediate brake line (3).

d. Rear Caliper-to-Intermediate Brake Line Installation

1. Install left rear brake line (1) on intermediate brake line (3) and bracket (2) with clip (4).
2. Install clamp (11) and brake line (1) on bracket (12) with capscrew (10).
3. Install clamp (5) on yoke (6) with washer (8) and capscrew (9).
4. Install washer (7.1) and tube coupling (7.2) on caliper (7).
5. Connect left rear brake line (1) to tube coupling (7.2).

7-7. BRAKE LINES REPLACEMENT (Cont'd)

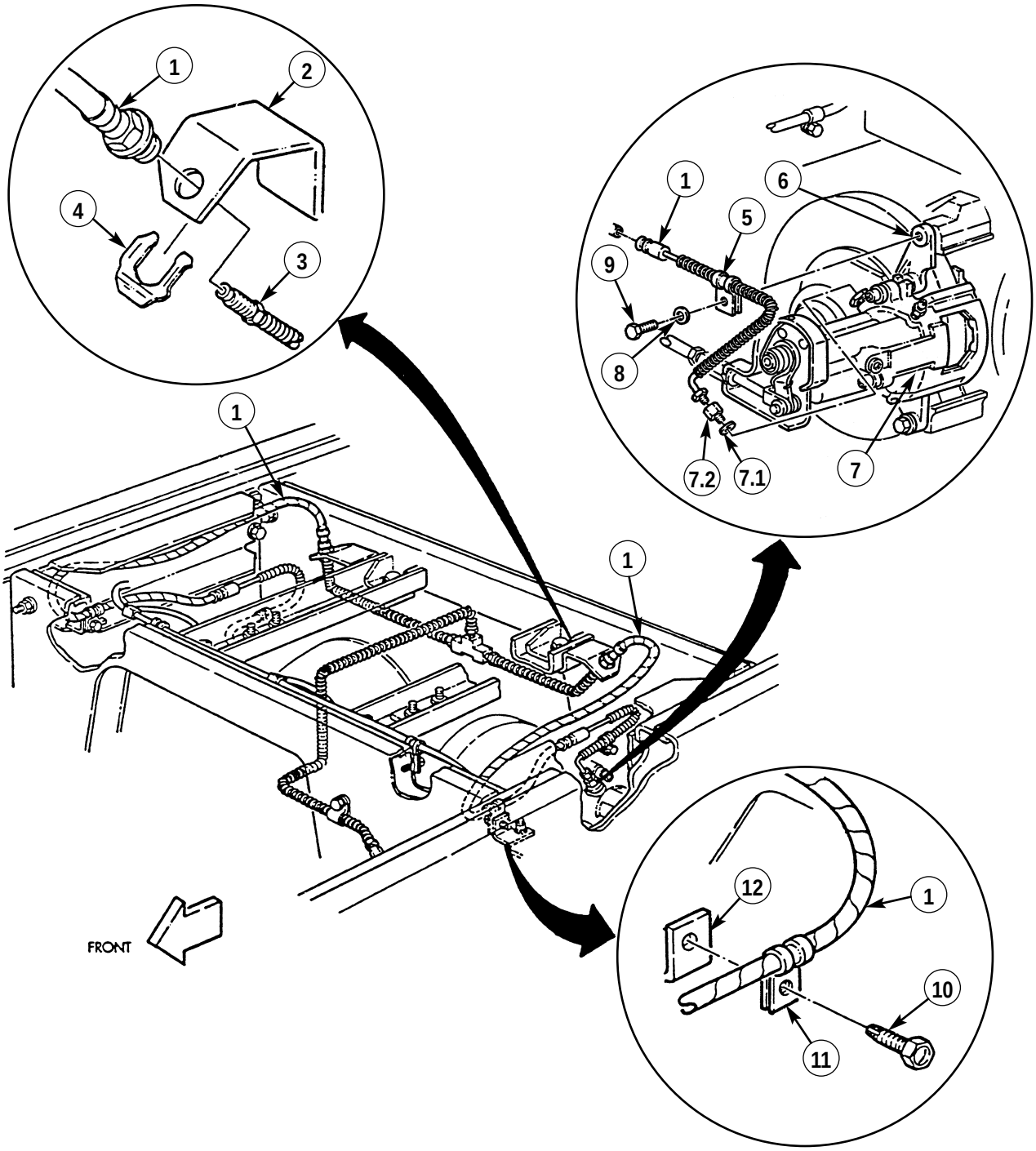

7-7. BRAKE LINES REPLACEMENT (Cont'd)

e. Caliper-to-Intermediate Support Brackets Removal

NOTE

Perform steps 1 through 3 for front support bracket. Perform steps 4 through 6 for rear support bracket.

1. Remove two tiedown straps (8) from front brake lines (4) and intermediate brake line (11).
2. Remove two capscrews (7), washers (6), and clamps (5) from support bracket (2).
3. Remove nut (10), washer (9), capscrew (3), and support bracket (2) from crossmember (1).
4. Remove capscrew (13), clamp (14), and brake line (12) from left support bracket (15).
5. Remove capscrew (16), washer (17), and left support bracket (15) from frame bracket (18).
6. Repeat steps 4 and 5 for right support bracket.

f. Caliper-to-Intermediate Support Brackets Installation

NOTE

Perform steps 1 through 3 for front support bracket. Perform steps 4 through 6 for rear support bracket.

1. Install support bracket (2) on crossmember (1) with capscrew (3), washer (9), and nut (10).
2. Install two clamps (5) on support bracket (2) with two washers (6) and capscrews (7).
3. Secure front brake lines (4) and intermediate brake line (11) with two tiedown straps (8).
4. Install left support bracket (15) on frame bracket (18) with washer (17) and capscrew (16).
5. Install brake line (12) and clamp (14) on support bracket (15) with capscrew (13).
6. Repeat steps 4 and 5 for right support bracket.

7-7. BRAKE LINES REPLACEMENT (Cont'd)

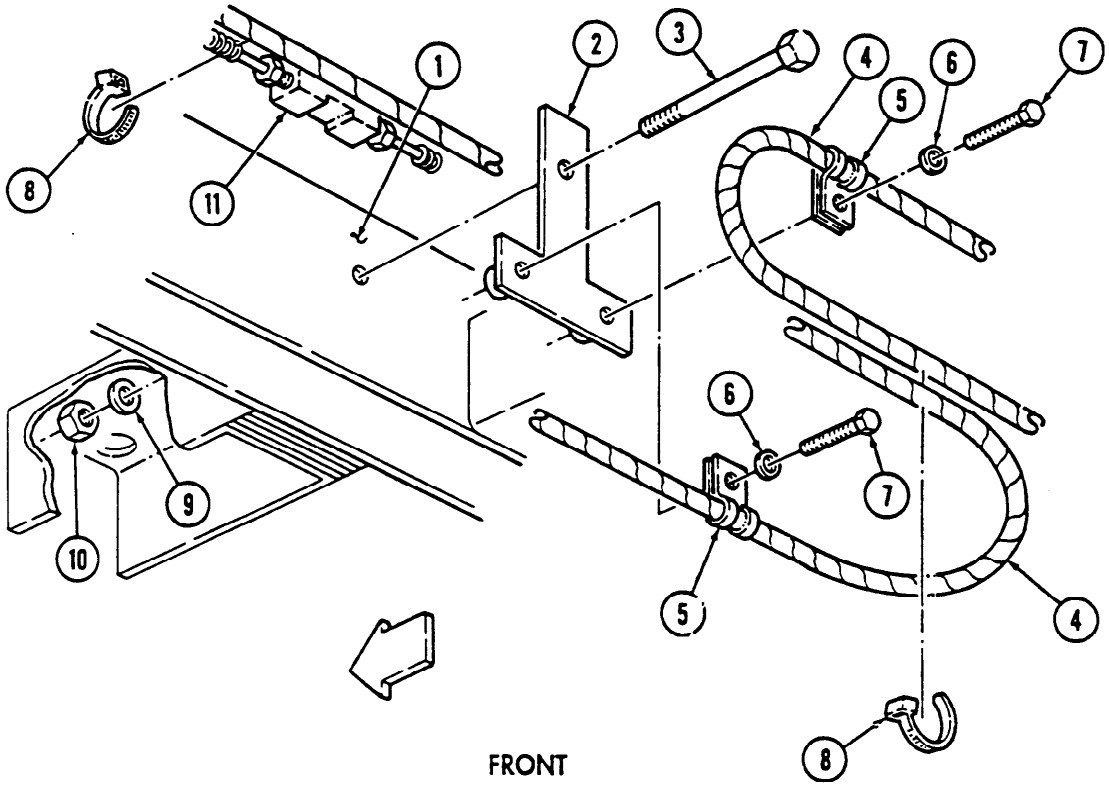

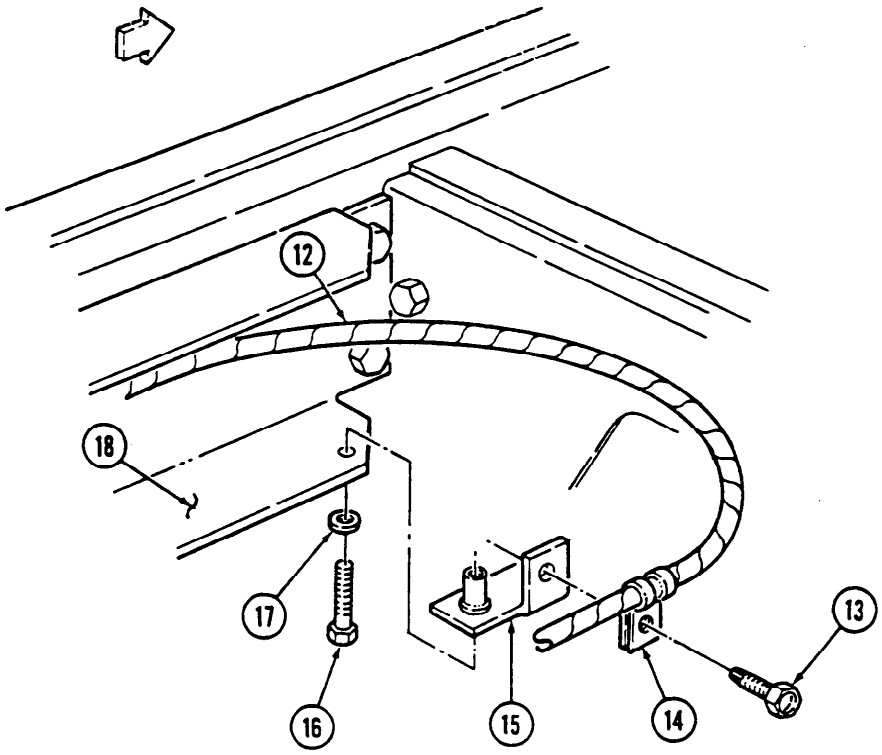

7-7. BRAKE LINES REPLACEMENT (Cont'd)

g. Rear Brake Line Removal

1. Disconnect rear brake line (2) from rear union (1).
2. Remove capscrew (5) and clamp (4) from rear brake line (2) and forward rear crossmember (3).
3. Disconnect rear brake line (2) from intermediate brake line (6).

h. Rear Brake Line Installation

1. Connect rear brake line (2) to intermediate brake line (6).
2. Install rear brake line (2) on forward rear crossmember (3) with clamp (4) and capscrew (5).
3. Connect rear brake line (2) to rear union (1).

i. Intermediate Brake Line Removal

1. Disconnect intermediate brake line (6) from rear brake line (2).
2. Remove five capscrews (8) and clamps (7) from intermediate brake line (6) and frame (9).
3. Disconnect coupling (11) from proportioning valve-to-union brake line (10).

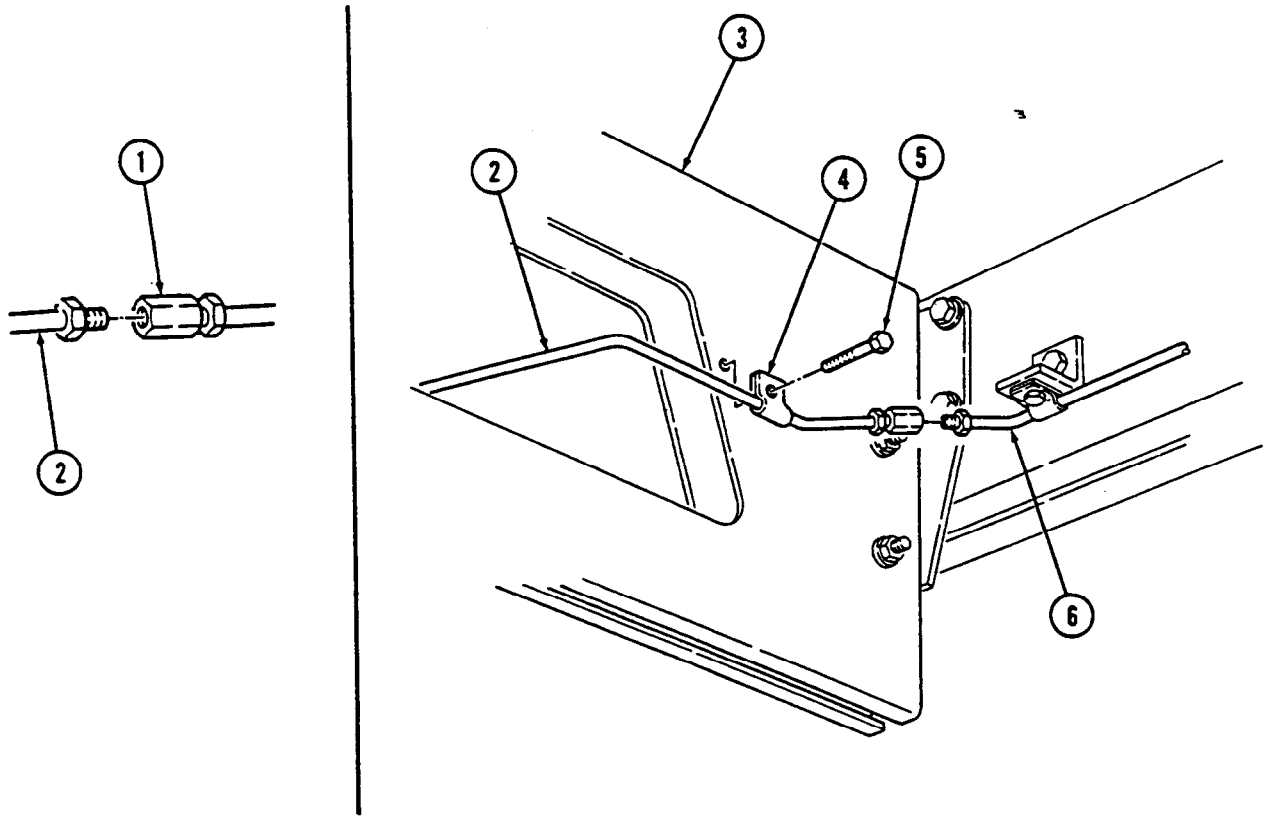

7-7. BRAKE LINES REPLACEMENT (Cont'd)

j. Intermediate Brake Line Installation

1. Connect coupling (11) to proportioning valve-to-union brake line (10).
2. Connect intermediate brake line (6) to rear brake line (2).
3. Install intermediate brake line (6) on frame (9) with five clamps (7) and capscrews (8).

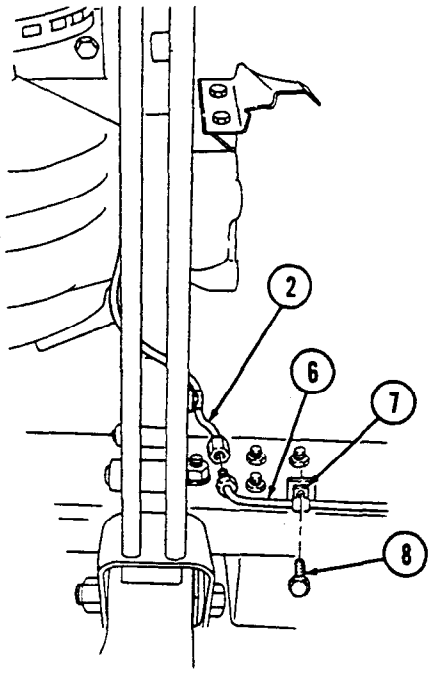

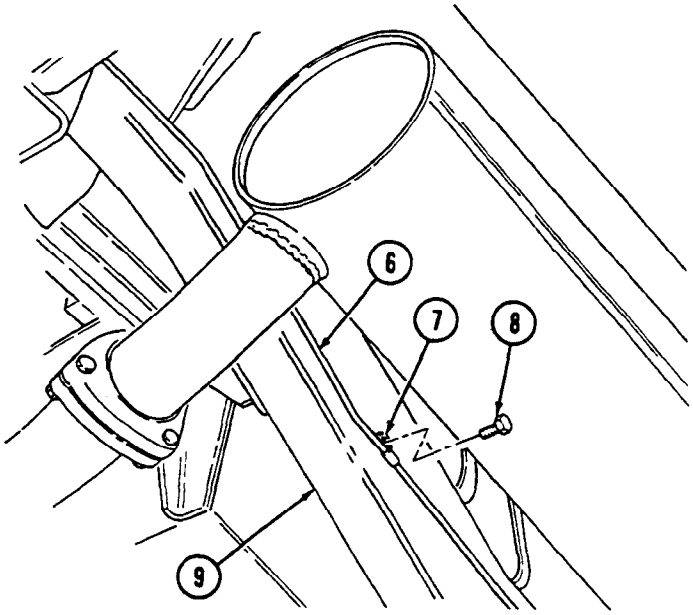

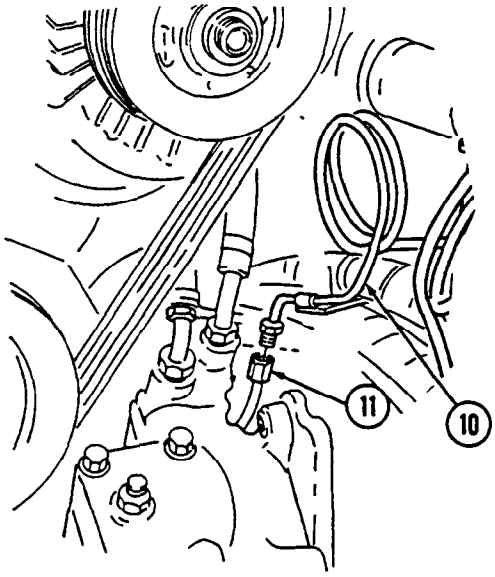

7-7. BRAKE LINES REPLACEMENT (Cont'd)

k. Proportioning Valve-to-Union Brake Line Removal

1. Disconnect brake line (2) from proportioning valve (3).
2. Remove nut (7), washer (6), capscrew (1), clamp (10), and brake line (2) from bracket (8).
3. Remove brake line (2) from coupling (9).
4. Disconnect brake line (4) from proportioning valve (3).
5. Remove brake line (4) from union (5).

l. Proportioning Valve-to-Union Brake Line Installation

1. Install brake line (4) on union (5).
2. Connect brake line (4) to proportioning valve (3).
3. Install brake line (2) on coupling (9).
4. Install brake line (2) and clamp (10) on bracket (8) with capscrew (1), washer (6), and nut (7).
5. Connect brake line (2) to proportioning valve (3).

m. Pressure Limiter Valve-to-Differential Valve Removal

1. Disconnect brake lines (13) and (14) from pressure limiter valves (11) and (15).
2. Remove brake lines (13) and (14) from differential valve (12).

n. Pressure Limiter Valve-to-Differential Valve Installation

1. Install brake lines (13) and (14) on differential valve (12).
2. Connect brake lines (13) and (14) to pressure limiter valves (11) and (15).

7-7. BRAKE LINES REPLACEMENT (Cont'd)

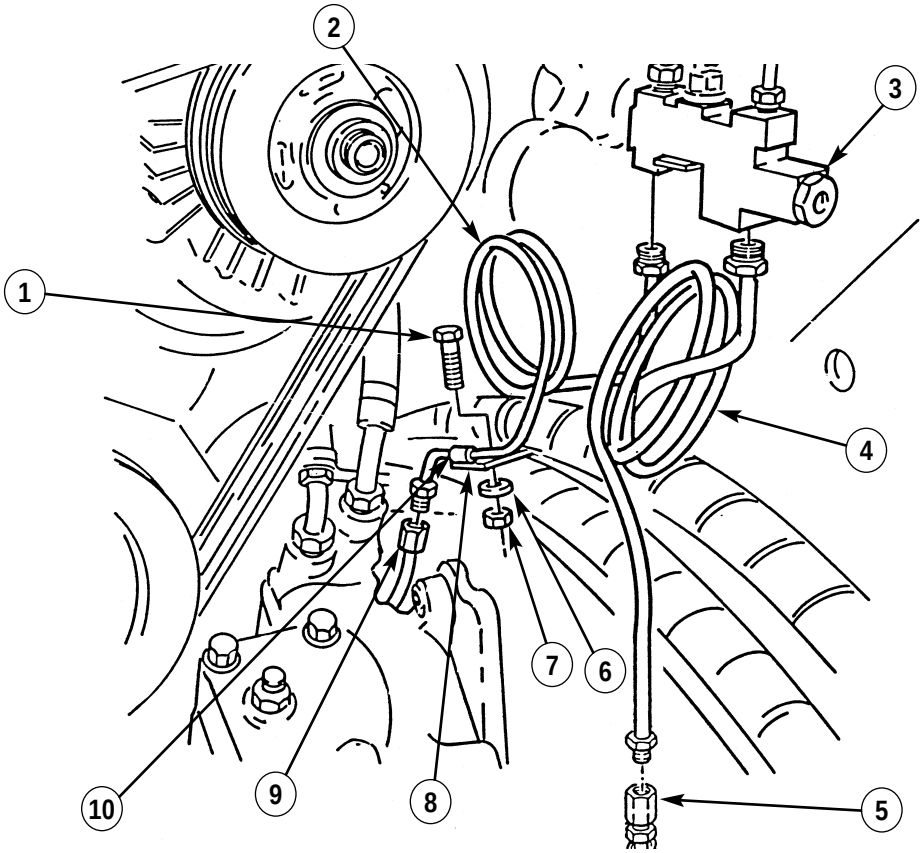

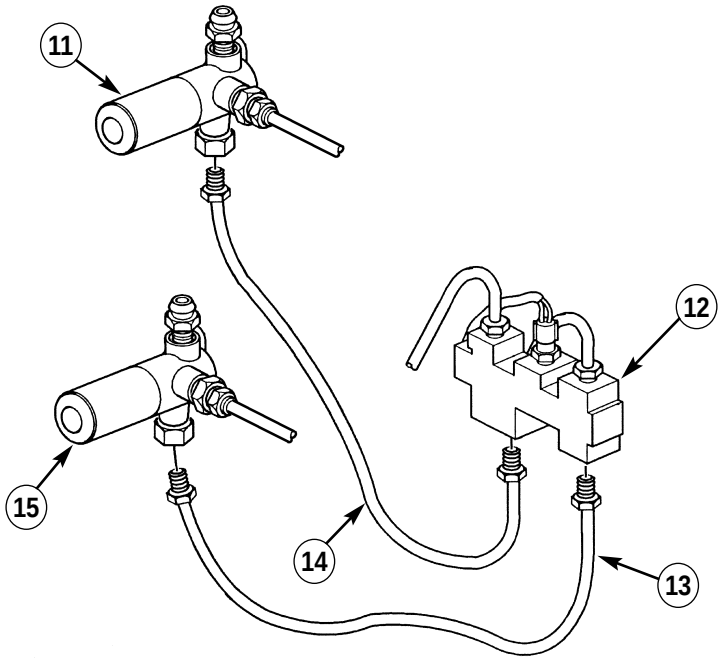

FOLLOW-ON TASK: Bleed brake system (para. 7-2).

7-8. BRAKE PRESSURE LIMITER VALVE REPLACEMENT

This task covers:

a. Removal **b. Installation**

INITIAL SETUP:

Tools
General mechanic's tool kit:
automotive (Appendix B, Item 1)

Materials/Parts
Two lockwashers (Appendix G, Item 185)

Manual References
TM 9-2320-387-10
TM 9-2320-387-24P

Equipment Condition
- Hood raised and secured (TM 9-2320-387-10).
- Battery ground cables disconnected (para. 4-68).

Maintenance Level
Unit

a. Removal

CAUTION

Cover or plug all open lines and connections immediately after disconnection to prevent contamination. Remove all covers or plugs prior to connection.

NOTE

Have drainage container ready to catch brake fluid.

1. Disconnect brake lines (6) and (7) from adapter fittings (8) on brake pressure limiter valves (1).
2. Remove four adapter fittings (8) from two pressure limiter valves (1).
3. Remove two capscrews (3), lockwashers (4), washers (5), and pressure limiter valves (1) from bracket (2). Discard lockwashers (4).

b. Installation

1. Install two pressure limiter valves (1) on bracket (2) with two washers (5), lockwashers (4), and capscrews (3).
2. Install four adapter fittings (8) on two pressure limiter valves (1).
3. Connect brake lines (6) and (7) to adapter fittings (8) on brake pressure limiter valves (1).

7-8. BRAKE PRESSURE LIMITER VALVE REPLACEMENT (Cont'd)

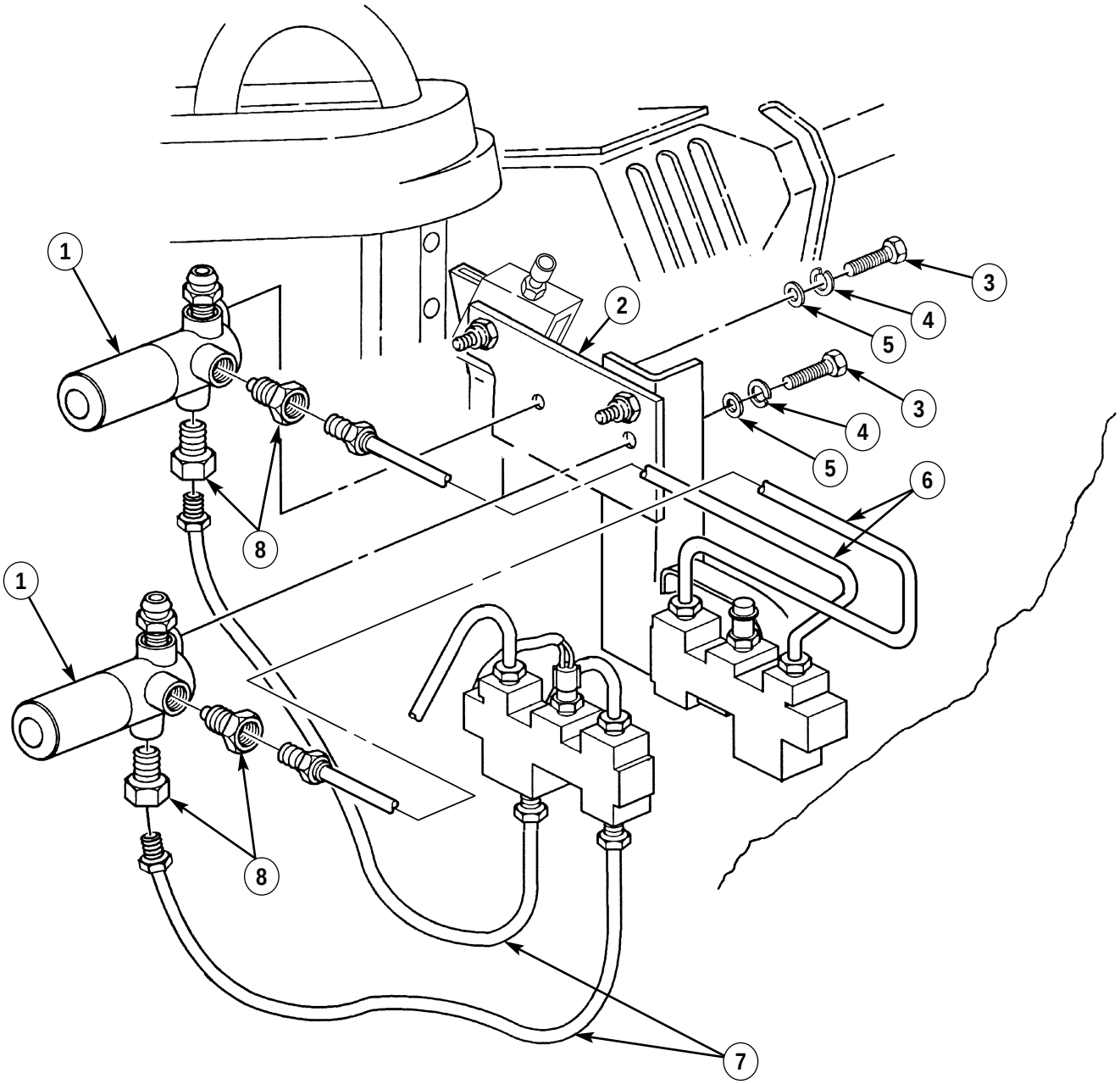

FOLLOW-ON TASKS:
- Bleed brake system (para. 7-2).
- Lower and secure hood (TM 9-2320-387-10).
- Connect battery ground cables (para. 4-68).

7-9. SERVICE BRAKE PEDAL REPLACEMENT

This task covers:

a. Removal **b. Installation**

INITIAL SETUP:

Tools

General mechanic's tool kit:
automotive (Appendix B, Item 1)
Maintenance and repair shop equipment:
automotive (Appendix B, Item 2)

Special Tools

Crowfoot, 7/8-in. (Appendix B, Item 142)
Socket adapter (Appendix B, Item 135)

Materials/Parts

Cotter pin (Appendix G, Item 23)
Spring washer (Appendix G, Item 319)
Two bearing sleeves (Appendix G, Item 3)
Grease (Appendix C, Item 34)

Manual References

TM 9-2320-387-10
TM 9-2320-387-24P

Equipment Condition

- Protective Control Box (PCB) removed (para. 4-4).
- Stoplight switch removed (para. 4-60).

Maintenance Level

Unit

a. Removal

1. Disconnect return spring (4) from brake pedal bracket (12).
2. Remove cotter pin (7), washer (8), hydro-booster pushrod (5), and spring washer (9) from brake pedal bellcrank (10). Discard cotter pin (7) and spring washer (9).
3. Remove nut (6), washer (2), pivot pin (1), washer (2), and brake pedal assembly (11) from bracket (3).
4. Remove two bearing sleeves (13) from brake pedal assembly (11). Discard bearing sleeves (13).

b. Installation

1. Apply grease to inside of two bearing sleeves (13) and install bearing sleeves (13) in brake pedal assembly (11).
2. Install brake pedal assembly (11) on bracket (3) with washer (2), pivot pin (1), washer (2), and nut (6). Using adapter and crowfoot, tighten nut (6) to 60 lb-ft (81 N·m).
3. Install spring washer (9) and hydro-booster pushrod (5) on brake pedal bellcrank (10) with washer (8) and cotter pin (7).
4. Connect return spring (4) to brake pedal bracket (12).

7-9. SERVICE BRAKE PEDAL REPLACEMENT (Cont'd)

7-9. SERVICE BRAKE PEDAL REPLACEMENT (Cont'd)

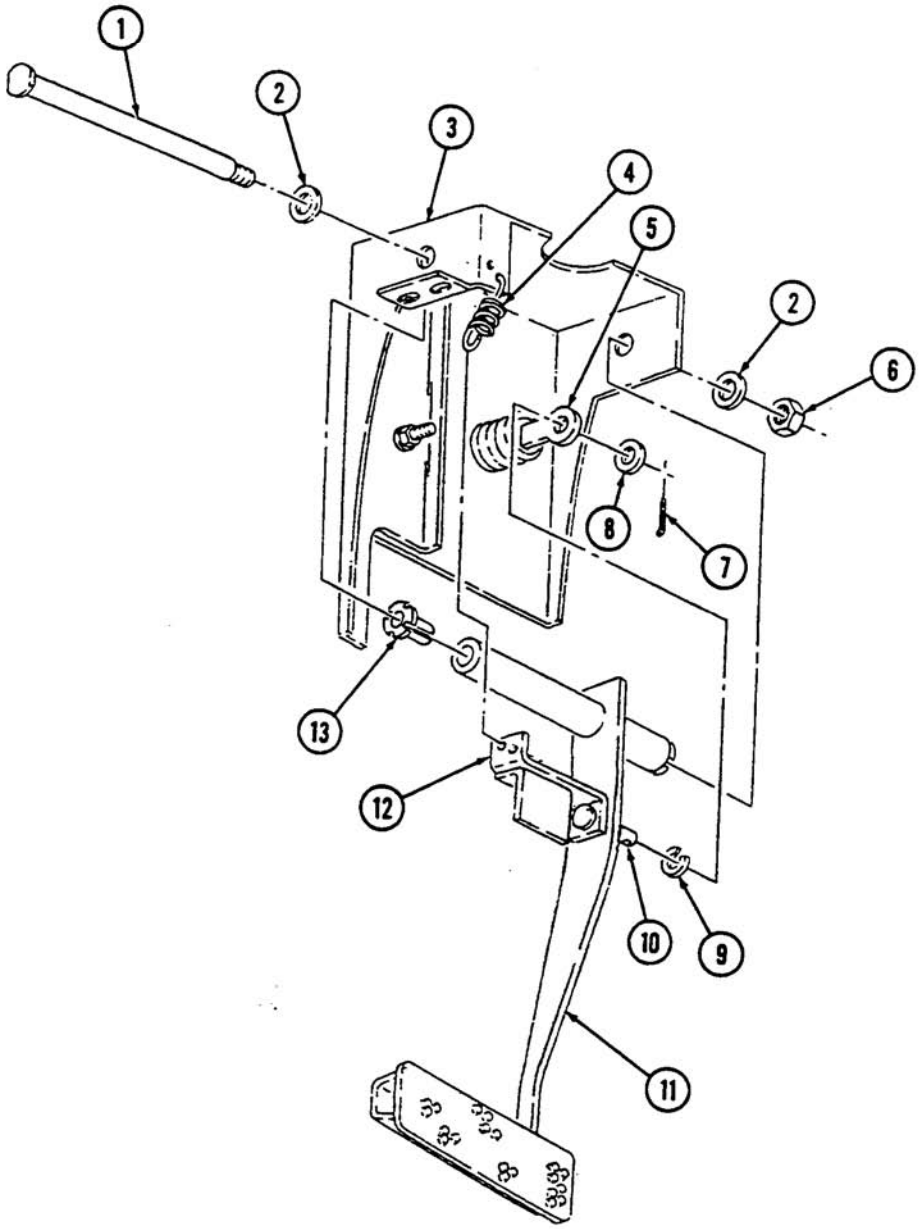

FOLLOW-ON TASKS:
- Install stoplight switch (para. 4-60).
- Install protective control box (para. 4-4).
- Operate vehicle (TM 9-2320-387-10) and check brakes for proper operation.

7-10. PROPORTIONING VALVE AND DIFFERENTIAL VALVE REPLACEMENT

This task covers:

a. Differential Valve Removal
b. Differential Valve Installation
c. Proportioning Valve Removal
d. Proportioning Valve Installation

INITIAL SETUP:

Tools
General mechanic's tool kit:
automotive (Appendix B, Item 1)
Maintenance and repair shop equipment:
automotive (Appendix B, Item 2)

Materials/Parts
Locknut (Appendix G, Item 78)
Locknut (Appendix G, Item 106)
Lubricating oil (Appendix C, Item 46)

Manual References
TM 9-2320-387-10
TM 9-2320-387-24P

Equipment Condition
- Battery ground cables disconnected (para. 4-68).
- Hood raised and secured (TM 9-2320-387-10).

Maintenance Level
Unit

CAUTION

- Cover or plug all open lines and connections immediately after disconnection to prevent contamination. Remove all covers or plugs prior to connection.
- Do not attempt to disassemble proportioning valve. Damage to equipment will result.

NOTE

Have drainage container ready to catch brake fluid.

a. Differential Valve Removal

1. Disconnect electrical connector (2) from differential valve (4).
2. Disconnect two brake lines (3) from differential valve (4).
3. Disconnect two brake lines (5) from differential valve (4).
4. Remove locknut (6), washer (7), and differential valve (4) with differential valve bracket (8) from hydro-boost (1). Discard locknut (6).

b. Differential Valve Installation

1. Install differential valve (4) and differential valve bracket (8) on hydro-boost (1) with washer (7) and locknut (6). Tighten locknut (6) to 22 lb-ft (30 N·m).
2. Connect two brake lines (5) to bottom of differential valve (4).
3. Connect two brake lines (3) to top of differential valve (4).
4. Apply lubricating oil to pins (9) of differential valve (4).
5. Connect electrical connector (2) to differential valve (4).

c. Proportioning Valve Removal

1. Disconnect two brake lines (17) from proportioning valve (16).
2. Disconnect two brake lines (15) from proportioning valve (16).
3. Remove locknut (14), washer (13), screw (11), and proportioning valve (16) with proportioning valve bracket (12) from bracket (10). Discard locknut (14).

7-10. PROPORTIONING VALVE AND DIFFERENTIAL VALVE REPLACEMENT (Cont'd)

d. Proportioning Valve Installation

1. Install proportioning valve (16) and proportioning valve bracket (12) on bracket (10) with screw (11), washer (13), and locknut (14). Tighten locknut (14) to 22 lb-ft (30 N·m).
2. Connect two brake lines (15) to bottom of proportioning valve (16).
3. Connect two brake lines (17) to top of proportioning valve (16).

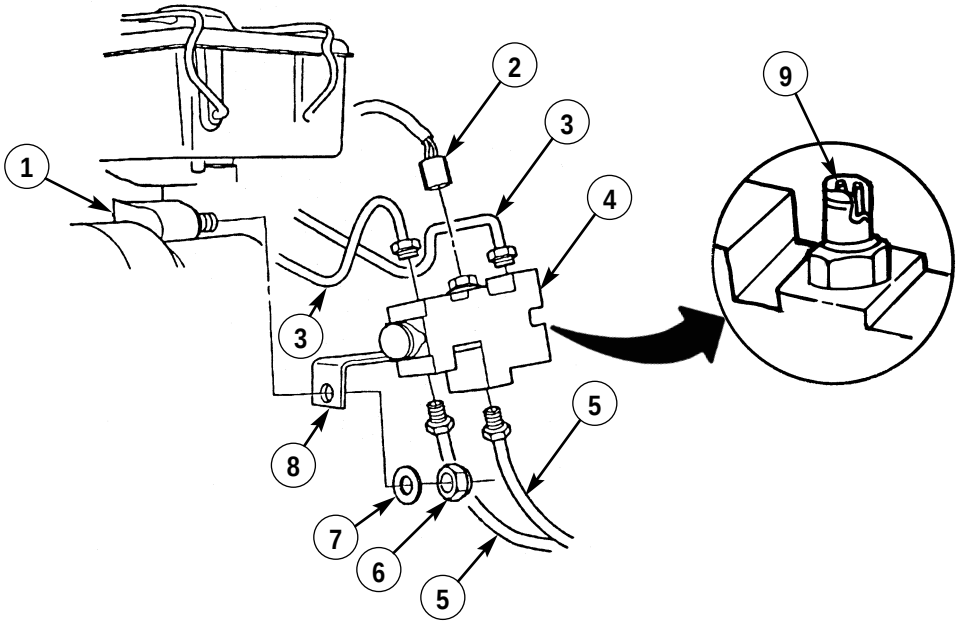

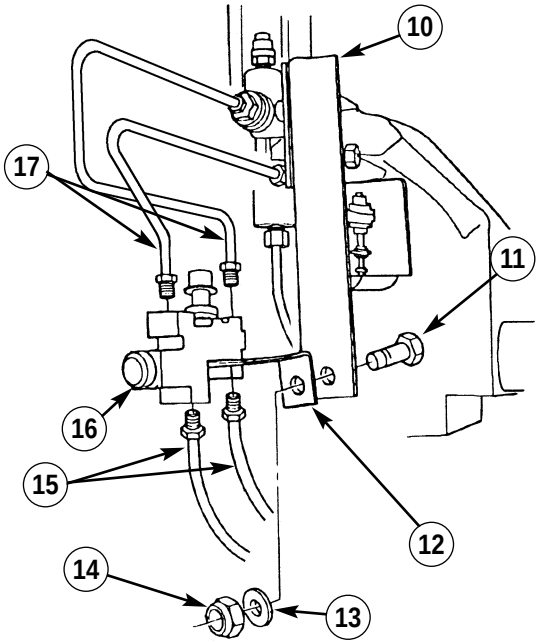

FOLLOW-ON TASKS:
- Connect battery ground cables (para. 4-68).
- Bleed brake system (para. 7-2).

7-11. BRAKE PROTECTION GUARDS REPLACEMENT

This task covers:

a. Removal **b. Installation**

INITIAL SETUP:

Tools
General mechanic's tool kit: automotive (Appendix B, Item 1)

Materials/Parts
Six locknuts (Appendix G, Item 106)

Manual References
TM 9-2320-387-24P

Equipment Condition
Vehicle raised and supported (para. 8-2).

Maintenance Level
Unit

NOTE

The replacement procedure for brake protection guards is basically the same for front and rear brakes. This procedure covers the front brake protection guards.

a. Removal

1. Remove four locknuts (4), washers (5), capscrews (7), washers (5), and two right-side brake protection guards (8) from brackets (6) on crossmembers (9). Discard locknuts (4).
2. Remove two locknuts (3), washers (2), capscrews (10), washers (2), and left-side brake protection guard (11) from brackets (1) on crossmembers (9). Discard locknuts (3).

b. Installation

1. Install left-side brake protection guard (11) on two brackets (1) on crossmembers (9) with two washers (2), capscrews (10), washers (2), and locknuts (3).
2. Install two right-side brake protection guards (8) on two brackets (6) on crossmembers (9) with four washers (5), capscrews (7), washers (5), and locknuts (4).

7-11. BRAKE PROTECTION GUARDS REPLACEMENT (Cont'd)

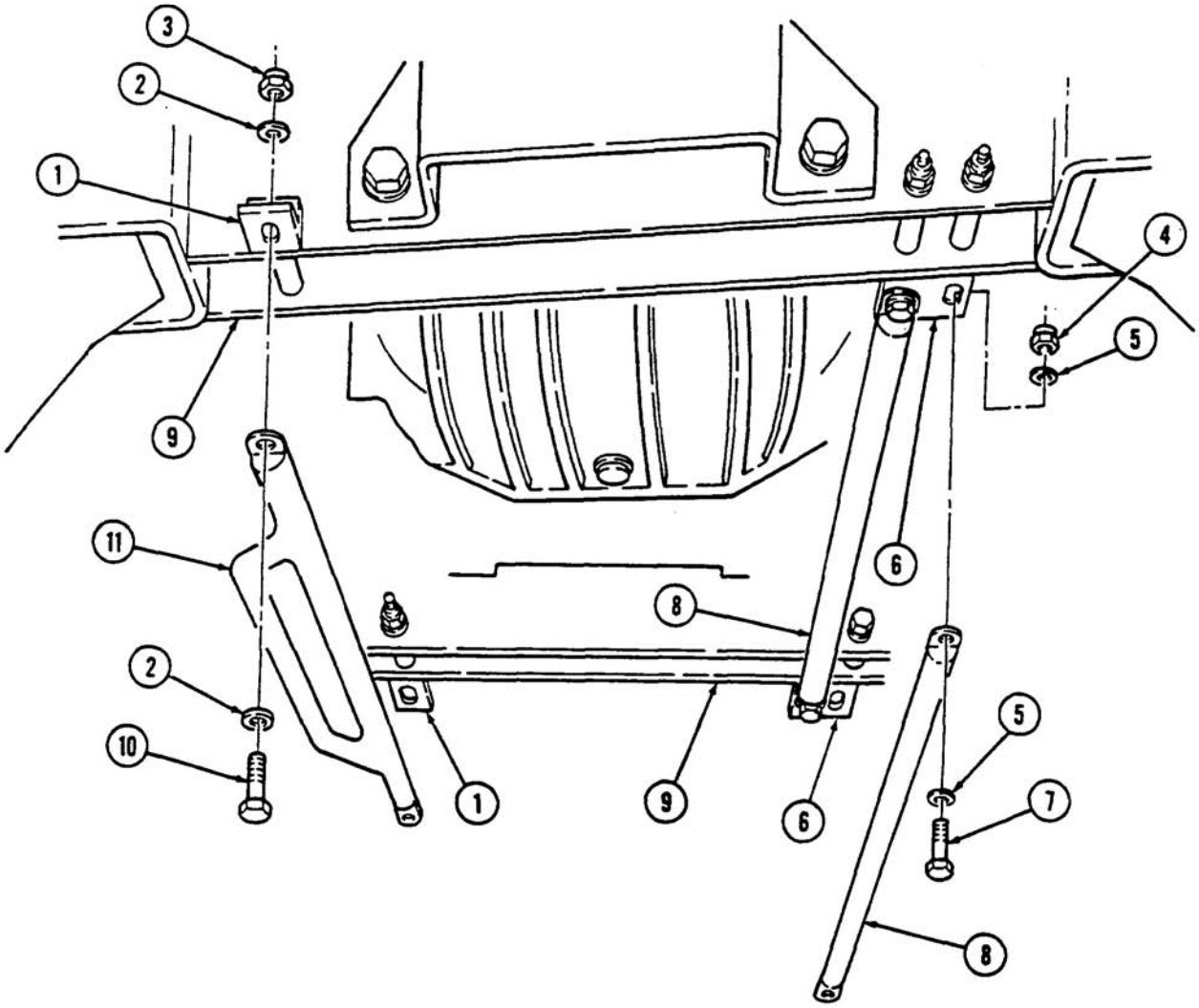

FOLLOW-ON TASK: Remove supports and lower vehicle (para. 8-2).

7-12. SERVICE BRAKE ROTOR REPLACEMENT

This task covers:

a. Removal **b. Installation**

INITIAL SETUP:

Tools
General mechanic's tool kit:
automotive (Appendix B, Item 1)
Maintenance and repair shop equipment:
automotive (Appendix B, Item 2)

Materials/Parts
Sealing compound (Appendix C, Item 63)
Six two-piece lockwashers
(Appendix G, Item 191)

Manual References
TM 9-2320-387-24P

Equipment Condition
Service brake caliper removed (para. 7-4).

Maintenance Level
Unit

a. Removal

1. Remove six capscrews (1) and two-piece lockwashers (2) from halfshaft (3), rotor (4), and output flange (5). Discard two-piece lockwashers (2).

NOTE

Clean excess sealant from output flange threaded holes with a 10 mm tap.

2. Disconnect halfshaft (3) and remove rotor (4) from output flange (5).

b. Installation

NOTE

- New capscrews come with preapplied thread-locking compound, however, still apply sealing compound to threads of new capscrews. If old capscrews are to be used, mating threads must be cleaned and sealing compound applied to threads of capscrews.
- Two-piece lockwashers must be installed in sets of two with serrated sawtooth threads facing each other.

1. Apply sealing compound to threads of six capscrews (1).
2. Install rotor (4) on output flange (5).
3. Install halfshaft (3) on rotor (4) with six two-piece lockwashers (2) and capscrews (1). Tighten capscrews (1) to 58 lb-ft (79 N·m).

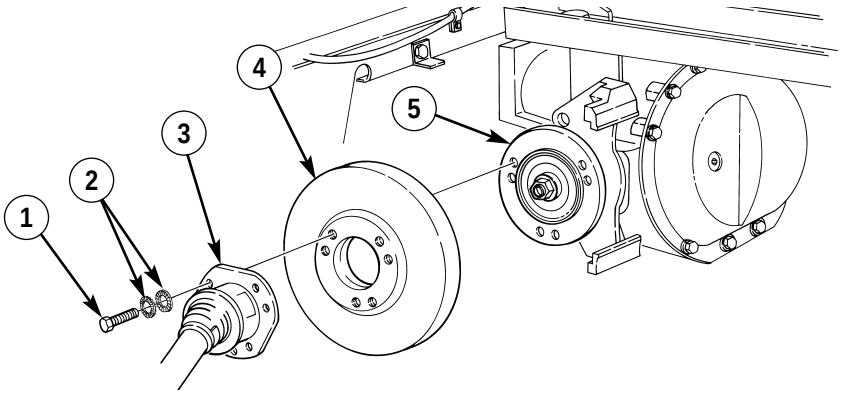

FOLLOW-ON TASK: Install service brake caliper (para. 7-4).

Section II. REAR DUAL SERVICE/PARKING BRAKE SYSTEM MAINTENANCE

7-13. REAR DUAL SERVICE/PARKING BRAKE SYSTEM MAINTENANCE TASK SUMMARY

TASK PARA.	PROCEDURES	PAGE NO.
7-14.	Rear Dual Service/Parking Brake Pad Maintenance	7-38
7-15.	Rear Dual Service/Parking Brake Caliper Maintenance	7-42
7-16.	Right Parking Brake Cable Replacement	7-46
7-17.	Left Parking Brake Cable/Mounting Bracket Replacement	7-48
7-18.	Rear Dual Service/Parking Brake Rod Replacement	7-52
7-19.	Rear Dual Service/Parking Brake Adjustment	7-54
7-20.	Parking Brake Lever Replacement	7-56

7-14. REAR DUAL SERVICE/PARKING BRAKE PAD MAINTENANCE

This task covers:

a. Removal
b. Cleaning and Inspection
c. Installation

INITIAL SETUP:

Tools

General mechanic's tool kit:
automotive (Appendix B, Item 1)
Maintenance and repair shop equipment:
automotive (Appendix B, Item 2)

Special Tools

Crowfoot, 14-mm (Appendix B, Item 141)

Materials/Parts

Clip (Appendix G, Item 11)
Cotter pin (Appendix G, Item 19)
Sealing compound (Appendix C, Item 63)
Grease (Appendix C, Item 34)

Manual References

TM 9-2320-387-10
TM 9-2320-387-24P

Equipment Condition

Wheels chocked and parking brake released (TM 9-2320-387-10).

General Safety Instructions

Ensure brake pads are installed with linings facing rotor.

Maintenance Level

Unit

a. Removal

1. Remove cotter pin (4), washer (5), and clevis pin (7) from parking brake clevis (6) and lever (3). Discard cotter pin (4).
2. Remove clip (2) and disconnect parking brake cable (8) from caliper cable bracket (1). Discard clip (2).

CAUTION

Caliper must be supported during removal to prevent damage to brake line.

3. Using crowfoot, remove two capscrews (12), washers (13), clamp (13.1), and pull yoke (14) and caliper (15) away from rotor (10).

NOTE

Note positioning of brake pad surfaces for installation.

4. Remove two brake pads (9) from adapter (11) and rotor (10).

7-14. REAR DUAL SERVICE/PARKING BRAKE PAD MAINTENANCE (Cont'd)

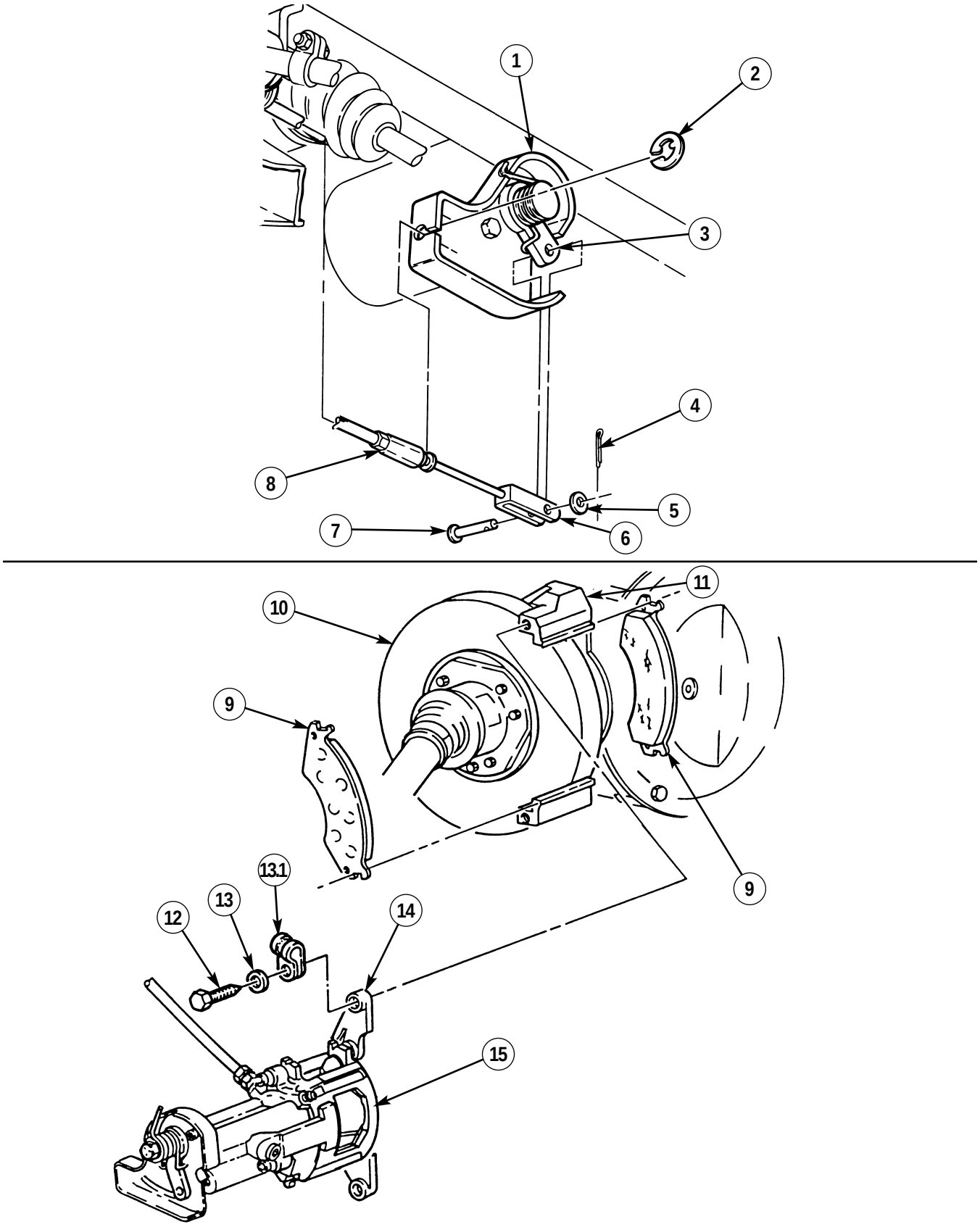

7-14. REAR DUAL SERVICE/PARKING BRAKE PAD MAINTENANCE (Cont'd)

b. Cleaning and Inspection

NOTE

Apply a light coat of grease on adapter slides.

1. Clean mating surfaces of caliper (1) and adapter (7) and lubricate adapter slides with grease.
2. Inspect caliper (1) and caliper piston (3) for cracks, pitting, or damage. Replace caliper assembly if cracked, pitted, or damaged (para. 7-15).
3. Inspect dust boot (4) for tears or deterioration. Replace caliper (1) if dust boot (4) is torn or deteriorated (para. 7-15).
4. Inspect caliper cable bracket (2) for looseness, damage, and rotation. If loose, damaged, or repositioned, replace caliper (1) (para. 7-15).
5. Thoroughly clean and inspect rotor (6) for heat cracks, discoloration, pitting, or scoring. Replace rotor (6) if cracked, pitted, or scored (para. 7-12).

CAUTION

Ensure grease and oil are not in contact with rotor and/or shoe and lining friction surface. Failure to do so will result in damage to equipment and poor performance.

NOTE

- Replace brake pads in sets on both sides of differential.
- Replace brake pads if thickness is less than 1/8 in. (3.2 mm) and operation in wet and muddy conditions is expected.

6. Inspect brake pads (5) for glazing, oil saturation, or wear. If glazed, oil saturated, or if brake pad thickness is less than 1/8 in. (3.2 mm), replace both pads (5) and pads on opposite caliper.

c. Installation

WARNING

Ensure brake pads are installed with linings facing rotor. Failure to do this may cause injury to personnel or damage to equipment.

1. Position two brake pads (5) facing rotor (6) in adapter (7).
2. Apply sealing compound to tapped holes of adapter (7).

CAUTION

Applying force to piston cap will result in piston cap damage.

3. Rotate caliper piston (3) in a clockwise direction and at the same time apply force on outer piston hex until caliper piston (3) is seated in piston bore.
4. Install caliper (1) and yoke (10) on adapter (7) and rotor (6) with clamp (9.1), two washers (9), and capscrews (8). Using crowfoot, tighten capscrews (8) to 30-40 lb-ft (41-54 N·m).
5. Install parking brake cable (18) on caliper cable bracket (11) with clip (12).

CAUTION

- Ensure lever is in contact with caliper cable bracket stop. Damage to equipment and poor performance will result if not aligned properly.
- Ensure clevis and clevis pin are aligned to lever. Do not move lever to accommodate a misadjusted clevis. Damage to equipment and poor performance will result.

6. Check position of lever (13) and ensure it is in contact with caliper cable stop bracket (19). Install parking brake clevis (16) on lever (13) with clevis pin (17), washer (15), and cotter pin (14).

7-14. REAR DUAL SERVICE/PARKING BRAKE PAD MAINTENANCE (Cont'd)

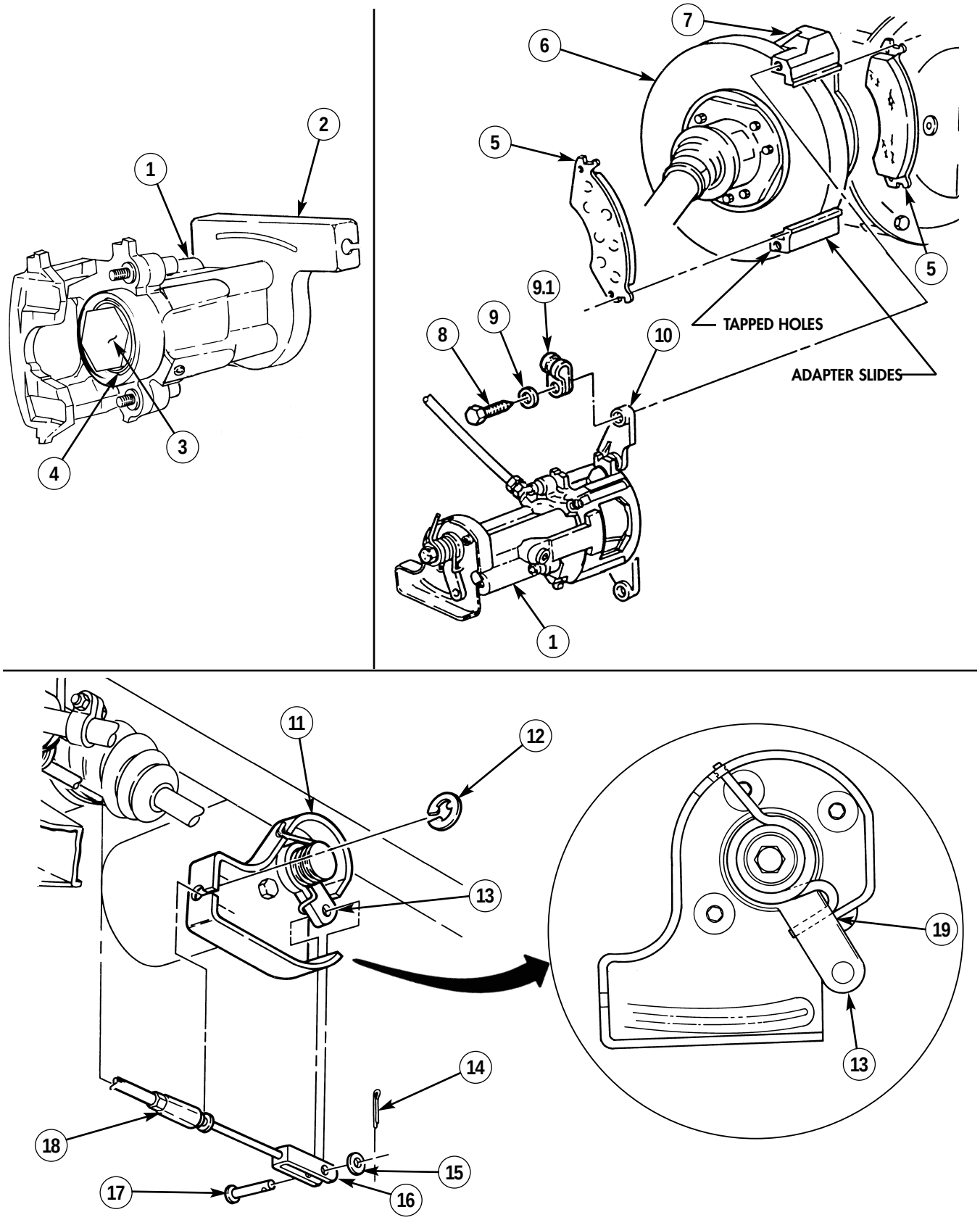

FOLLOW-ON TASK: Adjust rear dual service/parking brake (para. 7-19).

7-15. REAR DUAL SERVICE/PARKING BRAKE CALIPER MAINTENANCE

This task covers:

a. Removal
b. Cleaning and Inspection
c. Installation

INITIAL SETUP:

Tools
General mechanic's tool kit:
automotive (Appendix B, Item 1)
Maintenance and repair shop equipment:
automotive (Appendix B, Item 2)

Special Tools
Crowfoot, 14-mm (Appendix B, Item 141)
Hex-head driver, 7-mm
(Appendix B, Item 151)

Materials/Parts
Cotter pin (Appendix G, Item 19)
Copper washer (Appendix G, Item 14)
Clip (Appendix G, Item 11)
Sealing compound (Appendix C, Item 63)

Manual References
TM 9-2320-387-10
TM 9-2320-387-24P

Equipment Condition
Wheels chocked and parking brake released (TM 9-2320-387-10).

Maintenance Level
Unit

a. Removal

CAUTION

Cover or plug all open lines and connections immediately after disconnection to prevent contamination. Remove all plugs prior to connection.

1. Remove cotter pin (4), washer (5), and clevis pin (7) from parking brake clevis (6) and lever (3). Discard cotter pin (4).
2. Remove clip (2) and disconnect parking brake cable (8) from caliper cable bracket (1). Discard clip (2).

NOTE

Have drainage container ready to catch brake fluid.

3. Disconnect brake line (17) from coupling (16).
4. Remove coupling (16) and copper washer (15) from caliper (14). Discard copper washer (15).
5. Using crawfoot, remove two capscrews (10), washers (11), clamp (11.1), and pull yoke (12) and caliper (14) away from adapter (9).
6. Slide yoke (12) and locating pins (13) out from caliper (14).

7-15. REAR DUAL SERVICE/PARKING BRAKE CALIPER MAINTENANCE (Cont'd)

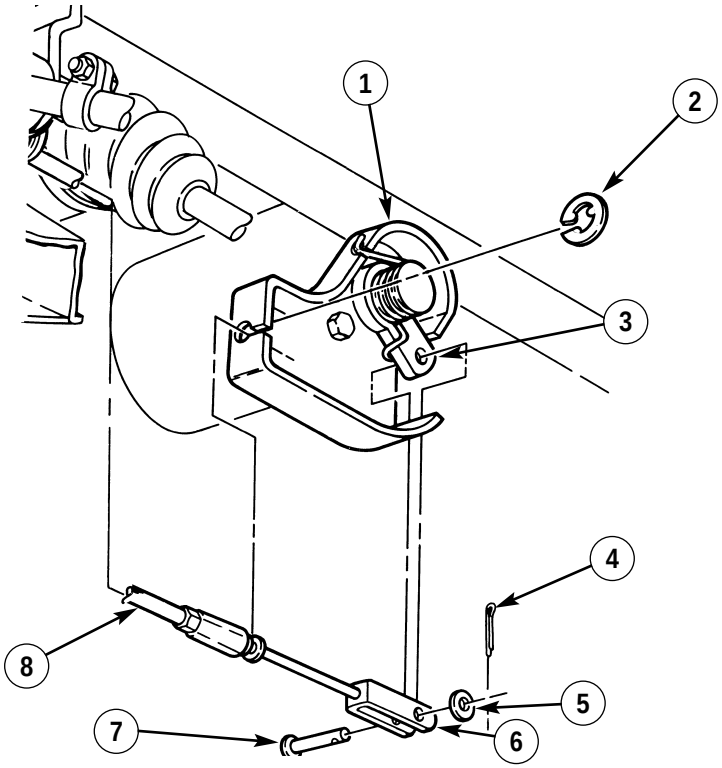

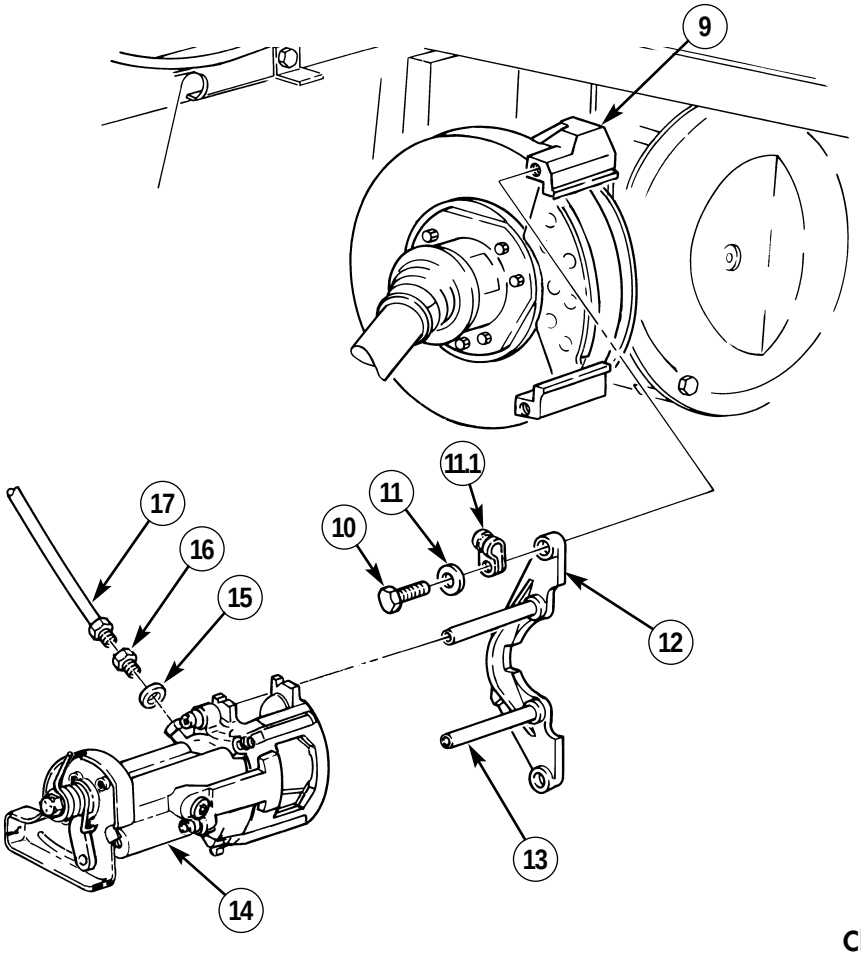

7-15. REAR DUAL SERVICE/PARKING BRAKE CALIPER MAINTENANCE (Cont'd)

b. Cleaning and Inspection

NOTE

Apply a light coat of grease on adapter slides.

1. Clean mating surfaces of caliper (1) and adapter (7) and lubricate adapter slides with grease.
2. Clean cooling fins of rotor (6).
3. Inspect caliper (1) and caliper piston (4) for cracks, pitting, or damage. Replace caliper (1) if cracked, pitted, or damaged.
4. Inspect caliper cable bracket (2) for looseness, damage, and rotation. If loose, damaged, or repositioned, replace caliper (1).
5. Inspect dust boot (5) for tears or deterioration. Replace caliper (1) if dust boot (5) is torn or deteriorated.
6. Inspect rotor (6) for heat cracks, discoloration, pitting, or damage. Replace rotor (6) if cracked, pitted, or scored (para. 7-12).
7. Inspect yoke locating pins (12) for cracks or corrosion. Perform step 8 if cracked or corroded. If not, perform step 9.
8. Using 7-mm hex-head driver, remove locating pins (12) from yoke (11). Discard locating pins (12).

NOTE

- Replace brake pads in sets on both sides of differential.
- Replace brake pads if thickness is less than 1/8 in. (3.2 mm) and operation in wet and muddy conditions is expected.

9. Inspect brake pads (8) for glazing, oil saturation, or wear. If glazed, oil saturated, or if brake pad thickness is less than 1/8 in. (3.2 mm), replace both pads (8) and pads on opposite caliper (para. 7-14).

c. Installation

CAUTION

Ensure grease and oil are not in contact with rotor and/or brake pad friction surface. Failure to do so will result in damage to equipment and poor performance.

1. Open bleeder valve (3) and depress piston (4) into caliper (1) while rotating piston (4) in a clockwise direction and, at the same time, apply pressure until piston (4) is seated in piston bore.

NOTE

Perform step 2 only if yoke locating pins were removed.

2. Apply sealing compound to threads of locating pins (12) and install locating pins (12) in yoke (11) using 7-mm hex-head driver. Tighten locating pins (12) to 25-35 lb-ft (34-47 N·m).
3. Slide yoke (11) and two locating pins (12) into caliper (1).
4. Apply sealing compound to tapped holes of adapter (7).
5. Install caliper (1) and yoke (11) on adapter (7) with clamp (10.1), two washers (10), and capscrews (9). Using crowfoot, tighten capscrews (9) to 30-40 lb-ft (41-54 N·m).
6. Install copper washer (13) and coupling (14) on caliper (1) and connect brake line (15) to coupling (14).
7. Install parking brake cable (23) on caliper cable bracket (16) with clip (17).

CAUTION

- Ensure lever is in contact with caliper cable bracket stop. Damage to equipment and poor performance will result if not aligned properly.
- Ensure clevis and clevis pin are aligned to lever. Do not move lever to accommodate a misadjusted clevis, or damage to equipment and poor performance will result.

8. Check position of lever (18) and ensure it is in contact with caliper cable bracket stop (24).
9. Install parking brake clevis (21) on lever (18) with clevis pin (22), washer (20), and cotter pin (19).

7-15. REAR DUAL SERVICE/PARKING BRAKE CALIPER MAINTENANCE (Cont'd)

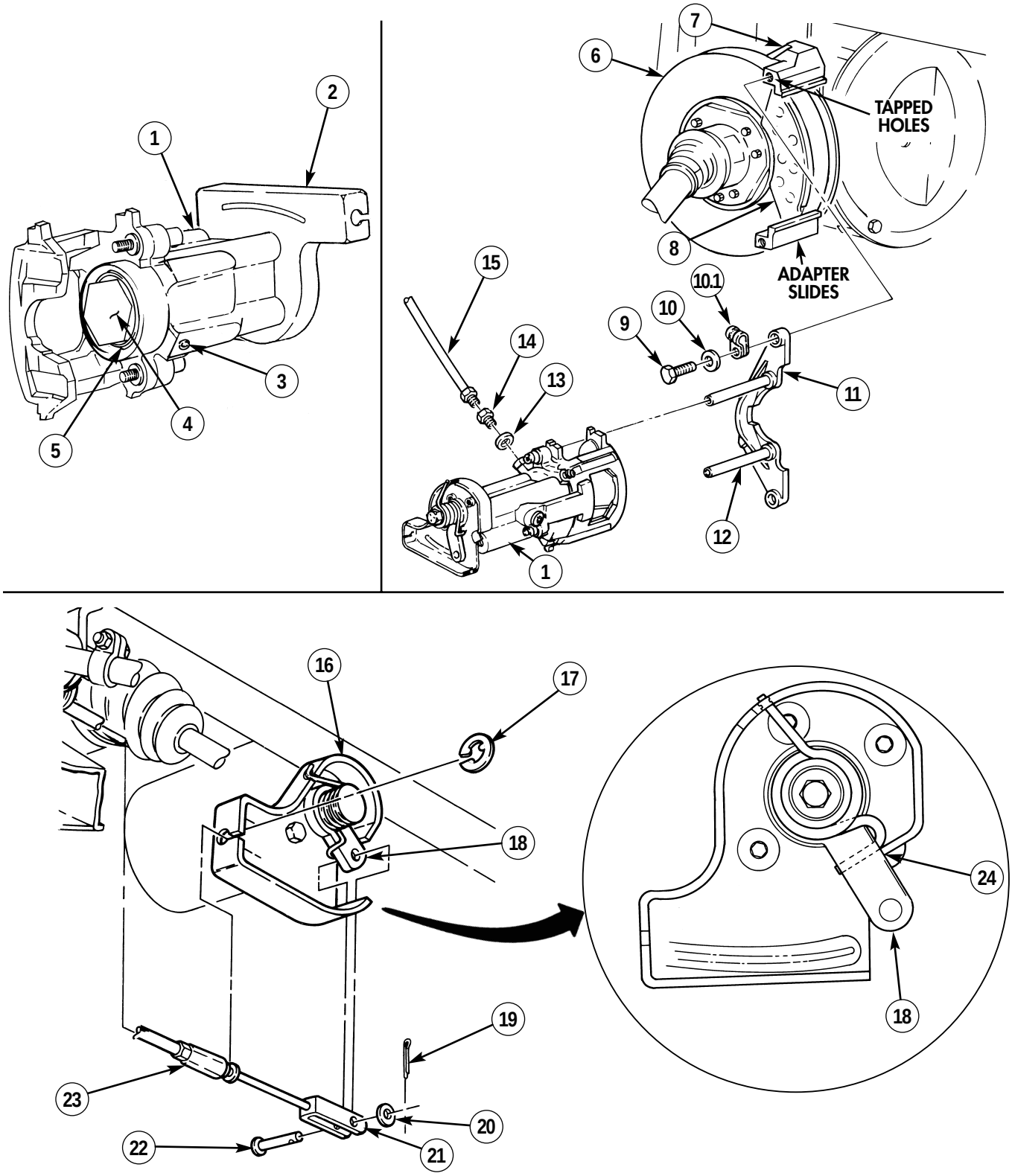

FOLLOW-ON TASKS: • Bleed brake system (para. 7-2).
• Adjust rear dual service/parking brake (para. 7-19).

7-16. RIGHT PARKING BRAKE CABLE REPLACEMENT

This task covers:

a. Removal **b. Installation**

INITIAL SETUP:

Tools

General mechanic's tool kit:
automotive (Appendix B, Item 1)
Maintenance and repair shop equipment:
automotve (Appendix B, Item 2)

Materials/Parts

Cotter pin (Appendix G, Item 19)
Two lockwashers (Appendix G, Item 146)
Two clips (Appendix G, Item 11)
Two locknuts (Appendix G, Item 133)

Manual References

TM 9-2320-387-10
TM 9-2320-387-24P

Equipment Condition

- Muffler and catalytic converter removed (para. 3-49).
- Wheels chocked and parking brake released (TM 9-2320-387-10).

Maintenance Level

Unit

a. Removal

1. Remove cotter pin (29), washer (28), clevis pin (26), and brake clevis (27) from rear caliper lever (30). Discard cotter pin (29).
2. Remove brake cable clip (1) and parking brake cable sleeve (25) from rear caliper cable bracket (2) and remove cable assembly (4) from caliper cable bracket (2). Discard cable clip (1).
3. Remove parking brake cable clip (7) from parking brake cable sleeve (6) and C-beam (9). Disconnect parking brake cable (4) from parking brake equalizer bar (8). Discard cable clip (7).
4. Remove two capscrews (12), parking brake cable clamps (5), and parking brake cable assembly (4) from body (11).
5. Remove locknut (15), capscrew (17), lockwasher (16), and parking brake cable clamp (18) from clamp bracket (22). Discard lockwasher (16) and locknut (15).
6. Remove capscrew (19), lockwasher (20), and parking brake cable clamp (21) from bracket (22). Discard lockwasher (20).

NOTE

Perform step 7 if replacing clamp bracket.

7. Remove locknut (24), washer (23), capscrew (13), washer (14), and clamp bracket (22) from support bracket (3). Discard locknut (24).

b. Installation

NOTE

Perform step 1 if clamp bracket was removed.

1. Install clamp bracket (22) on support bracket (3) with washer (14), capscrew (13), washer (23), and locknut (24).
2. Slide parking brake cable clamp (21) onto parking brake cable assembly (4) and install on clamp bracket (22) with lockwasher (20) and capscrew (19).
3. Slide parking brake cable clamp (18) on parking brake cable assembly (4) and install on clamp bracket (22) with capscrew (17), lockwasher (16), and locknut (15).
4. Install two parking brake cable clamps (5) on parking brake cable assembly (4) and body (11) with capscrews (12).
5. Install parking brake cable sleeve (6) on C-beam (9) and parking brake cable (10) to parking brake equalizer bar (8) with parking brake cable clip (7).

7-16. RIGHT PARKING BRAKE CABLE REPLACEMENT (Cont'd)

CAUTION

Ensure caliper cable bracket is secure with no signs of looseness and lever is in contact with caliper cable bracket stop. Damage to equipment and poor performance will result if not aligned properly.

6. Install parking brake cable sleeve (25) on rear caliper cable bracket (2) with brake cable clip (1).
7. Install brake clevis (27) on rear caliper lever (30) with clevis pin (26), washer (28), and cotter pin (29).

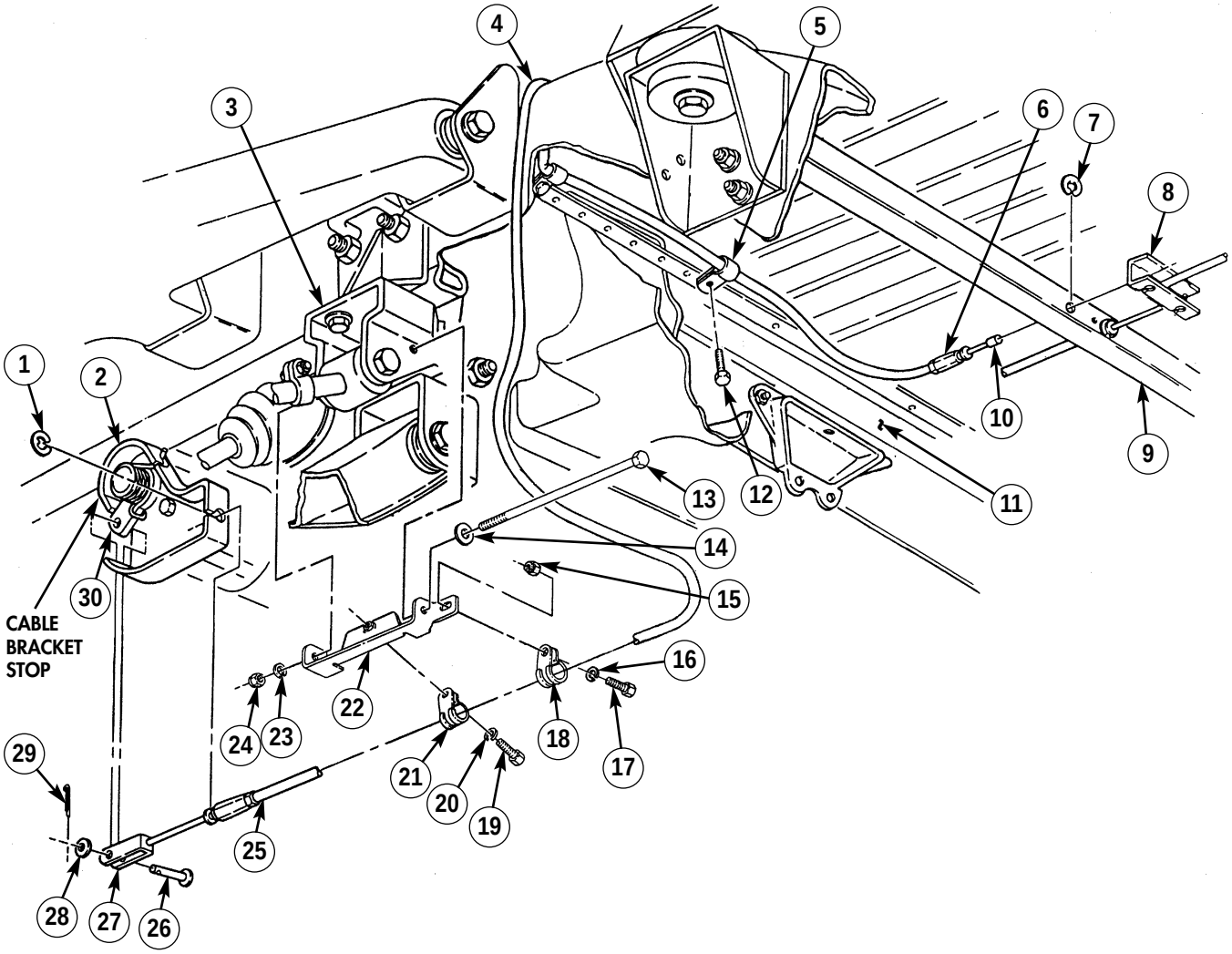

FOLLOW-ON TASKS: • Adjust parking brake lever (TM 9-2320-387-10).
• Install muffler and catalytic converter (para. 3-49).

7-17. LEFT PARKING BRAKE CABLE/MOUNTING BRACKET REPLACEMENT

This task covers:

a. Removal **b. Installation**

INITIAL SETUP:

Tools

General mechanic's tool kit:
automotive (Appendix B, Item 1)

Materials/Parts

Assembled locknut (Appendix G, Item 134)
Two lockwashers (Appendix G, Item 146)
Cotter pin (Appendix G, Item 19)
Two clips (Appendix G, Item 11)
Two locknuts (Appendix G, Item 133)
Two locknuts (Appendix G, Item 106)

Manual References

TM 9-2320-387-10
TM 9-2320-387-24P

Equipment Condition

- Wheels chocked and parking brake released (TM 9-2320-387-10).
- Muffler and catalytic converter removed (para. 3-49).

Maintenance Level

Unit

a. Removal

1. Remove cotter pin (11), washer (12), clevis pin (14), and brake clevis (13) from rear caliper lever (10). Discard cotter pin (11).
2. Remove brake cable clip (9) and parking brake cable sleeve (2) from rear caliper cable bracket (8). Discard cable clip (9).
3. Remove parking brake cable clip (23) and parking brake cable sleeve (2) from C-beam (24). Disconnect parking brake cable (1) from parking brake equalizer bar (22). Discard cable clip (23).
4. Remove assembled locknut (3), capscrew (6), washer (4), and brake cable clamp (5) from mounting bracket (25) and parking brake cable assembly (15). Discard assembled locknut (3).
5. Remove locknut (21), capscrew (28), lockwasher (29), and parking brake cable clamp (19) from bracket (30). Discard lockwasher (29) and locknut (21).
6. Remove capscrew (18), lockwasher (17), and parking brake cable clamp (16) from bracket (30). Discard lockwasher (17).

NOTE

Perform step 7 if replacing clamp bracket.

7. Remove locknut (32), washer (31), capscrew (27), washer (26), and clamp bracket (30) from support bracket (7). Discard locknut (32).

NOTE

Perform step 8 if replacing parking cable mounting bracket.

8. Remove two locknuts (33), washers (35), capscrews (36), washers (35), mounting bracket (25), and tailpipe hanger (37) from rear body mount (38). Discard locknuts (33).

7-17. LEFT PARKING BRAKE CABLE/MOUNTING BRACKET REPLACEMENT (Cont'd)

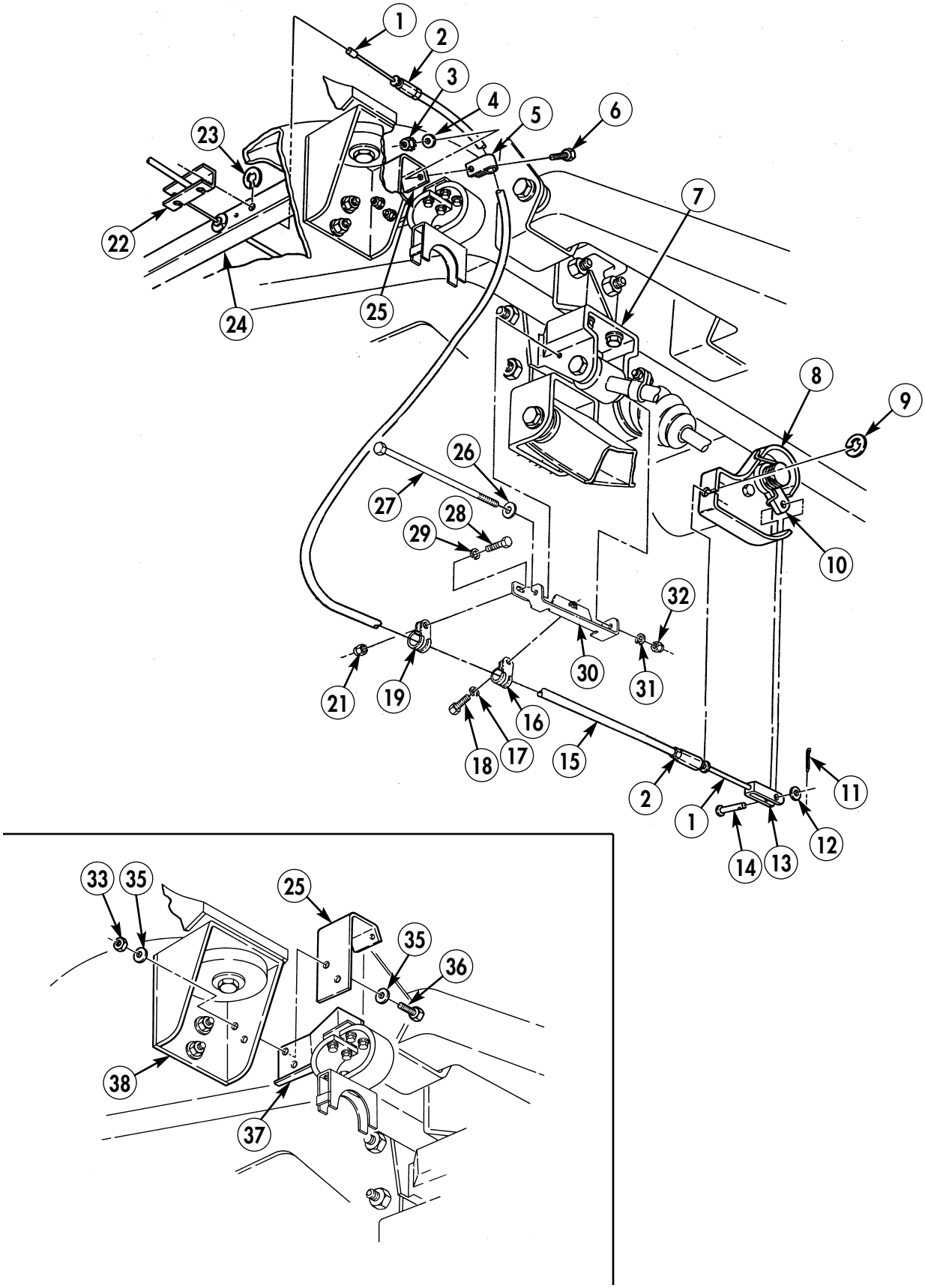

7-17. LEFT PARKING BRAKE CABLE/MOUNTING BRACKET REPLACEMENT (Cont'd)

b. Installation

NOTE

Perform step 1 if parking brake cable mounting bracket was removed.

1. Install parking brake cable mounting bracket (4) and tailpipe hanger (6) on rear body mount (7) with two washers (3), capscrews (5), washers (3), and locknuts (1).

NOTE

Perform step 2 if clamp bracket was removed.

2. Install clamp bracket (35) on support bracket (14) with washer (32), capscrew (37), washer (34), and locknut (33).
3. Slide parking brake cable clamp (23) onto parking bracket cable assembly (22) and install on clamp bracket (35) with lockwasher (24) and capscrew (25).
4. Slide parking brake cable clamp (26) onto parking brake cable assembly (22) and install on clamp bracket (35) with lockwasher (36), capscrew (38), and locknut (28).
5. Install parking brake cable clamp (12) on parking brake cable assembly (22) and parking brake cable mounting bracket (4) with capscrew (13), washer (11), and assembled locknut (10).
6. Install parking brake cable sleeve (9) on C-beam (29) and parking brake cable (8) on equalizer bar (30) with parking brake cable clip (31).

CAUTION

Ensure caliper cable bracket is secure with no signs of looseness and lever is in contact with the caliper cable bracket stop. Damage to equipment and poor performance will result if not aligned properly.

7. Install parking brake cable sleeve (9) on rear caliper cable bracket (15) with brake cable clip (16).
8. Install brake clevis (20) on rear caliper lever (17) with clevis pin (21), washer (19), and cotter pin (18).

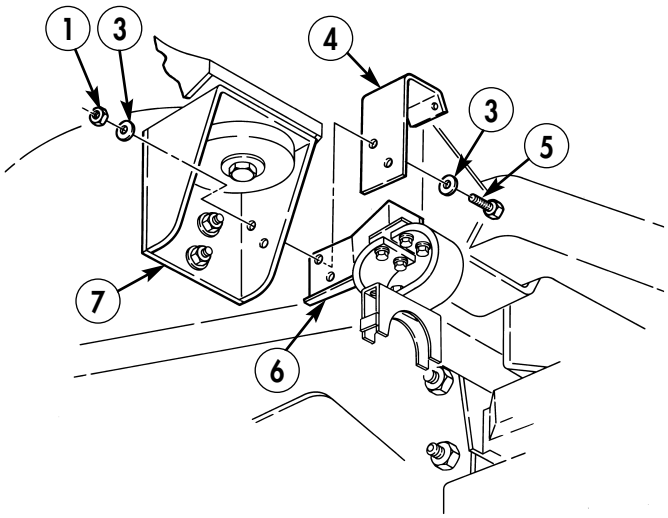

7-17. LEFT PARKING BRAKE CABLE/MOUNTING BRACKET REPLACEMENT (Cont'd)

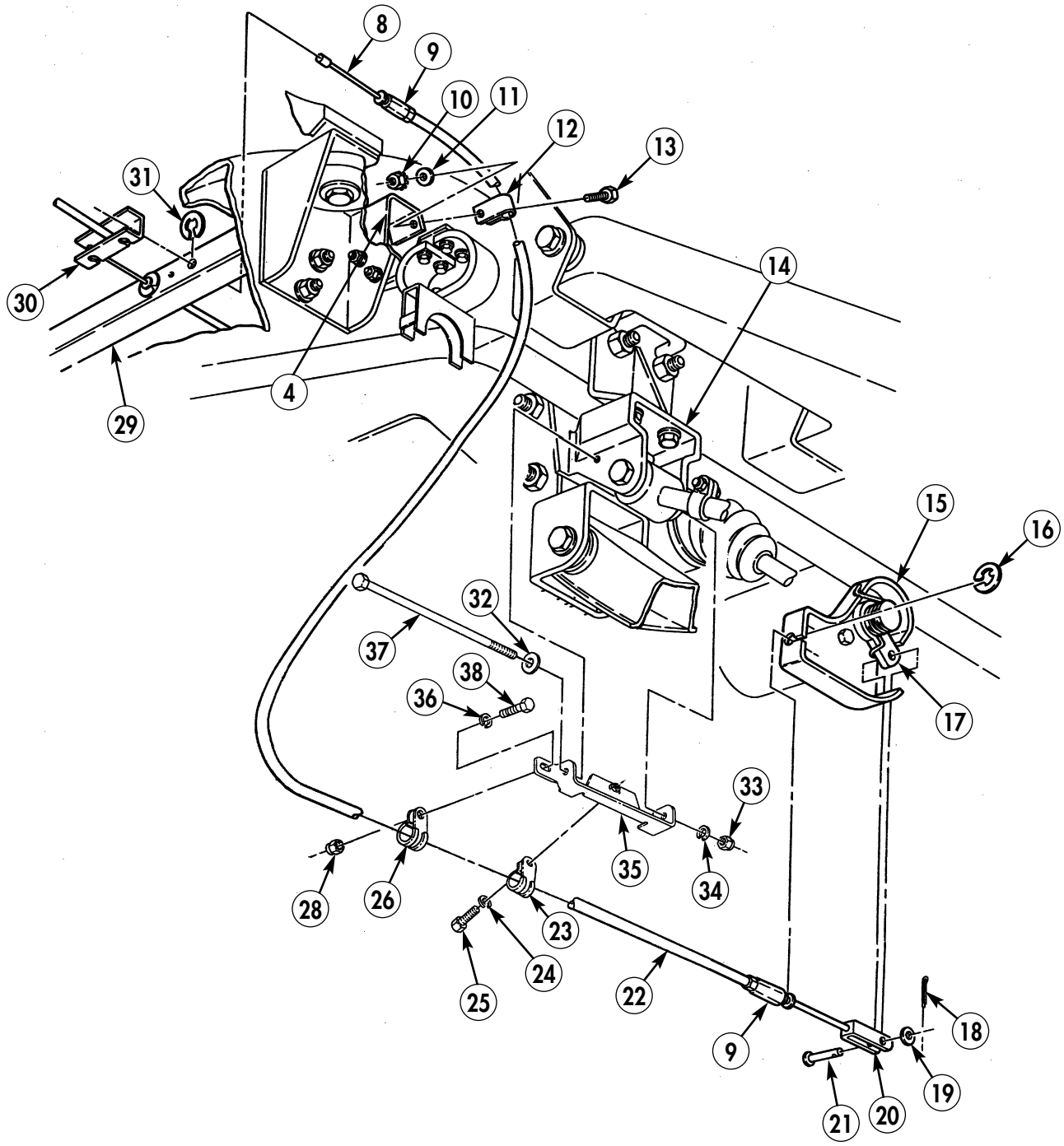

FOLLOW-ON TASKS: • Adjust parking brake lever (TM 9-2320-387-10).
• Install muffler and catalytic converter (para. 3-49).

7-18. REAR DUAL SERVICE/PARKING BRAKE ROD REPLACEMENT

This task covers:

a. Removal **b. Installation**

INITIAL SETUP:

Tools
General mechanic's tool kit:
automotive (Appendix B, Item 1)

Materials/Parts
Three cotter pins (Appendix G, Item 19)
Locknut (Appendix G, Item 82)
Locknut (Appendix G, Item 87)

Manual References
TM 9-2320-387-10
TM 9-2320-387-24P

Equipment Condition
- Muffler and catalytic converter removed (para. 3-49).
- Wheels chocked and parking brake released (TM 9-2320-387-10).

Maintenance Level
Unit

a. Removal

1. Remove two cotter pins (left and right) (23), washers (22), clevis pins (20), and brake clevises (21) from caliper levers (24). Discard cotter pins (23).
2. Remove clip (5) and spread boot (6) to allow access to cotter pin (12).
3. Remove cotter pin (12), washer (11), clevis pin (8), and clevis (9) from brake rod (14) and bellcrank (7). Discard cotter pin (12).
4. Remove locknut (17), washer (16), spacer (15), washer (3), capscrew (4), and spring (2) from body (13). Discard locknut (17).
5. Remove locknut (19) and convex washer (18) from brake rod (14) and brake cable equalizer bar (1). Discard locknut (19).
6. Remove brake rod (14) from brake cable equalizer bar (1) by sliding brake rod (14) forward.
7. Remove clevis (9) and nut (10) from brake rod (14).
8. Remove brake rod insulator (17.1) from brake rod (14).

b. Installation

1. Install brake rod insulator (17.1) on brake rod (14).

1.1 Install spring (2) and spacer (15) on body (13) with washer (3), capscrew (4), washer (16), and locknut (17).

2. Install nut (10) and clevis (9) on brake rod (14).
3. Slide brake rod (14) rearward through spring (2).
4. Install brake rod (14) on brake cable equalizer bar (1) with convex washer (18) and locknut (19). Tighten locknut (19) far enough to expose 3 to 5 threads on end of brake rod (14).
5. Spread boot (6) and install clevis (9) on bellcrank (7) with clevis pin (8), washer (11), and cotter pin (12).
6. Install clip (5) on boot (6).

CAUTION

Ensure caliper cable bracket is secure with no signs of looseness and lever is in contact with caliper cable bracket stop. Damage to equipment and poor performance will result if not aligned properly.

7. Install two brake clevises (21) on rear caliper levers (24) with clevis pins (20), washers (22), and cotter pins (23).

7-18. REAR DUAL SERVICE/PARKING BRAKE ROD REPLACEMENT (Cont'd)

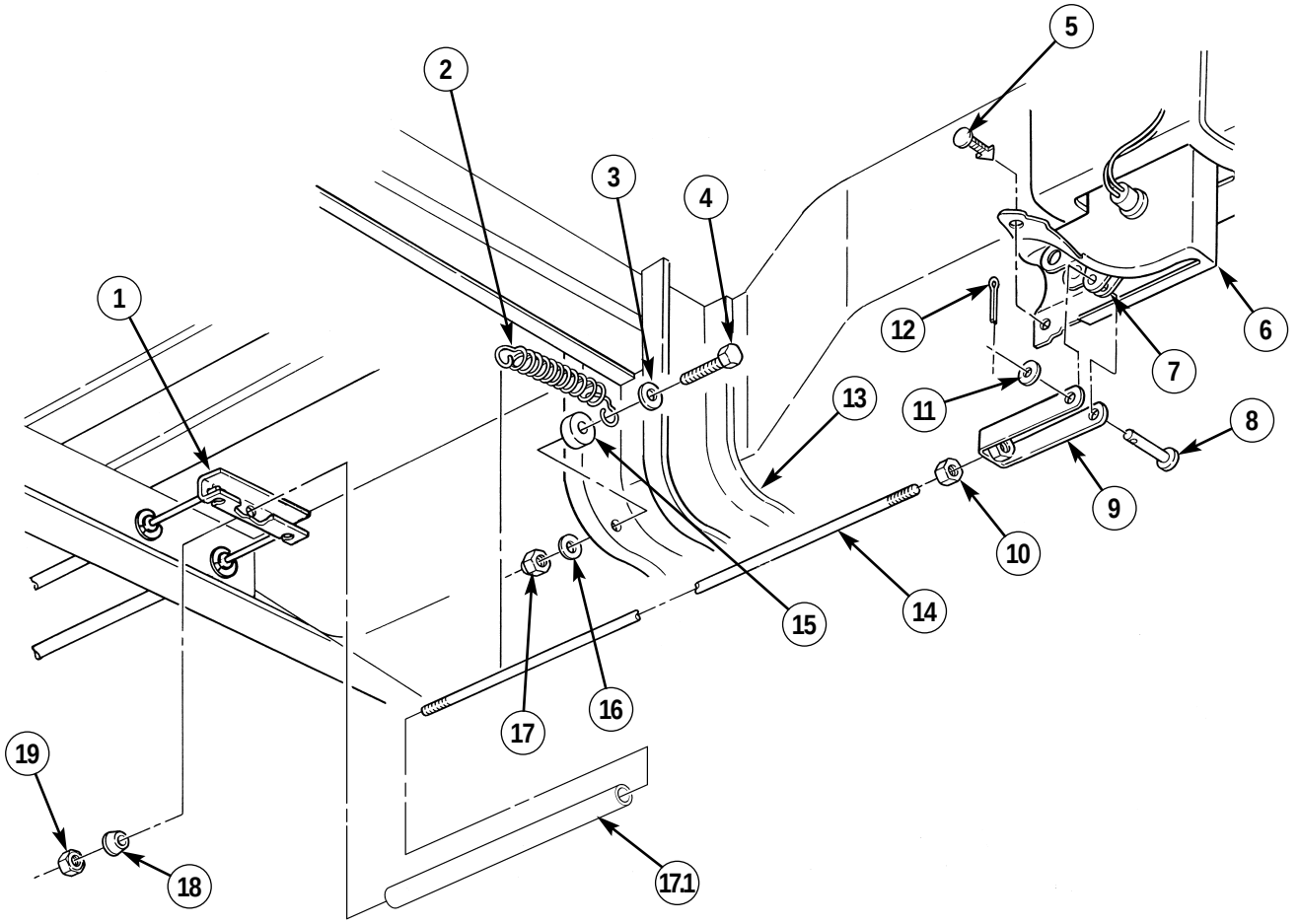

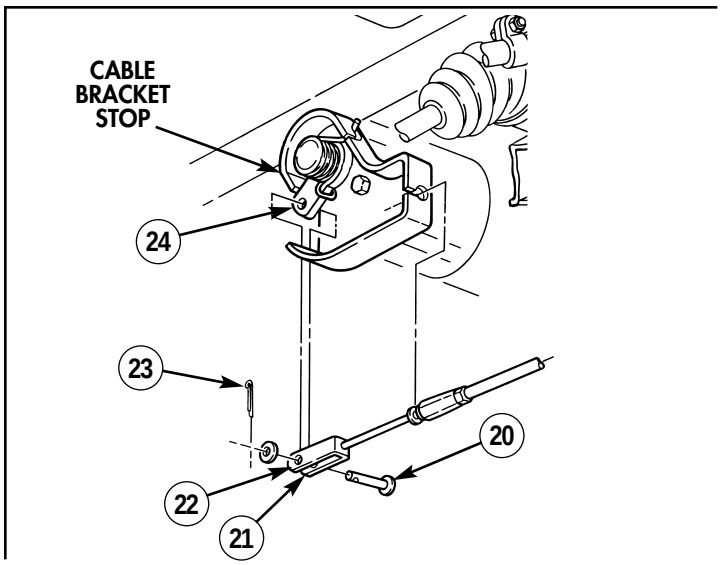

FOLLOW-ON TASKS: • Adjust rear dual service/parking brake (para. 7-19).
• Install muffler and catalytic converter (para. 3-49).

7-19. REAR DUAL SERVICE/PARKING BRAKE ADJUSTMENT

This task covers:

Adjustment

INITIAL SETUP:

Tools

General mechanic's tool kit:
automotive (Appendix B, Item 1)
Maintenance and repair shop equipment:
automotive (Appendix B, Item 2)

Materials/Parts

Cotter pin (Appendix G, Item 19)

Personnel Required

One mechanic
One assistant

Manual References

TM 9-2320-387-10
TM 9-2320-387-24P

Equipment Condition

Wheels chocked and parking brake released (TM 9-2320-387-10).

Maintenance Level

Unit

NOTE

The Kelsey-Hayes parking brake mechanism has an automatic adjusting feature and does not require periodic manual adjustment. When parking brake components or rear brake pads are replaced, the parking brake linkage must be initially positioned to ensure proper parking brake system operation. The only additional adjustment necessary is accomplished with parking brake hand lever. Refer to TM 9-2320-387-10.

Adjustment

1. Remove clip (1) and spread boot (2) to allow access to cotter pin (9).
2. Remove cotter pin (9), washer (8), and clevis pin (4) from clevis (5) and bellcrank (3). Discard cotter pin (9).
3. Repeatedly apply and adjust parking brake hand lever until bellcrank (3) linear travel is 0.75 in. (19 mm).

CAUTION

Holes in parking brake clevis must align to holes in adjusting bellcrank without force for proper parking brake adjustment. Failure to do this may result in damage to equipment and poor performance.

4. Release parking brake. Loosen nut (6) and adjust clevis (5) so holes in clevis (5) align to holes in bellcrank (3). Install clevis (5) on bellcrank (3) with clevis pin (4), washer (8), and cotter pin (9).

CAUTION

Do not overtighten brake rod. Overtightening brake rod may result in dragging brakes.

5. If necessary, remove excess slack in parking brake cables by turning parking brake rod (7) clockwise or counterclockwise into clevis (5).

7-19. REAR DUAL SERVICE/PARKING BRAKE ADJUSTMENT (Cont'd)

CAUTION

Ensure caliper cable bracket is secure with no signs of looseness and lever is in contact with caliper cable bracket stop. Damage to equipment and poor performance will result if not aligned properly.

NOTE

Perform step 6 on both sides.

6. Parking brake rod (7) is properly adjusted if lever (11) is in contact with caliper cable bracket stop (10).
7. Tighten nut (6) against clevis (5).
8. Install clip (1) in boot (2).

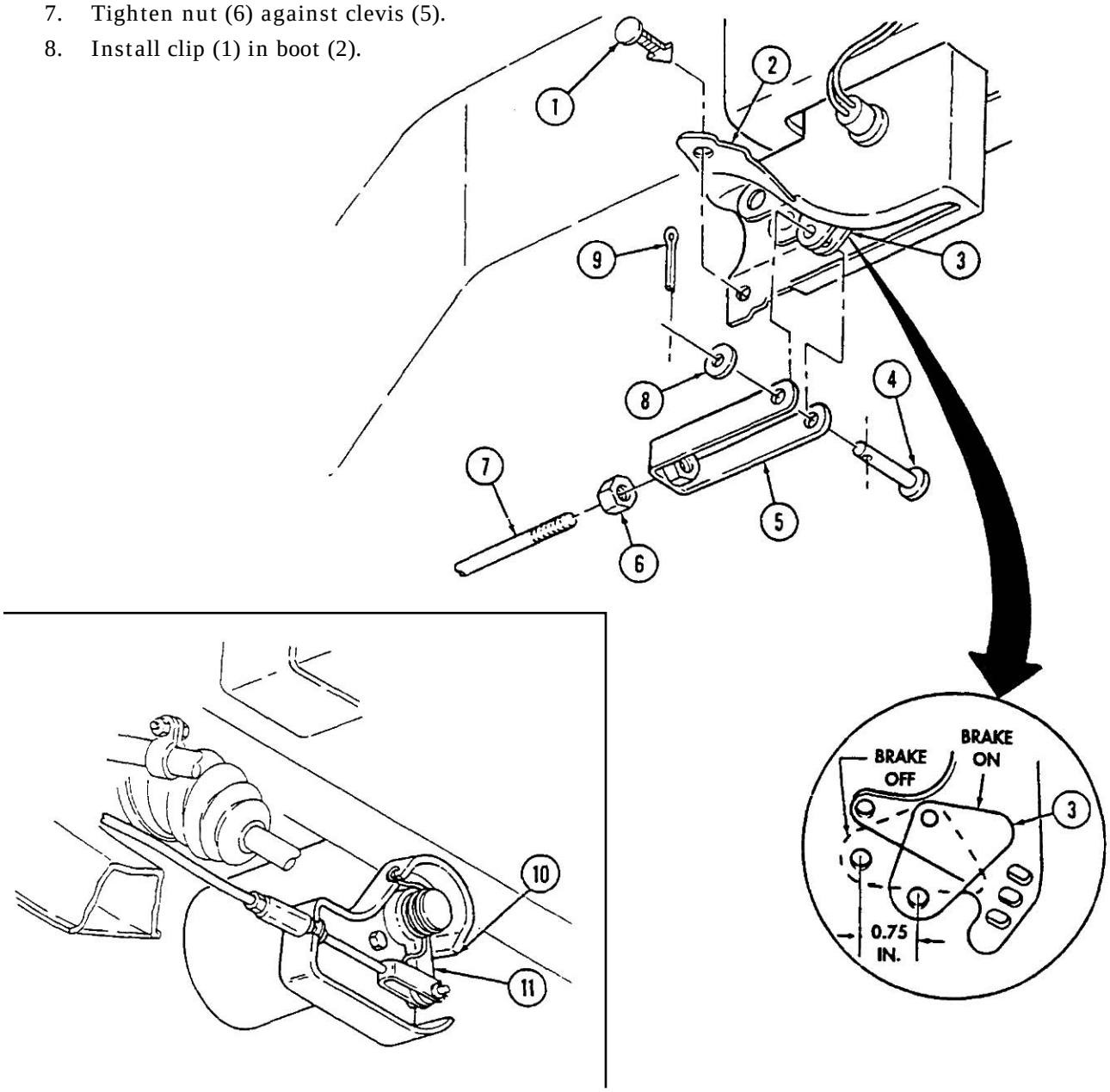

FOLLOW-ON TASK: Adjust parking brake lever (TM 9-2320-387-10).

7-20. PARKING BRAKE LEVER REPLACEMENT

This task covers:

a. Removal **b. Installation**

INITIAL SETUP:

Tools

General mechanic's tool kit: automotive (Appendix B, Item 1)
Maintenance repair shop equipment: automotive (Appendix B, Item 2)

Materials/Parts

Two nut and lockwasher assemblies (Appendix G, Item 194)
Five locknuts (Appendix G, Item 77)
Cotter pin (Appendix G, Item 19)

Personnel Required

One mechanic
One assistant

Manual References

TM-9-2320-387-10
TM 9-2320-387-24P

Equipment Condition

- Wheels chocked and parking brake released (TM 9-2320-387-10).
- Parking brake switch removed (para. 4-23).

Maintenance Level

Unit

a. Removal

1. Remove clip (1) and open boot (2) to allow access to clevis pin (4).
2. Remove cotter pin (7), washer (6), and clevis pin (4) from clevis (5) and bellcrank (3). Discard cotter pin (7).
3. Remove nut and lockwasher assembly (9), wiring harness clamp (10), nut and lockwasher assembly (9), and capscrew (19) from parking brake lever (8). Discard nut and lockwasher assemblies (9).
4. Remove three locknuts (11), washers (12), and capscrews (17) from parking brake lever (8) and body (20). Discard locknuts (11).
5. Remove two locknuts (16), washers (15), capscrews (13), washers (14), and parking brake lever (8) from body (20). Discard locknuts (16).
6. Remove upper boot (18) from parking brake lever (8).
7. Remove lower boot (2) from body (20).

b. Installation

1. Install lower boot (2) on body (20).
2. Install upper boot (18) on parking brake lever (8).
3. Install parking brake lever (8) on body (20) with two washers (14), capscrews (13), washers (15), and locknuts (16).
4. Install capscrew (19), nut and lockwasher assembly (9), wiring harness clamp (10), and nut and lockwasher assembly (9) on parking brake lever (8).
5. Secure parking brake lever (8) on body (20) with three capscrews (17), washers (12), and locknuts (11).
6. Install clevis (5) on bellcrank (3) with clevis pin (4), washer (6), and cotter pin (7).
7. Apply parking brake lever (8) and tighten capscrews (13), (17), and (19) to 8 lb-ft (11 N·m).
8. Close boot (2) and install clip (1).

7-20. PARKING BRAKE LEVER REPLACEMENT (Cont'd)

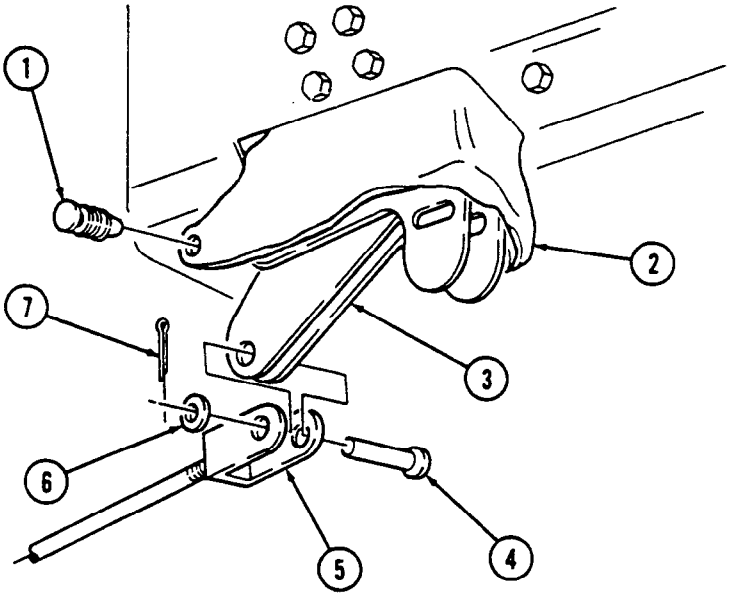

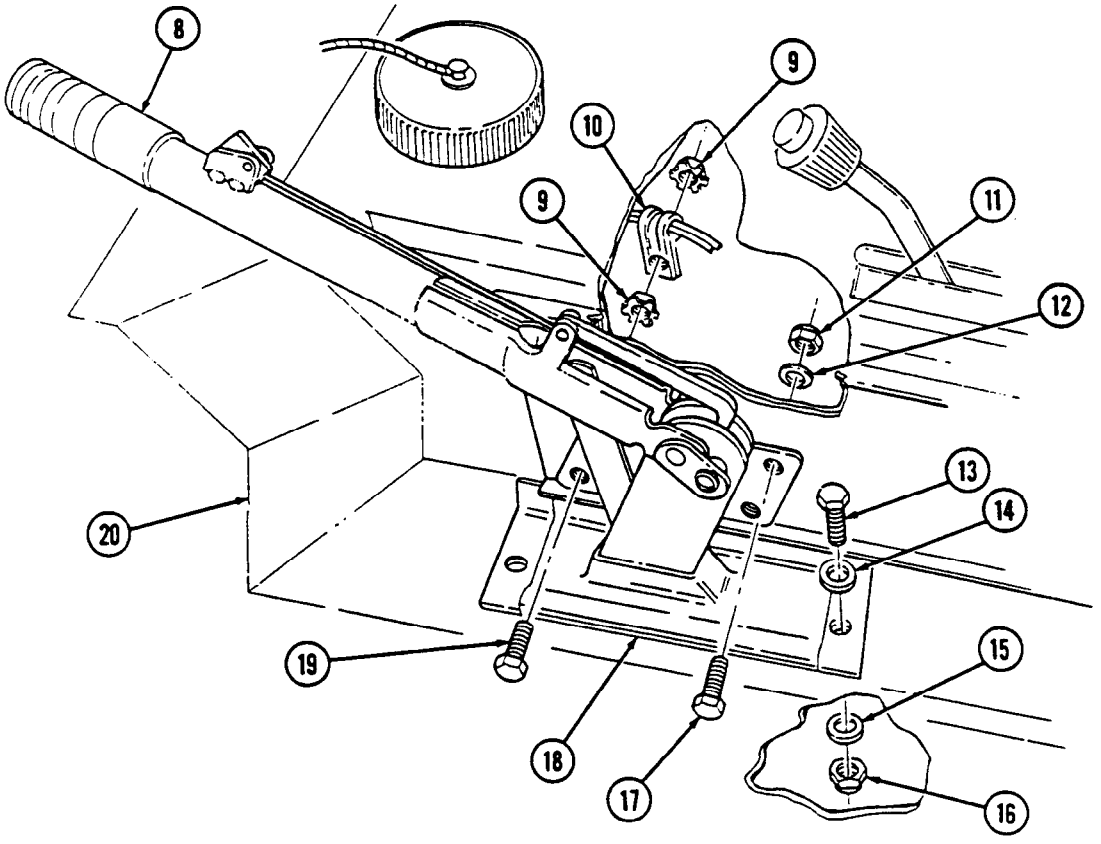

FOLLOW-ON TASK: Install parking brake switch (para. 4-23).

CHAPTER 8
WHEELS AND STEERING (UNIT) MAINTENANCE

Section I. WHEEL AND RUNFLAT SYSTEM MAINTENANCE

8-1. WHEEL AND RUNFLAT SYSTEM MAINTENANCE TASK SUMMARY

TASK PARA.	PROCEDURES	PAGE NO.
8-2.	Jacking Instructions	8-2
8-3.	Wheel Replacement	8-6
8-4.	Radial Tire, Wheel, and Rubber Runflat Maintenance	8-8
8-5.	Runflat Compressor (P/N J39250) Belt Replacement	8-17
8-6.	Runflat Compressor (P/N 528236) Belt Replacement	8-18
8-7.	Inner Rim Stud Maintenance	8-19
8-8.	Tire Balancing	8-22
8-9.	Front Wheel Toe-in Alignment	8-24
8-10.	Rear Wheel Toe-out Alignment	8-30

8-2. JACKING INSTRUCTIONS

This task covers:

a. Raising Corner of Vehicle
b. Lowering Corner of Vehicle
c. Raising Front of Vehicle
d. Lowering Front of Vehicle
e. Raising Rear of Vehicle
f. Lowering Rear of Vehicle
g. Raising Entire Vehicle
h. Lowering Entire Vehicle

INITIAL SETUP:

Tools
General mechanic's tool kit: automotive (Appendix B, Item 1)

Manual References
TM 9-2320-387-24P

General Safety Instructions
Never work under vehicle unless wheels are blocked and it is properly supported.

Maintenance Level
Unit

WARNING

Hydraulic jacks are used for raising and lowering, and are not used to support vehicle. Never work under vehicle unless wheels are blocked and it is properly supported. Injury or damage to equipment may result if vehicle suddenly shifts or moves.

a. Raising Corner of Vehicle

1. Block wheels (2) or (4).
2. Place jack under lower control arm (5) on corner to be raised.
3. Raise vehicle (1) high enough to place trestle (3).
4. Place trestle (3) under flat portion of frame rail (7) and lower jack until weight is supported by trestle (3).

b. Lowering Corner of Vehicle

1. Raise vehicle (1) and remove trestle (3).
2. Lower vehicle (1).
3. Remove blocks from wheels (2) or (4).

c. Raising Front of Vehicle

1. Block rear wheels (2).
2. Center jack under front suspension front crossmember (6). Use a wood block between jack and crossmember (6).
3. Raise vehicle (1) high enough to place trestles (3).
4. Place trestles (3) under flat portion of frame rails (7) and lower jack until weight is supported by trestles (3).

d. Lowering Front of Vehicle

1. Raise vehicle (1) and remove trestles (3).
2. Lower vehicle (1).
3. Remove blocks from rear wheels (2).

8-2. JACKING INSTRUCTIONS (Cont'd)

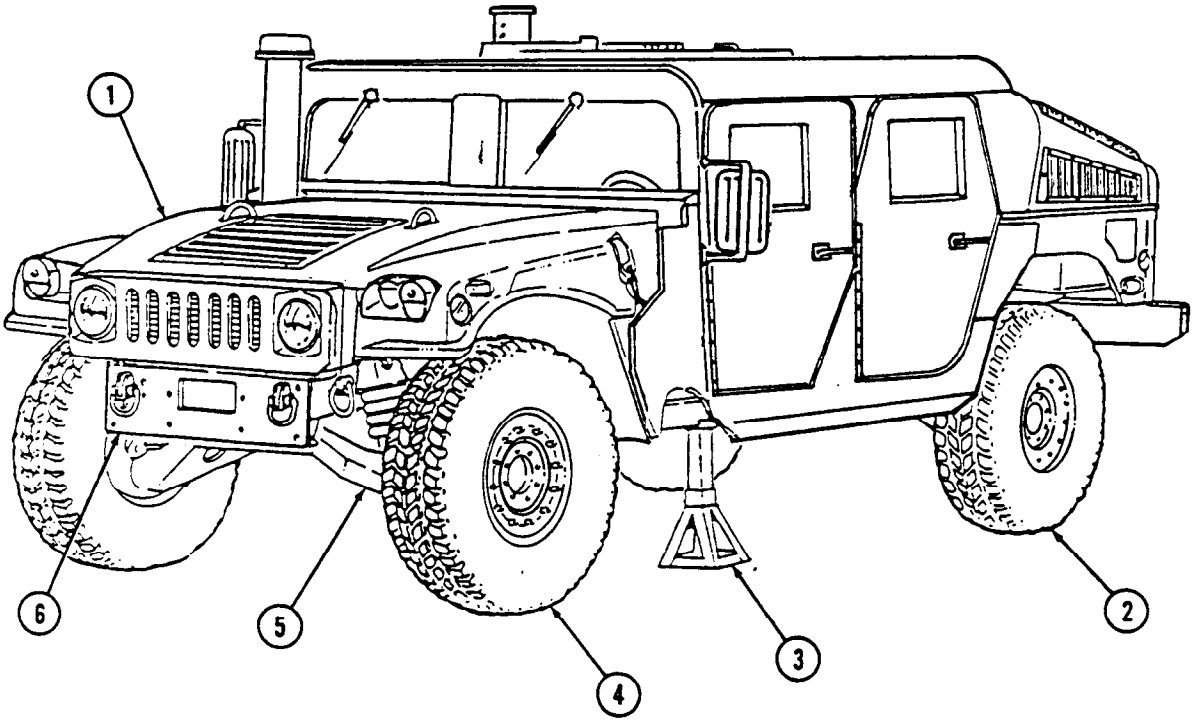

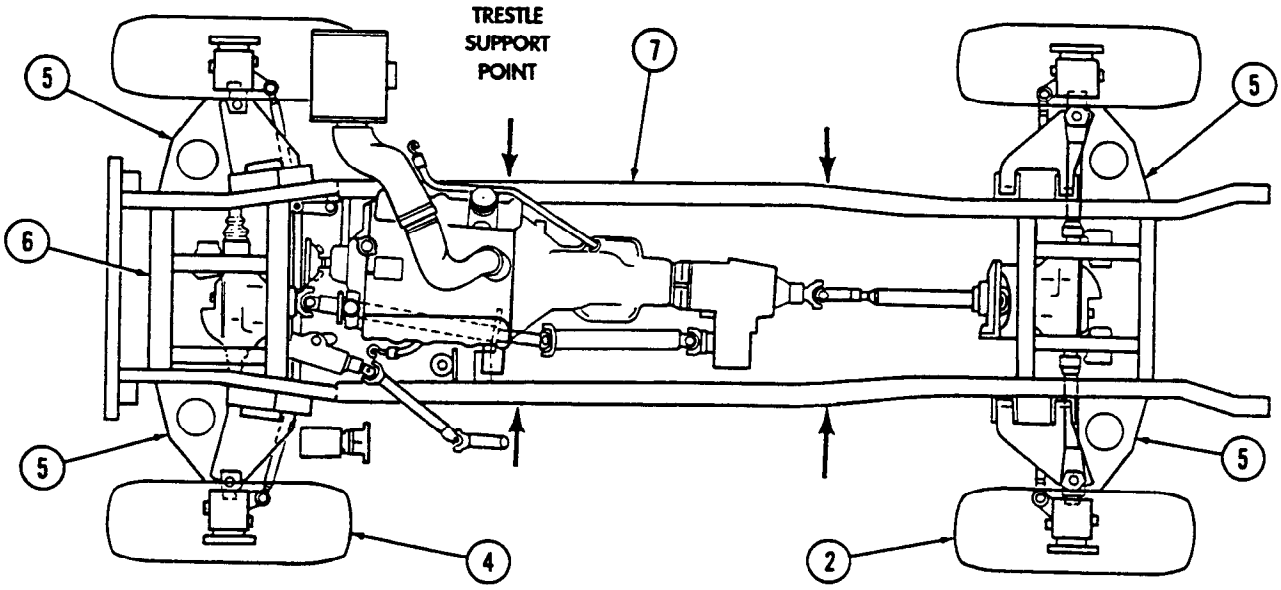

8-2. JACKING INSTRUCTIONS (Cont'd)

e. Raising Rear of Vehicle

1. Block front wheels (4).
2. Center jack under rear suspension rear crossmember (6). Use a wood block between jack and crossmember (6).
3. Raise vehicle (1) high enough to place trestles (3).
4. Place trestles (3) under flat portion of frame rails (5) and lower jack until weight is supported by trestles (3).

f. Lowering Rear of Vehicle

1. Raise vehicle (1) and remove trestles (3).
2. Lower vehicle (1).
3. Remove blocks from front wheels (4).

g. Raising Entire Vehicle

1. Raise front of vehicle (task c.).
2. Center jack under rear suspension rear crossmember (6). Use a wood block between jack and crossmember (6).
3. Raise vehicle (1) high enough to place trestles (3).
4. Place trestles (3) under flat portion of frame rails (5) and lower jack until weight is supported by trestles (3).
5. Move wheel blocks aside.

h. Lowering Entire Vehicle

1. Raise rear of vehicle (1) and remove trestles (3).
2. Lower rear of vehicle (1) and block rear wheels (2).
3. Lower front of vehicle (task d.).

8-2. JACKING INSTRUCTIONS (Cont'd)

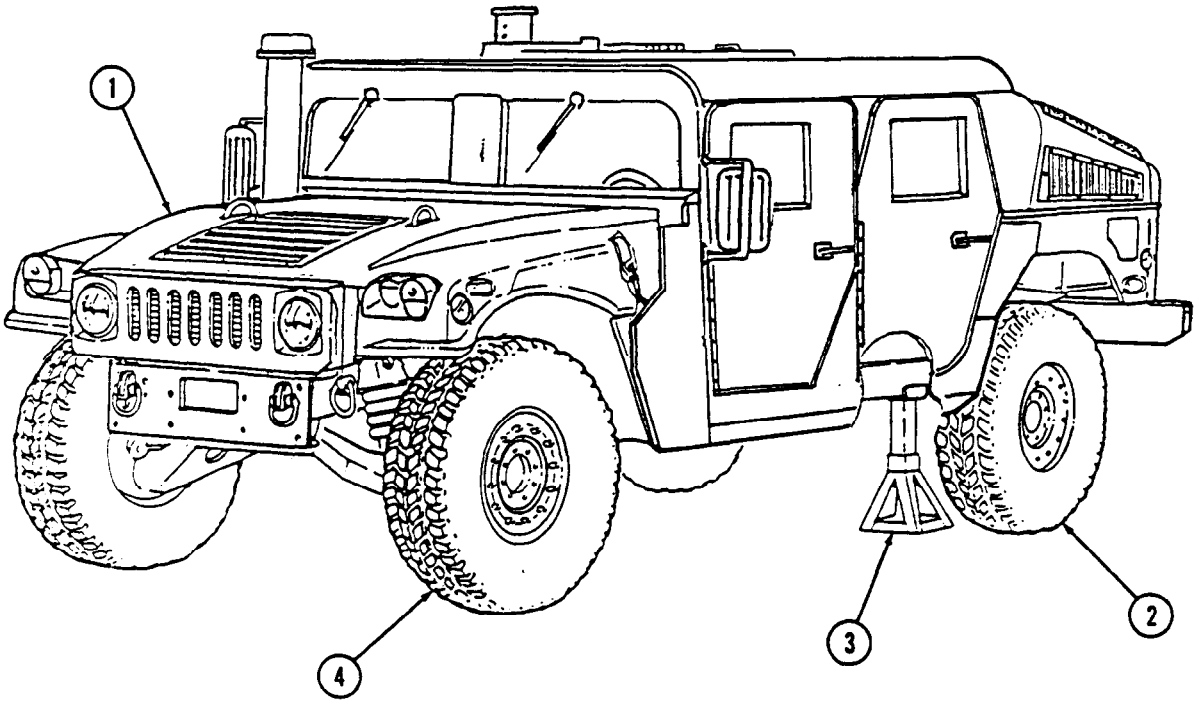

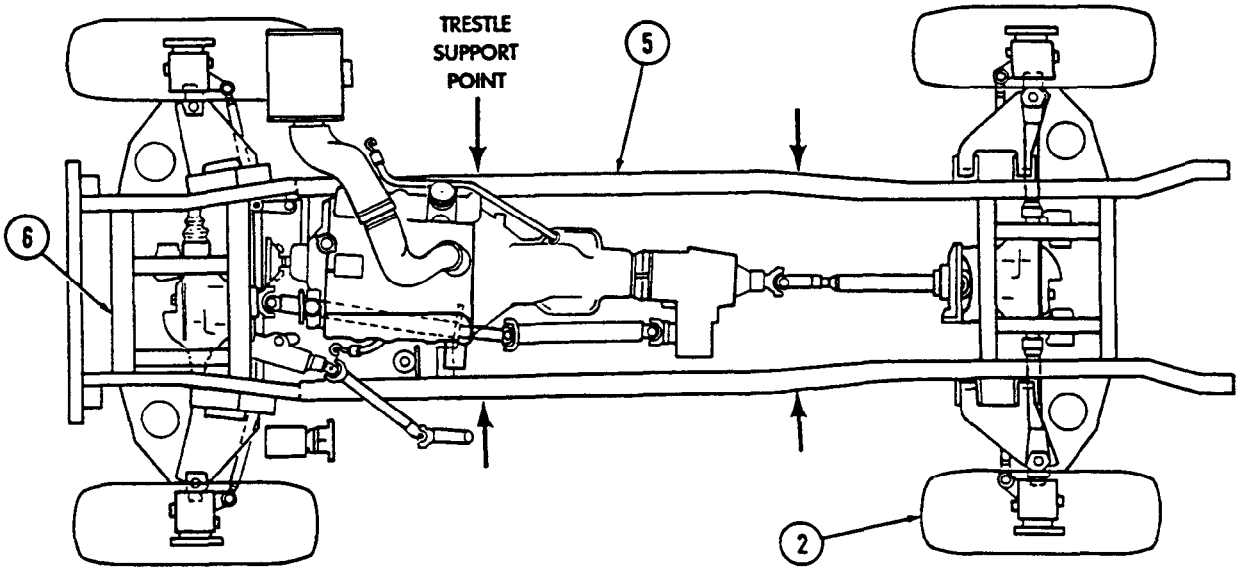

8-3. WHEEL REPLACEMENT

This task covers:

a. Removal

b. Installation

INITIAL SETUP:

Tools

General mechanic's tool kit:
automotive (Appendix B, Item 1)
Maintenance and repair shop equipment:
(automotive (Appendix B, Item 2)

Manual References

TM 9-2320-387-24P

General Safety Instructions

- Always apply parking brake and chock opposite wheel before removing wheel.
- Remove only inner group of nuts when removing a wheel from vehicle.

Maintenance Level

Unit

WARNING

- Always apply parking brake and chock opposite wheel before removing wheel. Avoid removing wheel when vehicle is on sloping terrain. Injury to personnel or damage to equipment may result.
- Remove only inner group of nuts when removing a wheel from vehicle. Removing outer nuts which hold the rim together while the assembly is inflated could result in serious injury or death.

a. Removal

1. Loosen eight lug nuts (2), but do not remove.
2. Raise and support corner of vehicle (para. 8-2).
3. Remove eight lug nuts (2) and wheel (1) from geared hub (3).

b. Installation

NOTE

- Install lug nuts with fingers to full engagement. If nuts resist finger-tightening, discard nuts. Examine studs for damage and replace if damaged (para. 6-13).
- The radial tire is nondirectional and can be used in either position.

1. Install wheel (1) on geared hub (3) with eight lug nuts (2).
2. Remove support and lower corner of vehicle (para. 8-2).
3. Tighten eight lug nuts (2) to 90-110 lb-ft (122-149 N•m) in tightening sequence shown.

8-3. WHEEL REPLACEMENT (Cont'd)

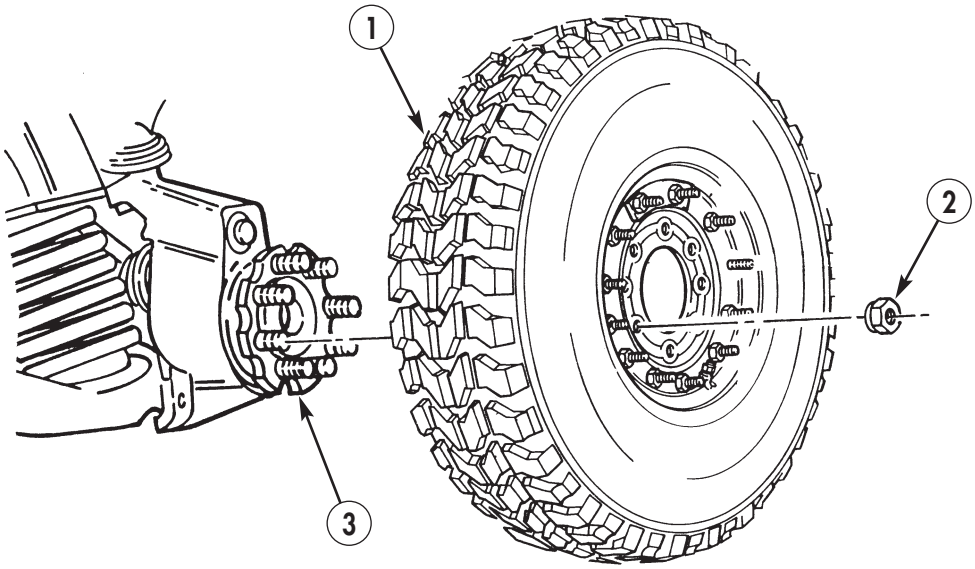

TIGHTENING SEQUENCE

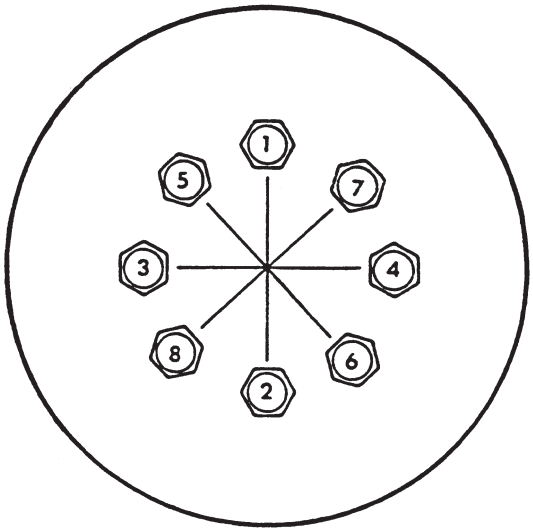

8-4. RADIAL TIRE, WHEEL, AND RUBBER RUNFLAT MAINTENANCE

This task covers:

a. Disassembly
b. Inspection and Cleaning
c. Repair
d. Assembly

INITIAL SETUP:

Tools

General mechanic's tool kit: automotive (Appendix B, Item 1)
Maintenance and repair shop equipment: automotive (Appendix B, Item 2)

Special Tools

Runflat compressor (Appendix B, Item 115)
Torque adapter, 9/16-in. (Appendix B, Item 133)
Socket adapter (Appendix B, Item 135)

Materials/Parts

Twelve locknuts (Appendix G, Item 84)
O-ring seal (Appendix G, Item 287)
Locknut (Appendix G, Item 86)
O-ring (Appendix G, Item 232)
Lubricant (Appendix G, Item 192)
Detergent (Appendix C, Item 25)
Sealing compound, if required (Appendix C, Item 61)

Manual References

TM 9-2320-387-10
TM 9-2610-200-14
TM 9-2320-387-24P

Equipment Condition

Wheel removed (para. 8-3).

General Safety Instructions

- Do not use tire machine.
- Ensure tire is totally deflated before removing wheel locknuts.
- Never use tubes in wheel assemblies.
- Rim surfaces must be kept clean and free of rust and dirt.
- Never use wheel assemblies with damaged studs.
- Never inflate a wheel assembly with the wheel locknuts removed.
- Never inflate a wheel assembly without first checking wheel locknut torques.
- Do not exceed recommended tire inflation pressure.
- Always use a tire inflation cage and a clip-on air chuck for tire inflation.
- Ensure runflat compressor strap is centered around runflat.
- Never install radial tire on eight-bolt wheel.

Maintenance Level

Unit

WARNING

- Do not use tire machine. Injury to personnel or damage to equipment may result.
- In all disassembly operations, ensure the tire is totally deflated before removing wheel locknuts. Failure to follow proper safety precautions could cause serious injury or death.

a. Disassembly

1. Remove valve core (7) from insert (8) and deflate tire (6).
2. Use a circular pattern and loosen twelve wheel locknuts (2) securing rim halves (1) and (5) together. If you hear escaping air, do not proceed. Wait until sound stops. When tire (6) is fully deflated, remove wheel locknuts (2). Discard locknuts (2).

8-4. RADIAL TIRE, WHEEL, AND RUBBER RUNFLAT MAINTENANCE (Cont'd)

WARNING

Never inflate a wheel assembly with the wheel locknuts removed in an attempt to separate inner and outer rim halves. The assembly will separate under pressure, resulting in serious injury or death.

3. Remove outer rim half (1) from tire (6).
4. Remove insert (8) and locknut (10) from outer rim (1). Discard locknut (10).
5. Remove O-ring (9) from insert (8). Discard O-ring (9).
6. Remove O-ring seal (3) from inner rim half (5). Cut O-ring seal (3) in two to make sure it cannot be reused. Discard O-ring seal (3).
7. Remove tire (6) from inner rim half (5).
8. Remove balance weights (4) from rim halves (1) and (5), if present. Discard balance weights (4).

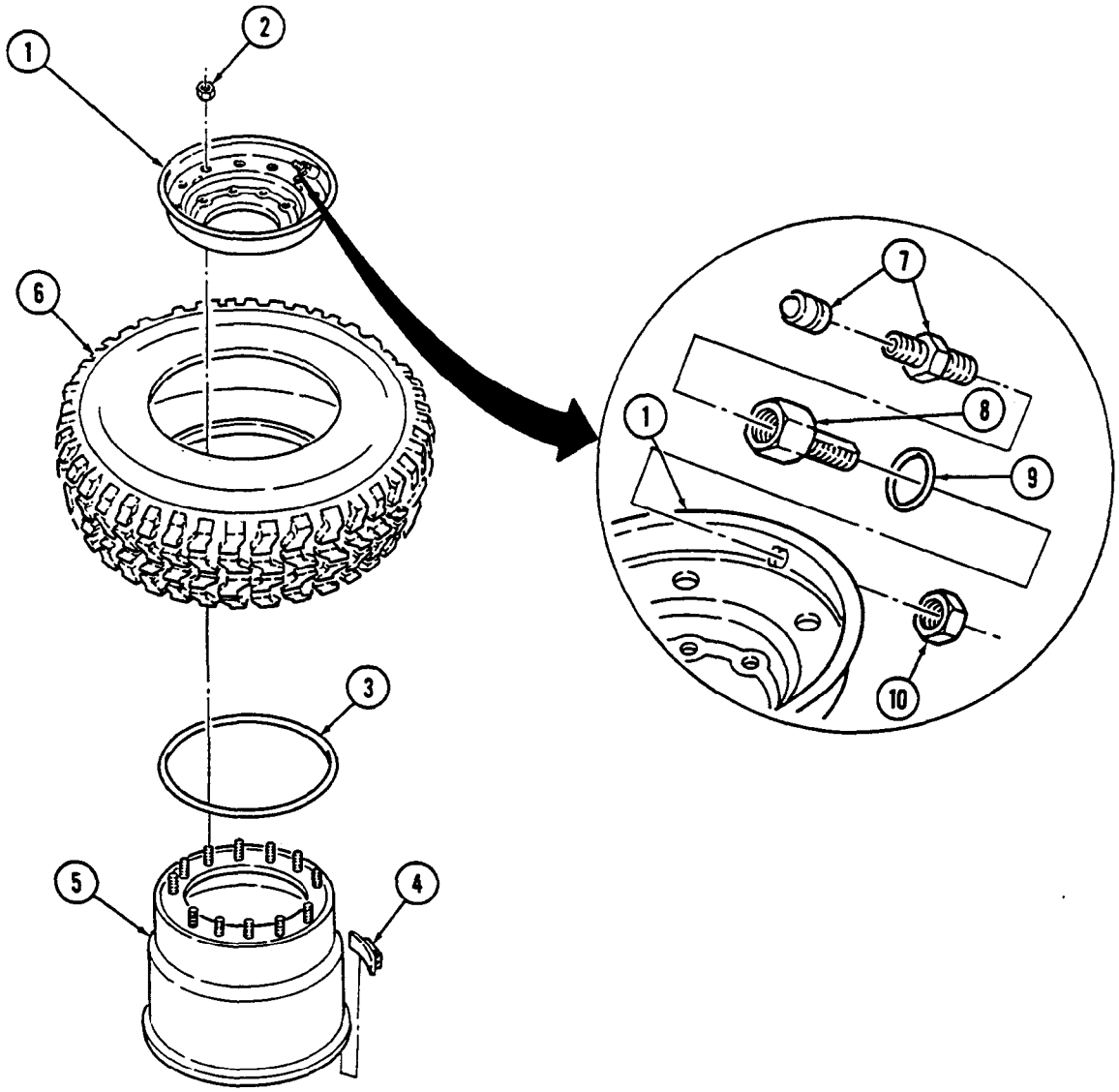

8-4. RADIAL TIRE, WHEEL, AND RUBBER RUNFLAT MAINTENANCE (Cont'd)

9. Lay tire (1) flat.

WARNING

Do not use compressor strap if it is frayed or damaged. Ensure runflat is free of grease and runflat compressor strap is centered around runflat. Failure to do so may cause injury to personnel.

NOTE

Perform steps 11 and 12 when using runflat compressor P/N J39250.
Perform steps 13 and 14 when using runflat compressor P/N 528236.

10. Position runflat compressor (3) on runflat (2) so that runflat compressor hex-drive (4) is facing up and strap (5) is centered around runflat (2).

NOTE

Compress runflat by rotating hex-drive in either direction. Rotate hex-drive the opposite direction to loosen.

11. Using runflat compressor (3), compress runflat (2).
12. Position runflat compressor (6) on an outer edge of runflat (2) with handle assembly (7) facing up and strap (8) centered around runflat (2).

NOTE

Compress runflat by rotating handle assembly in a clockwise direction. Rotate handle assembly counterclockwise to loosen.

13. Using runflat compressor (6), compress runflat (2).

NOTE

- It may be necessary to use a tire spoon and tire soap to remove runflat from tire.
- When using runflat compressor P/N 528236, handle may need to be removed before removing runflat.

14. Remove runflat (2) from tire (1) and remove runflat compressor (3) or (6) from runflat (2).

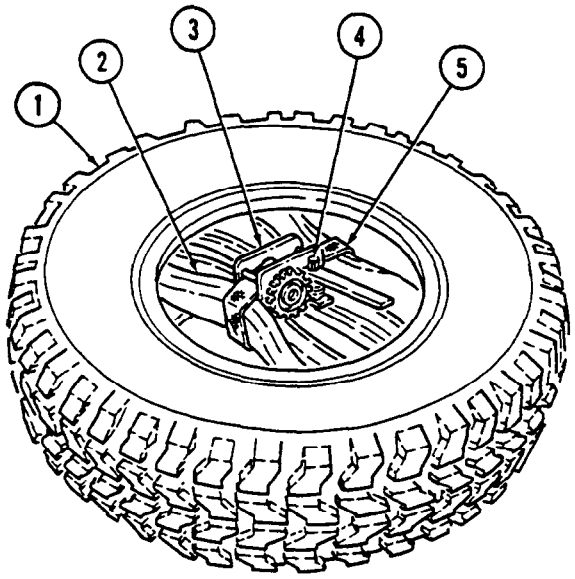

RUNFLAT COMPRESSOR (P/N J39250)

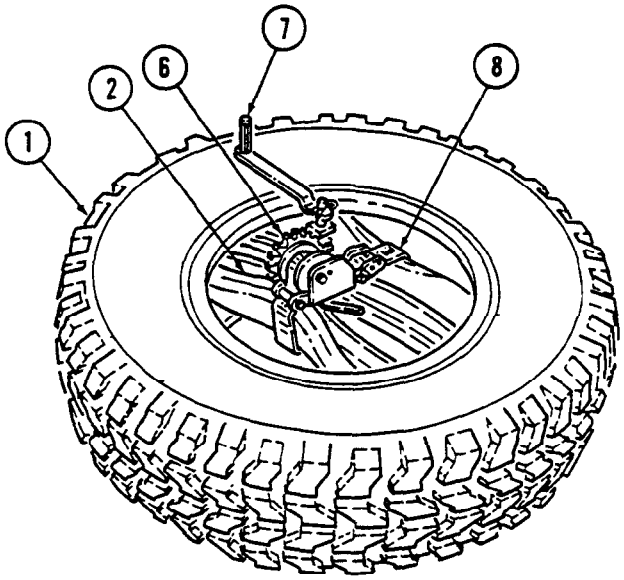

RUNFLAT COMPRESSOR (P/N 528236)

8-4. RADIAL TIRE, WHEEL, AND RUBBER RUNFLAT MAINTENANCE (Cont'd)

b. Inspection and Cleaning

CAUTION

Do not reuse a tire which has been run flat without thoroughly inspecting for damage. Failure to follow these instructions may result in damage to equipment.

1. Inspect inside of tire (1) for cord or belt separation and inner liner damage. Replace tire (1) if damaged.
2. Inspect tire bead (9) for abrasions caused from runflat (2). Replace tire (1) if damaged.
3. Check for protruding objects inside tire (1) which may not be visible from outside. Repair tire (1) if damaged.
4. Check tread depth on tire (1). Tread should not be worn below level of wear bars (10). Replace tire (1) if tread is worn below wear bars (10) or 1/16 in. (1.59 mm).
5. Clean all grease, dirt, and foreign material from the runflat (2) with soap and water and allow to air-dry. Inspect runflat (2) for splitting, wear, or excessive chafing. Replace runflat (2) if damaged.

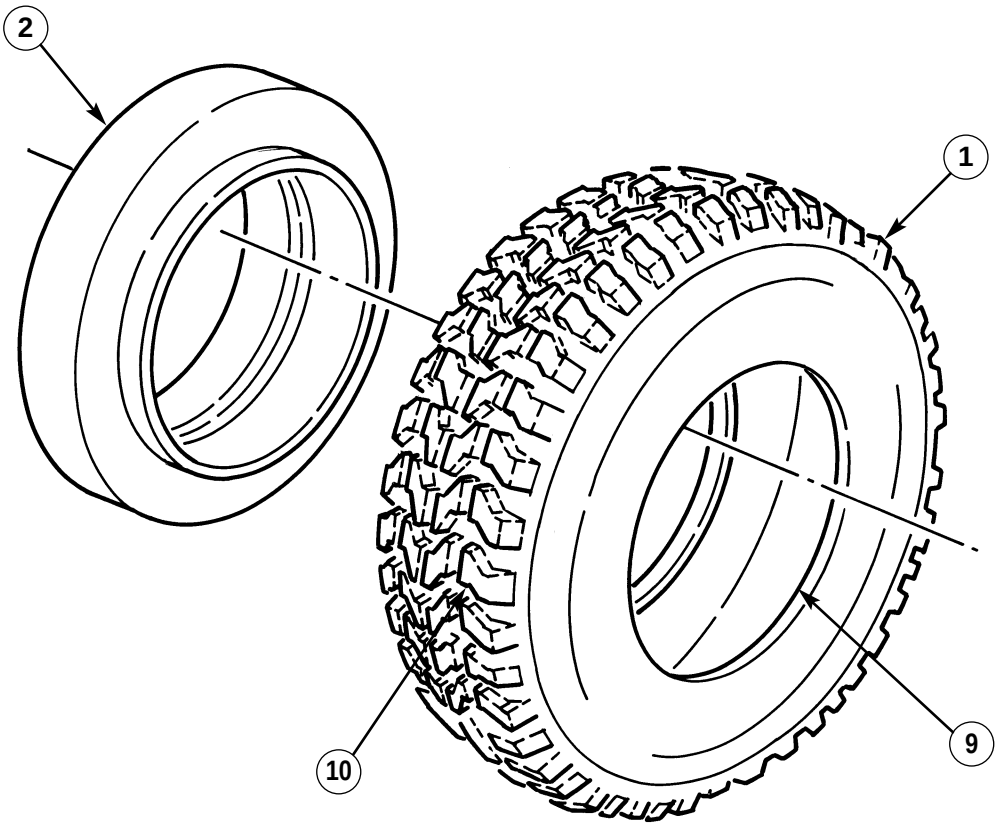

8-4. RADIAL TIRE, WHEEL, AND RUBBER RUNFLAT MAINTENANCE (Cont'd)

WARNING

O-ring sealing surfaces and pressure relief grooves must be kept clean and free of rust and dirt. Failure to do so may cause the wheel assembly to separate under pressure, causing serious injury or death.

6. Using wire brush, clean studs (4). Clean all dirt and foreign material from rim halves (1) and (2) with soap and water and allow to air-dry. Ensure O-ring sealing surfaces (5) and pressure relief grooves (3) on rim halves (1) and (2) are smooth and clean.
7. Inspect rim halves (1) and (2) for cracks, bent sealing surfaces (5), or oversized mounting holes. Replace rim halves (1) or (2) if cracked, bent, or if mounting holes are oversized.

WARNING

Never use wheel assemblies with studs which are damaged, loose, or have damaged threads. Damaged studs can cause improper assembly, which may cause individual fasteners to fail. Any of these situations may cause serious injury or death.

8. Inspect inner rim half (2) for cracked, broken, rusted, pitted, bent, or loose studs (4) and studs (4) with damaged, mutilated, or deformed threads. Replace studs (4) (para. 8-7) if damaged, loose, or threads are damaged.
9. Inspect insert (6) for damage. Replace insert (6) if damaged.

c. Repair

Refer to TM 9-2610-200-14 for maintenance and repair of tires.

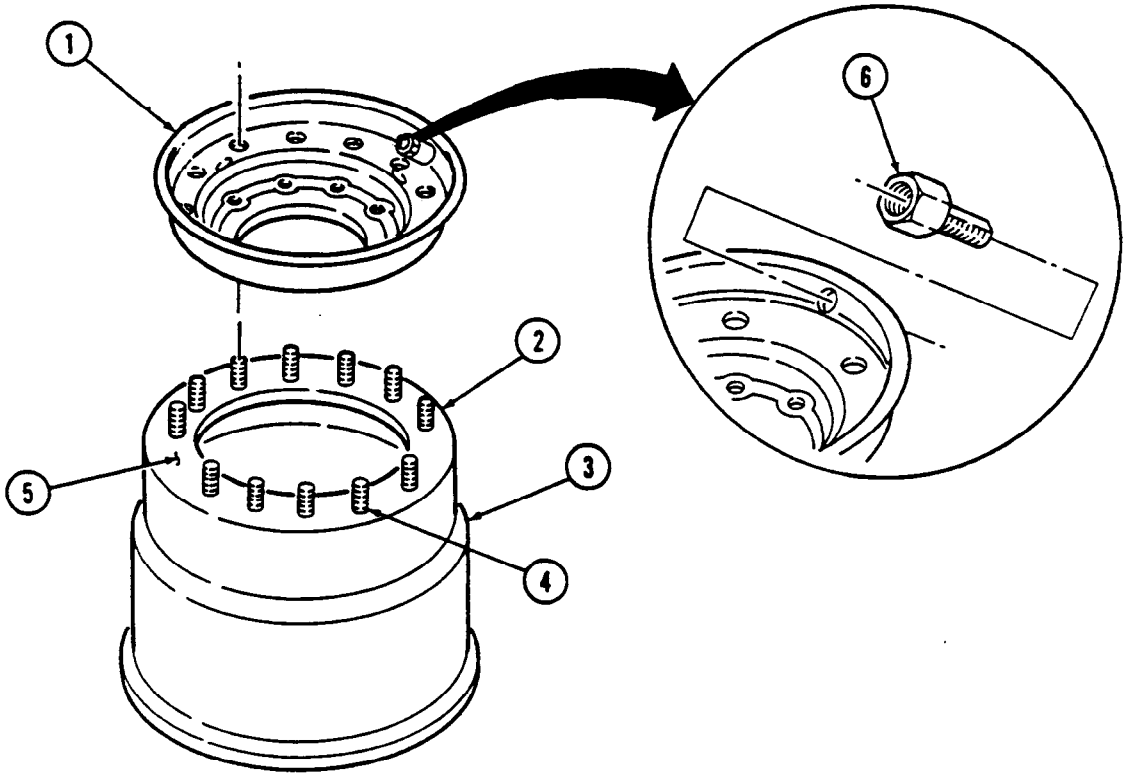

8-4. RADIAL TIRE, WHEEL, AND RUBBER RUNFLAT MAINTENANCE (Cont'd)

d. Assembly

WARNING

- Never use tubes in wheel assemblies. Use of a tube defeats built-in safety features, and may allow the wheel to come apart under pressure, resulting in serious injury or death.
- Use only replacement parts specified in TM 9-2320-387-24P for radial tires. Never install radial tire components on eight-bolt rims. Wheels assembled with components not specified for radial tires could cause the assembly to separate under pressure, resulting in serious injury or death.
- Do not use compressor strap if it is frayed or damaged. Ensure runflat is free of grease and runflat compressor strap is centered on runflat. Failure to do so could cause injury to personnel.

NOTE

Perform steps 1 and 2 when using runflat compressor P/N J39250.
Perform steps 3 and 4 when using runflat compressor P/N 528236.

1. Position runflat compressor (8) on runflat (7) so that runflat compressor hex-drive (9) is facing up and strap (10) is centered around runflat (7).

NOTE

Compress runflat by rotating hex-drive in either direction. Rotate hex-drive opposite to loosen.

2. Using runflat compressor (8), compress runflat (7).
3. Position runflat compressor (11) on an outer edge of runflat (7) with handle assembly (12) facing up and strap (13) centered around runflat (7).

NOTE

Compress runflat by rotating the handle assembly in a clockwise direction. Rotate handle assembly counterclockwise to loosen.

4. Using runflat compressor (11), compress runflat (7).

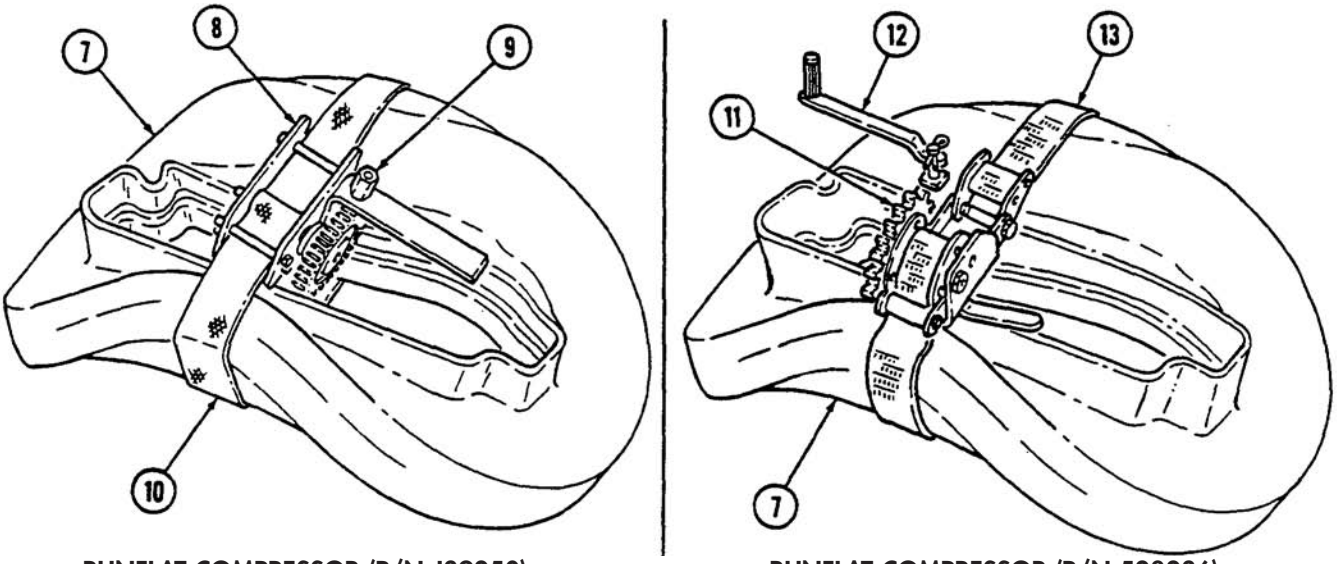

RUNFLAT COMPRESSOR (P/N J39250) RUNFLAT COMPRESSOR (P/N 528236)

8-4. RADIAL TIRE, WHEEL, AND RUBBER RUNFLAT MAINTENANCE (Cont'd)

WARNING

Always wear eye protection and rubber gloves when applying runflat lubricant. Failure to do so may result in injury to personnel.

NOTE

The radial tire is a bidirectional tire and the tread may be positioned in either direction.

5. Using a 2- to 6-inch paint brush, apply an entire 11-oz tube of lubricant evenly (a depth of 1/8 to 3/16 in. (.32 to .475 cm)) on inside of tire (1).

WARNING

Runflat compressor belt and handle may be greasy, which could slip and cause damage to equipment or injury to personnel.

NOTE

It may be necessary to remove handle assembly on runflat compressor P/N 528236 before inserting runflat into tire.

6. Insert runflat (2), compressor side first, as far as possible into tire (1).
7. Lay tire (1) flat on protruding runflat side. Loosen compressor (4). Runflat (2) should insert itself inside tire (1). If not, repeat steps 5 through 7 and/or use a tire spoon to assist in installation.

NOTE

If required, clean and lubricate bearing assembly on runflat compressor P/N 528236 after removal.

8. Loosen runflat compressor (4) and remove from tire (1).
9. Lubricate tire bead (3) and rim bead seat areas with tire soap.

WARNING

Never install radial tire on eight-bolt wheel. Damage to equipment may result, causing injury to personnel.

NOTE

Before installing tire on inner rim half, inspect tire sidewalls for a paint dot. Paint dots are often painted on tires to indicate the tire's light spot for balancing purposes. If paint dot is present, position tire on rim halves so that paint dot is aligned with insert hole on outer rim half.

10. Center runflat (2) in tire (1). Carefully lower tire (1) over inner rim half (8).
11. Ensure runflat (2) is not binding on flat portion of inner rim half (8). Runflat (2) should clear inner rim half (8).

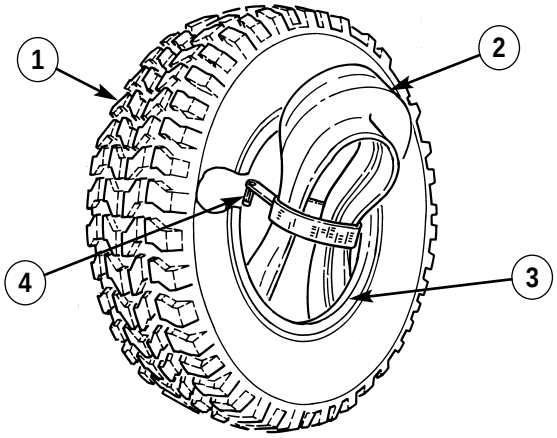

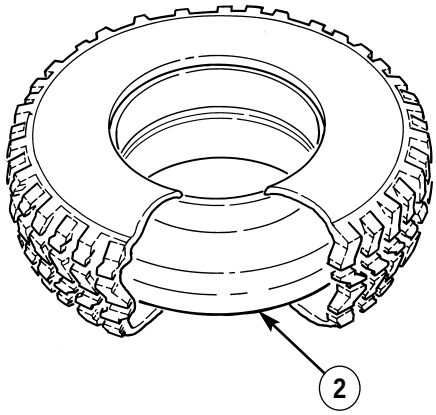

8-4. RADIAL TIRE, WHEEL, AND RUBBER RUNFLAT MAINTENANCE (Cont'd)

NOTE

- Ensure longer lip of runflat seats against outer rim half.
- Align air notch in runflat with valve stem in the rim.

12. Lubricate O-ring seal (7) with tire soap. Install O-ring seal (7), in groove (9) on top of inner rim half (8), around studs (10). Ensure O-ring seal (7) is not twisted and that it is uniformly positioned in groove (9). Do not overstretch O-ring seal (7).
13. Install insert (12) and O-ring (13) on outer rim half (6) with locknut (14). Tighten locknut (14) to 40-60 lb-in. (5-7 N·m).
14. Install valve core (11) in insert (12).
15. Install outer rim half (6) on inner rim half (8).

CAUTION

Tighten locknuts gradually to avoid bent and broken studs or damage to wheel components.

16. Secure outer rim half (6) to inner rim half (8) with twelve locknuts (5). Do not tighten locknuts (5).

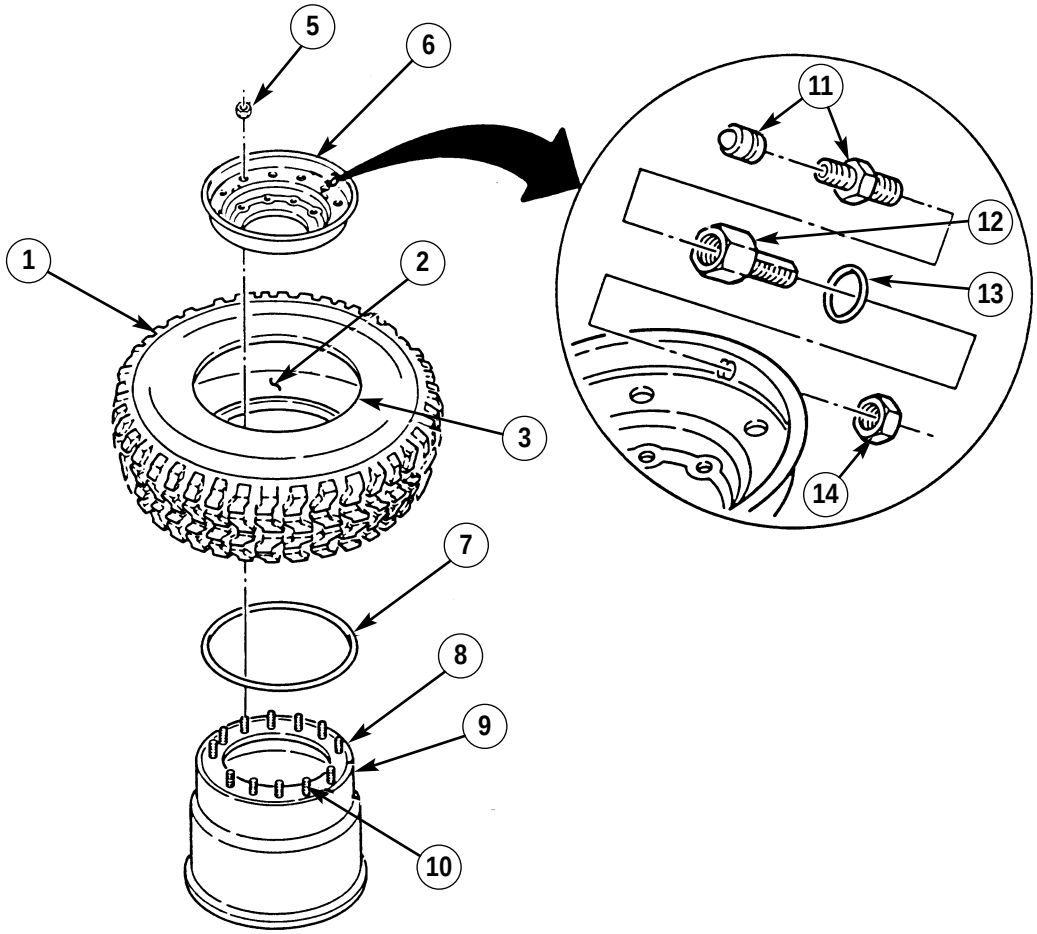

8-4. RADIAL TIRE, WHEEL, AND RUBBER RUNFLAT MAINTENANCE (Cont'd)

17. Tighten locknuts (1) to 85 lb-ft (115 N•m) in tightening sequence shown.
18. Tighten locknuts (1) to 125 lb-ft (170 N•m) in tightening sequence shown.
19. Check wheel assembly (4) for gaps at each stud (2). Use a 0.0015 in. (0.038 mm) thickness gauge to detect gaps. If gaps are detected, disassemble and reassemble wheel assembly 4) and recheck for gaps. If gaps are still detected, replace outer rim half (3).

WARNING

- Always use a tire inflation cage for inflation purposes. Stand on one side of the cage during inflation; never directly in front. Keep hands out of cage during inflation. Inflate assembly to recommended pressure using a clip-on air chuck. Do not exceed 50 psi (345 kPa) cold-inflation pressure. Failure to follow these instructions may result in serious injury or death.
- Never inflate a wheel assembly without having checked wheel locknut torques to ensure the wheel locknuts are tightened to specifications. An assembly with improperly tightened locknuts could separate under pressure, resulting in serious injury or death.

20. Place wheel assembly (4) in safety cage and inflate tire to recommended tire pressure (TM 9-2320-387-10).

TIGHTENING SEQUENCE

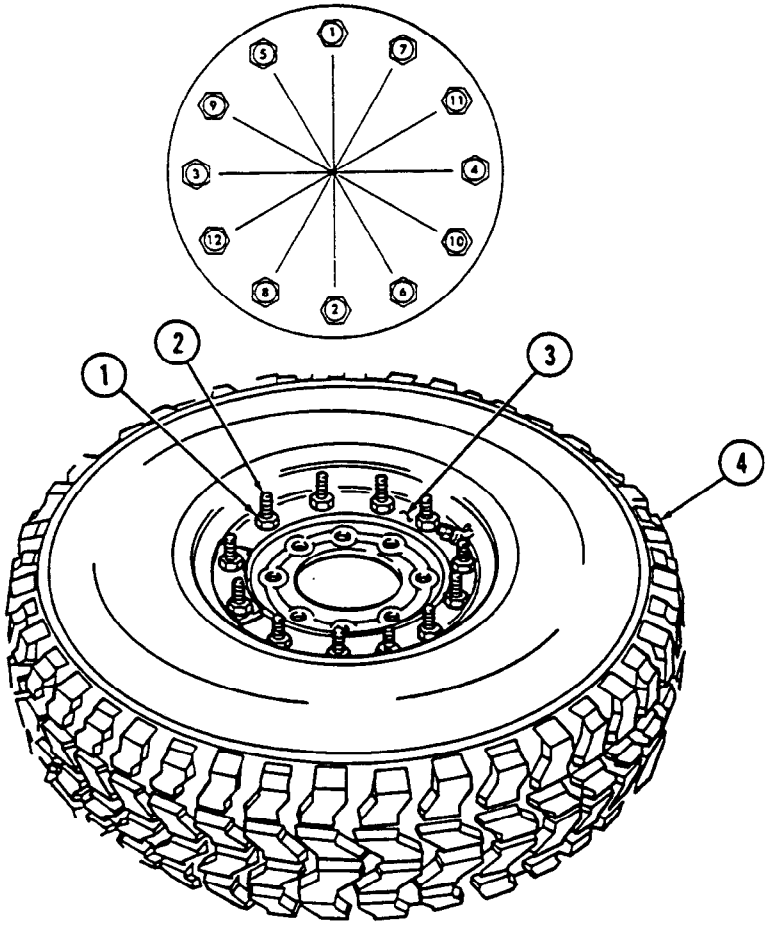

FOLLOW-ON TASK: Balance tire (para. 8-8).

8-5. RUNFLAT COMPRESSOR (P/N J39250) BELT REPLACEMENT

This task covers:

a. Removal **b. Installation**

INITIAL SETUP:

Tools
General mechanic's tool kit:
automotive (Appendix B, Item 1)

Materials/Parts
Runflat belt repair kit
(Appendix G, Item 275)

Manual References
TM 9-2320-387-24P

Maintenance Level
Unit

a. Removal

NOTE

Note position of belt for installation.

1. Remove small pin (8) from belt (4) and worm gear shaft assembly (1). Discard small pin (8).
2. Remove shaft pin (7) and worm gear shaft assembly (1) from compressor assembly (6). Discard shaft pin (7).
3. Remove two locknuts (5), socket-head screws (2), spacers (3), and belt (4) from compressor assembly (6). Discard locknuts (5).

b. Installation

NOTE

Belt overlap is to be positioned so there is an equal amount of belt on each side of worm gear shaft assembly.

1. Install belt (4) on compressor assembly (6) with two spacers (3), socket-head screws (2), and locknuts (5).
2. Install worm gear shaft assembly (1) on compressor assembly (6) with shaft pin (7).
3. Install belt (4) to worm gear shaft assembly (1) with small pin (8).

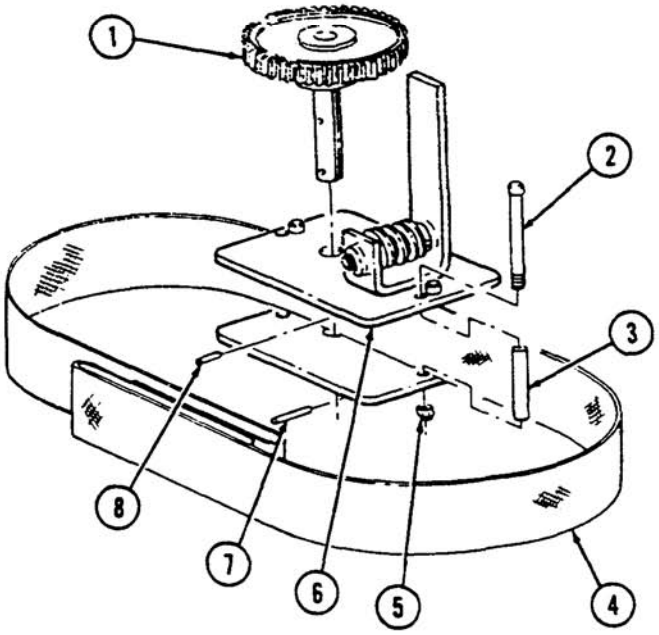

8-6. RUNFLAT COMPRESSOR (P/N 528236) BELT REPLACEMENT

This task covers:

a. Removal **b. Installation**

INITIAL SETUP:

Tools
General mechanic's tool kit: automotive (Appendix B, Item 1)

Materials/Parts
Runflat belt repair kit (Appendix G, Item 276)

Manual References
TM 9-2320-387-24P

Maintenance Level
Unit

a. Removal

NOTE

Note position of belt for installation.

Remove locknut (1), capscrew (2), and belt (3) from compressor (4). Discard locknut (1).

b. Installation

1. Install belt (3) on compressor (4) with capscrew (2) and locknut (1).
2. Loop free end of belt (3) around retaining bracket (5) as shown.

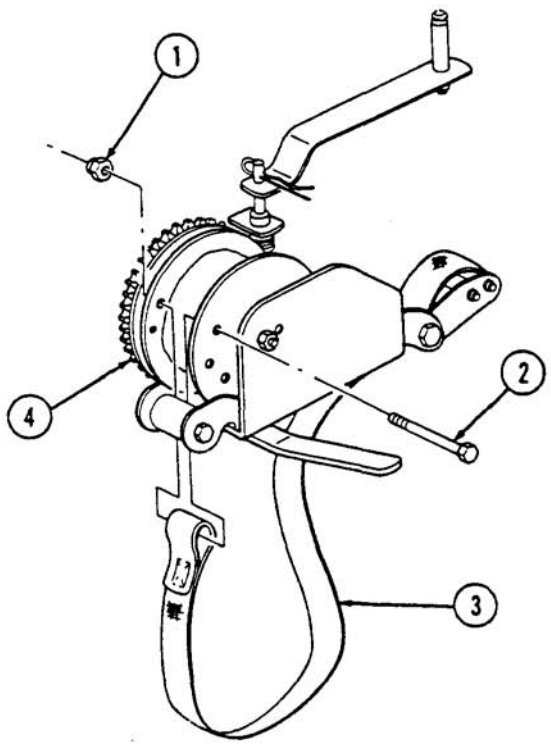

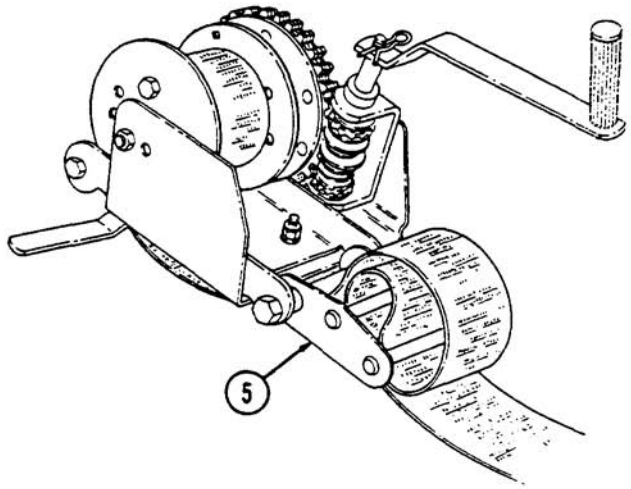

8-7. INNER RIM STUD MAINTENANCE

This task covers:

a. **Removal**
b. **Cleaning and Inspection**
c. **Installation**

INITIAL SETUP:

Tools
General mechanic's tool kit: automotive (Appendix B, Item 1)

Manual References
TM 9-2320-387-10
TM 9-2320-387-24P

Equipment Condition
Wheel removed (para. 8-3).

General Safety Instructions
- Always wear eye protection when replacing wheel studs.

General Safety Instructions (Cont'd)
- Ensure tire is totally deflated before removing wheel locknuts.
- Never use wheel assemblies with damaged studs.
- Never inflate a wheel assembly without first checking wheel locknut torques.
- Always use a tire inflation cage and a clip-on air chuck for tire inflation.

Maintenance Level
Unit

WARNING

Always wear eye protection when replacing wheel studs. Severe eye injury may result if metal chips contact eyes.

a. Removal

NOTE

Perform steps 1 through 4 for stud removal without disassembly of wheel. Perform steps 5 and 6 for stud removal with disassembled wheel.

1. Place wheel assembly in tire inflation cage.

WARNING

In all assembly operations, ensure the tire is totally deflated before removing wheel locknuts. Failure to follow proper safety precautions may result in serious injury or death.

2. Remove valve core (3) from valve bore (4) and deflate tire (1). Run a wire through valve bore (4) to ensure it is not plugged.
3. When tire (1) is fully deflated, loosen wheel locknut (2) from each side of the broken stud(s) (5). If you hear escaping air, do not proceed. Wait until the sound stops and recheck valve bore (4). When you are certain tire is fully deflated, proceed to remove wheel locknut (2). Discard locknut (2).

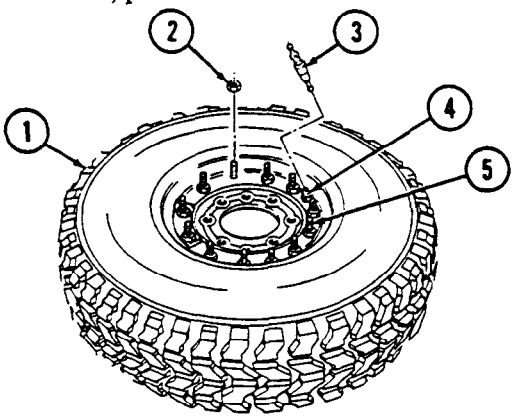

8-7. INNER RIM STUD MAINTENANCE (Cont'd)

NOTE

When replacing broken rim stud(s), replace studs on both sides of the broken stud(s).

4. Drive studs (1) out of inner rim (2). Discard studs (1).
5. Disassemble wheel and runflat (para. 8-4).
6. Drive stud (3) out of inner rim half (4). Discard stud (3).

b. Cleaning and Inspection

1. Using wire brush, clean studs. Clean all dirt and foreign material from rim with soap and water and allow to air-dry.

WARNING

Never use wheel assemblies with studs which are damaged, loose, or have damaged threads. Damaged studs can cause improper assembly, which could cause individual fasteners to fail. Any of these situations may result in serious injury or death.

2. Inspect inner rim (4) for cracked, broken, rusted, pitted, bent, or loose studs (3), and studs (3) with damaged, mutilated, or deformed threads.

c. Installation

NOTE

Perform steps 1 and 2 for stud installation with disassembled wheel. Perform steps 3 through 11 for stud installation without disassembly of wheel.

1. Align splines on stud (3) with splines in inner rim (4) and drive stud (3) into inner rim (4) until stud shoulder seats against inner rim (4).
2. Assemble wheel and runflat (para. 8-4).
3. Align splines on stud (1) with splines in inner rim (2) and drive stud (1) into rim (2) until shoulder of stud (1) seats against inner rim (2).
4. Repeat step 3 for all studs (1) being replaced.

CAUTION

Tighten locknuts gradually to avoid bent and broken studs or damage to wheel components will result.

5. Install locknuts (6) on studs (1).

NOTE

After replacing broken stud(s), all rim nuts must be retorqued.

6. Tighten locknuts (6) to 85 lb-ft (115 N•m) in sequence shown.
7. Tighten locknuts (6) to 125 lb-ft (170 N•m) in sequence shown.
8. Check wheel assembly for gaps at each stud. Use a 0.0015 in. (0.038 mm) thickness gauge to detect gaps. If gaps are detected, disassemble and reassemble wheel assembly and recheck for gaps. If gaps are still detected, replace outer rim half (para. 8-4).
9. Install valve core (7) in valve bore (8).

8-7. INNER RIM STUD MAINTENANCE (Cont'd)

WARNING

- Never inflate a wheel assembly before checking wheel locknut torques to ensure the wheel locknuts are tightened to specifications. An assembly with improperly tightened locknuts could separate under pressure, resulting in serious injury or death.
- Always use a tire inflation cage for inflation purposes. Stand on one side of the cage during inflation, never directly in front. Keep hands out of cage during inflation. Inflate assembly to recommended pressure, using a clip-on air chuck. Do not exceed 50 psi (345 kPa) cold inflation pressure. Failure to follow these instructions may result in serious injury or death.

10. Place tire assembly (5) in safety cage and inflate front and rear tires to recommended tire pressure (TM 9-2320-387-10).
11. Check for leaks around rim edges, insert, and valve bore (8) with soapy solution.

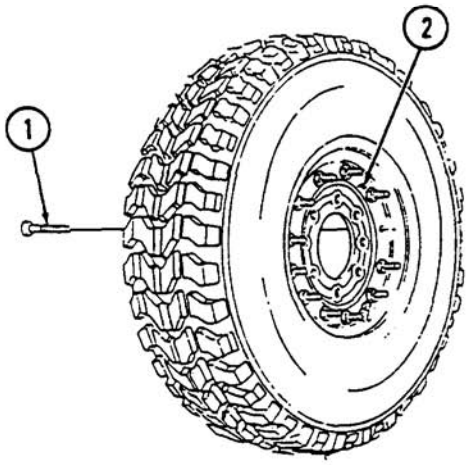

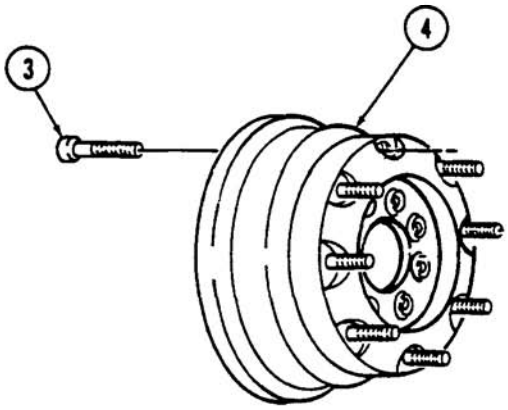

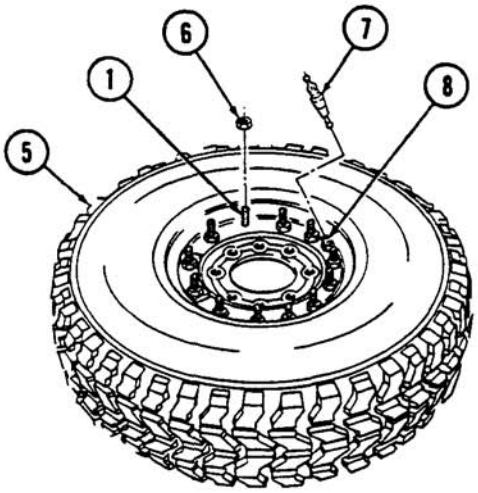

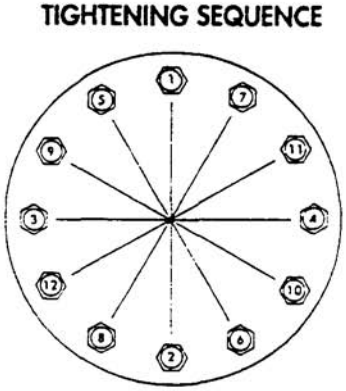

FOLLOW-ON TASK: Install wheel (para. 8-3).

8-8. TIRE BALANCING

This task covers:

Balancing

INITIAL SETUP:

Tools
General mechanic's tool kit: automotive (Appendix B, item 1)

Test Equipment
Bubble balancer (Appendix B, Item 114)

Materials/Parts
Balance weights (as required) (Appendix G, Item 2)
Chalk (Appendix C, Item 20)

Personnel Required
One mechanic
One assistant

Manual References
TM 9-2320-387-24P

Equipment Condition
Wheel removed (para. 8-3).

Maintenance Level
Unit

Balancing

NOTE

- Wheel and tire must be clean and free of foreign material.
- Wheel must be centered on balancer, utilizing lug nut mounting holes.

1. Mount tire (1) and wheel (2) on balancer, with curb side up.
2. Locate and mark light spot (5) on tire (1).

NOTE

- If more than 29 oz of weight is required to balance tire, wheel and runflat must be disassembled and tire rotated 180° on wheel.
- Tires can be balanced using either adhesive-backed or clip-on type weights. Follow steps 3 through 10 if using adhesive-backed weights, or steps 11 through 15 for clip-on type weights.

3. Add 6 oz of weight (4) to center of light spot (5) between wheel (2) and clamp ring (3) until weight required to balance tire (1) is met or exceeded. Do not permanently attach weights (4) at this time.
4. If weight requirement is exceeded, evenly remove weights (4) in 1/2 oz increments from each side of light spot (5) until tire (1) and wheel (2) are properly balanced.
5. Record amount of weights (4) used, and remove tire (1) and wheel (2) from balancer.
6. Working from light spot (5) on front side of tire (1), mark rear side of tire (1) and inside of wheel (2) for light spot (5) identification.
7. Temporarily attach weights (4) with tape to inside of wheel (2), in a radial direction, following weight placement diagram.
8. Repeat step 1 and add or subtract weights (4) until tire (1) is properly balanced.

NOTE

Wheel must be smooth and clean before attaching wheel weights.

9. Remove adhesive backing from weights (4) and attach to inside of wheel (2) following weight placement diagram.
10. Repeat step 1 to ensure tire (1) is properly balanced.
11. Place a 6 oz weight (6) on edge of wheel (2) with clip (7) centered on light spot (5). Do not permanently attach weight (6) at this time.

8-8. TIRE BALANCING (Cont'd)

12. Check wheel (2) and tire (1) for proper balance. If necessary, add weights (6) or replace 6 oz weight (6) with a lighter weight (6), making sure weight clips (7) are centered on light spot (5) and weights (6) are not permanently attached.
13. Repeat step 12 until wheel (2) and tire (1) are properly balanced.
14. Record total amount of weight (6) on wheel (2), and remove weight(s) (6) from wheel (2) and wheel (2) from balancer.

NOTE

Total amount of weight must be split evenly between inner and outer edges of wheel rim. For example, if 6 oz of total weight was required to balance wheel, attach 3 oz to outer edge of rim and 3 oz to inner edge of rim.

15. Attach weights (6) to inner and outer edges of wheel (2), ensuring weight clips (7) are centered on light spot (5), or weights (6) are placed evenly to sides of light spot (5) if more than one weight (6) is used. Using small hammer or clip claw-hammer tool, tap weights to conform to wheel (2) edge contour.

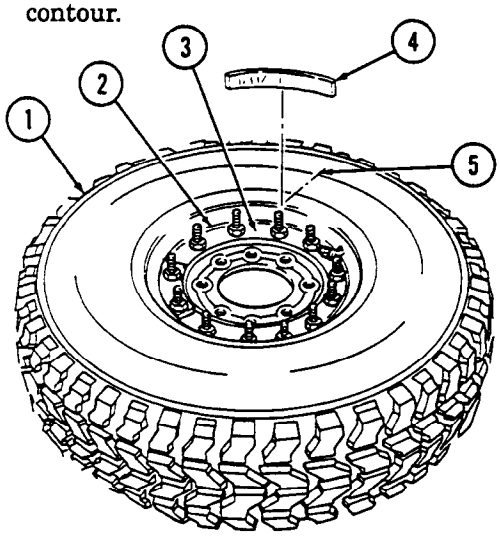

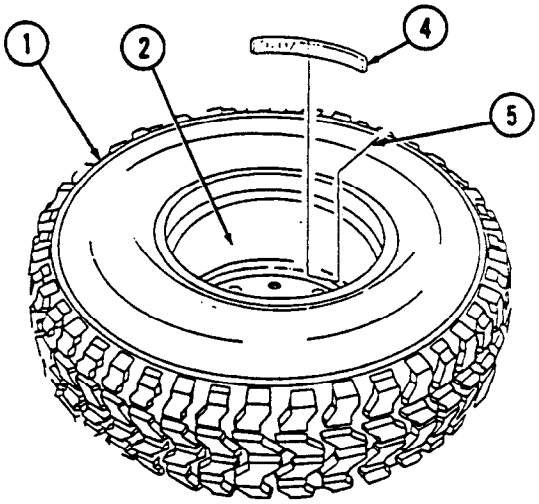

WEIGHT PLACEMENT DIAGRAM

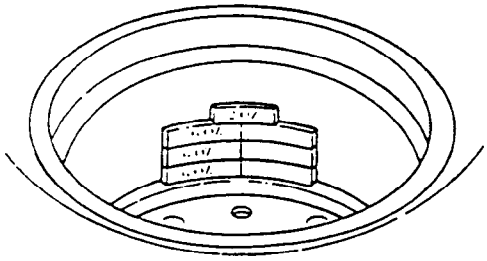

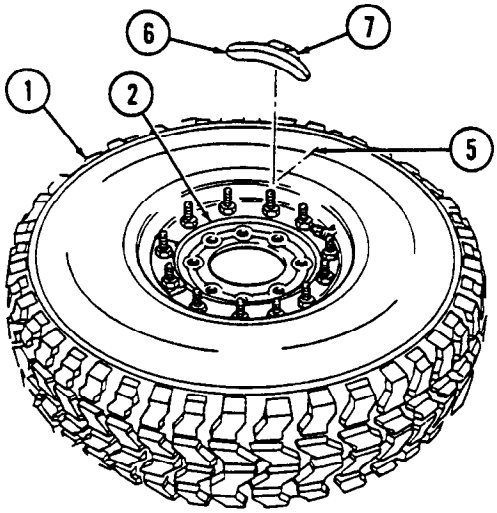

FOLLOW-ON TASK: Install wheel (para. 8-3).

8-9. FRONT WHEEL TOE-IN ALIGNMENT

This task covers:

a. Preliminary Inspection
b. Toe-in Check
c. Toe-in Adjustment

INITIAL SETUP:

Tools
General mechanic's tool kit: automotive (Appendix B, Item 1)

Materials/Parts
Chalk (Appendix C, Item 20)

Personnel Required
One mechanic
One assistant

Manual References
TM 9-2320-387-10
TM 9-2320-387-24P

Equipment Condition
- Tires inflated to proper pressure (TM 9-2320-387-10).
- Vehicle on level ground.

Maintenance Level
Unit

NOTE

- It is not necessary to perform front wheel toe-in alignment prior to the scheduled semiannual or 3,000 mile (4,827 km) maintenance interval unless abnormal vehicle handling or control is reported, or it is directed by another maintenance task.
- Front wheel alignment adjustments other than toe-in are performed by GS maintenance (Chapter 34).
- Ensure M1113 models have S250 shelter installed before performing front wheel toe-in alignment.

a. Preliminary Inspection

1. Check all tires (6) for uniform tread wear.
2. Raise vehicle and place support under lower control arms (9).
3. Check geared hubs (4) for output spindle end play by grasping edges of tires (6) and attempting to move tires (6) up and down. Adjust spindle bearings (para. 6-12) if any spindle movement is apparent.
4. Check for looseness of upper ball joints (3) by grasping top of tires (6), and attempting to move tires (6) in and out. Replace upper ball joints (3) (para. 6-23) if tire (6) movement at top outer edge of tires (6) is 3/8 in. (9 mm) or more.
5. Check for looseness of lower ball joints (7) by grasping bottom of tires (6), and attempting to move tires (6) in and out. Replace lower ball joints (7) (para. 6-24) if tire (6) movement at bottom outer edge of tires (6) is 1/2 in. (13 mm) or more.
6. Lower vehicle.
7. Check for looseness of tie rod ends (5) by attempting to move tie rods (8) vertically and horizontally. Replace tie rod end(s) (5) (para. 8-16) if any movement is apparent.
8. Check for damaged control arm bushings (1). Replace upper control arms (2) (para. 6-25) or lower control arms (9) (para. 6-26) if bushings (1) are damaged.

8-9. FRONT WHEEL TOE-IN ALIGNMENT (Cont'd)

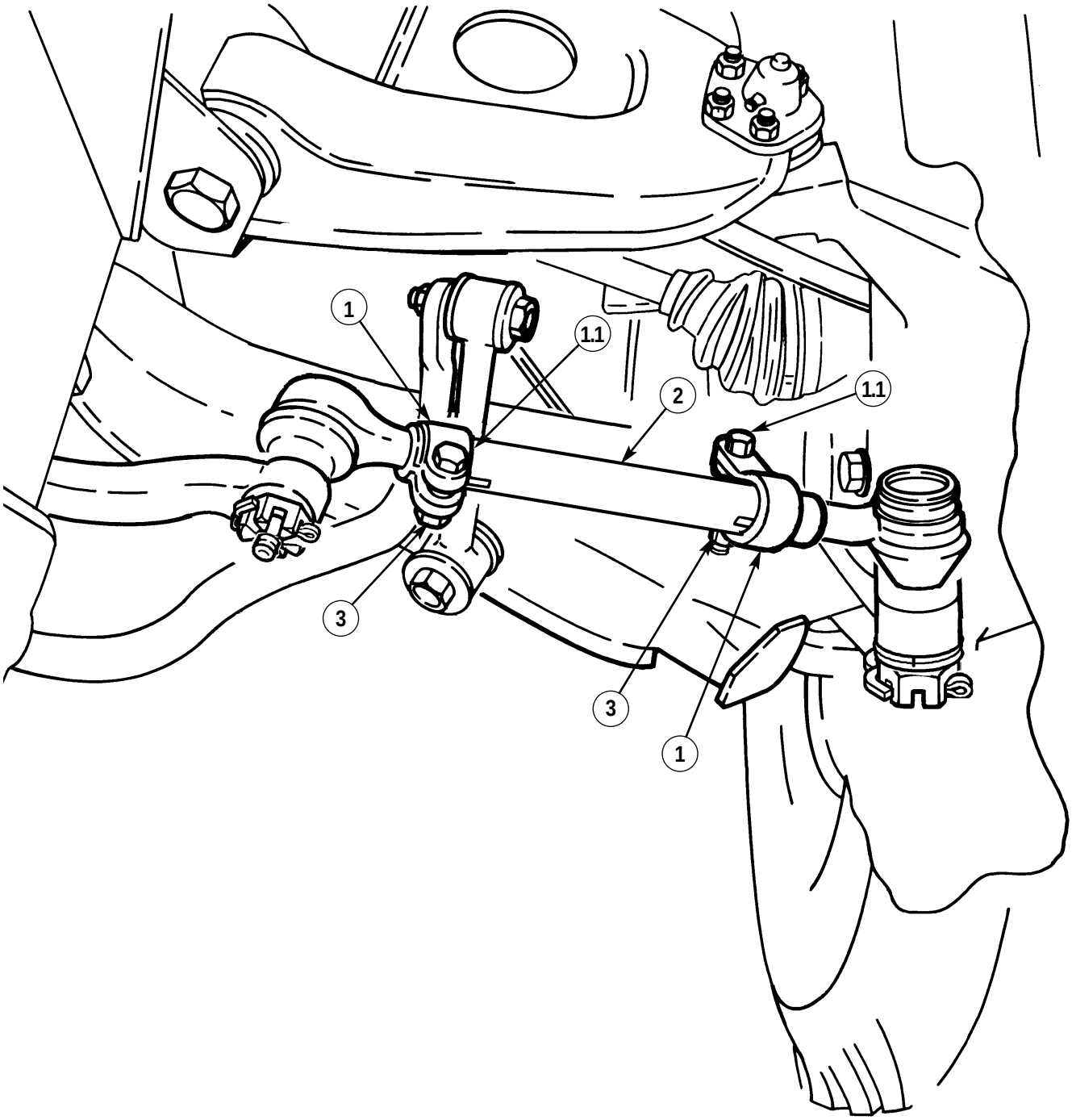

8-9. FRONT WHEEL TOE-IN ALIGNMENT (Cont'd)

b. Toe-in Check

NOTE

- To ensure proper alignment, vehicle must be at curb weight or normal operating weight.
- Vehicle must be on level ground with wheels set straight ahead.
- Steps 1 through 3 will determine centerline of tire.
- Point of measurement for checking toe-in will be where lines marked in steps 1 and 3 intersect.

1. Mark line (4) on center tread (1) of tire (2) 16-1/2 in. (42 cm) from ground.
2. Measure total width of tire tread (3) and record.
3. Mark line (5) on center tread (1) at one-half total tread width (3).
4. Repeat steps 1 through 3 for opposite tire.
5. Measure distance between points of measurement on front side of tires (2) and record.
6. Rotate tires (2) by moving vehicle forward until points of measurement are 16-1/2-in. (42 cm) above the ground at rear side of tires (2).
7. Measure distance between points of measurement on rear side of tires (2) and record.

NOTE

- If measurement is larger on front side of tires than measurement on rear side of tires, tires have toe-out.
- If toe-in alignment does not meet specifications, repeat checking procedures to eliminate any possible reading errors.

8. Subtract measurement for front side of tires (2), obtained in step 5, from measurement for rear side of tires (2), step 7. The result of this subtraction represents inches of toe-in. Refer to table 8-1 for toe-in specifications. If toe-in does not meet specifications, adjust toe-in (task c.).

Table 8-1. Toe-in Alignment Adjustment Specifications.

TOE-IN (FRONT) ADJUSTMENT SPECIFICATIONS	
VEHICLE PAYLOAD	M1113 M1114
Vehicle @ curb weight or normal operating weight	1/4 ± 1/4 in. (6 mm ± 6 mm)

9. If toe-in is within specifications, refer to task c. and perform step 5.

8-9. FRONT WHEEL TOE-IN ALIGNMENT (Cont'd)

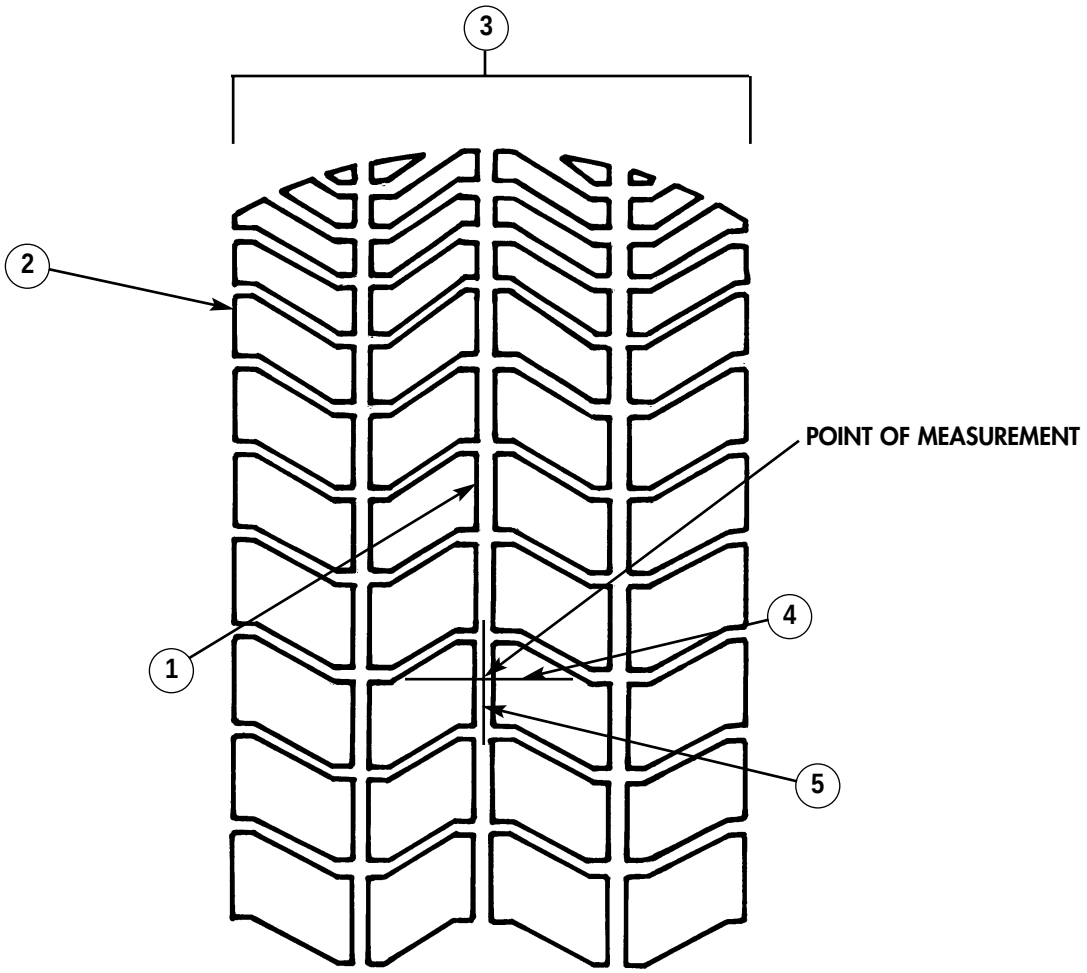

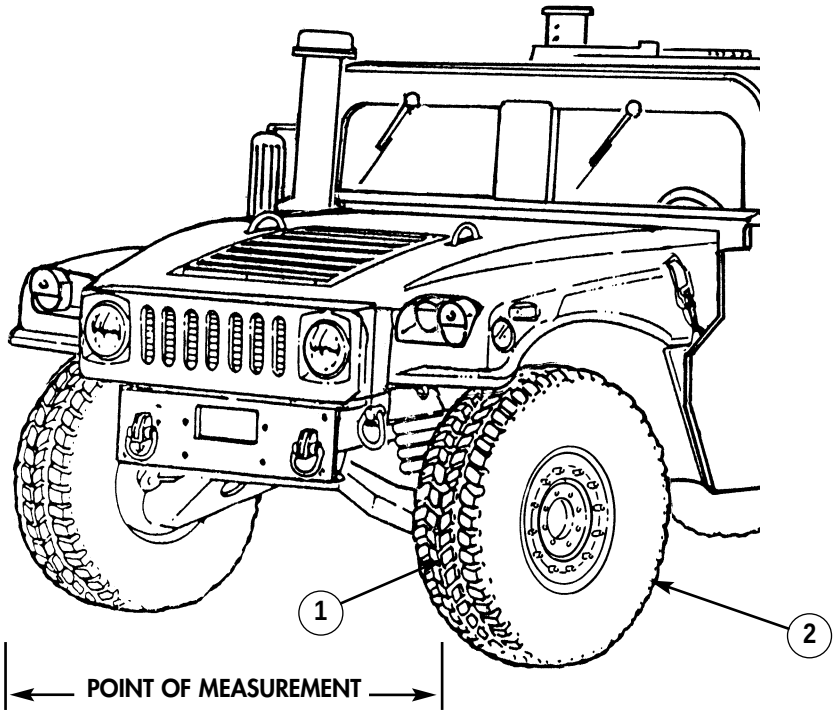

8-9. FRONT WHEEL TOE-IN ALIGNMENT (Cont'd)

c. Toe-in Adjustment

1. Loosen two locknuts (3) and screws (1.1) securing clamps (1) on each adjusting sleeve (2).

NOTE

Toe-in can be increased or decreased by changing length of tie rods. A threaded sleeve is provided for this purpose. Both tie rods must be the same length ± 1/8 in. (3 mm) after adjustment.

2. Turn each adjusting sleeve (2) equally, but in opposite directions.
3. Roll vehicle rearward, then forward, to original position.
4. Repeat toe-in check and adjustment procedures until correct adjustment is indicated.

CAUTION

Ensure bolt and nut on adjusting sleeve clamp nearest to geared hub is facing halfshaft. Bolt and nut on adjusting sleeve clamp nearest to frame must be facing 180° away from stabilizer bar to prevent damage to equipment.

5. Secure two clamps (1) on each adjusting sleeve (2) with two screws (1.1) and locknuts (3). Tighten locknuts (3) to 30 lb-ft (40 N·m).

8-9. FRONT WHEEL TOE-IN ALIGNMENT (Cont'd)

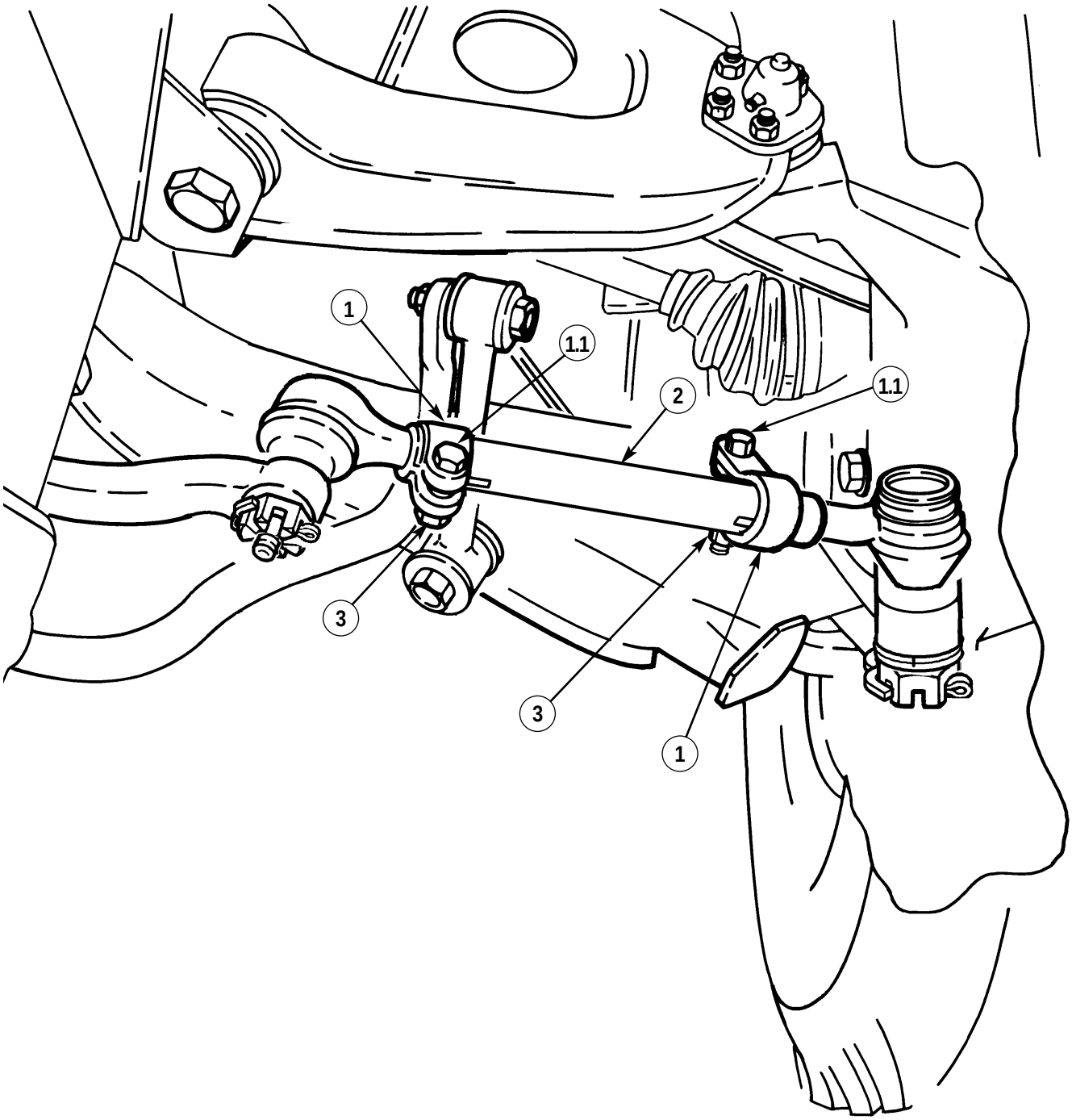

FOLLOW-ON TASK: Operate vehicle (TM 9-2320-387-10) and check for pull or wander.

8-10. REAR WHEEL TOE-OUT ALIGNMENT

This task covers:

a. Preliminary Inspection
b. Toe-out Check
c. Toe-out Adjustment

INITIAL SETUP:

Tools
General mechanic's tool kit: automotive (Appendix B, Item 1)
Maintenance and repair shop equipment: automotive (Appendix B, Item 2)

Personnel Required
One mechanic
One assistant

Manual References
TM 9-2320-387-10
TM 9-2320-387-24P

Equipment Condition
- Tires inflated to proper pressure (TM 9-2320-387-10).
- Vehicle on level ground.

Maintenance Level
Unit

NOTE

- It is not necessary to perform rear wheel toe-out alignment prior to the scheduled semiannual or 3,000 mile (4,827 km) maintenance interval unless abnormal vehicle handling or control is reported, or it is directed by another maintenance task.
- Rear wheel alignment adjustments other than toe-out are performed by DS maintenance (chapter 21).
- Ensure M1113 models have S250 shelter installed before performing rear wheel toe-out alignment.

a. Preliminary Inspection

1. Check all tires (7) for uniform tread wear.
2. Raise vehicle and place support under lower control arms (11).
3. Check geared hubs (5) for output spindle end play by grasping edges of tires (7) and attempting to move tires (7) up and down. Adjust spindle bearings (para. 6-12) if any spindle movement is apparent.
4. Check for looseness of upper ball joints (4) by grasping top of tires (7) and attempting to move tires (7) in and out. Replace upper ball joints (4) (para. 6-23) if tire (7) movement at top outer edge of tires (7) is 3/8 in. (9 mm) or more.
5. Check for looseness of lower ball joints (8) by grasping bottom of tires (7) and attempting to move tires (7) in and out. Replace lower ball joints (8) (para. 6-24) if tire (7) movement at bottom outer edge of tires (7) is 1/2 in. (13 mm) or more.
6. Lower vehicle.
7. Check for looseness of radius rod ends (6) by attempting to move adjusting sleeves (10) vertically and horizontally. Replace radius rod end(s) (6) (para. 6-22) if any movement is apparent.
8. Check for damaged control arm bushings (1). Replace upper control arms (3) (para. 6-25) or lower control arms (11) (para. 6-26) if bushings (1) are damaged.
9. Proceed to task b.

8-10. REAR WHEEL TOE-OUT ALIGNMENT (Cont'd)

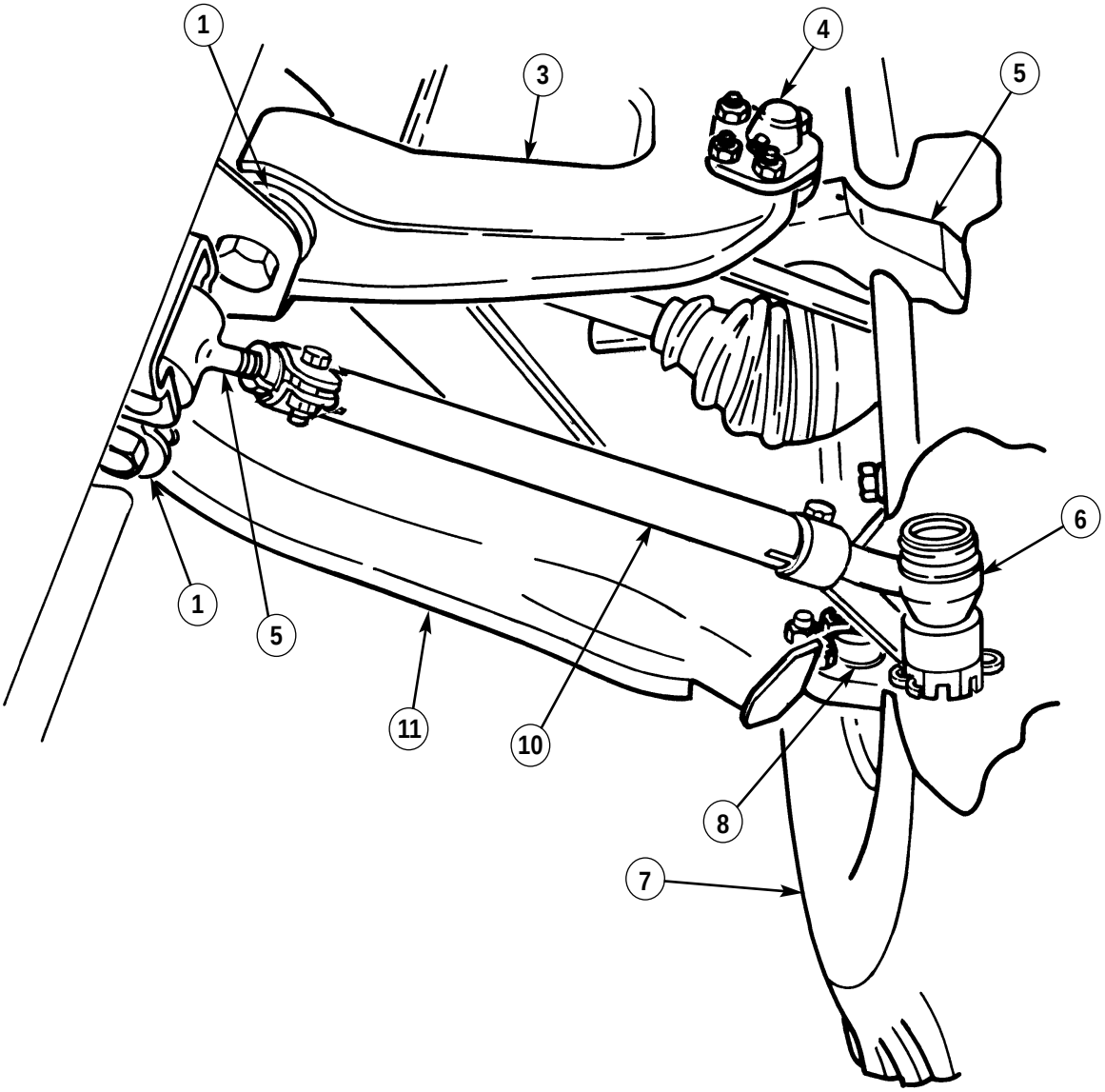

8-10. REAR WHEEL TOE-OUT ALIGNMENT (Cont'd)

b. Toe-out Check

NOTE

- To ensure proper alignment, vehicle must be at curb weight or normal operating weight.
- Vehicle must be on level ground with wheels set straight ahead.
- Steps 1 through 3 will determine centerline of tire.
- Point of measurement for checking toe-out will be where lines marked in steps 1 and 3 intersect.

1. Mark line (4) on center tread (1) of tire (2) 16-1/2-in. (42 cm) from ground.
2. Measure total width of tire tread (3) and record.
3. Mark line (5) on center tread (1) at one-half total tread width (3).
4. Repeat steps 1 through 3 for opposite tire.
5. Measure distance between points of measurement on front side of tires (2) and record.
6. Rotate tires (2) by moving vehicle forward until points of measurement are 16-1/2 in. (42 cm) above the ground at rear side of tires (2). Repeat steps 1 through 4 for side of tires.
7. Measure distance between points of measurement on rear side of tires (2) and record.

NOTE

- If measurement is larger on rear side of tires than measurement on front side of tires, tires have toe-in.
- If toe-out alignment does not meet specifications, repeat checking procedures to eliminate any possible reading errors.

8. Subtract meaurement obtained in step 7 for rear side of tires (2) from measurement obtained in step 5 for front side of tires (2). The result of this subtraction represents inches of toe-out. Refer to table 8-2 for toe-out specifications. If toe-out does not meet the specifications, adjust toe-out (task c.).

Table 8-2. Toe-out Alignment Adjustment Specifications.

TOE-OUT (REAR) ADJUSTMENT SPECIFICATIONS	
VEHICLE PAYLOAD	**M1113 M1114**
Vehicle @ curb weight or normal operating weight	1/2 ± 1/4 in. (12.7 mm ± 6 mm)

9. If toe-out is within specifications, refer to task c. and perform step 5.

8-10. REAR WHEEL TOE-OUT ALIGNMENT (Cont'd)

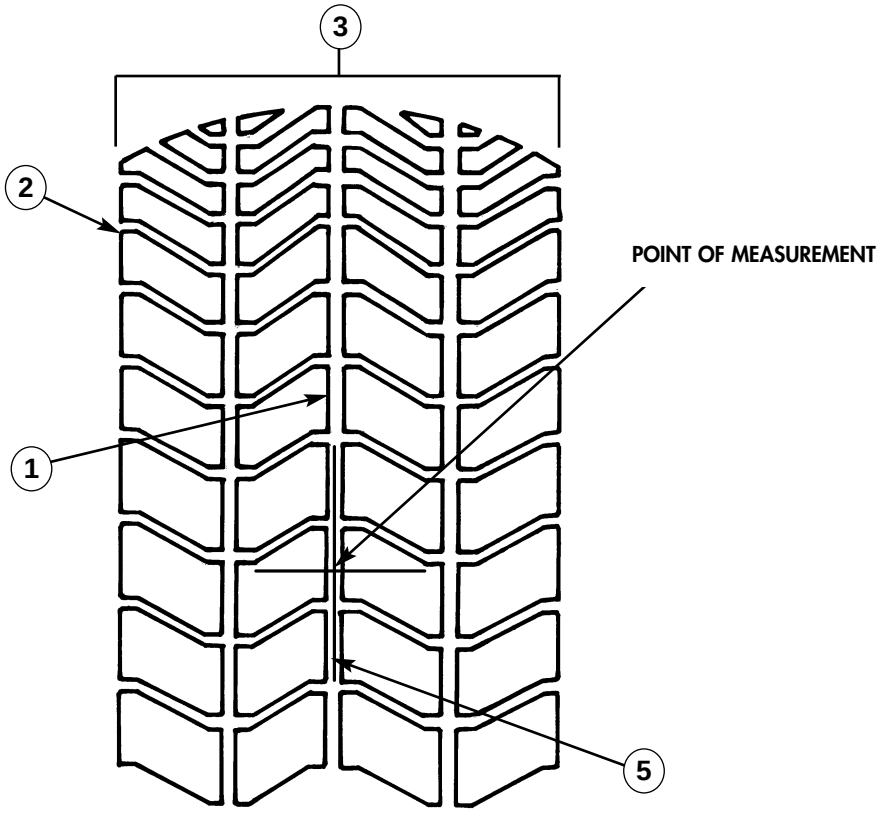

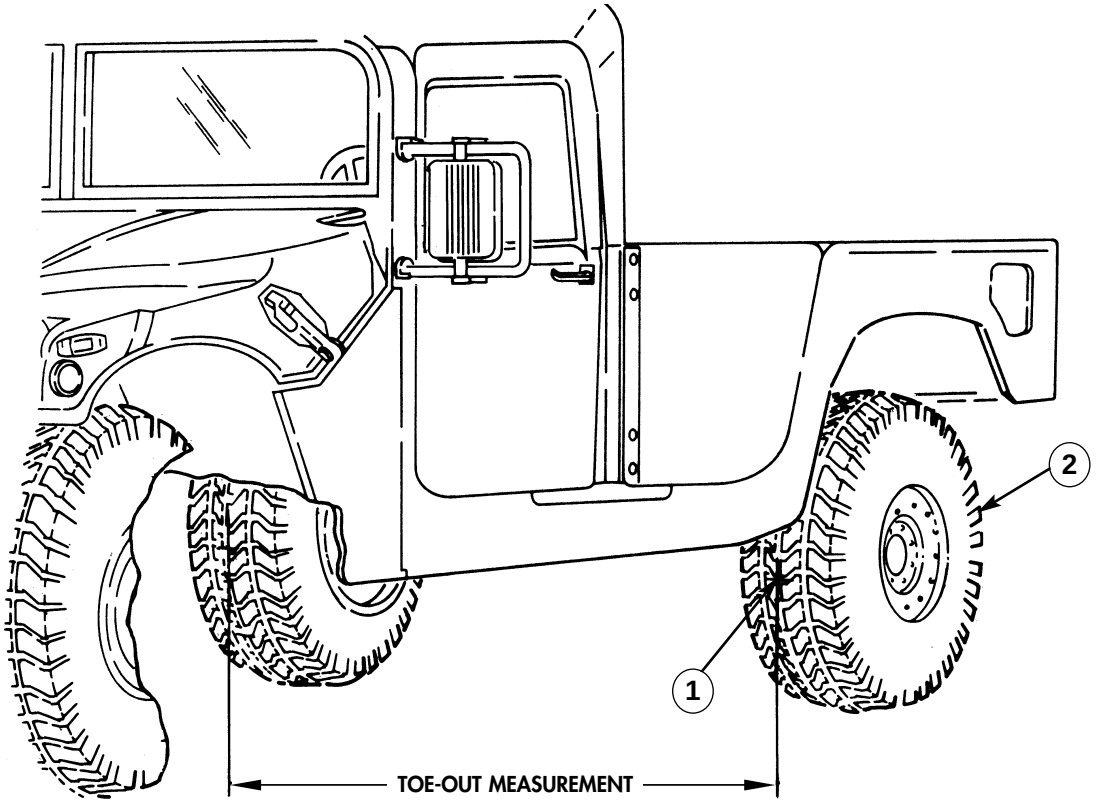

8-10. REAR WHEEL TOE-OUT ALIGNMENT (Cont'd)

c. Toe-out Adjustment

1. Loosen two locknuts (1) and screws (1.1) securing clamps (3) on each adjusting sleeve (2).

NOTE

Toe-out can be increased or decreased by changing length of tie rods. A threaded sleeve is provided for this purpose. Both tie rods must be the same length ± 1/8 in. (3 mm) after adjustment.

2. Turn each adjusting sleeve (2) equally, but in opposite directions.
3. Roll vehicle rearward, then forward, to original position.
4. Repeat toe-out check and adjustment procedures until correct adjustment is indicated.

CAUTION

Ensure bolt and nut on adjusting sleeve clamp nearest to geared hub is facing halfshaft. Bolt and nut on adjusting sleeve clamp nearest to frame must be facing 180° away from stabilizer bar to prevent damage to equipment.

5. Secure two clamps (3) on each adjusting sleeve (2) with two screws (1.1) and locknuts (1). Tighten locknuts (1) to 30 lb-ft (40 N·m).

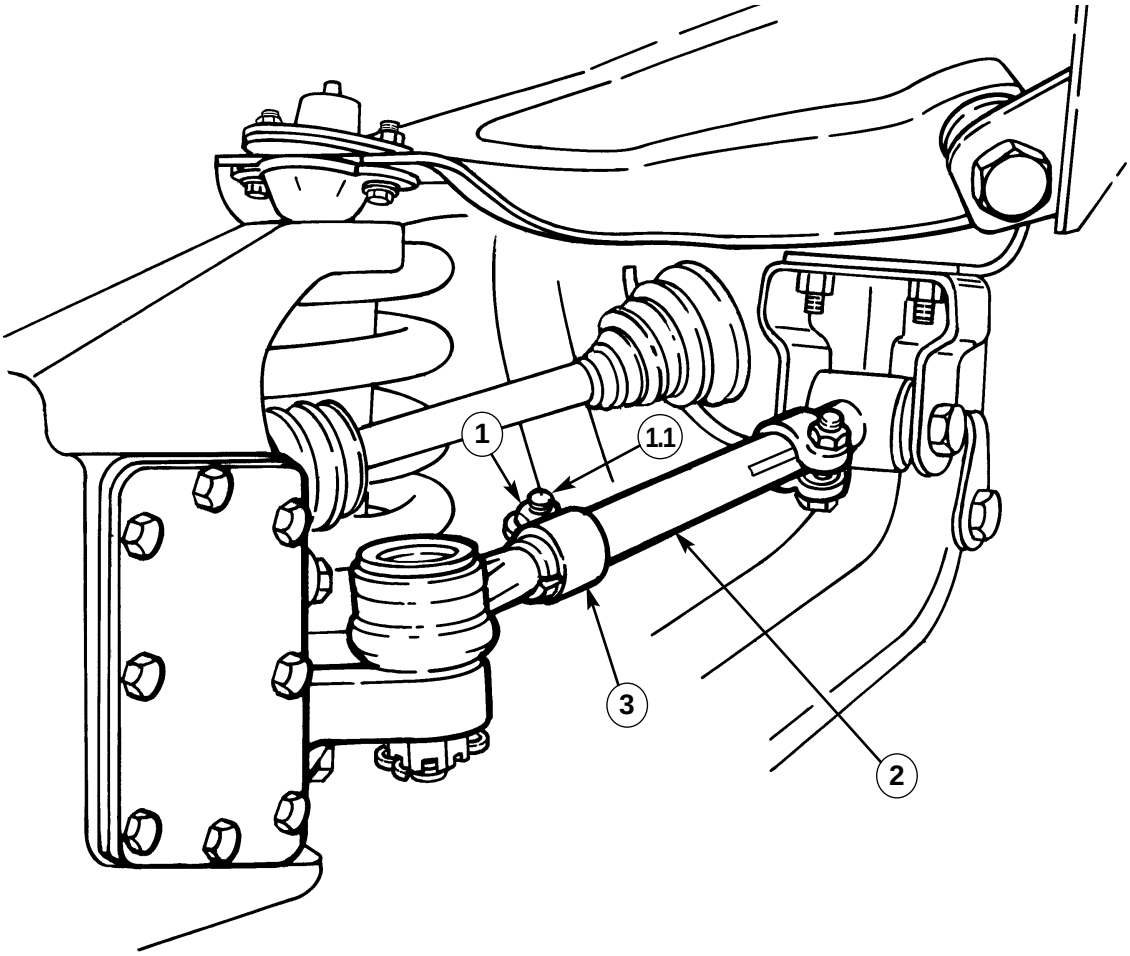

FOLLOW-ON TASK: Operate vehicle (TM 9-2320-387-10) and check for pull or wander.

Section II. STEERING COMPONENTS MAINTENANCE

8-11. STEERING COMPONENTS MAINTENANCE TASK SUMMARY

TASK PARA.	PROCEDURES	PAGE NO.
8-12.	Steering Wheel Replacement	8-36
8-13.	Tie Rod Maintenance	8-37
8-14.	Pitman Arm Replacement	8-40
8-15.	Center Link Replacement	8-42
8-16.	Tie Rod End Replacement	8-44
8-17.	Idler Arm Maintenance	8-46
8-18.	Steering Column Replacement	8-50
8-19.	Intermediate Steering Shaft Replacement	8-54
8-20.	Steering Gear Replacement	8-56
8-21.	Steering Shaft U-Joint Replacement	8-60
8-22.	Intermediate Steering Shaft Close-off and Retainer Replacement	8-62
8-23.	Power Steering Pump and Pulley Replacement	8-64
8-23.1.	Power Steering Pump and Pulley Replacement, Serial Numbers 196901 and Above	8-64.2
8-23.2.	Power Steering Pump Pressure Relief Valve Replacement, Serial Numbers 196901 and Above	8-64.4
8-24.	Power Steering Hydraulic System Pressure and Return Hose Replacement	8-66
8-24.1.	Power Steering Hydraulic System Pressure Hose Replacement, Serial Numbers 196901 and Above	8-66.4
8-25.	Power Steering System Hydraulic Control Valve Maintenance	8-68
8-26.	Power Steering Cooler Hose and Manifold Valve Hoses Replacement	8-72
8-27.	Power Steering System Bleeding (RCSK 18330)	8-74.1
8-27.1.	Power Steering System Bleeding (P/N 94252A)	8-74.2
8-28.	Power Steering Relief Valve Cartridge Maintenance	8-76
8-29.	Power Steering Reservoir and Bracket Replacement (P/N 94252A)	8-78
8-30.	Power Steering Reservoir Filter Replacement (P/N 94252A)	8-82

8-12. STEERING WHEEL REPLACEMENT

This task covers:

a. Removal **b. Installation**

INITIAL SETUP:

Tools
General mechanic's tool kit: automotive (Appendix B, Item 1)
Maintenance and repair shop equipment: automotive (Appendix B, Item 2)
Steering wheel puller (Appendix D, Fig. 108)

Materials/Parts
Nut (Appendix G, Item 69)

Manual References
TM 9-2320-387-24P

Equipment Condition
- Horn switch removed (para. 4-24).
- Cancelling ring removed (para 4-64).

Maintenance Level
Unit

a. Removal

1. Remove nut (2) from steering steering wheel (1) and shaft (3). Discard nut (2).
2. Install capscrews (4) of steering wheel puller (5) in steering wheel (1) and equally tighten capscrews (4) until steering wheel (1) can be removed from shaft (3).

b. Installation

1. Align splines on steering wheel (1) with splines on shaft (3).
2. Install steering wheel (1) on shaft (3) with nut (2). Tighten nut (2) to 35 lb-ft (47 N•m).
3. Peen nut (2).

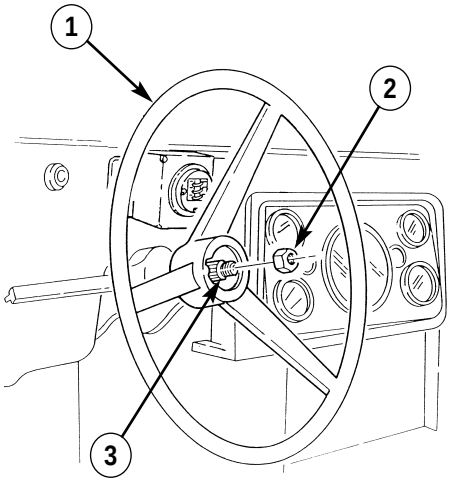

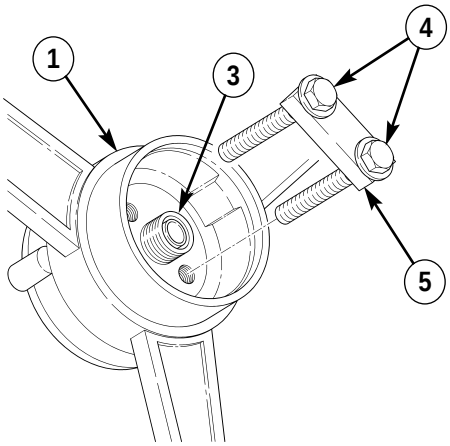

FOLLOW-ON TASKS: • Install horn switch (para. 4-24).
• Install cancelling ring (para. 4-64).

8-13. TIE ROD MAINTENANCE

This task covers:

a. Removal
b. Disassembly
c. Assembly
d. Installation

INITIAL SETUP:

Tools

General mechanic's tool kit:
automotive (Appendix B, Item 1)
Maintenance and repair shop equipment:
automotive (Appendix B, Item 2)
Puller kit (Appendix B, Item 157)

Materials/Parts

Two cotter pins (Appendix G, Item 22)
Two locknuts (Appendix G, Item 125)

Manual References

TM 9-2320-387-10
TM 9-2320-387-24P

Equipment Condition

Front of vehicle raised and supported (para. 8-2).

Maintenance Level

Unit

CAUTION

Using a pickle fork instead of puller kit may damage serviceable components (boots).

a. Removal

1. Remove cotter pin (8) and slotted nut (7) from tie rod (2) and center link (1). Discard cotter pin (8).
2. Remove cotter pin (6), slotted nut (5), washer (4), and tie rod (2) from geared hub (3). Discard cotter pin (6).

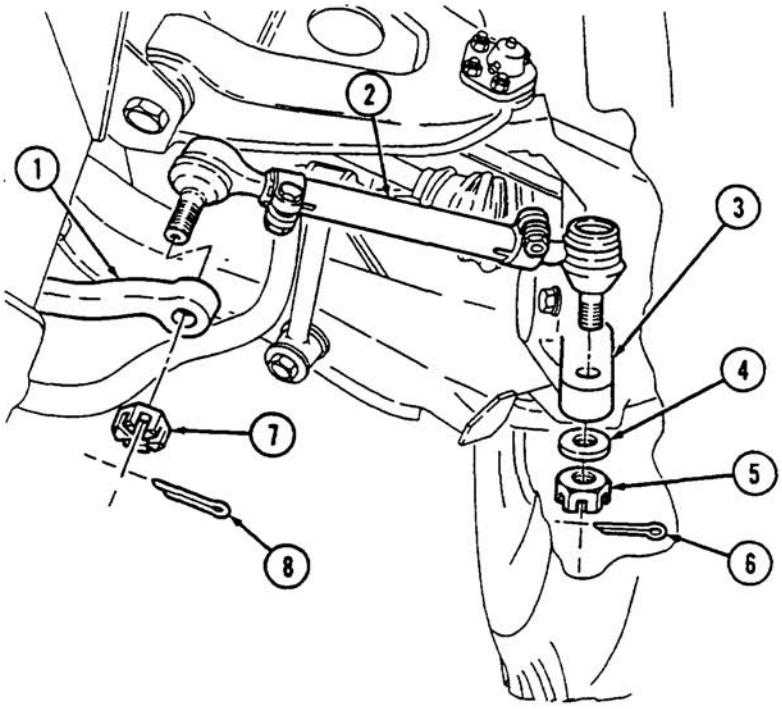

8-13. TIE ROD MAINTENANCE (Cont'd)

b. Disassembly

NOTE

- Disassembly procedures for tie rod and radius rod are basically the same. One tie rod end of the radius rod is different.
- Scribe locating marks on adjusting sleeve and clamps for installation.

1. Loosen two capscrews (10), locknuts (13), and clamps (11) securing tie rod ends (9) to adjusting sleeve (12).

NOTE

Note number of threads exposed on each tie rod end for installation. Approximately the same number of threads should be exposed on each tie rod end.

2. Remove two tie rod ends (9) from adjusting sleeve (12).
3. Remove two locknuts (13), capscrews (10), and clamps (11) from adjusting sleeve (12). Discard locknuts (13).

c. Assembly

1. Install two clamps (11), capscrews (10), and nuts (13) on adjusting sleeve (12).
2. Install two tie rod ends (9) into adjusting sleeve (12), turning tie rod ends (9) equally but in opposite directions.

d. Installation

1. Install tie rod (2) on center link (1) with slotted nut (7). Tighten slotted nut (7) to 70 lb-ft (95 N·m).

CAUTION

Do not loosen slotted nut to install cotter pin. Doing this may result in damage to equipment.

2. Install tie rod (2) on geared hub (3) with washer (4) and slotted nut (5). Tighten slotted nut (5) to 70 lb-ft (95 N·m).
3. Install cotter pin (8) in slotted nut (7).
4. Install cotter pin (6) in slotted nut (5).

CAUTION

Ensure the outboard clamp faces the halfshaft and the inboard clamp faces away from the stabilizer bar (front only) or damage to equipment may result.

5. Tighten two locknuts (13).

8-13. TIE ROD MAINTENANCE (Cont'd)

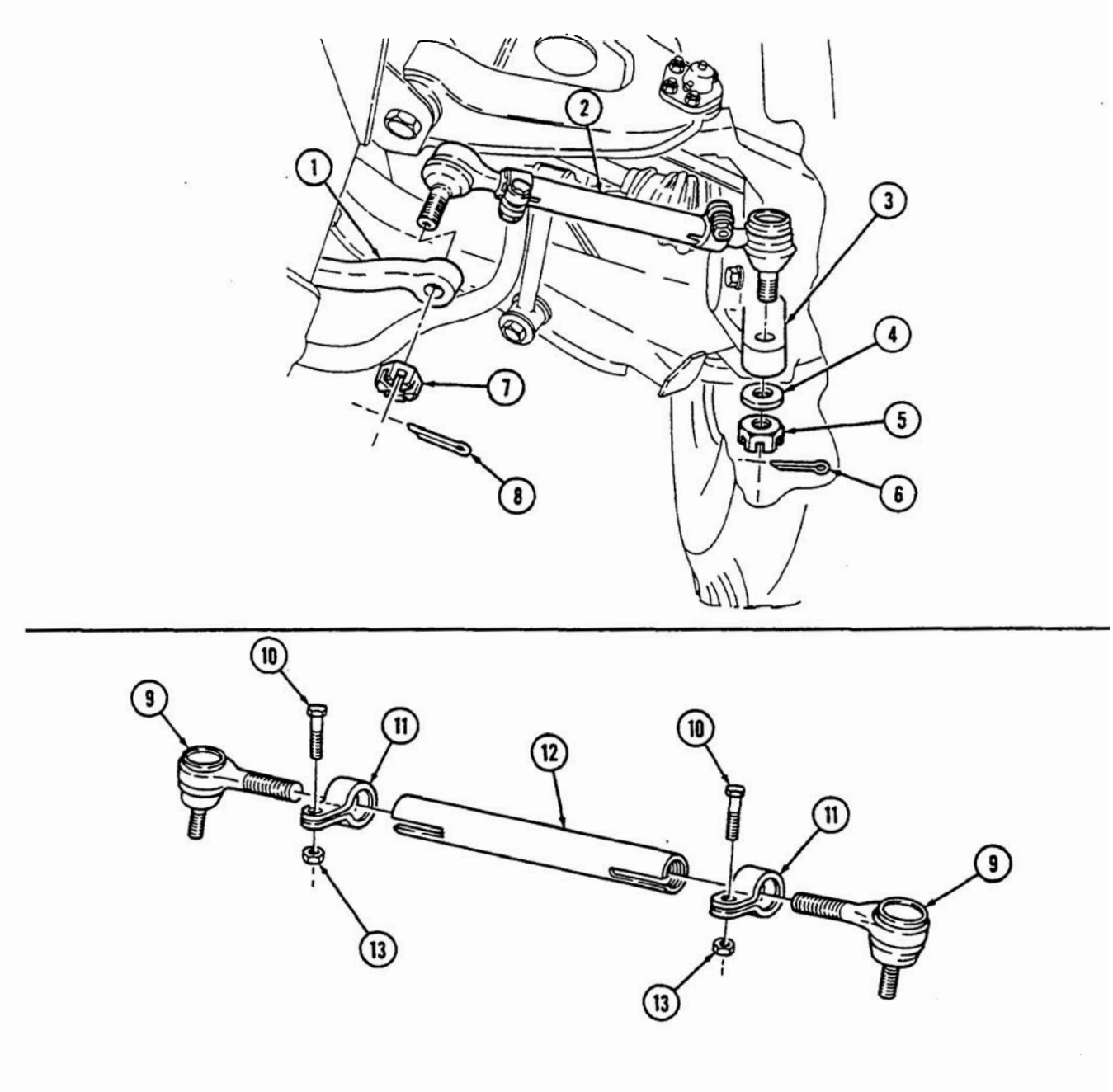

FOLLOW-ON TASKS:
- Lubricate tie rod end (TM 9-2320-387-10).
- Remove supports and lower front of vehicle (para. 8-2).
- Align toe-in (para. 8-9).

8-14. PITMAN ARM REPLACEMENT

This task covers:

a. Removal **b. Installation**

INITIAL SETUP:

Tools
General mechanic's tool kit:
automotive (Appendix B, Item 1)
Maintenance and repair shop equipment:
automotive (Appendix B, Item 2)
Puller kit (Appendix B, Item 157)

Materials/Parts
Cotter pin (Appendix G, Item 22)
Lockwasher (Appendix G, Item 186)

Manual References
TM 9-2320-387-10
TM 9-2320-387-24P

Equipment Condition
Front of vehicle raised and supported (para. 8-2).

Maintenance Level
Unit

NOTE

Ensure front wheels are in straight-ahead position while pitman arm is removed and installed.

a. Removal

1. Remove nut (1) and lockwasher (2) from steering gear shaft (4). Discard lockwasher (2).
2. Using puller, remove pitman arm (3) from steering gear shaft (4).
3. Remove cotter pin (6) and slotted nut (7) from pitman arm (3) and center link (5). Discard cotter pin (6).
4. Using puller, remove pitman arm (3) from center link (5).

b. Installation

1. Install pitman arm (3) on steering gear shaft (4) with lockwasher (2) and nut (1).
2. Install pitman arm (3) on center link (5) with slotted nut (7). Tighten slotted nut (7) to 80 lb-ft (108 N·m).
3. Tighten nut (1) to 185 lb-ft (251 N·m).

CAUTION

Do not loosen slotted nut to install cotter pin. Doing this may result in damage to equipment.

4. Install cotter pin (6) in slotted nut (7).

8-14. PITMAN ARM REPLACEMENT (Cont'd)

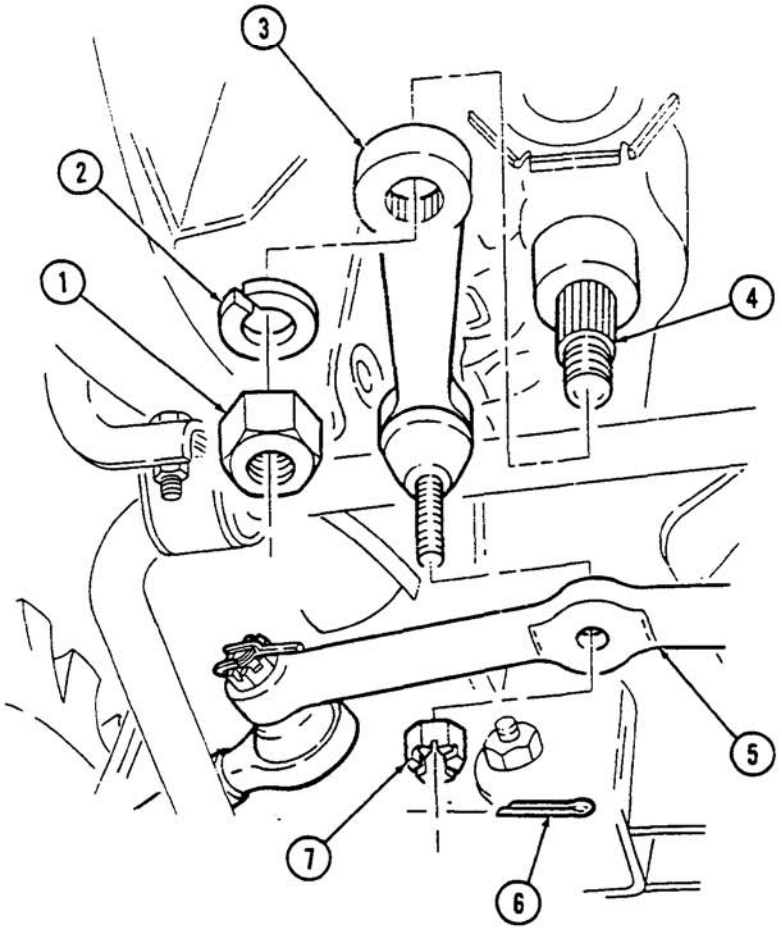

FOLLOW-ON TASKS: • Lubricate pitman arm (TM 9-2320-387-10).
• Remove supports and lower front of vehicle (para. 8-2).

8-15. CENTER LINK REPLACEMENT

This task covers:

a. Removal **b. Installation**

INITIAL SETUP:

Tools

General mechanic's tool kit: automotive (Appendix B, Item 1)
Maintenance and repair shop equipment: automotive (Appendix B, Item 2)
Puller kit (Appendix B, Item 157)

Materials/Parts

Four cotter pins (Appendix G, Item 22)

Manual References

TM 9-2320-387-24P

Equipment Condition

Front of vehicle raised and supported (para. 8-2).

Maintenance Level

Unit

CAUTION

Using a pickle fork instead of puller kit may damage serviceable components (boots).

a. Removal

1. Remove cotter pin (5) and slotted nut (4) from idler arm (8) and center link (3). Discard cotter pin (5).
2. Remove cotter pin (9) and slotted nut (10) from pitman arm (2) and center link (3). Discard cotter pin (9).
3. Remove two cotter pins (1) and slotted nuts (6) from two tie rods (7) and center link (3). Discard cotter pins (1).
4. Using puller, remove center link (3) from two tie rods (7), idler arm (8), and pitman arm (2).

b. Installation

CAUTION

Do not loosen slotted nut to install cotter pin. Doing this may result in damage to equipment

1. Install center link (3) on pitman arm (2) and idler arm (8) with slotted nuts (4) and (10). Tighten slotted nuts (4) and (10) to 80 lb-ft (108 N·m).
2. Install cotter pins (5) and (9) in slotted nuts (4) and (10).
3. Install two tie rods (7) on center link (3) with two slotted nuts (6). Tighten slotted nuts (6) to 70 lb-ft (95 N·m).
4. Install two cotter pins (1) in slotted nuts (6).

8-15. CENTER LINK REPLACEMENT (Cont'd)

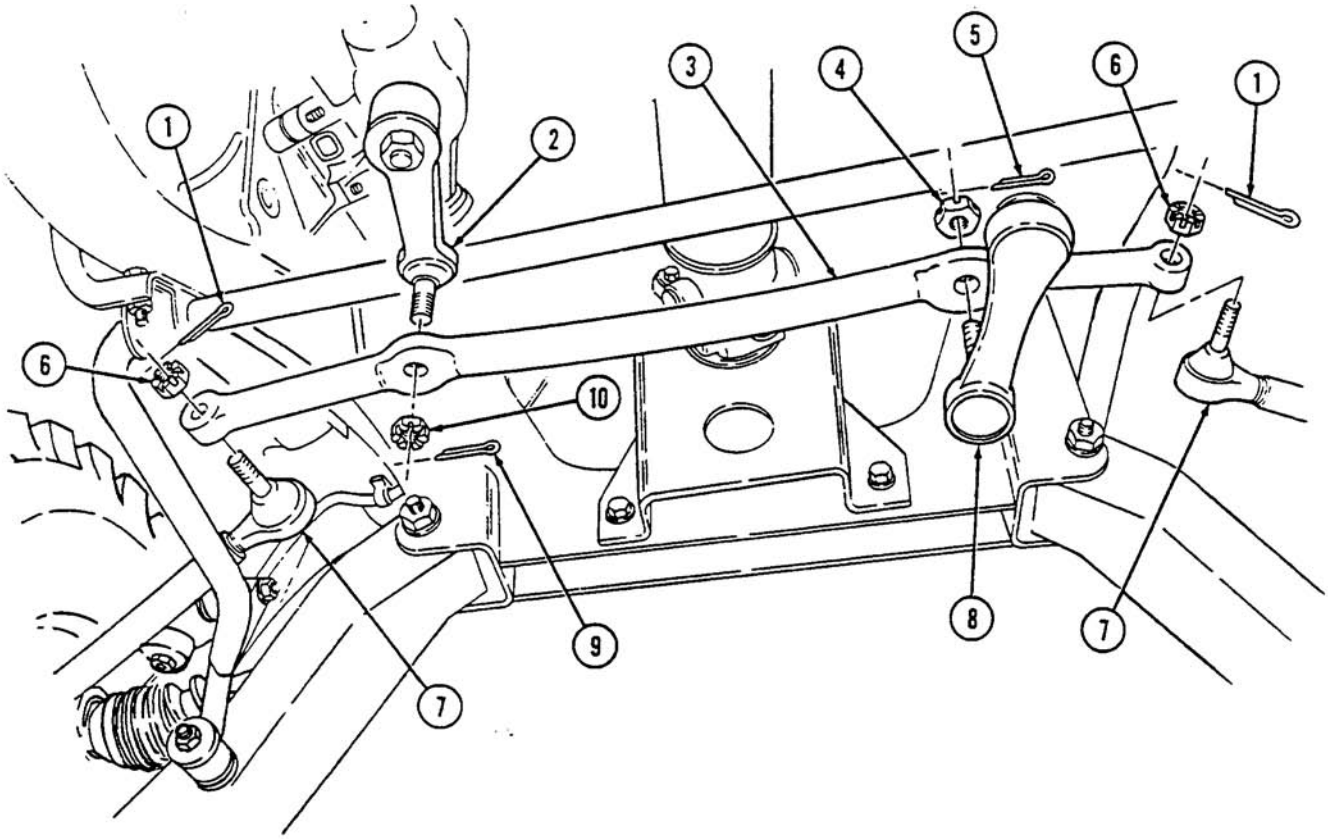

FOLLOW-ON TASK: Remove supports and lower front of vehicle (para. 8-2).

8-16. TIE ROD END REPLACEMENT

This task covers:

a. Removal **b. Installation**

INITIAL SETUP:

Tools

General mechanic's tool kit:
automotive (Appendix B, Item 1)
Maintenance and repair shop equipment:
automotive (Appendix B, Item 2)
Puller kit (Appendix B, Item 157)

Materials/Parts

Cotter pin (Appendix G, Item 22)

Manual References

TM 9-2320-387-10
TM 9-2320-387-24P

Equipment Condition

Front of vehicle raised and supported (para. 8-2).

Maintenance Level

Unit

a. Removal

1. Remove cotter pin (8), slotted nut (7), and washer (6) from tie rod end (4) and geared hub (5). Discard cotter pin (8).
2. Using puller, remove tie rod end (4) from geared hub (5).

NOTE

Note number of threads exposed on each tie rod end for installation. Approximately the same number of threads should be exposed on each tie rod end.

3. Loosen nut (9), capscrew (3), clamp (2), and tie rod end (4) from adjusting sleeve (1).

b. Installation

CAUTION

Ensure clamp faces halfshaft or damage to equipment may result.

1. Install tie rod end (4) into sleeve (1) with clamp (2), capscrew (3), and nut (9).

CAUTION

Do not loosen slotted nut to install cotter pin. Doing this may result in damage to equipment.

2. Install tie rod end (4) on geared hub (5) with washer (6) and slotted nut (7). Tighten slotted nut (7) to 70 lb-ft (95 N·m).
3. Install cotter pin (8) in slotted nut (7).

8-16. TIE ROD END REPLACEMENT (Cont'd)

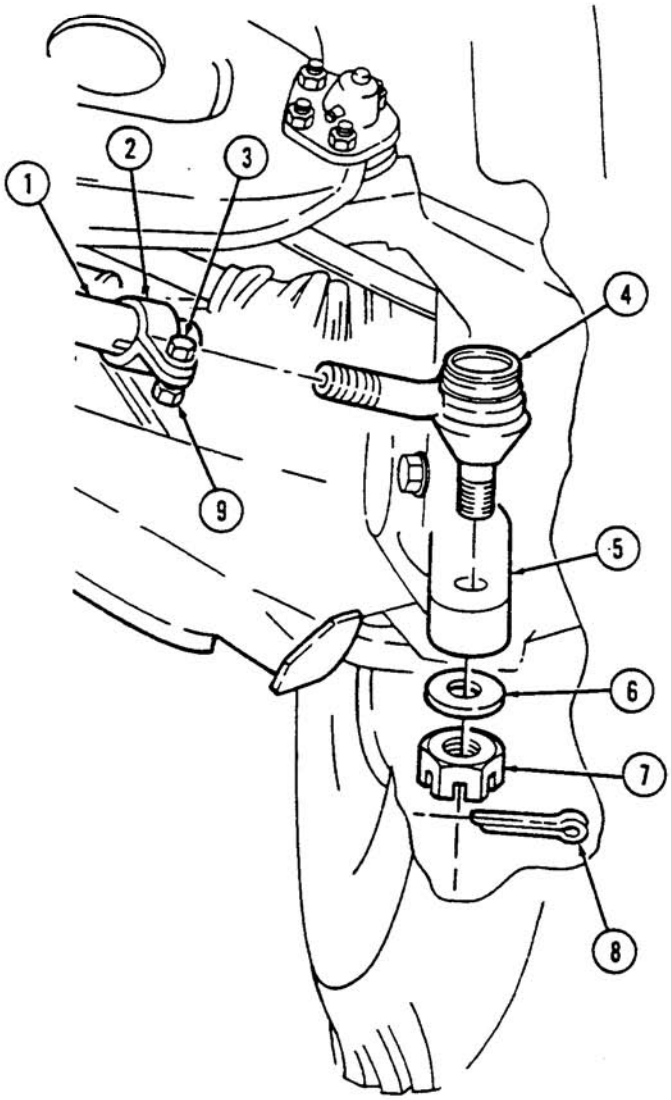

FOLLOW-ON TASKS:
- Lubricate tie rod end (TM 9-2320-387-10).
- Remove supports and lower front of vehicle (para. 8-2).
- Align toe-in (para. 8-9).

8-17. IDLER ARM MAINTENANCE

This task covers:

a. Inspection
b. Removal
c. Installation

INITIAL SETUP:

Tools

General mechanic's tool kit: automotive (Appendix B, Item 1)
Maintenance and repair shop equipment: automotive (Appendix B, Item 2)
Puller kit (Appendix B, Item 157)
Spring scale, dial indicating (Appendix B, Item 2)

Materials/Parts

Cotter pin (Appendix G, Item 22)

Manual References

TM 9-2320-387-10
TM 9-2320-387-24P

Equipment Condition

Front of vehicle raised and supported (para. 8-2).

Maintenance Level

Unit

a. Inspection

NOTE

Set front wheels in a straight-ahead position.

1. Check idler arm (5) for visible damage, such as breaks and cracks. If damaged, replace idler arm (5).
2. Check capscrews (4) for looseness of idler arm bracket (3) on frame (6). Tighten capscrews (4) if loose.

NOTE

A flat steel plate or piece of scrap metal is required for step 3.

3. Secure a flat steel plate or piece of scrap metal to front crossmember (2).
4. Pull center link (1) downward to seat ball and socket of idler arm (5).
5. Using flat surface on center link (1) as a guide, mark first reference line on steel plate or scrap metal, as shown in figure A.
6. Position spring scale (7) on center link (1) and pull in an upward direction to obtain a 25 lb (11 kg) reading on spring scale (7).

NOTE

Maintain 25 lb (11 kg) reading on spring scale to perform step 7.

7. Using flat surface on center link (1) as a guide, mark second reference line on steel plate or scrap metal, as shown in figure B.
8. Remove spring scale (7) from center link (1).
9. Remove clamp and steel plate or scrap metal from front crossmember (2).
10. Measure distance between first and second reference lines on steel plate or scrap metal. If measurement exceeds 0.25 in. (6mm), replace idler arm (5).

8-17. IDLER ARM MAINTENANCE (Cont'd)

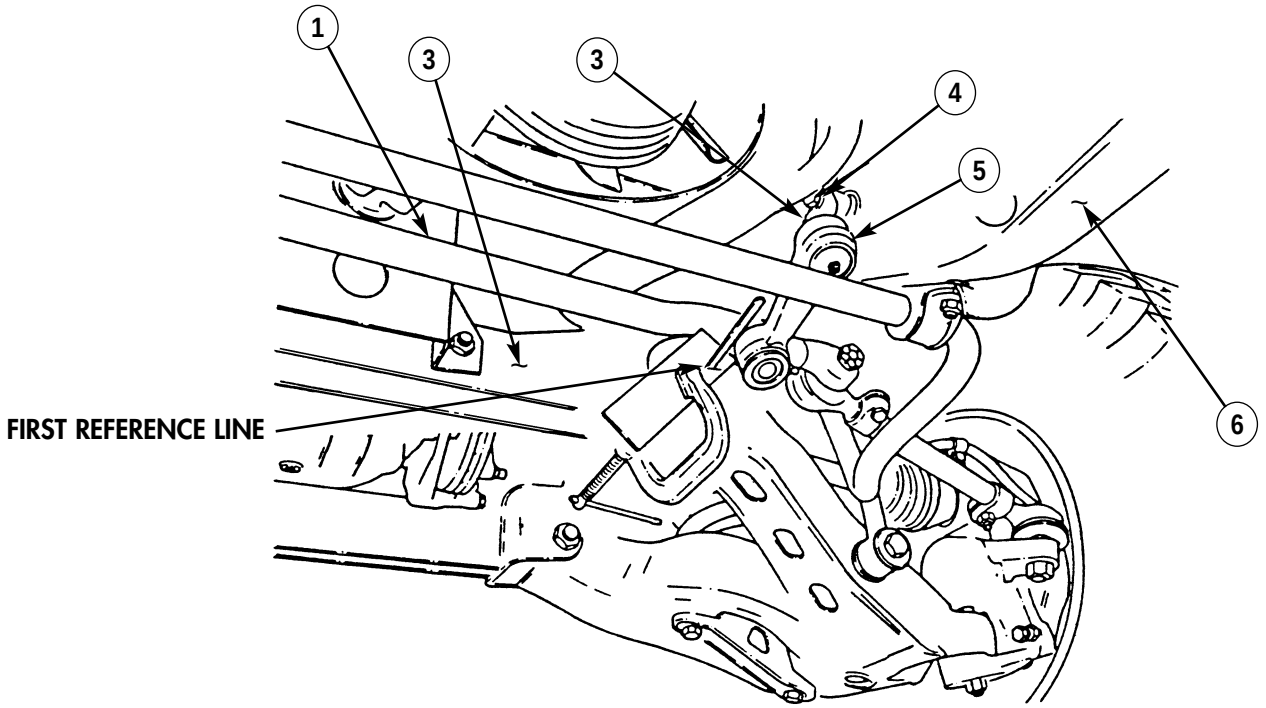

Figure A

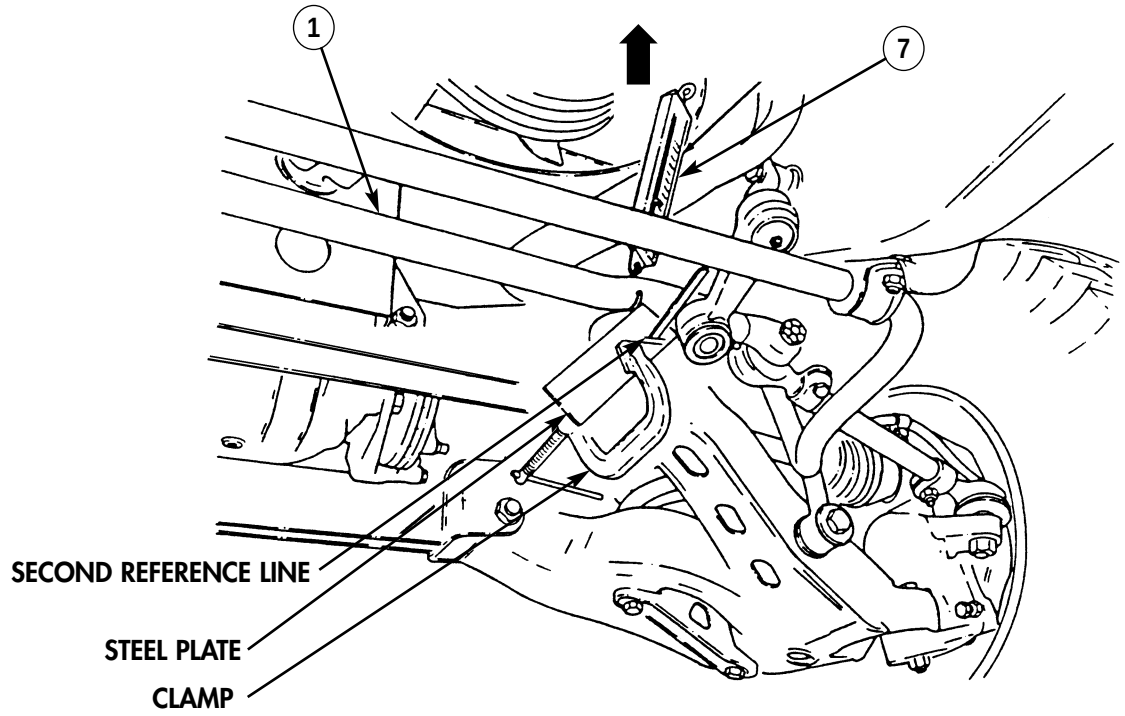

Figure B

8-17. IDLER ARM MAINTENANCE (Cont'd)

b. Removal

1. Remove cotter pin (1) and slotted nut (8) from idler arm (7) and center link (2). Discard cotter pin (1).
2. Using puller, disconnect center link (2) from idler arm (7).
3. Remove two nuts (6), washers (4), capscrews (3), washers (4), and idler arm (7) from frame (5).

c. Installation

1. Install idler arm (7) on frame (5) with two washers (4), capscrews (3), washers (4), and nuts (6). Tighten nuts (6) to 60 lb-ft (81 N·m).
2. Install idler arm (7) on center link (2) with slotted nut (8). Tighten slotted nut (8) to 80 lb-ft (108 N·m).

CAUTION

Do not loosen slotted nut to install cotter pin. Doing this may result in damage to equipment.

3. Install cotter pin (1) in slotted nut (8).

8-17. IDLER ARM MAINTENANCE (Cont'd)

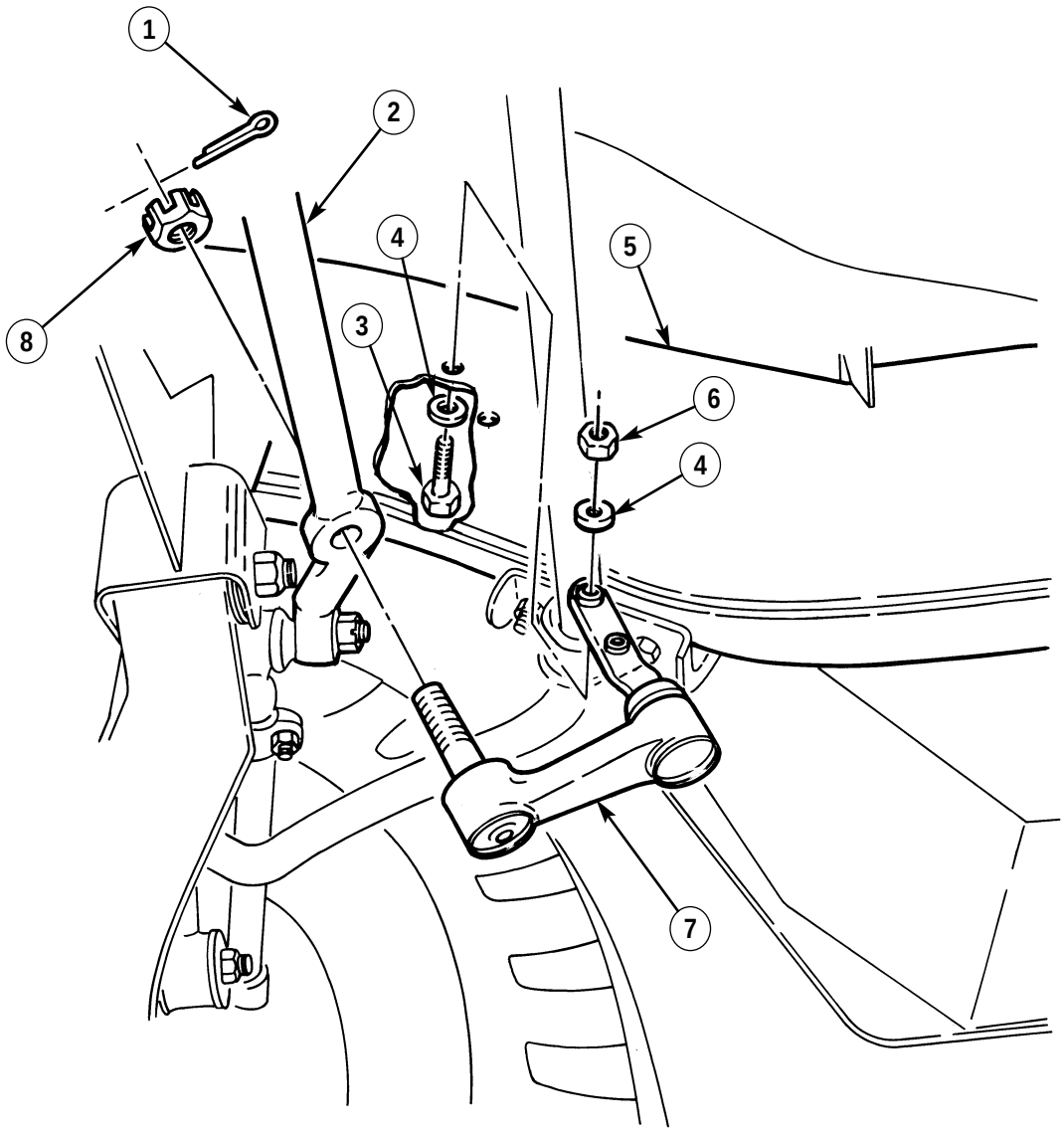

FOLLOW-ON TASKS: • Lubricate idler arm (TM 9-2320-387-10).
• Remove supports and lower front of vehicle (para. 8-2).

8-18. STEERING COLUMN REPLACEMENT

This task covers:

a. Removal **b. Installation**

INITIAL SETUP:

Tools

General mechanic's tool kit: automotive (Appendix B, Item 1)
Maintenance and repair shop equipment: automotive (Appendix B, Item 2)

Materials/Parts

Two locknuts (Appendix G, Item 82)
Locknut (Appendix G, Item 106)
Locknut (Appendix G, Item 101)
Locknut (Appendix G, Item 90)
Lockwasher (Appendix G, Item 144)
Nut and lockwasher assembly (Appendix G, Item 197)

Manual References

TM 9-2320-387-24P

Equipment Condition

- Steering wheel removed (para. 8-12).
- Directional signal control removed (para. 4-63).

Maintenance Level

Unit

a. Removal

1. Remove locknut (1), lockwasher (2), washer (3), and pin (5) from steering column (6) and mounting bracket (4). Discard lockwasher (2) and locknut (1).
2. Remove nut and lockwasher assembly (17), screw (7), and ground wire 57C (8) from steering column (6). Discard nut and lockwasher assembly (17).
3. Remove locknut (10), washer (11), capscrew (13), washer (11), and two brackets (9) from steering column (6). Discard locknut (10).
4. Disconnect lead 25A (21) from steering column (6).

NOTE

When performing step 5, temporarily install steering wheel and turn steering column to gain access to steering column intermediate shaft mounting hardware.

5. Remove locknut (12), washer (14), capscrew (15), washer (14), and intermediate shaft (16) from steering column (6). Discard locknut (12).
6. Remove two locknuts (20), washers (18), screws (19), washers (18), and steering column (6) from mounting bracket (4). Discard locknuts (20).

8-18. STEERING COLUMN REPLACEMENT (Cont'd)

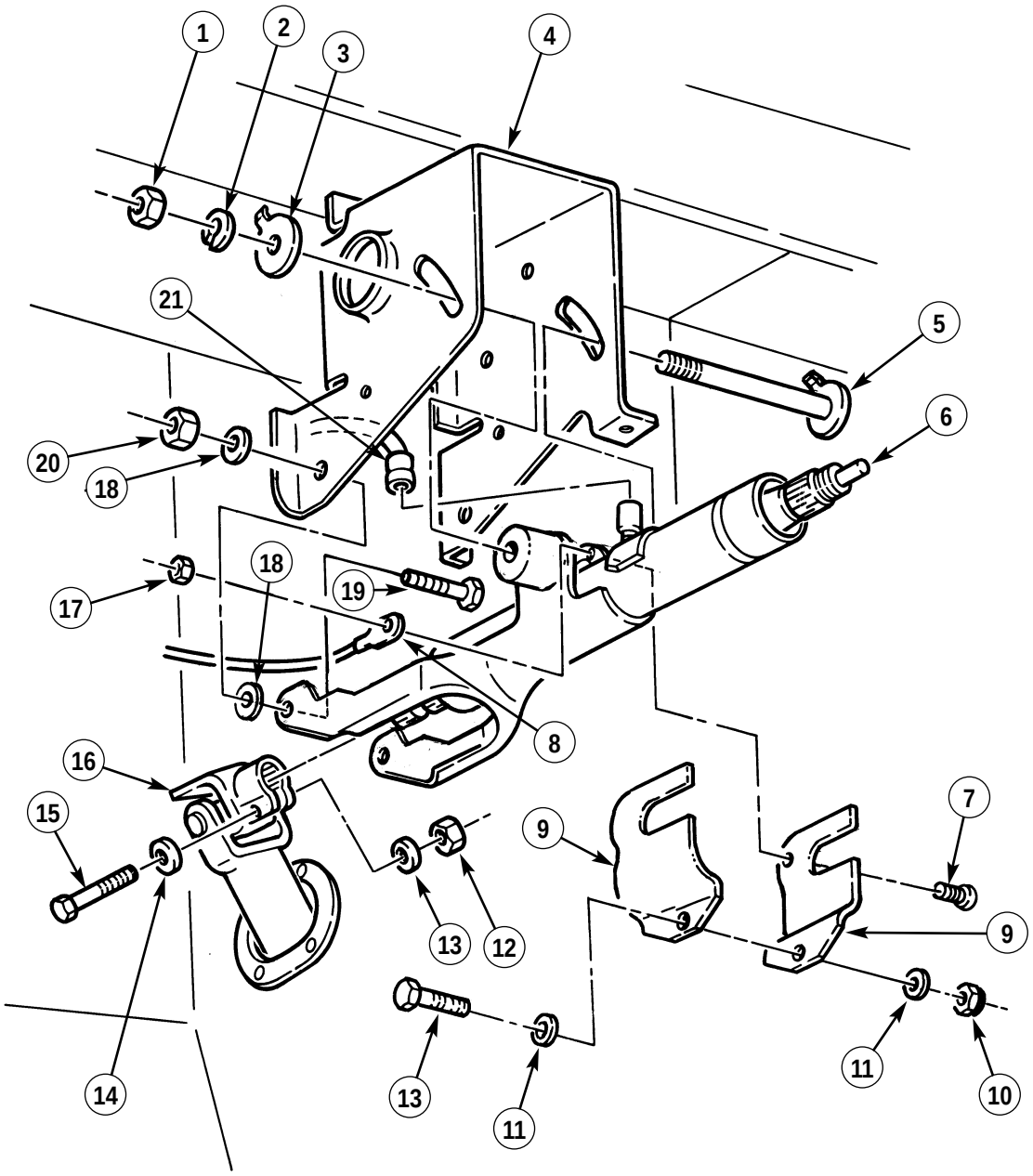

8-18. STEERING COLUMN REPLACEMENT (Cont'd)

b. Installation

1. Install steering column (6) on mounting bracket (4) with two washers (18), screws (19), washers (18), and locknuts (20). Tighten locknuts (20) finger-tight.
2. Install intermediate shaft (16) on steering column (6) with washer (14), capscrew (15), washer (14), and locknut (12). Tighten locknut (12) to 40-50 lb-ft (54-68 N·m).
3. Connect lead 25A (21) to steering column (6).
4. Install two brackets (9) on steering column (6) with washer (11), capscrew (13), washer (11), and locknut (10).
5. Install ground wire 57C (8) on steering column (6) with screw (7) and nut and lockwasher assembly (17).

NOTE

Ensure washer and pin locking tabs are in the UP position.

6. Install steering column (6) on mounting bracket (4) with pin (5), washer (3), lockwasher (2), and locknut (1). Tighten locknut (1) finger-tight.
7. Position steering column (6) in upright position and tighten locknut (1) to 12-15 lb-ft (16-20 N·m).
8. Tighten two locknuts (20) to 12-15 lb-ft (16-20 N·m).

8-18. STEERING COLUMN REPLACEMENT (Cont'd)

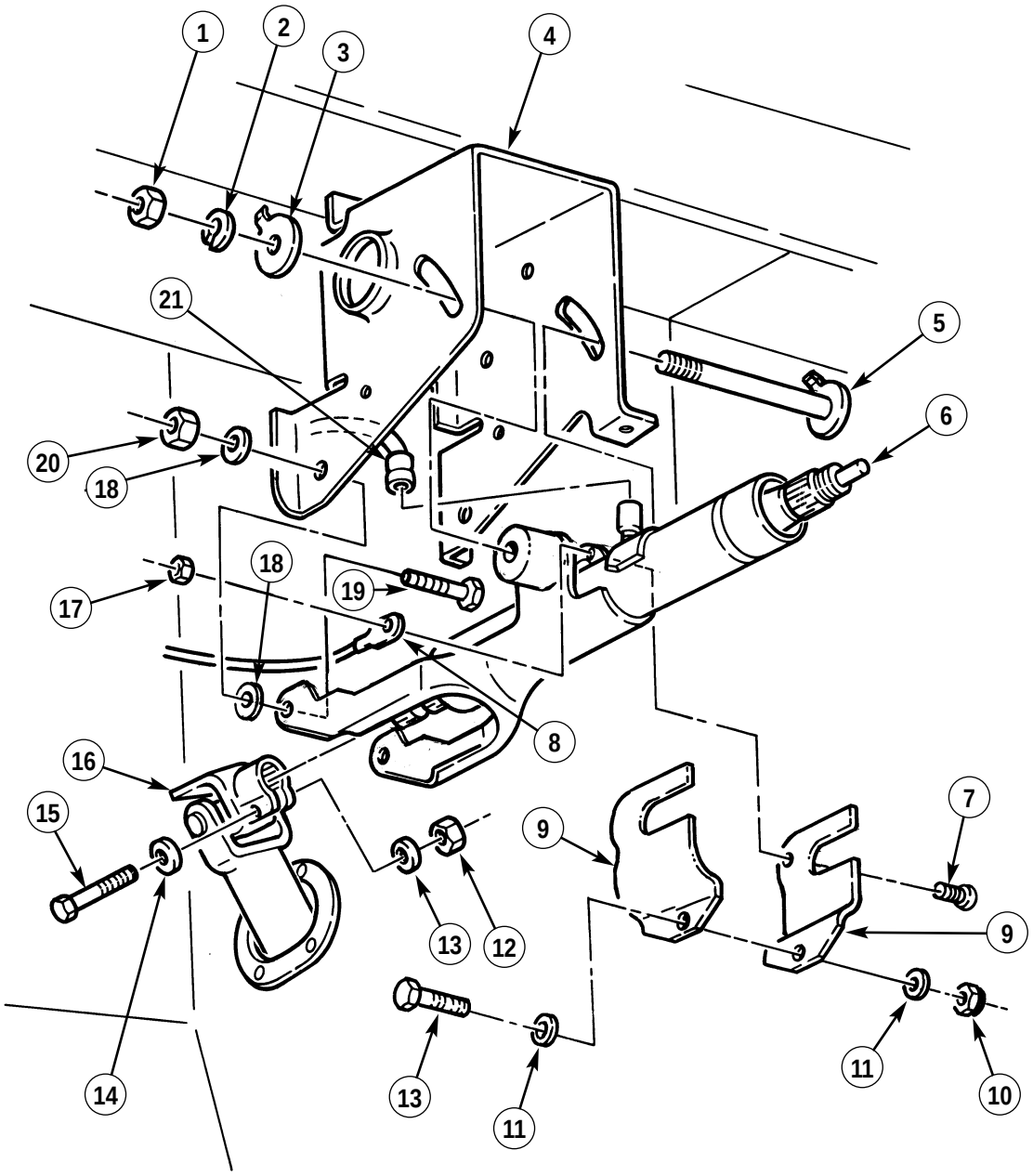

FOLLOW-ON TASKS: • Install directional signal control (para. 4-63).
• Install steering wheel (para. 8-12).

8-19. INTERMEDIATE STEERING SHAFT REPLACEMENT

This task covers:

a. Removal **b. Installation**

INITIAL SETUP:

Tools

General mechanic's tool kit: automotive (Appendix B, Item 1)
Maintenance and repair shop equipment: automotive (Appendix B, Item 2)

Materials/Parts

Two locknuts (Appendix G, Item 90)

Manual References

TM 9-2320-387-10
TM 9-2320-387-24P

Maintenance Level

Unit

NOTE

Ensure front wheels are in straight-ahead position while removing and installing intermediate steering shaft.

a. Removal

1. Remove locknut (6), washer (5), capscrew (8), and washer (5) from intermediate steering shaft (4) and steering gear (7). Discard locknut (6).
2. Remove locknut (2), washer (3), capscrew (9), washer (3), and steering shaft (4) from steering column (1). Discard locknut (2).

b. Installation

1. Install intermediate steering shaft (4) on steering gear (7) with washer (5), capscrew (8), washer (5), and locknut (6). Tighten locknut (6) to 40-50 lb-ft (54-68 N·m).
2. Install steering shaft (4) on steering column (1) with washer (3), capscrew (9), washer (3), and locknut (2). Tighten locknut (2) to 40-50 lb-ft (54-68 N·m).

8-19. INTERMEDIATE STEERING SHAFT REPLACEMENT (Cont'd)

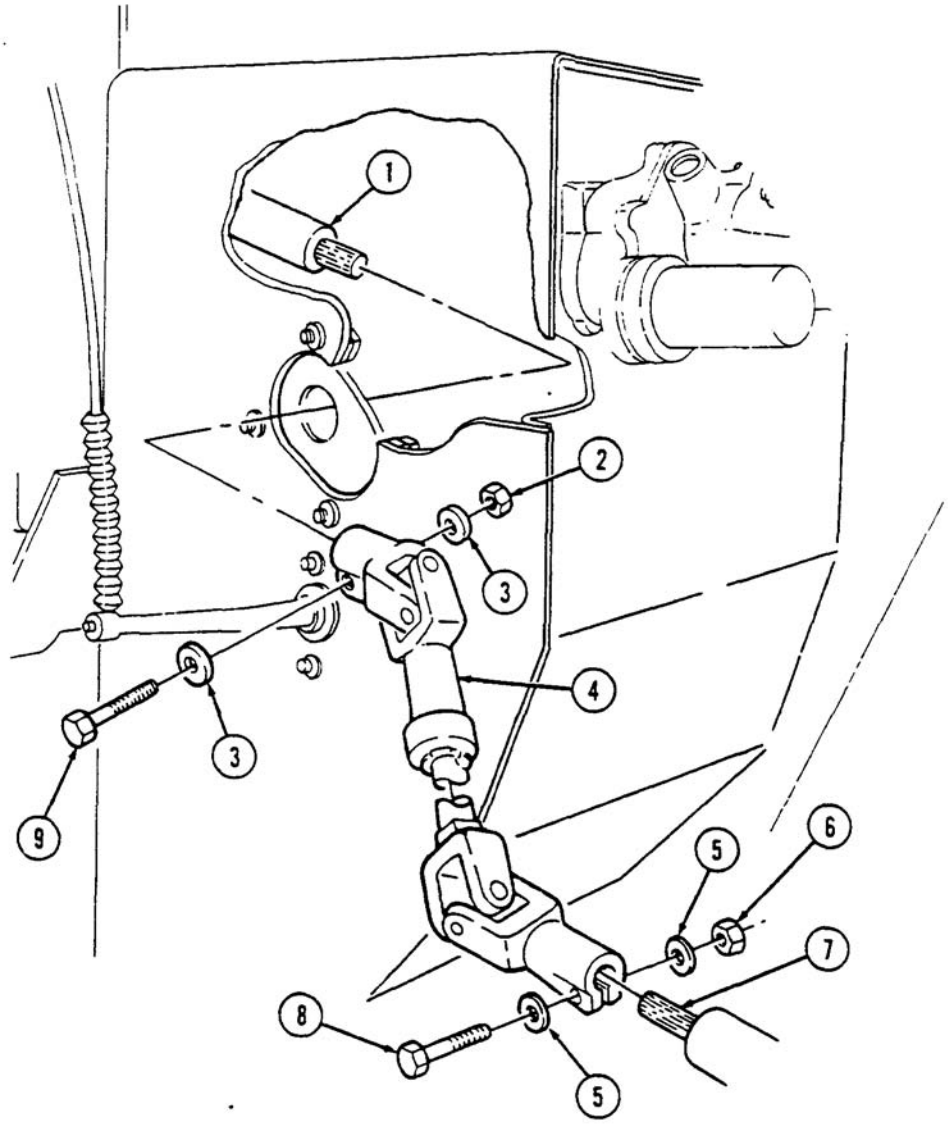

FOLLOW-ON TASK: Lubricate steering shaft (TM 9-2320-387-10).

8-20. STEERING GEAR REPLACEMENT

This task covers:

a. Removal **b. Installation**

INITIAL SETUP:

Tools

General mechanic's tool kit:
automotive (Appendix B, Item 1)
Maintenance and repair shop equipment:
automotive (Appendix B, Item 2)

Materials/Parts

Locknut (Appendix G, Item 90)
Lockwasher (Appendix G, Item 186)
Three lockwashers (Appendix G, Item 182)

Manual References

TM 9-2320-387-10
TM 9-2320-387-24P

Equipment Condition

- Hood raised and secured (TM 9-2320-387-10).
- Battery ground cables disconnected (para. 4-68).

Maintenance Level

Unit

a. Removal

CAUTION

Cover or plug all open lines and connections immediately after disconnection to prevent contamination. Remove all covers or plugs prior to connection.

NOTE

- Ensure front wheels are in the straight-ahead position.
- Have drainage container ready to catch fluid.

1. Disconnect two power steering lines (4) from steering gear (10).
2. Turn steering wheel left and right several times to bleed off power steering fluid.
3. Remove intermediate shaft locknut (1), washer (2), capscrew (5), and washer (2) and disconnect intermediate shaft (3) from steering gear (10). Discard locknut (1).
4. Remove nut (14) and lockwasher (13) from pitman arm (12). Discard lockwasher (13).
5. Remove pitman arm (12) from shaft (11).
6. Remove three capscrews (8), lockwashers (7), washers (6), and steering gear (10) from frame (9). Discard lockwashers (7).

8-20. STEERING GEAR REPLACEMENT (Cont'd)

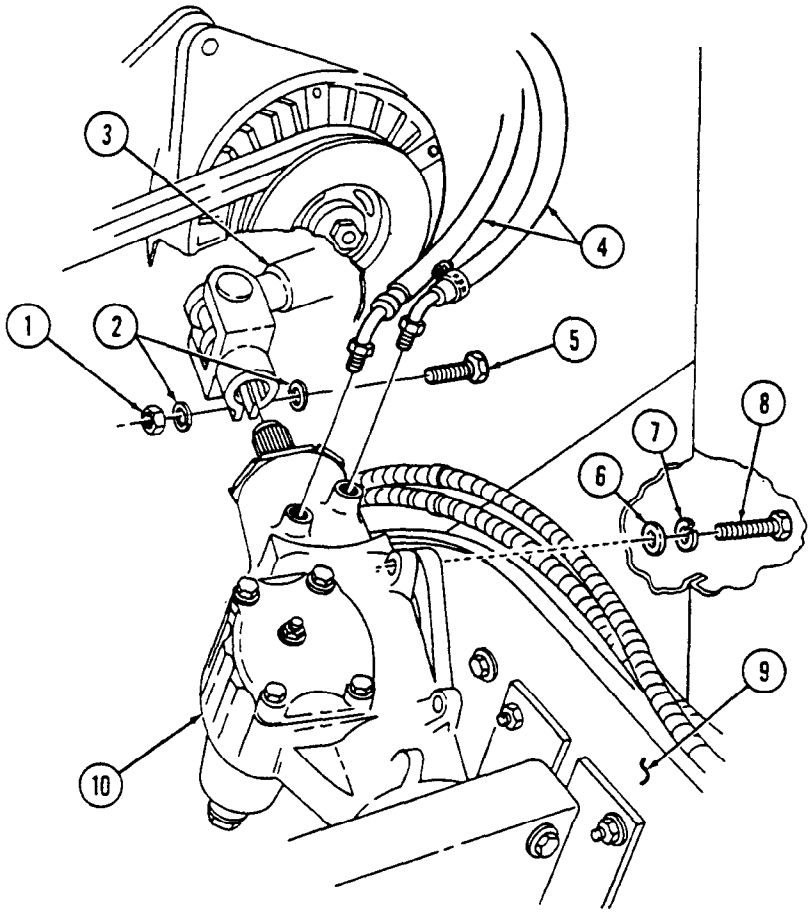

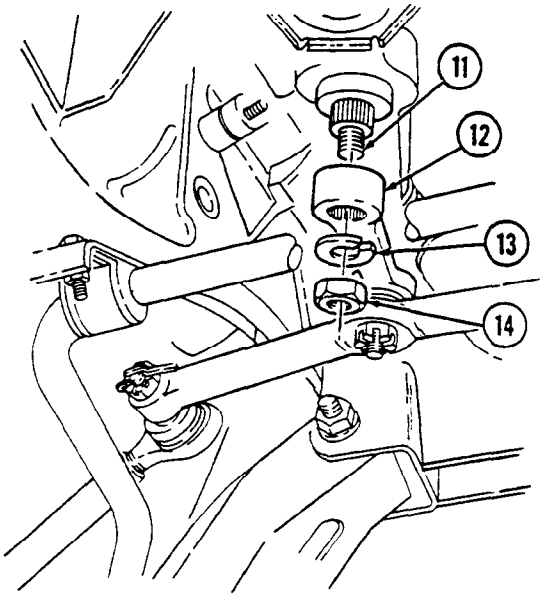

8-20. STEERING GEAR REPLACEMENT (Cont'd)

b. Installation

1. Install steering gear (12) on frame (11) with three washers (8), lockwashers (9), and capscrews (10). Tighten capscrews (10) to 54-66 lb-ft (73-89 N•m).
2. Align hole in yoke (3) with notch on steering gear splines (7) and slide intermediate shaft (4) on steering gear splines (7).
3. Install intermediate shaft (4) to steering gear splines (7) with washer (2), capscrew (6), washer (2), and locknut (1). Tighten locknut (1) to 40-50 lb-ft (54-68 N•m).
4. Connect two power steering lines (5) to steering gear (12).

NOTE

Ensure front wheels are in the straight-ahead position.

5. Install pitman arm (14) on shaft (13) with lockwasher (15) and nut (16). Tighten nut (16) to 185 lb-ft (251 N•m).

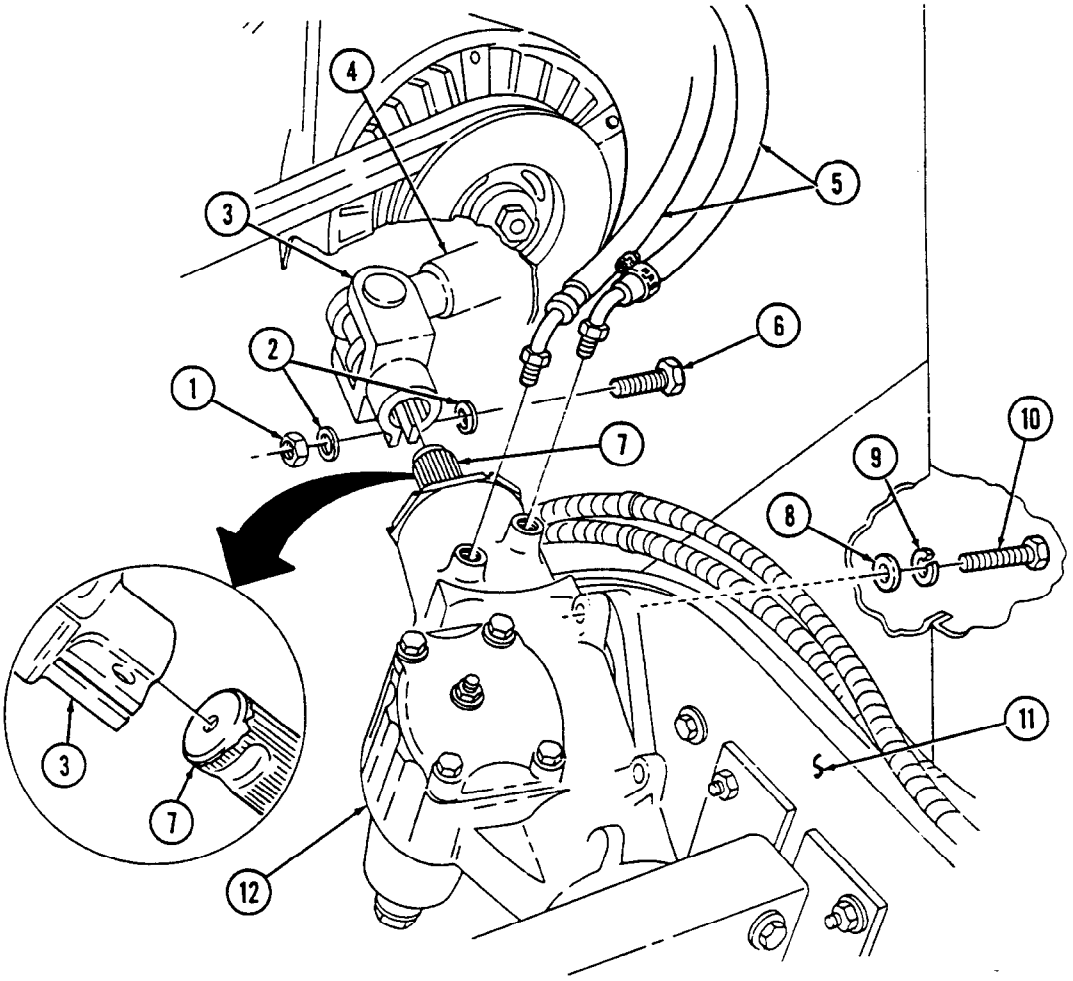

8-20. STEERING GEAR REPLACEMENT (Cont'd)

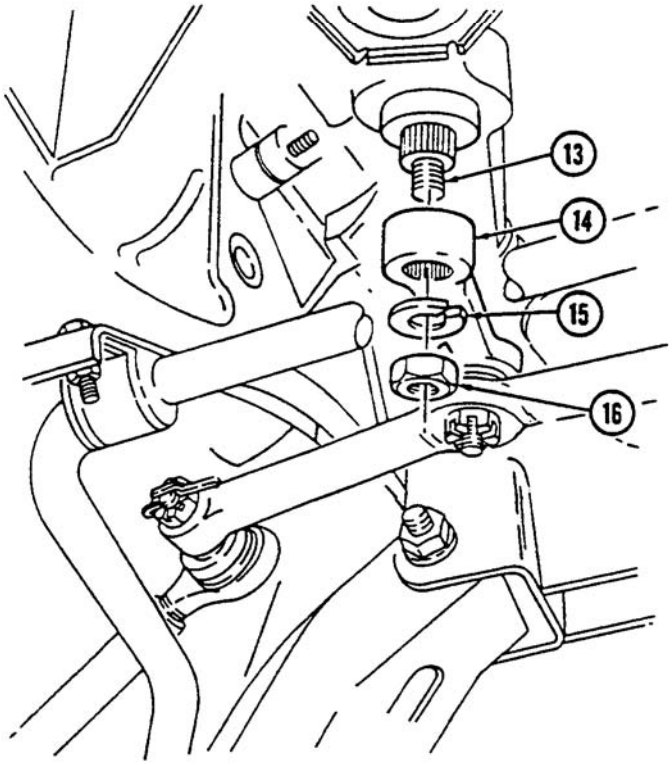

FOLLOW-ON TASKS:
- Fill power steering reservoir (TM 9-2320-387-10).
- Connect battery ground cables (para. 4-68).
- Bleed power steering system (para. 8-27).

8-21. STEERING SHAFT U-JOINT REPLACEMENT

This task covers:

a. Removal **b. Installation**

INITIAL SETUP:

Tools
General mechanic's tool kit: automotive (Appendix B, Item 1)
Universal joint bearing kit (Appendix B, Item 161)

Materials/Parts
Center parts kit (Appendix G, Item 10)

Manual References
TM 9-2320-387-24P

Equipment Condition
Intermediate steering shaft removed (para. 8-19).

Maintenance Level
Unit

a. Removal

CAUTION

Do not drop bearing cups. Needle bearings can be easily lost.

NOTE

Removal and installation procedures are basically the same for both U-joints. This procedure covers the U-joint attached to steering gear.

1. Remove grease fitting (6) from cross (1).
2. Remove two snaprings (3) from bearing cups (4) in steering gear yoke (5).
3. Position steering gear yoke (5) in vise with 1-1/8-in. socket between vise jaw and bearing cup (4) being removed. Ensure open end of socket is facing bearing cup (4).
4. Place 11/16-in. socket between opposite bearing cup (4) and vise jaw. Ensure open end of socket is facing vise jaw.
5. Press bearing cup (4) out of steering gear yoke (5) and remove bearing cup (4) from cross (1).
6. Reverse position of sockets and press remaining bearing cup (4) out of steering gear yoke (5).
7. Remove steering gear yoke (5) from cross (1).
8. Repeat steps 2 through 6 for steering shaft yoke (2).
9. Remove cross (1) from steering shaft yoke (2).

b. Installation

1. Install cross (1) into steering shaft yoke (2).
2. Install bearing cup (4) into steering shaft yoke (2).

CAUTION

Ensure bearing cup is aligned with steering shaft yoke before pressing in with vise. Damage to cross and bearing cups will result if forced into yoke.

3. Place steering shaft yoke (2) in vise with 11/16-in. socket between vise jaw and bearing cup (4).
4. Press bearing cup (4) into steering shaft yoke (2) far enough to install snapring (3) and install snapring (3) on bearing cup (4).
5. Install other bearing cup (4) into steering shaft yoke (2).
6. Place steering shaft yoke (2) in vise with 11/16-in. socket between bearing cup (4) and vise jaw.
7. Press bearing cup (4) into steering shaft yoke (2) far enough to install snapring (3) and install snapring (3) on bearing cup (4).

8-21. STEERING SHAFT U-JOINT REPLACEMENT (Cont'd)

8. Repeat steps 2 through 7 to install steering gear yoke (5) on cross (1).

CAUTION

Ensure grease fitting on cross faces steering shaft. Damage to equipment will result if improperly installed.

9. Install grease fitting (6) into cross (1).

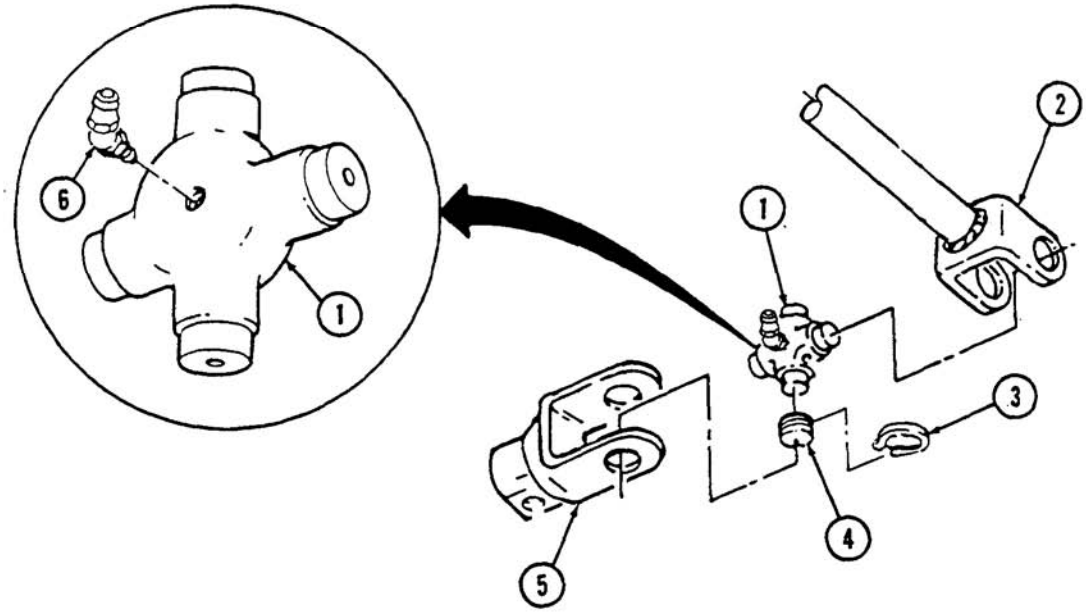

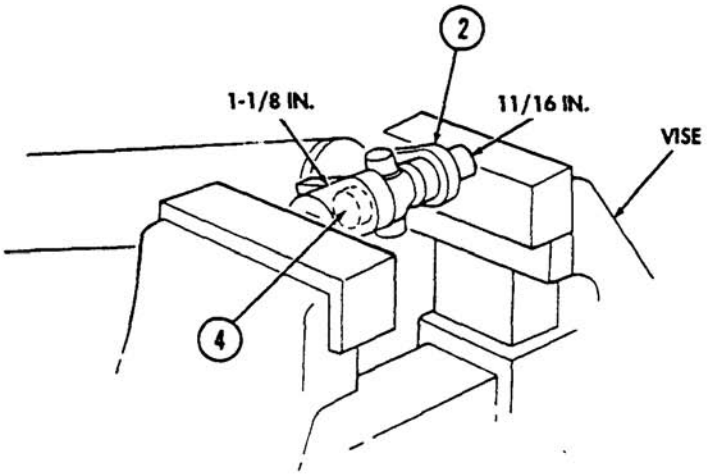

FOLLOW-ON TASK: Install intermediate steering shaft (para. 8-19).

8-22. INTERMEDIATE STEERING SHAFT CLOSE-OFF AND RETAINER REPLACEMENT

This task covers:

a. Removal **b. Installation**

INITIAL SETUP:

Tools
General mechanic's tool kit:
automotive (Appendix B, Item 1)
Maintenance and repair shop equipment:
automotive (Appendix B, Item 2)

Materials/Parts
Four locknuts (Appendix G, Item 77)
Locknut (Appendix G, Item 90)

Personnel Required
One mechanic
One assistant

Manual References
TM 9-2320-387-24P

Maintenance Level
Unit

NOTE

Perform steps a.1 and b.2 only when replacing close-off retainer. Close-off may be replaced without disconnecting intermediate steering shaft.

a. Removal

1. Remove locknut (8), washer (9), capscrew (11), and washer (9) and disconnect intermediate steering shaft (10) from steering column (2). Discard locknut (8).
2. Remove four locknuts (12), washers (6), capscrews (5), and washers (6) from hand throttle bracket (7), close-off retainer (4), close-off (3), and cowl panel (1). Remove close-off retainer (4) and close-off (3) from steering shaft (10). Discard locknuts (12).

b. Installation

1. Install close-off (3) and close-off retainer (4) on cowl panel (1) and hand throttle bracket (7) with four washers (6), capscrews (5), washers (6), and locknuts (12). Tighten locknuts (12) to 8 lb-ft (11 N·m).
2. Install intermediate steering shaft (10) through close-off (3) on steering column (2) with washer (9), capscrew (11), washer (9), and locknut (8). Tighten locknut (8) to 40-50 lb-ft (54-68 N·m).

8-22. INTERMEDIATE STEERING SHAFT CLOSE-OFF AND RETAINER REPLACEMENT (Cont'd)

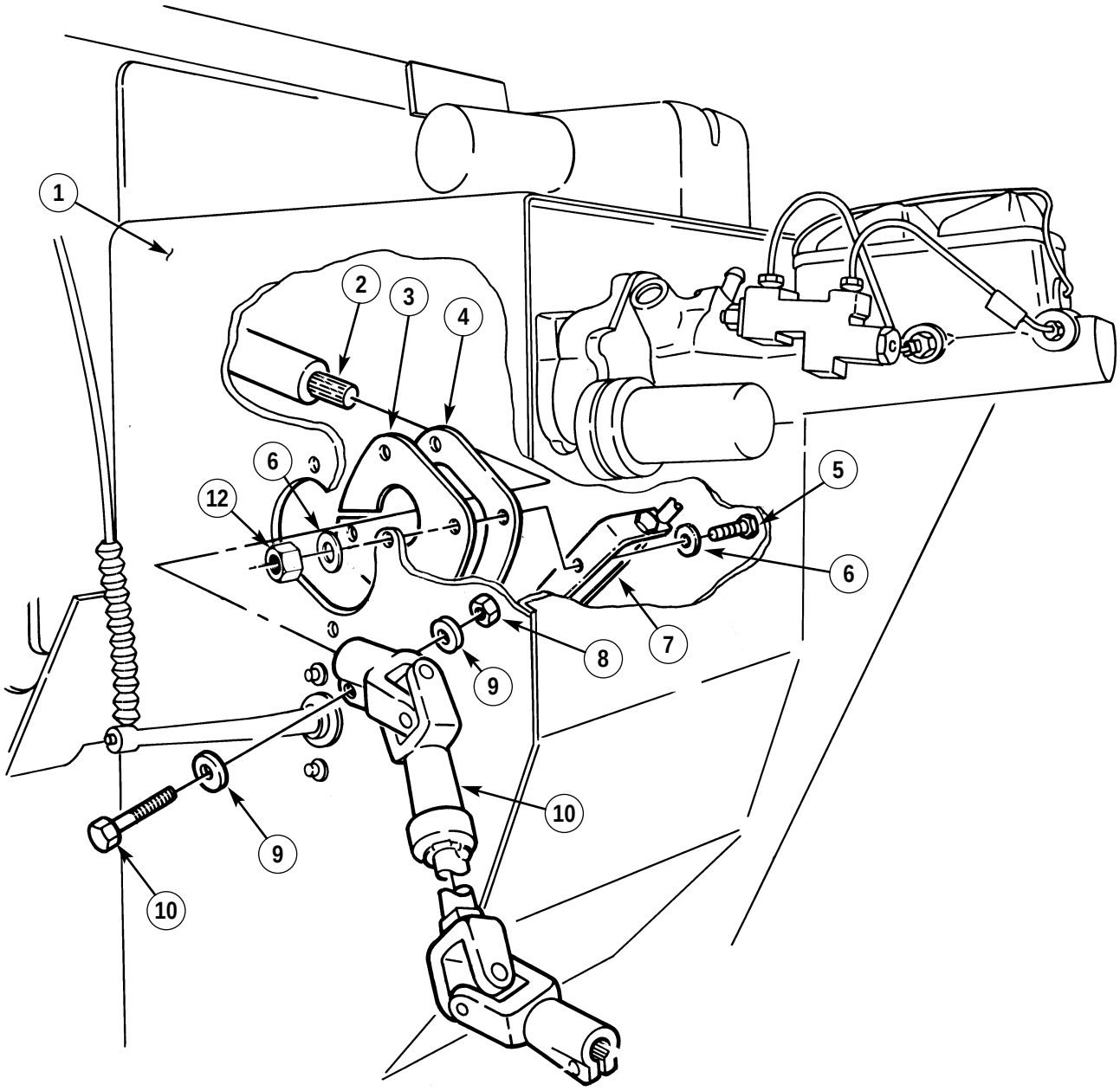

8-23. POWER STEERING PUMP AND PULLEY REPLACEMENT

This task covers:

a. Removal **b. Installation**

INITIAL SETUP:

Tools

General mechanic's tool kit:
automotive (Appendix B, Item 1)
Maintenance and repair shop equipment:
automotive (Appendix B, Item 2)

Special Tools

Pulley installer (Appendix B, Item 121)

Materials/Parts

Lockwasher (Appendix G, Item 183)
O-ring (Appendix G, Item 220)

Manual References

TM 9-2320-387-10
TM 9-2320-387-24P

Equipment Condition

- Hood raised and secured (TM 9-2320-387-10).
- Serpentine drivebelt removed (para. 3-81).

Maintenance Level

Unit

a. Removal

CAUTION

Cover or plug all hoses and connections immediately after disconnection to prevent contamination. Remove all plugs prior to connection.

1. Loosen two clamps (2) and disconnect return lines (1) and high-pressure line (5) from power steering pump (3). Remove O-ring (4) from high-pressure line (5). Discard O-ring (4).
2. Remove nut (7), clamp (8), and wiring harness (6) from power steering pump (3).
3. Remove nut (15), lockwasher (14), washer (13), capscrew (9), washer (10), and idler pulley (11) from bracket (12). Discard lockwasher (14).
4. Remove two capscrews (17), capscrew (18), and power steering pump (3) from mounting bracket (16).
5. Remove capscrew (19), washer (20), and power steering pulley (21) from power steering pump (3).

b. Installation

CAUTION

Serpentine belt failure (abnormal wear or drive belt dislodgement) can be caused by misalignment of pulleys, improper installation, or foreign objects introduced into belt path. Inspect power steering pump pulley for proper installation and ease of rotation. Any wobble or misalignment will cause belt failure. Refer to para. 3-81 for pulley alignment procedures.

NOTE

Ensure flat surface of pulley is facing out and is flush with pump shaft.

1. Using pulley installer, install pulley (21) on power steering pump (3).
2. Secure pulley (21) to power steering pump (3) with washer (20) and capscrew (19). Tighten capscrew (19) to 37 lb-ft (50 N·m).
3. Install power steering pump (3) on mounting bracket (16) with capscrew (18) and two capscrews (17).
4. Install idler pulley (11) on bracket (12) with washer (10), capscrew (9), washer (13), lockwasher (14), and nut (15).
5. Install O-ring (4) on high-pressure line (5) and install high-pressure line (5) on power steering pump (3).
6. Install two return lines (1) on power steering pump (3) and tighten clamps (2).
7. Install wiring harness (6) and clamp (8) on power steering pump (3) with nut (7).

8-23. POWER STEERING PUMP AND PULLEY REPLACEMENT (Cont'd)

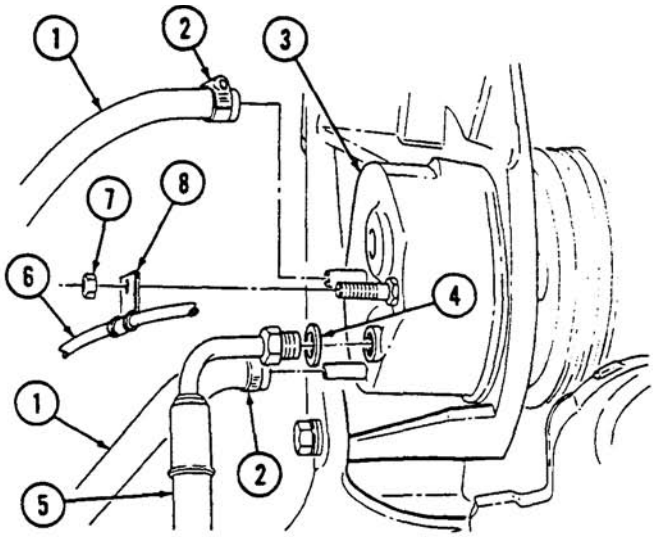

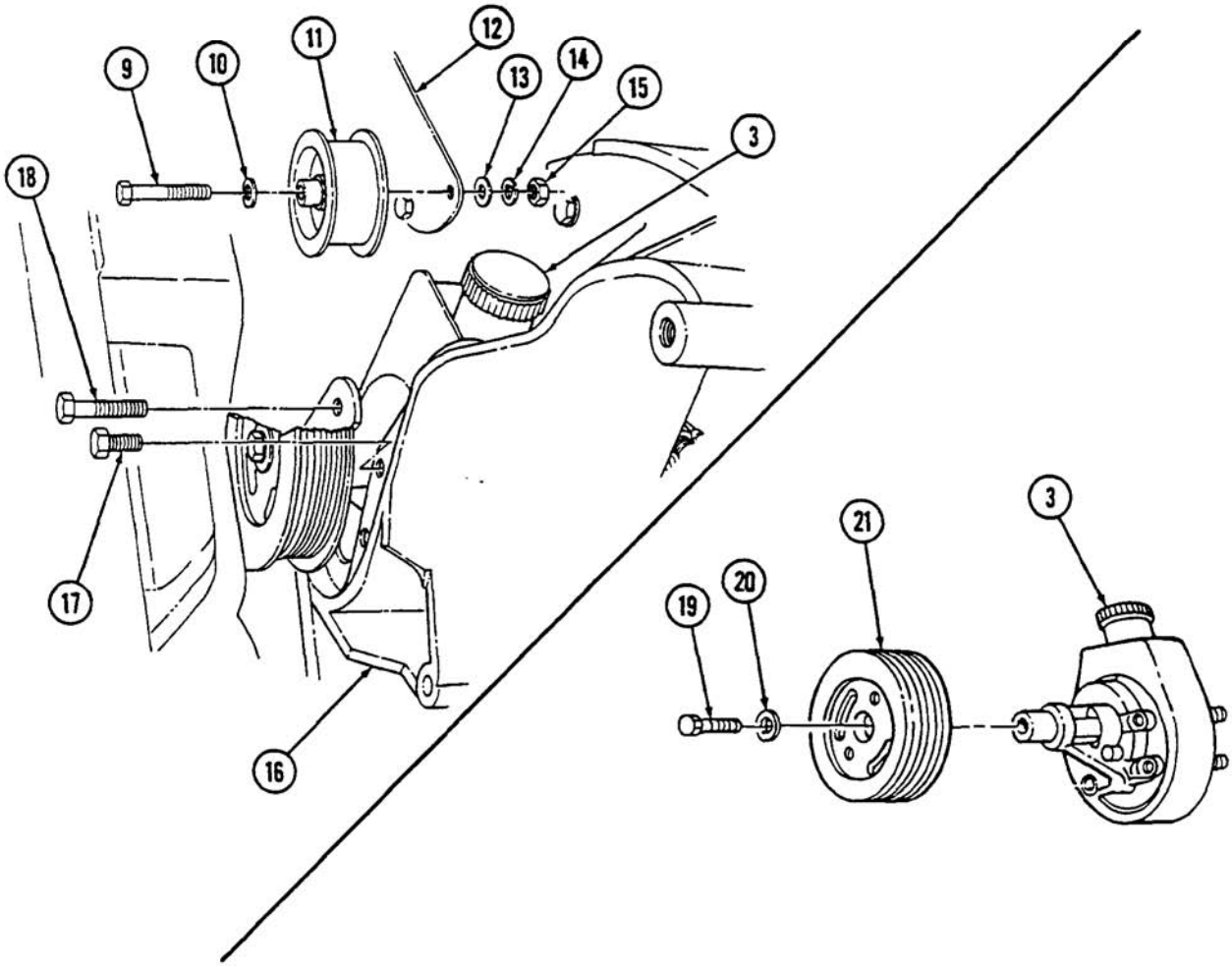

8-23.1. POWER STEERING PUMP AND PULLEY REPLACEMENT, SERIAL NUMBERS 196901 AND ABOVE

This task covers:

a. Removal **b. Installation**

INITIAL SETUP:

Tools

General mechanic's tool kit:
automotive (Appendix B, Item 1)
Maintenance and repair shop equipment:
automotive (Appendix B, Item 2)

Materials/Parts

Three lockwashers (Appendix G, Item 162)
Lockwasher (Appendix G, Item 190.1)

Manual References

TM 9-2320-387-24P

Equipment Condition

- Hood raised and secured (TM 9-2320-387-10).
- Serpentine drivebelt removed (para. 3-81).

Maintenance Level

Unit

a. Removal

1. Remove screw (10), spacer (12), lockwasher (11), and pulley (9) from power steering pump (5). Discard lockwasher (11).

NOTE

Use a suitable container to catch power steering fluid.

2. Disconnect hose (13) from elbow (1) on power steering pump (5).
3. Loosen two hose clamps (3) and slide hose (2) off tube (4) on power steering pump (5).
4. Remove three screws (8), lockwashers (7), and power steering pump (5) from alternator/pump support (6). Discard lockwashers (7).

b. Installation

1. Position power steering pump (5) on alternator/pump support (6) and secure with three lockwashers (7) and screws (8). Tighten screws (8) to 21-25 lb-ft (28-34 N·m).
2. Slide hose (2) with two hose clamps (3) on tube (4) on power steering pump (5) and tighten hose clamps (3).
3. Connect hose (13) to elbow (1) on power steering pump (5).
4. Install pulley (9) on shaft of power steering pump (5) with spacer (12), lockwasher (11), and screw (10). Tighten screw (10) to 21-25 lb-ft (28-34 N·m).

8-23.1. POWER STEERING PUMP AND PULLEY REPLACEMENT, SERIAL NUMBERS 196901 AND ABOVE (Cont'd)

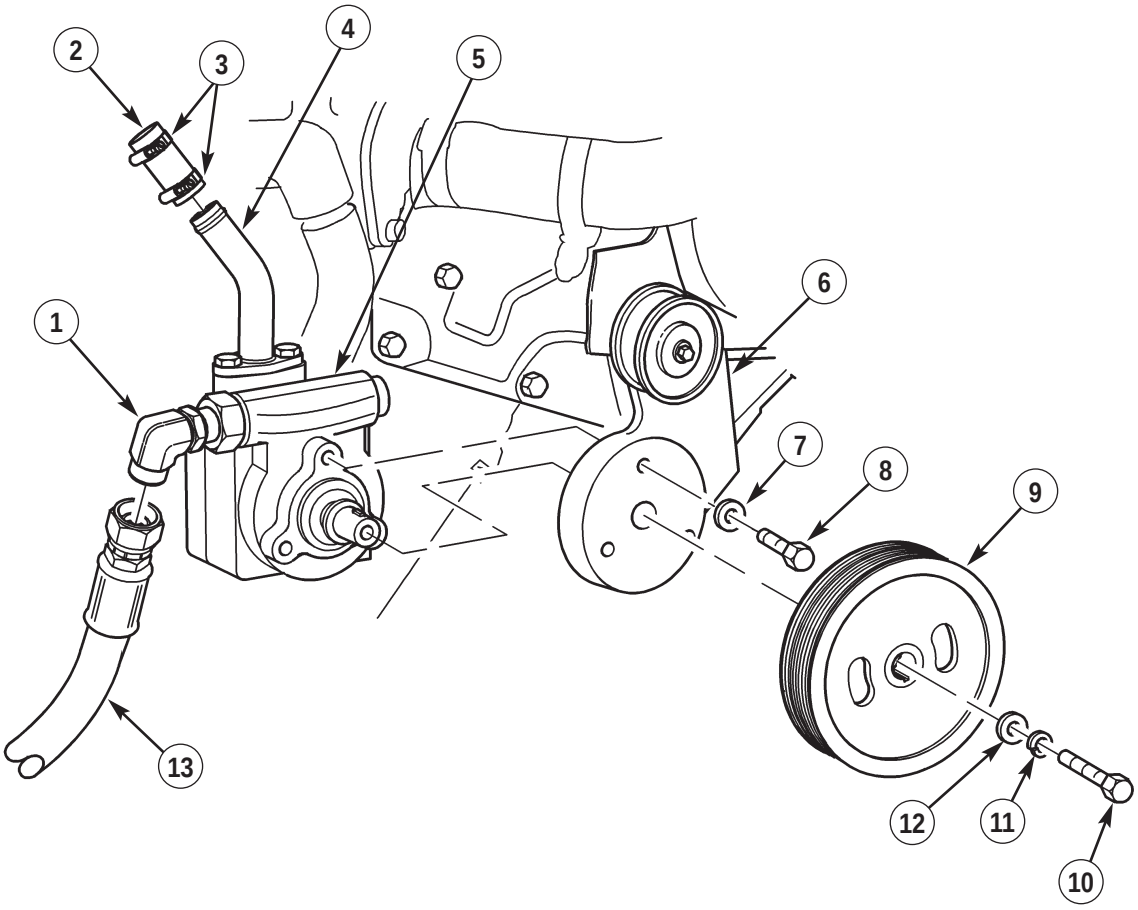

FOLLOW-ON TASKS:
- Install serpentine belt (para. 3-81).
- Bleed power steering system (para. 8-27.1).
- Close and secure hood (TM 9-2320-387-10).

8-23.2. POWER STEERING PUMP PRESSURE RELIEF VALVE REPLACEMENT (SERIAL NUMBERS 196901 AND ABOVE)

This task covers:

a. Removal **b. Installation**

INITIAL SETUP:

Tools

General mechanic's tool kit: automotive (Appendix B, Item 1)
Maintenance and repair shop equipment: automotive (Appendix B, Item 2)

Materials/Parts

Kit, pressure relief valve (Appendix G, Item 72.2)

Manual References

TM 9-2320-387-24P

Equipment Condition

- Serpentine drivebelt removed (para. 3-81).
- Hood open and secured (TM 9-2320-387-10).

Maintenance Level

Unit

NOTE

Power steering pump relief valve can be replaced with the power steering pump installed on mounting bracket.

Use suitable container to catch power steering fluid.

Perform step 1 if power steering pump is still mounted in vehicle.

a. Removal

1. Disconnect hose (1) from elbow (2) on power steering pump (7).
2. Remove elbow (2) with adapter (3) and O-ring (4) from power steering pump (7). Discard O-ring (4).
3. Remove pressure relief valve (5) and spring (6) from outlet port (8) on power steering pump (7). Discard spring (6).

b. Installation

1. Install spring (6) on end of pressure relief valve (5).
2. Install spring (6) and pressure relief valve (5) in outlet port (8) on power steering pump (7).
3. Install O-ring (4) and adapter (3) on elbow (2) and install elbow (2) with adapter (3) and O-ring (4) on power steering pump (7) with elbow (2) pointed towards ground. Tighten nut on elbow (2).

NOTE

Perform step 4 if power steering pump is still mounted in vehicle.

Perform step 5 if power steering pump is out of vehicle.

4. Connected pressure hose (1) to elbow (2) on power steering pump (7).

8-23.2. POWER STEERING PUMP PRESSURE RELIEF VALVE REPLACEMENT (SERIAL NUMBERS 196901 AND ABOVE) (Cont'd)

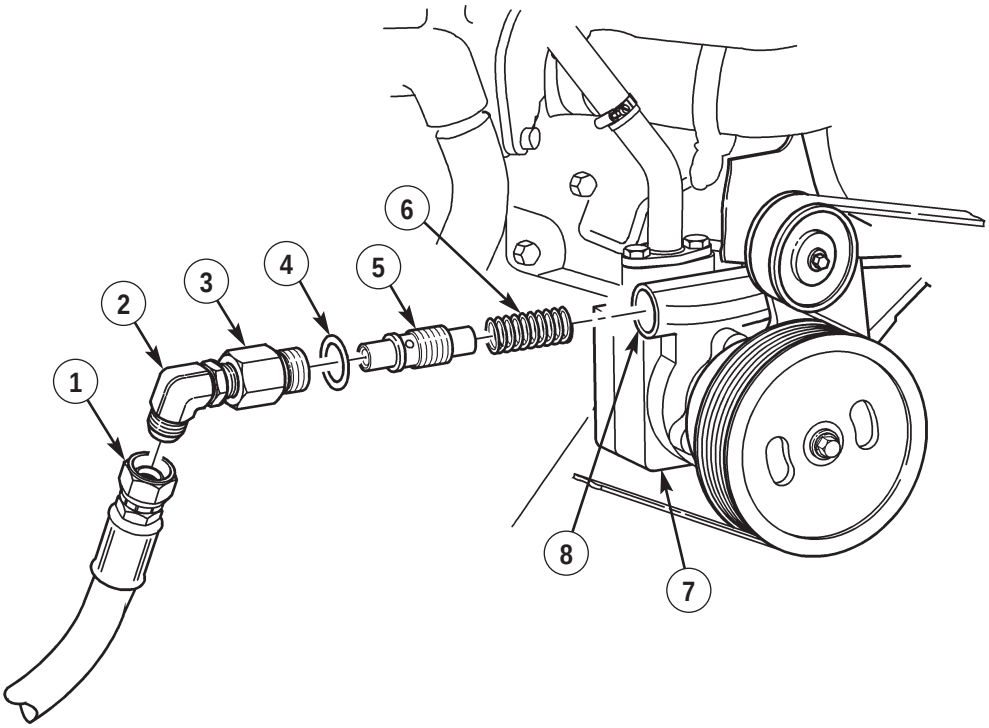

FOLLOW-ON TASKS:
- Install serpentine belt (para. 3-81).
- Bleed power steering system (para. 8-27.1).
- Close and secure hood (TM 9-2320-387-10).

8-24. POWER STEERING HYDRAULIC SYSTEM PRESSURE AND RETURN HOSE REPLACEMENT

This task covers:

a. Removal **b. Installation**

INITIAL SETUP:

Tools
General mechanic's tool kit: automotive (Appendix B, Item 1)

Materials/Parts
Locknut (Appendix G, Item 77)
Six O-rings (Appendix G, Item 220)
Nut and lockwasher assembly (Appendix G, Item 197)

Manual References
TM 9-2320-387-10
TM 9-2320-387-24P

Equipment Condition
- Hood raised and secured (TM 9-2320-387-10).
- Battery ground cables disconnected (para. 4-68).

General Safety Instructions
Do not drain fluid when engine is hot.

Maintenance Level
Unit

NOTE

The replacement procedure is basically the same for all hydraulic system pressure and return hoses.

a. Removal

WARNING

Do not drain fluid when engine is hot. Severe injury to personnel will result.

CAUTION

Cover or plug all hoses and connections immediately after disconnection to prevent contamination. Remove all covers or plugs prior to connection.

NOTE

Have drainage container ready to catch fluid.

1. Remove locknut (1), washer (2), and bolt (4) from clamp (3). Discard locknut (1).
2. Remove clamp (3) from bypass hose (5).
3. Loosen three clamps (6) on tee (7).
4. Disconnect two bypass hoses (5) and return hose (8) from tee (7).
5. Remove nut and lockwasher assembly (19), capscrew (15), washer (16), two clamps (18), harness clamp (17), return hose (9), and O-ring (17.1) from power steering lines bracket (20). Discard nut and lockwasher assembly (19).
6. Loosen clamp (12) on return hose (8) and remove return hose (8) and clamp (12) from hydro-boost (11).
7. Remove pressure hose (13) from hydro-boost (11) and steering gear (21).
8. Remove two O-rings (10) from pressure hose (13). Discard O-rings (10).
9. Remove pressure hose (9) from hydro-boost (11) and power steering pump (14).
10. Remove two O-rings (10) from pressure hose (9). Discard O-rings (10).

8-24. POWER STEERING HYDRAULIC SYSTEM PRESSURE AND RETURN HOSE REPLACEMENT (Cont'd)

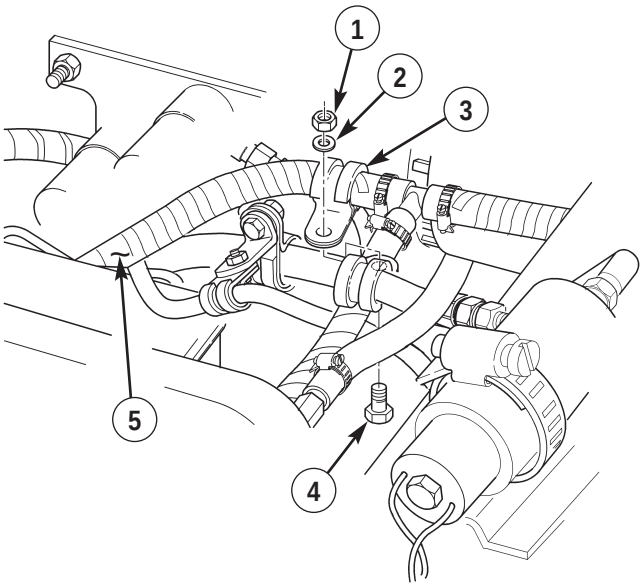

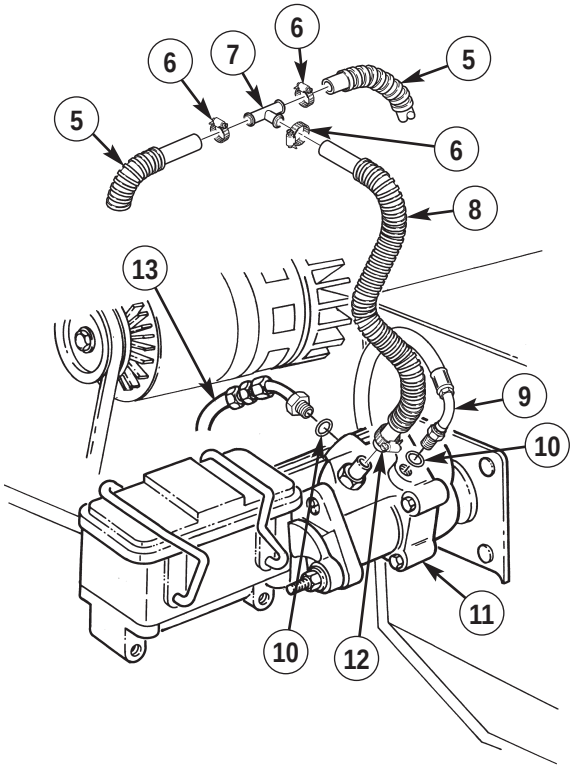

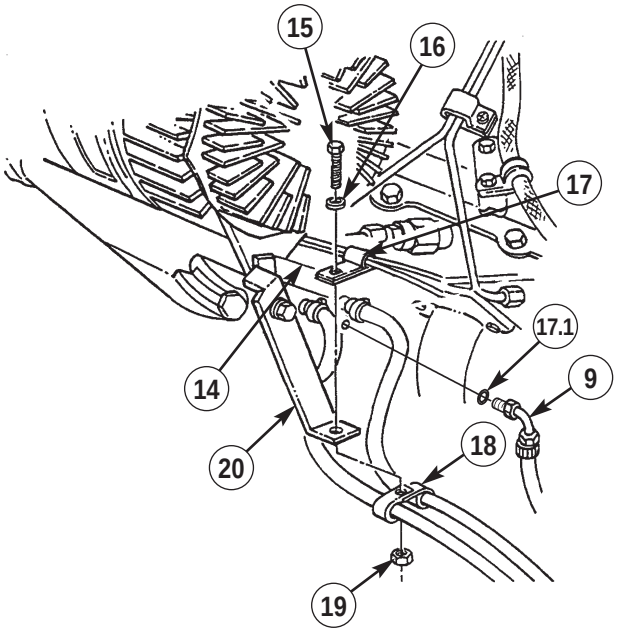

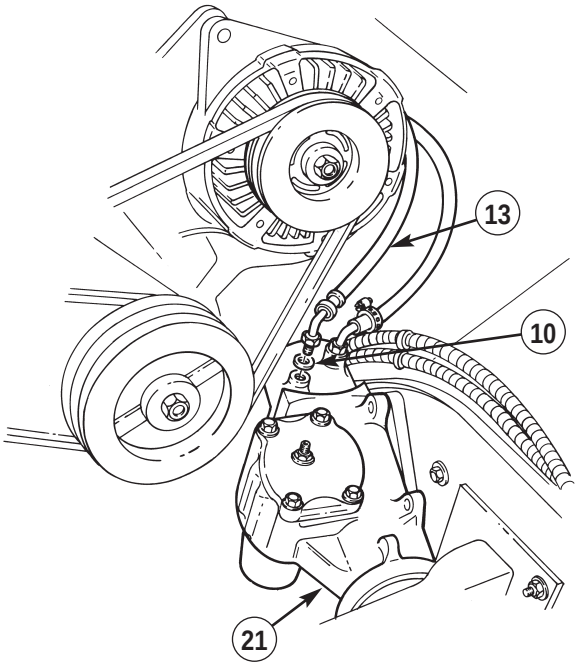

8-24. POWER STEERING HYDRAULIC SYSTEM PRESSURE AND RETURN HOSE REPLACEMENT (Cont'd)

NOTE

Perform steps 11 thru 14 if vehicle is equipped with winch.

11. Disconnect pressure hose (3) from hydro-boost (5) and valve assembly (2).
12. Remove O-ring (4) from pressure hose (3). Discard O-ring (4).
13. Disconnect pressure hose (1) from valve assembly (2) and steering gear (6).
14. Remove O-ring (4) from pressure hose (1). Discard O-ring (4).

b. Installation

NOTE

Perform steps 1 thru 4 if vehicle is equipped with winch.

1. Install O-ring (4) on pressure hose (1).
2. Connect pressure hose (1) to valve assembly (2) and steering gear (6).
3. Install O-ring (4) on pressure hose (3).
4. Connect pressure hose (3) to hydro-boost (5) and valve assembly (2).
5. Install two O-rings (4) on pressure hose (10).
6. Install pressure hose (10) on hydro-boost (5) and power steering pump (14).
7. Install two O-rings (4) on pressure (1).
8. Install pressure hose (1) on hydro-boost (5) and steering gear (6).
9. Install return hose (22) and clamp (23) on hydro-boost (5) and tighten clamp (23).
10. Install washer (8), capscrew (7), two clamps (11), harness clamp (9), return hose (10), O-ring (9.1), and nut and lockwasher assembly (12) on power steering lines bracket (13).
11. Connect two bypass hoses (19) and return hose (22) to tee (21).
12. Tighten three clamps (20) and tee (21).
13. Install clamp (17) on bypass hose (19).
14. Install bolt (18), washer (16), and locknut (15) on clamp (17).

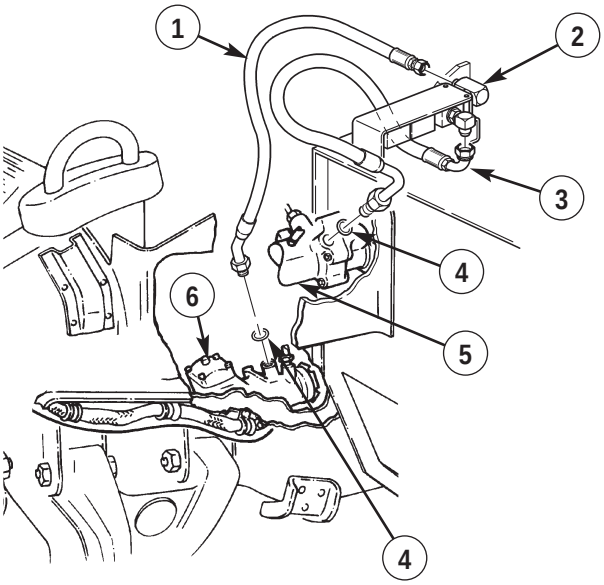

8-24. POWER STEERING HYDRAULIC SYSTEM PRESSURE AND RETURN HOSE REPLACEMENT (Cont'd)

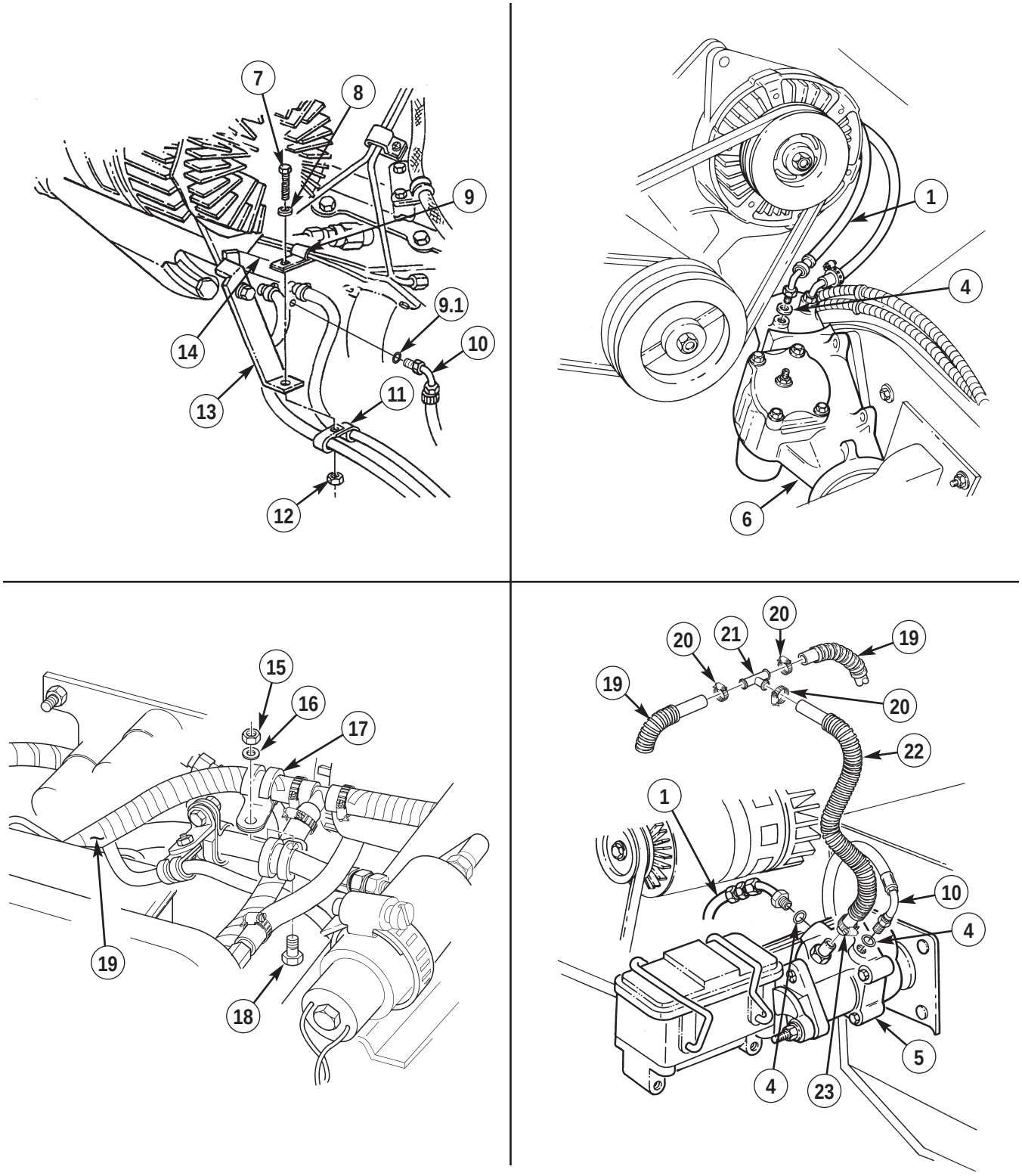

FOLLOW-ON TASKS:
- Connect battery ground cables (para. 4-67).
- Bleed power steering system (para. 8-27).
- Lower and secure hood (TM 9-2320-387-10).

8-24.1. POWER STEERING HYDRAULIC SYSTEM PRESSURE HOSE REPLACEMENT, SERIAL NUMBERS 196901 AND ABOVE

This task covers:

a. Removal **b. Installation**

INITIAL SETUP:

Tools

General mechanic's tool kit:
automotive (Appendix B, Item 1)
Maintenance and repair shop equipment:
automotive (Appendix B, Item 2)

Materials/Parts

O-ring (Appendix G, Item 220)
Power steering fluid (Appendix C, Item 37)

Manual References

TM 9-2320-387-10
TM 9-2320-387-24P

Equipment Condition

Hood raised and secured (TM 9-2320-387-10).

Maintenance Level

Unit

CAUTION

Cover or plug all open lines and connections immediately after disconnection to prevent contamination. Remove all covers or plugs prior to connection.

NOTE

Use suitable container to catch power steering fluid.

a. Removal

1. Disconnect pressure hose (3) from elbow (1) on power steering pump (2). Drain power steering fluid.
2. Disconnected pressure hose (3) from adapter (4) on hydro-boost (6).
3. Remove adapter (4) and O-ring (5) from hydro-boost (6). Discard O-ring (5).

b. Installation

1. Lubricate O-ring (5) with power steering fluid and install O-ring (5) on adapter (4).
2. Install adapter (4) with O-ring (5) on hydro-boost (6).
3. Connect pressure hose (3) to adapter (4) on hydro-boost (6). Do not tighten nut on hose (3).
4. Connect pressure hose (3) to elbow (1) on power steering pump (2). Tighten nuts on hose (3).

8-24.1. POWER STEERING HYDRAULIC SYSTEM PRESSURE HOSE REPLACEMENT, SERIAL NUMBERS 196901 AND ABOVE (Cont'd)

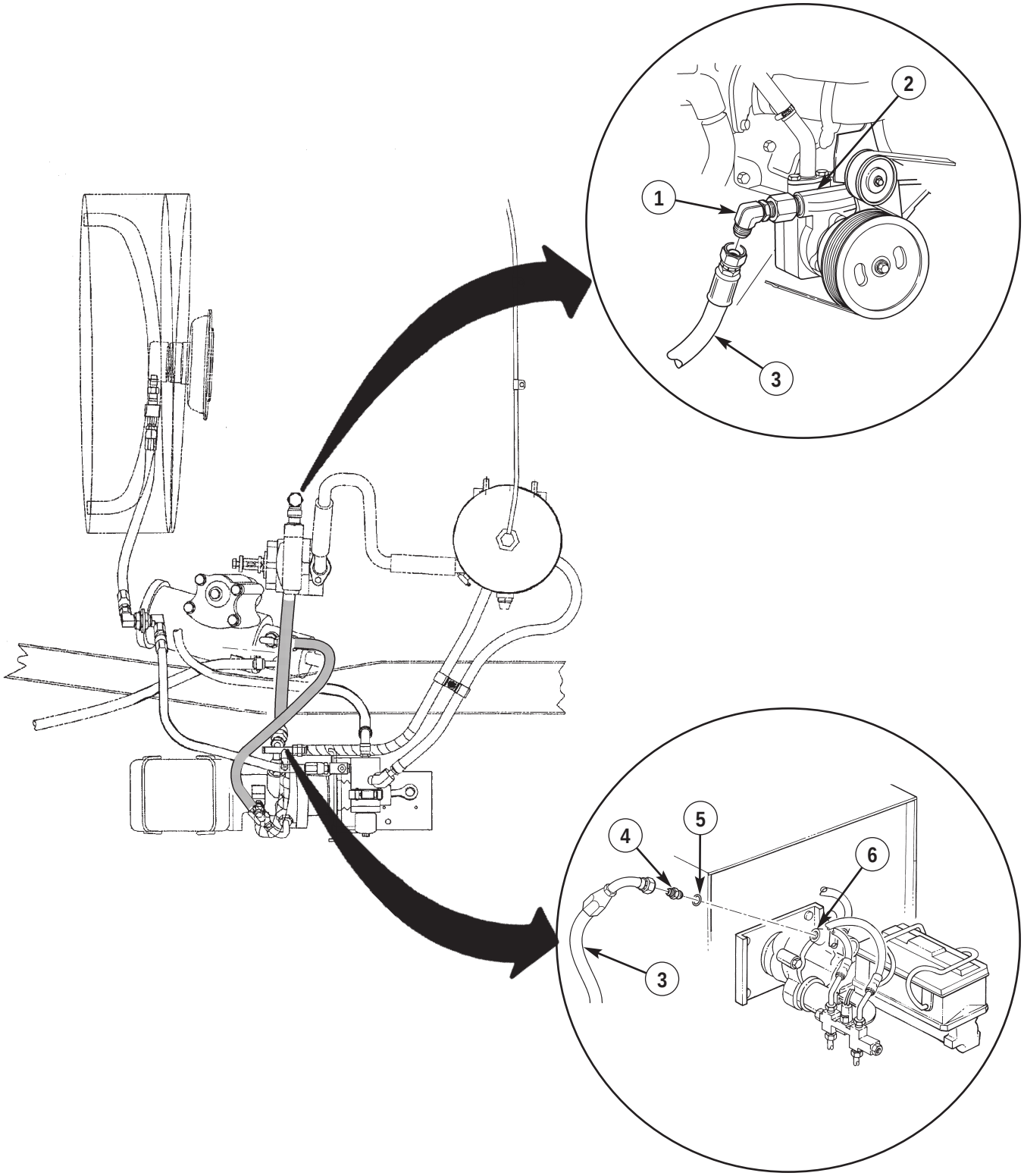

FOLLOW-ON TASKS: • Bleed power steering system (para. 8-27.1).
• Lower and secure hood (TM 9-2320-387-10).

8-25. POWER STEERING SYSTEM HYDRAULIC CONTROL VALVE MAINTENANCE

This task covers:

a. Removal
b. Back Flush Procedure
c. Inspection
d. Installation

INITIAL SETUP:

Tools
General mechanic's tool kit:
automotive (Appendix B, Item 1)
Maintenance and repair shop equipment:
automotive (Appendix B, Item 2)

Manual References
TM 9-2320-387-10
TM 9-2320-387-24P

Equipment Condition
- Battery ground cables disconnected (para. 4-68).
- Hood raised and secured (TM 9-2320-387-10).

General Safety Instructions
Do not drain fluid when engine is hot.

Maintenance Level
Unit

NOTE

If referred here from chapter 2 troubleshooting instructions to perform back flush procedure, follow steps 1 through 4 and then proceed to task b.

a. Removal

WARNING

Do not drain fluid when engine is hot. Severe injury to personnel will result.

CAUTION

Cover or plug all hoses and connections immediately after disconnection to prevent contamination. Remove all plugs prior to connection.

NOTE

- Note location of hoses for installation.
- Have drainage container ready to catch fluid.

1. Loosen clamp (2) and disconnect power steering return line hose (1) from control valve elbow (4).
2. Loosen clamp (11) and disconnect fan clutch hose (12) from control valve fitting (10).
3. Loosen clamp (14) and disconnect steering gear hose (13) from control valve elbow (3).
4. Disconnect time-delay module connector (6) from control valve connector (7).
5. Loosen clamp (5) and remove control valve (8) from bracket (9).

b. Back Flush Procedure

NOTE

If vehicle is equipped with bleeder tee, perform steps 1.1 and 1.2.

1. Connect battery ground cables (para. 4-68).
1.1. Remove bleeder tee (10.1) from control valve (8).
1.2. Install control valve fitting (10) on control valve (8).
2. Install steering gear hose (13) on control valve fitting (10).
3. Remove control valve elbow (4) from control valve (8) and install pipe plug (15) (NSN 4730-00-011-2578) on control valve (8).
4. Install drain hose (16) (make from NSN 4720-01-186-2358, 36 in. (91.4 cm) long) on control valve elbow (3).

8-25. POWER STEERING SYSTEM HYDRAULIC CONTROL VALVE MAINTENANCE (Cont'd)

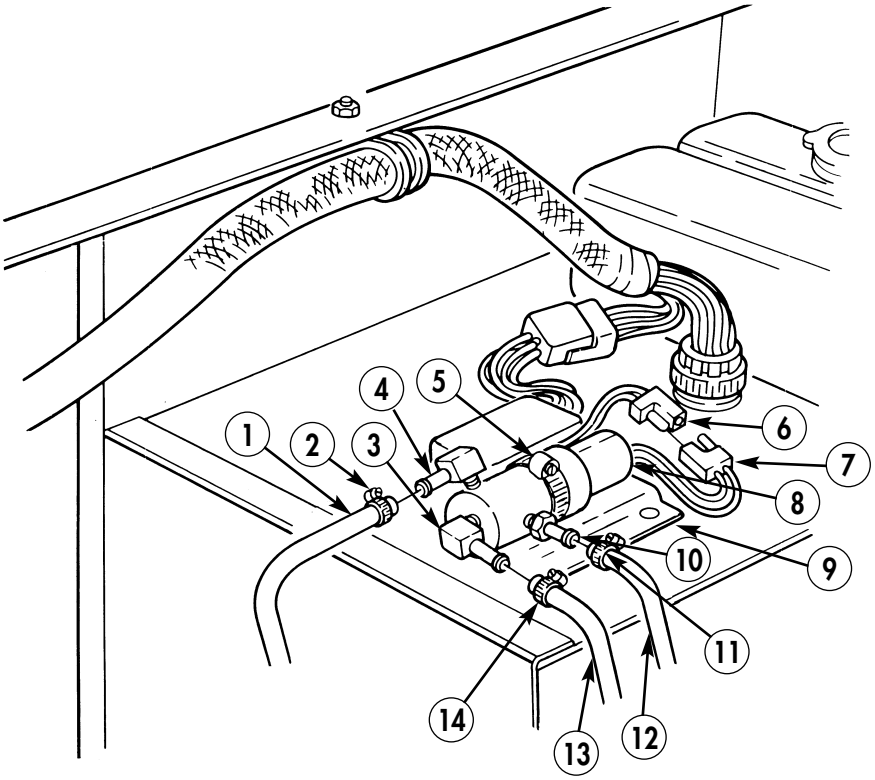

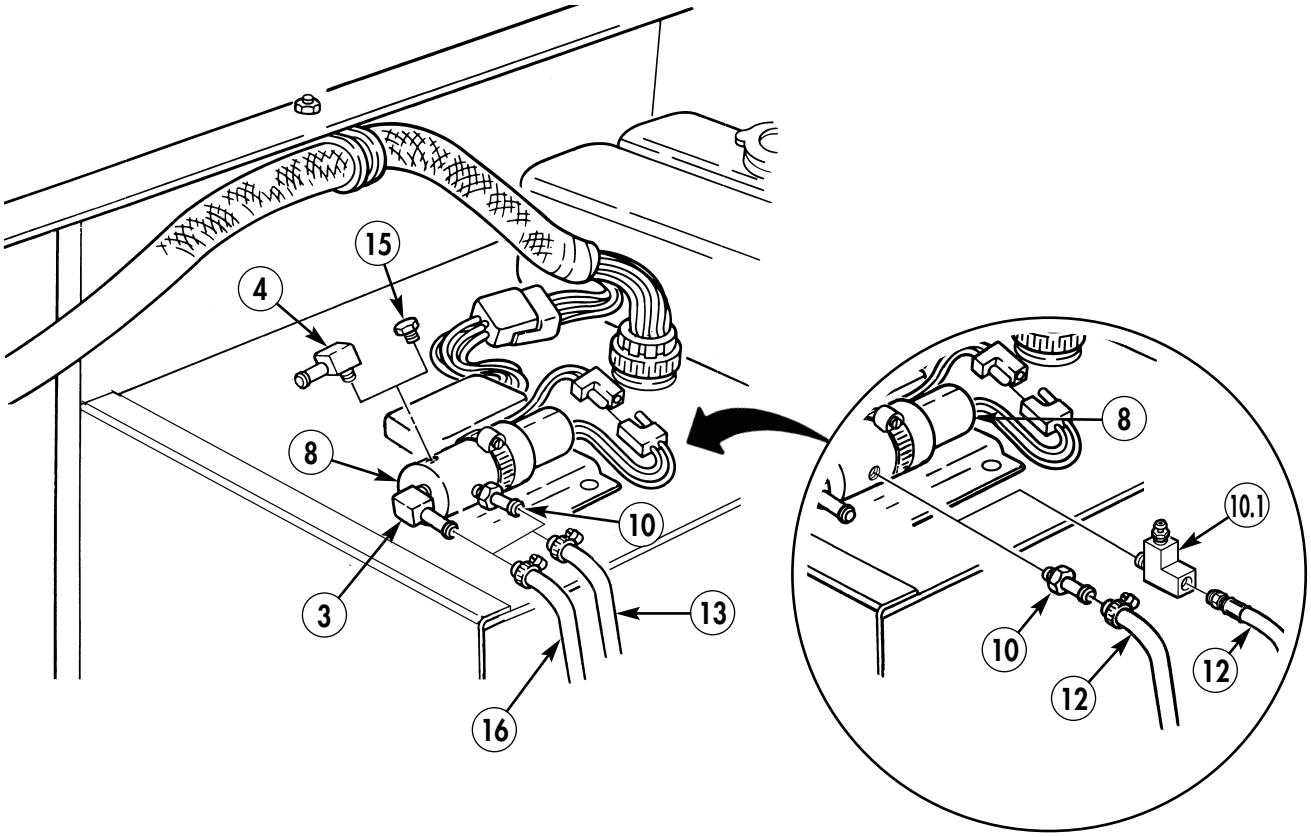

8-25. POWER STEERING SYSTEM HYDRAULIC CONTROL VALVE MAINTENANCE (Cont'd)

5. Place drainage container underneath drain hose (16) to catch fluid.

CAUTION

- To ensure there is no load on the steering gear, position front wheels straight ahead before starting engine. Failure to do this may cause damage to the control valve.
- Maintain power steering fluid level at all times while performing back flush procedure to prevent air from entering power steering system. Failure to do this may result in damage to equipment.

6. Start engine and allow to run for about two or three seconds and stop, check, and fill power steering reservoir. Repeat the process once.
7. Remove pipe plug (2) from control valve (7).
8. Install control valve elbow (1) on control valve (7).
9. Remove steering gear hose (4) from control valve fitting (3) and install on control valve elbow (1).
10. Remove control valve fitting (3) from control valve (7) and install pipe plug (2) on control valve (7).

CAUTION

- To ensure there is no load on the steering gear, position front wheels straight ahead before starting engine. Failure to do this may cause damage to the control valve.
- Maintain power steering fluid level at all times while performing back flush procedure to prevent air from entering power steering system. Failure to do this may result in damage to equipment.

11. Start engine and allow to run for about two to three seconds and stop, check, and fill power steering reservoir. Repeat the process once.
12. Remove drain hose (5) from control valve elbow (6).
13. Remove steering gear hose (4) from control valve elbow (1).
14. Remove pipe plug (2) from control valve (7).

NOTE

If vehicle is equipped with bleeder tee, perform step 14.1.

14.1. Install bleeder tee (7.1) on control valve (7).

15. Install control valve fitting (3) on control valve (7).
16. Disconnect battery ground cables (para. 4-68).

c. Inspection

1. Inspect elbows (6) and (1) for damage. Replace elbows (6) or (1) if damaged.
2. Inspect valve fitting (3) for damage. Replace valve fitting (3) if damaged.

d. Installation

NOTE

Perform step 1 if hydraulic control valve was removed.

1. Install control valve (7) on bracket (13) with clamp (10).
2. Connect steering gear hose (4) to control valve elbow (6) and tighten clamp (16) to 30-40 lb-in. (3.4-4.5 N·m).
3. Connect fan clutch hose (15) to control valve fitting (3) and tighten clamp (14) to 30-40 lb-in. (3.4-4.5 N·m).

NOTE

If vehicle is equipped with bleeder tee, perform step 3.1.

3.1 Connect fan clutch hose (15) to bleeder tee (7.1).

4. Connect power steering return line hose (8) to control valve elbow (1) and tighten clamp (9) to 30-40 lb-in. (3.4-4.5 N·m).

8-25. POWER STEERING SYSTEM HYDRAULIC CONTROL VALVE MAINTENANCE (Cont'd)

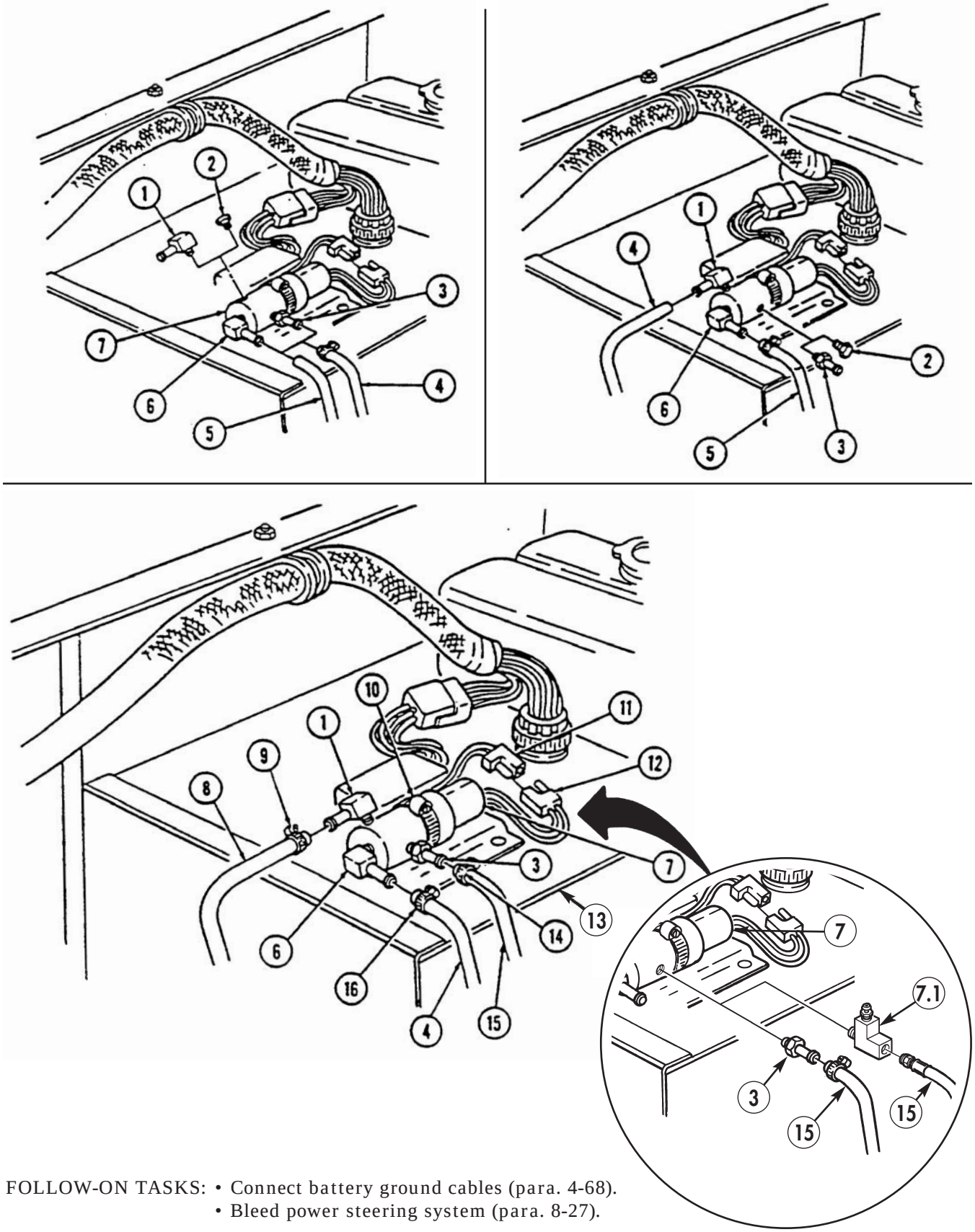

FOLLOW-ON TASKS: • Connect battery ground cables (para. 4-68).
• Bleed power steering system (para. 8-27).

8-26. POWER STEERING COOLER HOSE AND MANIFOLD VALVE HOSES REPLACEMENT

This task covers:

a. Removal **b. Installation**

INITIAL SETUP:

Tools

General mechanic's tool kit: automotive (Appendix B, Item 1)

Materials/Parts

Two O-rings (Appendix G, Item 221)
Tiedown strap (Appendix G, Item 323)

Manual References

TM 9-2320-387-10
TM 9-2320-387-24P

Equipment Condition

- Hood raised and secured (TM 9-2320-387-10).
- Brake protection guards removed (para. 7-11).
- Rear propeller shaft removed (para. 6-4).
- Left splash shield removed (para. 10-23).

General Safety Instructions

Do not drain fluid when engine is hot.

Maintenance Level

Unit

a. Removal

WARNING

Do not drain fluid when engine is hot. Severe injury to personnel will result.

CAUTION

Cover or plug all hoses and connections immediately after disconnection to prevent contamination. Remove all covers or plugs prior to connection.

NOTE

Have drainage container ready to catch fluid.

1. Remove tiedown strap (1) from hose (3) and elbow (4) on fan shroud (2). Discard tiedown strap (1).
2. Remove clamp (11) from hose (6), and disconnect hose (6) from tee (12).
3. Remove clamp (11) from hose (13), and disconnect hose (13) from tee (12).
4. Remove two clamps (11) from hose (14) and disconnect hose (14) from tee (12) and hydro-boost (15).
5. Disconnect hose (3) from adapter (5).
6. Disconnect hose (6) from adapter (5).
7. Remove two adapters (5) and O-rings (8) from manifold valve (18). Discard O-rings (8).
8. Remove two screws (10), washers (9), manifold valve (18), and reinforcement plate (17) from left splash shield (16).

8-26. POWER STEERING COOLER HOSE AND MANIFOLD VALVE HOSES REPLACEMENT (Cont'd)

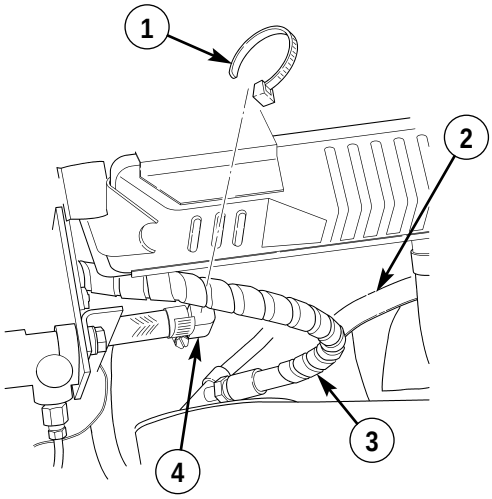

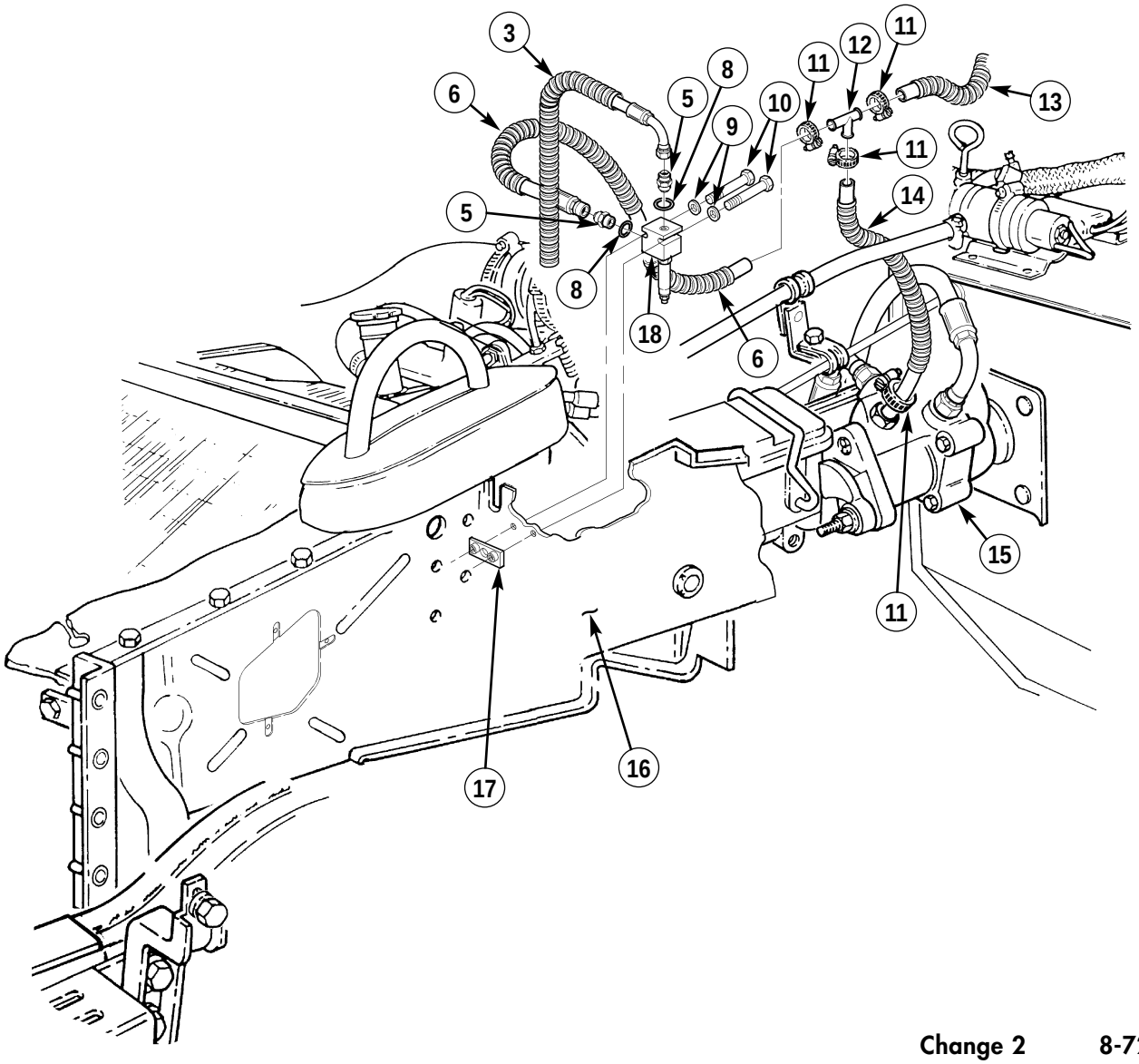

8-26. POWER STEERING COOLER HOSE AND MANIFOLD VALVE HOSES REPLACEMENT (Cont'd)

b. Installation

1. Install manifold valve (14) on left splash shield (12) with two screws (6), washers (5), and reinforcement plate (13).
2. Install two O-rings (4) and adapters (3) on manifold valve (14).
3. Connect hose (1) to adapter (3).
4. Connect hose (2) to adapter (3).
5. Connect hose (10) to hydro-boost (11) and tee (8) with two clamps (7).
6. Install clamp (7) and hose (9) on tee (8).
7. Install clamp (7) and hose (1) on tee (8).
8. Secure hose (2) to elbow (17) on fan shroud (16) with tiedown strap (15).

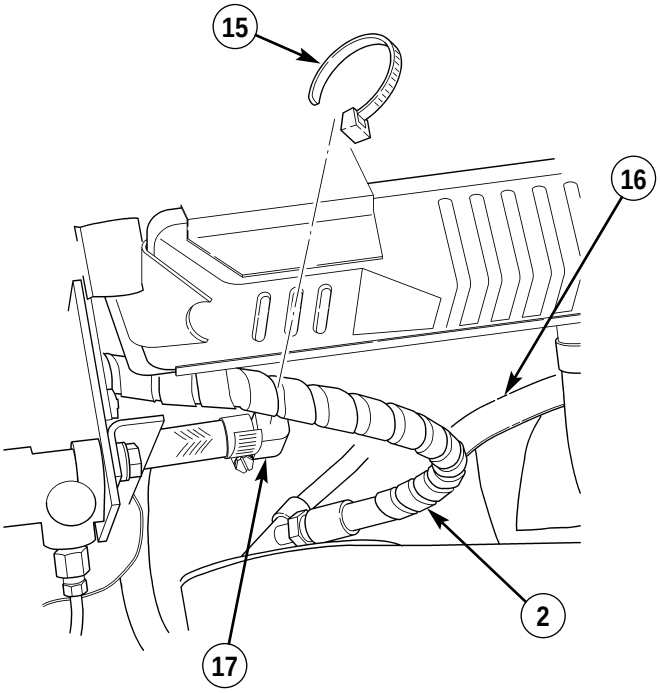

8-26. POWER STEERING COOLER HOSE AND MANIFOLD VALVE HOSES REPLACEMENT (Cont'd)

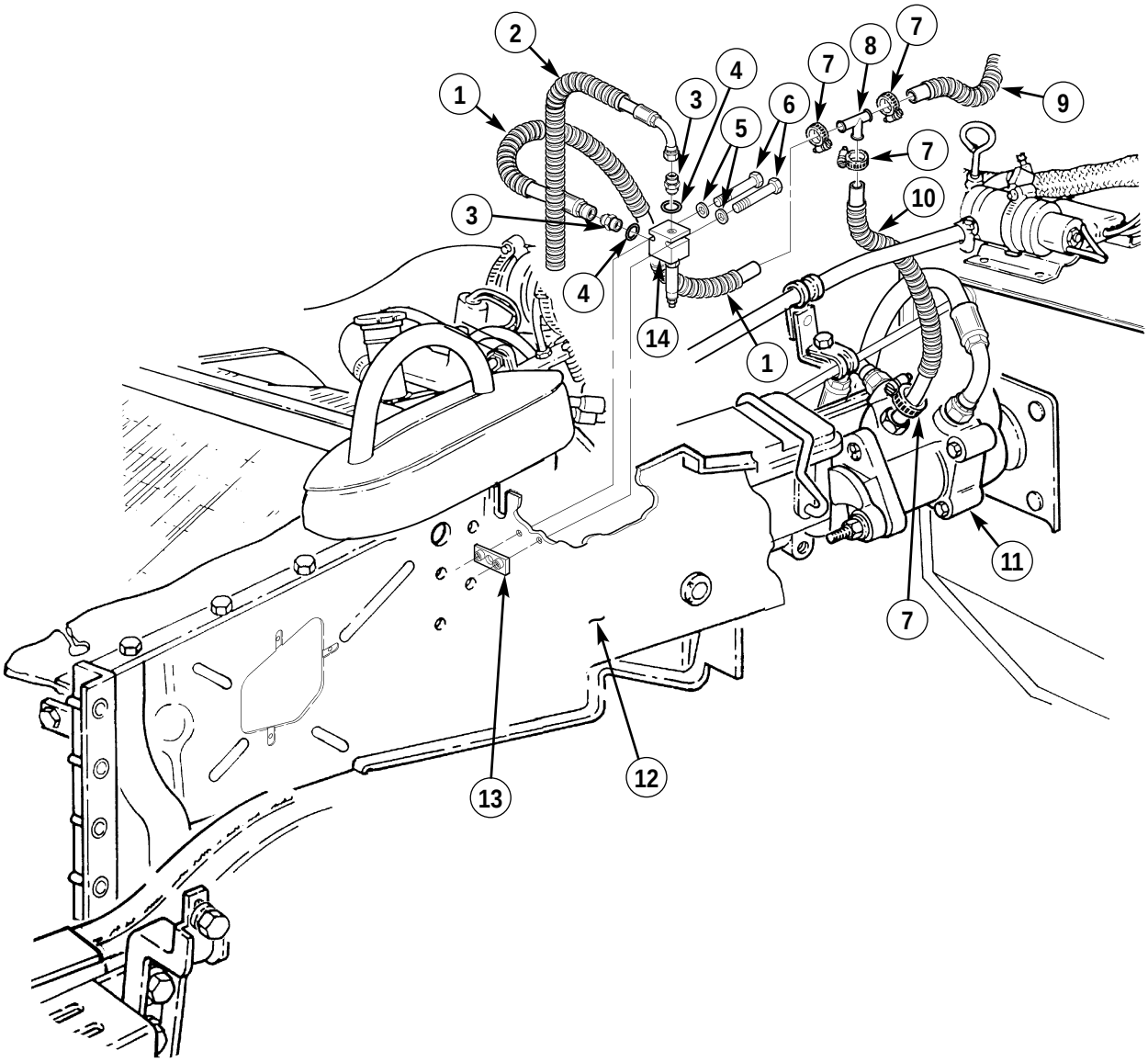

FOLLOW-ON TASKS:
- Connect battery ground cables (para. 4-68).
- Install brake protection guards (para. 7-11).
- Install rear propeller shaft (para. 6-4).
- Bleed power steering system (para. 8-27).
- Install left splash shield (para. 10-23).
- Lower and secure hood (TM 9-2320-387-10).

8-27. POWER STEERING SYSTEM BLEEDING (RCSK18330)

This task covers:

Bleeding

INITIAL SETUP:

Tools
General mechanic's tool kit:
automotive (Appendix B, Item 1)

Personnel Required
One mechanic
One assistant

Manual References
TM 9-2320-387-10
TM 9-2320-387-24P

Equipment Condition
Hood raised and secured (TM 9-2320-387-10).

Maintenance Level
Unit

Bleeding

1. Ensure engine is shut off (TM 9-2320-387-10) and turn wheels all the way to the left.
2. Add power steering fluid (TM 9-2320-387-10) to FULL COLD level on reservoir. Leave reservoir cap off.
3. Raise front wheels off ground (para. 8-2).
4. Turn steering wheel left and right, holding wheels at steering stops for five seconds, for at least 40 times.

NOTE

- Power steering fluid must be free of bubbles and foam. If bubbles or foam are noted, it could be an indication of a loose connection or leaky O-ring.
- Fluid with air in it will have a milky appearance. Air must be eliminated from system before normal steering action can be obtained.

5. Check power steering fluid level (TM 9-2320-387-10). If any bubbles are seen, repeat step 4.
6. Start engine (TM 9-2320-387-10) and with engine idling, add power steering fluid (TM 9-2320-387-10) if necessary. Install reservoir cap.
7. Turn wheels to center, shut off engine, and lower front wheels to ground (para. 8-2).
8. Start engine (TM 9-2320-387-10) and run engine for two or three minutes, turning wheels left and right.

NOTE

If pump is noisy, recheck hoses for possible contact with vehicle body or engine. If no contact is found and noise continues, turn engine off and repressurize system by following steps 9 and/or 10.

9. Remove reservoir cap. Wait for system to cool. Reinstall reservoir cap. Start engine (TM 9-2320-387-10) and check pump for noise. If noise is still present, continue to step 10. If noise stopped, proceed to step 11.
10. Turn engine off (TM 9-2320-387-10). Remove fluid from reservoir using a suction device. Refill reservoir with clean, cool fluid. Install reservoir cap. Start engine (TM 9-2320-387-10) and check pump for noise. If noise is still present, replace power steering pump (para. 8-23).
11. Turn engine off (TM 9-2320-387-10).

FOLLOW-ON TASKS:
- Check power steering fluid level (TM 9-2320-387-10).
- Lower and secure hood (TM 9-2320-387-10).
- Operate vehicle and check for proper steering operation (TM 9-2320-387-10).

8-27.1. POWER STEERING SYSTEM BLEEDING (P/N 94252A)

This task covers:

Bleeding

INITIAL SETUP:

Tools
General mechanic's tool kit:
automotive (Appendix B, Item 1)

Personnel Required
One mechanic
One assistant

Manual References
TM 9-2320-387-10
TM 9-2320-387-24P

Equipment Condition
Hood raised and secured (TM 9-2320-387-10).

Maintenance Level
Unit

Bleeding

1. Remove fill cap (1) on power steering reservoir (2) and fill with power steering fluid (TM 9-2320-387-10) until fluid is in center of sightglass (3) and replace fill cap (1) on power steering reservoir (2).
2. Start and shut off engine several times to remove air from power steering system.
3. Disconnect glow plug controller (para. 4-33).

NOTE

- Inspect power steering fluid in sightglass for bubbles or foam. Fluid must be free of bubbles and foam. If bubbles or foam are noted, it could be an indication of a loose connection.
- Inspect power steering fluid in sightglass for air. Fluid with air in it will have a milky appearance. Air must be eliminated from system before normal steering action can be obtained.

4. Start and run engine (TM 9-2320-387-10) until fluid level is below sightglass (3).
5. Shut off engine (TM 9-2320-387-10).
6. Check power steering fluid level. Add power steering fluid as necessary until fluid level is at center of sightglass (3) when cold and top of sightglass (3) when hot. Do not overfill.
7. Raise front wheels off ground (para. 8-2).
8. Start engine and check power steering system for leaks. Turn steering wheel full left and then full right.
9. Repeat steps 6 through 8 until power steering system fluid is at proper fluid level and is free of air.
10. If proper fluid level cannot be obtained through this procedure, refer to para. 8-27.1, task b.

8-27.1. POWER STEERING SYSTEM BLEEDING (P/N 94252A) (Cont'd)

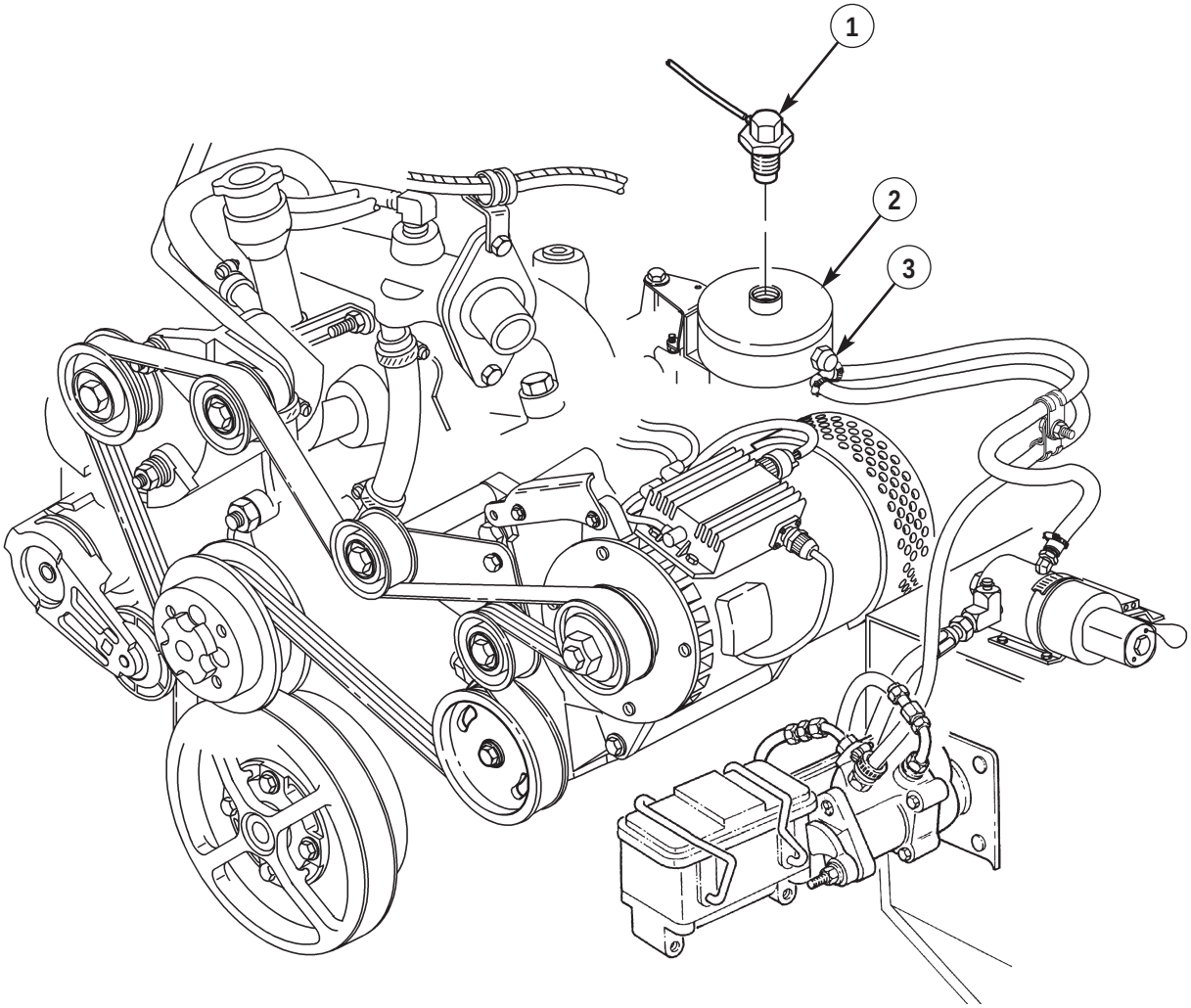

FOLLOW-ON TASK: Lower and secure hood (TM 9-2320-387-10).

8-28. POWER STEERING RELIEF VALVE CARTRIDGE MAINTENANCE

This task covers:

a. Removal
b. Inspection
c. Installation

INITIAL SETUP:

Tools

General mechanic's tool kit:
automotive (Appendix B, Item 1)

Materials/Parts

O-ring (Appendix G, Item 222)
O-ring (Appendix G, Item 236)

Manual References

TM 9-2320-387-10
TM 9-2320-387-24P

Equipment Condition

- Hood raised and secured (TM 9-2320-387-10).
- Battery ground cables disconnected (para. 4-68).

Maintenance Level

Unit support

a. Removal

CAUTION

Cover or plug all hoses and connections immediately after disconnection to prevent contamination. Remove all covers or plugs prior to connection.

NOTE

Have drainage container ready to catch fluid.

1. Disconnect high-pressure line (1) from power steering pump (7). Remove O-ring (2) from high-pressure line (1). Discard O-ring (2).

NOTE

Fitting assembly is spring-loaded. Remove carefully to avoid losing parts.

2. Remove fitting assembly (3) and O-ring (4) from pump (7). Discard O-ring (4).
3. Remove relief valve (5) and valve spring (6) from pump (7).

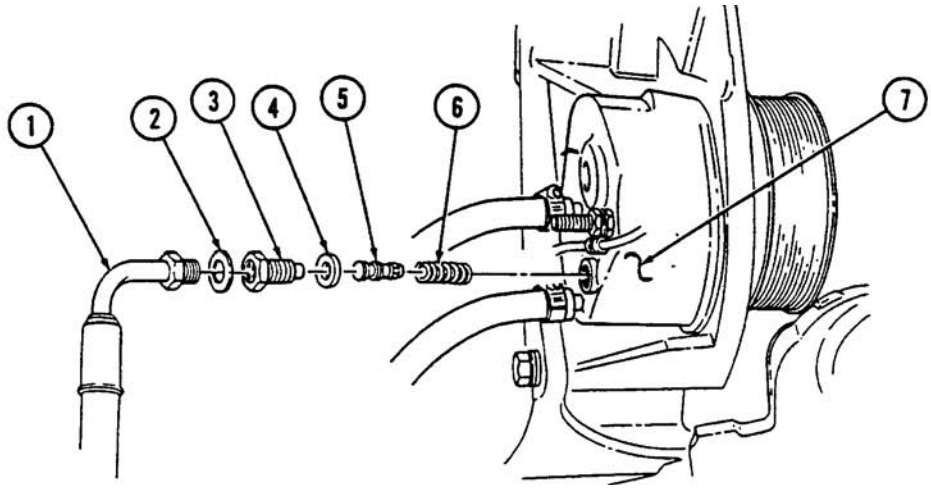

8-28. POWER STEERING RELIEF VALVE CARTRIDGE MAINTENANCE (Cont'd)

b. Inspection

Inspect external surface of relief valve (5) for burrs, nicks, or damage. Inspect relief valve (5) bore and screen for damage or debris. Inspect valve spring (6) for damage. Replace both relief valve (5) and valve spring (6) if either is damaged.

c. Installation

1. Install valve spring (6) and relief valve (5) in pump (7).
2. Install O-ring (4) and fitting (3) in pump (7). Tighten fitting (3) in pump (7) to 37 lb-ft (50 N·m).
3. Install O-ring (2) on high-pressure line (1) and install high-pressure line (1) on pump (7).

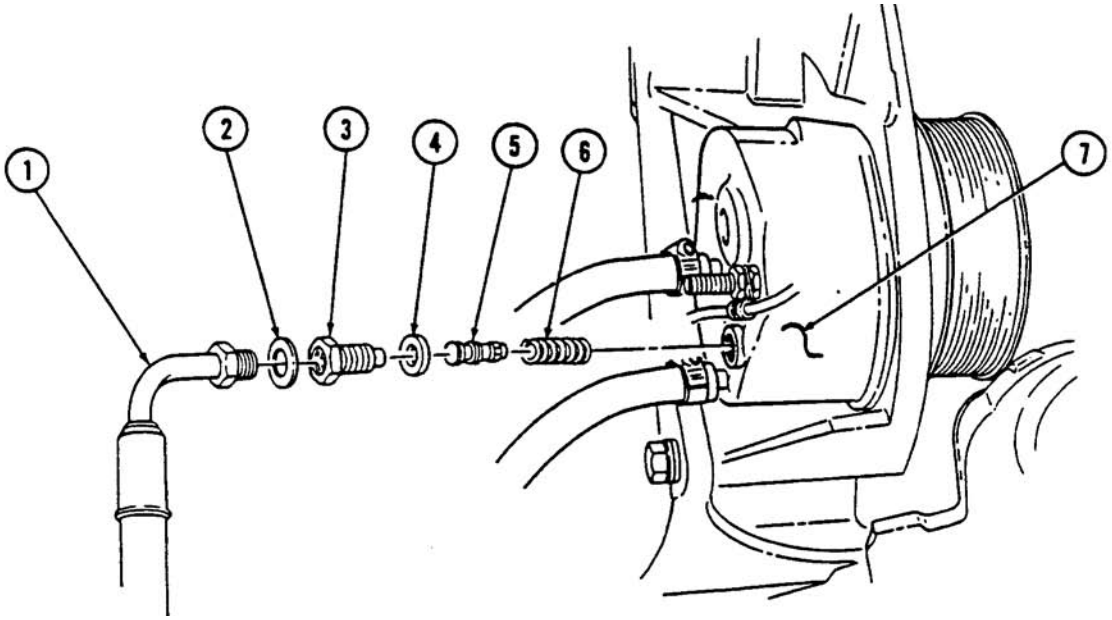

FOLLOW-ON TASKS:
- Connect battery ground cables (para. 4-68).
- Bleed power steering system (para. 8-27).

8-29. POWER STEERING RESERVOIR AND BRACKET REPLACEMENT (P/N 94252A)

This task covers:

a. Removal **b. Installation**

INITIAL SETUP:

Tools
General mechanic's tool kit:
automotive (Appendix B, Item 1)

Materials/Parts
Two lockwashers (Appendix G, Item 190.1)
Two lockwashers (Appendix G, Item 185)
Lockwasher (Appendix G, Item 190.3)

Manual References
TM 9-2320-387-10
TM 9-2320-387-24P

Equipment Condition
Hood raised and secured (TM 9-2320-387-10).

Maintenance Level
Unit

a. Removal

NOTE

Have drainage container ready to catch power steering fluid.

1. Loosen clamps (18) and (21) from hoses (19) and (20) on power steering reservoir (16).
2. Disconnect hoses (19) and (20) from front and rear ports (22) and (17) on power steering reservoir (16). Drain power steering reservoir (16).
3. Loosen two clamps (24) on hose (25) and remove from lower port (23) on power steering reservoir (16) and hose (30).
4. Disconnect vent tube (14) and fill cap (15) on power steering reservoir (16).
5. Remove screw (7), lockwasher (6), clamp (8), and fuel inlet tube (5) from bracket (3). Discard lockwasher (6).
6. Remove screw (9), clamp (10), fuel return tube (11), spacer (12), and lockwasher (13) from stud (26) on intake manifold (27). Discard lockwasher (13).
7. Remove screw (4), nut (29), lockwasher (28), bracket (3), and power steering reservoir (16) from intake manifold (27). Discard lockwasher (28).
8. Remove two nuts (1), lockwashers (2), and power steering reservoir (16) from bracket (3). Discard lockwashers (2).

8-29. POWER STEERING RESERVOIR AND BRACKET REPLACEMENT (P/N 94252A) (Cont'd)

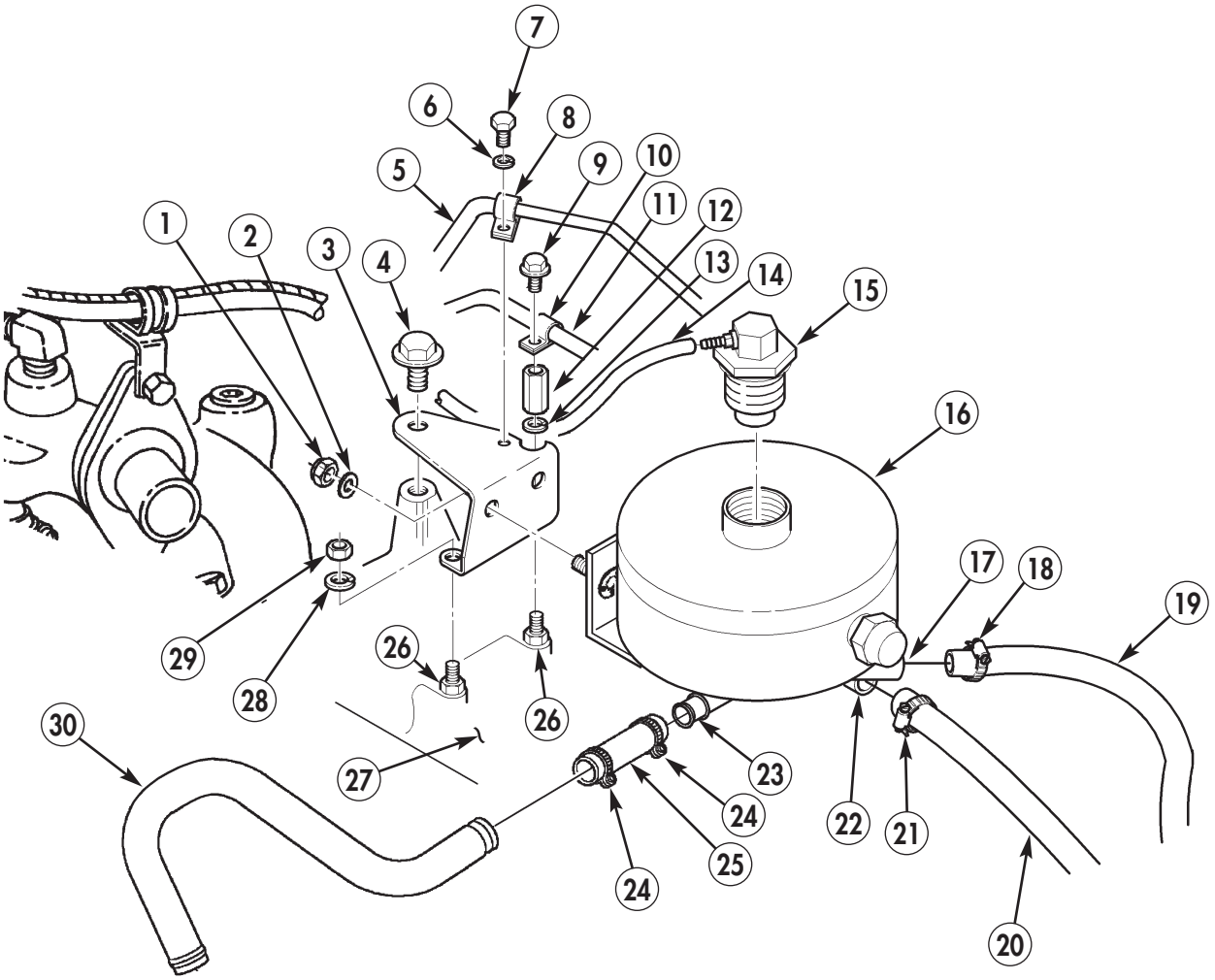

8-29. POWER STEERING RESERVOIR AND BRACKET REPLACEMENT (P/N 94252A) (Cont'd)

b. Installation

1. Position power steering reservoir (16) on bracket (3) and secure with two lockwashers (2) and nuts (1).
2. Install bracket (3) and power steering reservoir (16) on two intake manifold studs (26) with lockwasher (28), nut (29), lockwasher (13), and spacer (12).
3. Secure bracket (3) on intake manifold (27) with screw (4).
4. Install fuel return tube (11) on spacer (12) with clamp (10) and screw (9).
5. Install fuel inlet tube (5) on bracket (3) with clamp (8), lockwasher (6), and screw (7).
6. Install fill cap (15) on power steering reservoir (16), and connect vent tube (14) to fill cap (15).
7. Connect hose (25) to lower front port (23) of power steering reservoir (16) and hose (30) and tighten two clamps (24).
8. Connect hoses (20) and (19) to front port (22) and rear port (17) on power steering reservoir (16) and tighten clamps (21) and (18).

8-29. POWER STEERING RESERVOIR AND BRACKET REPLACEMENT (P/N 94252A) (Cont'd)

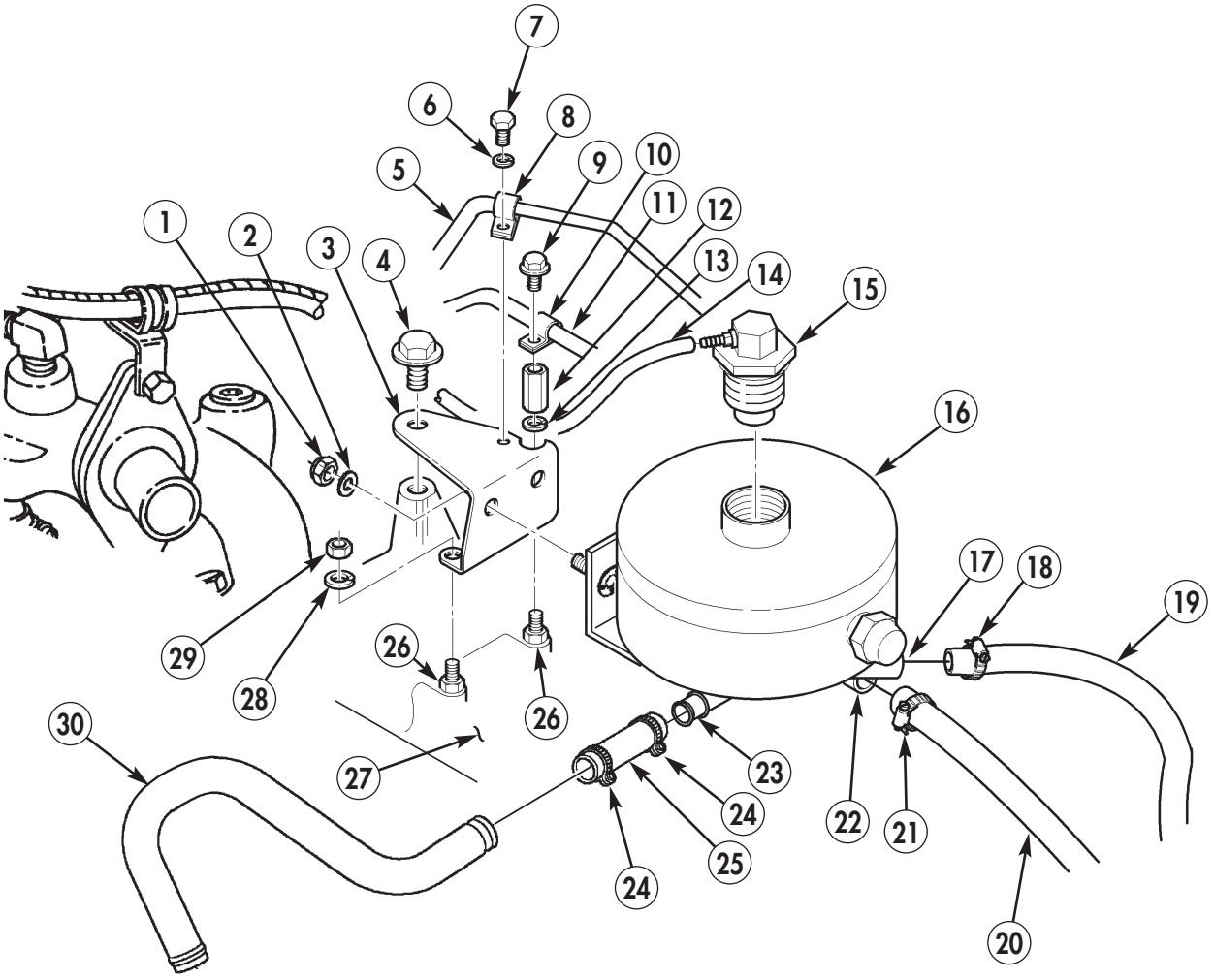

FOLLOW-ON TASK: Bleed power steering system (para. 8-27.1).

8-30. POWER STEERING RESERVOIR FILTER REPLACEMENT (P/N 94252A)

This task covers:

a. Removal **b. Installation**

INITIAL SETUP:

Tools
General mechanic's tool kit: automotive (Appendix B, Item 1)

Materials/Parts
Filter (Appendix G, Item 32.1)

Manual References
TM 9-2320-387-24-1
TM 9-2320-387-24P

Equipment Condition
Hood raised and secured (TM 9-2320-387-10).

Maintenance Level
Unit

a. Removal

NOTE

Use suitable container to catch power steering fluid.

1. Loosen band clamp (1) and remove lid (2), band clamp (1), and spring (5) from power steering reservoir (4).
2. Remove filter (3) from power steering reservoir (4). Discard filter (3).

b. Installation

1. Install filter (3) inside power steering reservoir (4).
2. Position spring (5), band clamp (1), and lid (2) on power steering reservoir (4) and secure lid (2) with band clamp (1) on power steering reservoir (4).

8-30. POWER STEERING RESERVOIR FILTER REPLACEMENT (P/N 94252A) (Cont'd)

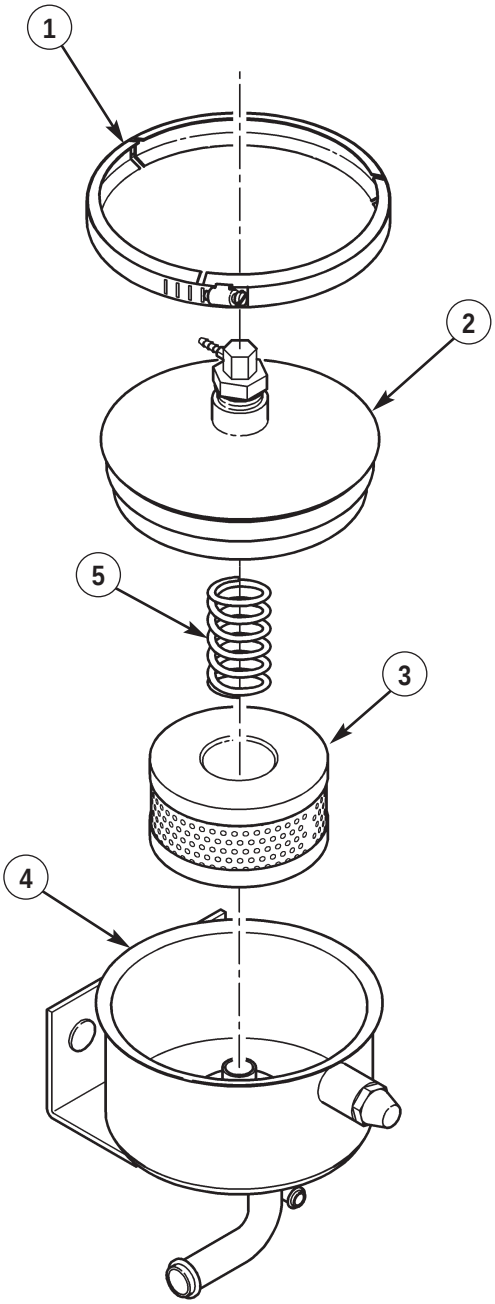

FOLLOW-ON TASK: Bleed power steering system (para. 8-27.1).

CHAPTER 9
FRAME (UNIT) MAINTENANCE

9-1. FRAME MAINTENANCE TASK SUMMARY

TASK PARA.	PROCEDURES	PAGE NO.
9-2.	Front Bumper and Towing Brackets Replacement	9-2
9-3.	Frame Extension Replacement	9-3
9-4.	Tiedown Ring Replacement	9-4
9-5.	Radiator Front Mount Bracket Replacement	9-5
9-6.	Rear Bumper Brace Replacement	9-6
9-7.	Rear Bumper Replacement	9-8
9-8.	Rear Bumper Inner Mounting Bracket Replacement	9-10
9-9.	Towing Pintle Maintenance	9-11
9-10.	Transmission Mount Crossmember Replacement	9-16

9-2. FRONT BUMPER AND TOWING BRACKETS REPLACEMENT

This task covers:

a. Removal **b. Installation**

INITIAL SETUP:

Tools
General mechanic's tool kit:
automotive (Appendix B, Item 1)
Maintenance and repair shop equipment:
automotive (Appendix B, Item 2)

Materials/Parts
Two spring washers (Appendix G, Item 318.1)
Ten locknuts (Appendix G, Item 85)
Two cotter pins (Appendix G, Item 22)

Manual References
TM 9-2320-387-24P

Equipment Condition
Winch removed (M1113 only) (para. 12-27).

Maintenance Level
Unit

a. Removal

1. Remove two cotter pins (12), nuts (11), spring washers (10), capscrews (8), and shackles (9) from towing brackets (7). Discard cotter pins (12) and spring washers (10).
2. Remove four locknuts (5), washers (6), capscrews (13), washers (6), and two towing brackets (7) from bumper (1). Discard locknuts (5).
3. Remove six locknuts (3), washers (4), capscrews (14), washers (4), and front bumper (1) from two mounting brackets (2). Discard locknuts (3).

b. Installation

1. Install front bumper (1) on two mounting brackets (2) with six washers (4), capscrews (14), washers (4), and locknuts (3). Tighten locknuts (3) to 90 lb-ft (122 N·m).
2. Install two towing brackets (7) on bumper (1) with four washers (6), capscrews (13), washers (6), and locknuts (5). Tighten locknuts (5) to 90 lb-ft (122 N·m).
3. Install two shackles (9) on towing brackets (7) with two capscrews (8), spring washers (10), nuts (11), and cotter pins (12).

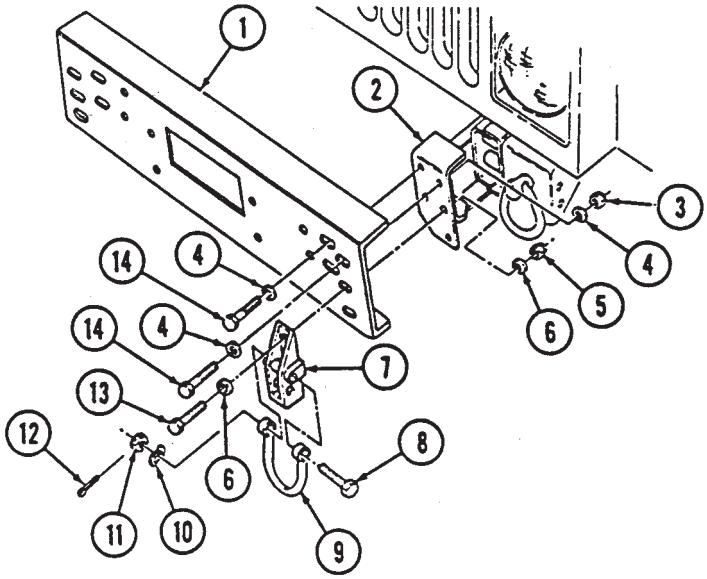

FOLLOW-ON TASK: Install winch (M1113 only) (para. 12-27).

9-3. FRAME EXTENSION REPLACEMENT

This task covers:

a. Removal **b. Installation**

INITIAL SETUP:

Tools

General mechanic's tool kit:
automotive (Appendix B, Item 1)
Maintenance and repair shop equipment:
automotive (Appendix B, Item 2)

Materials/Parts

Three locknuts (Appendix G, Item 83)

Manual References

TM 9-2320-387-24P

Equipment Condition

- Front bumper removed (para. 9-2).
- Hood and hinge removed (para. 10-7).
- Headlight housing removed (para. 10-18).
- Tiedown ring removed (para. 9-4).

Maintenance Level

Unit

a. Removal

Remove three locknuts (2), washers (3), capscrews (5), washers (3), mounting bracket (1), and frame extension (6) from frame (4). Discard locknuts (2).

b. Installation

Install mounting bracket (1) and frame extension (6) on frame (4) with three washers (3), capscrews (5), washers (3), and locknuts (2). Tighten locknuts (2) to 90 lb-ft (122 N•m).

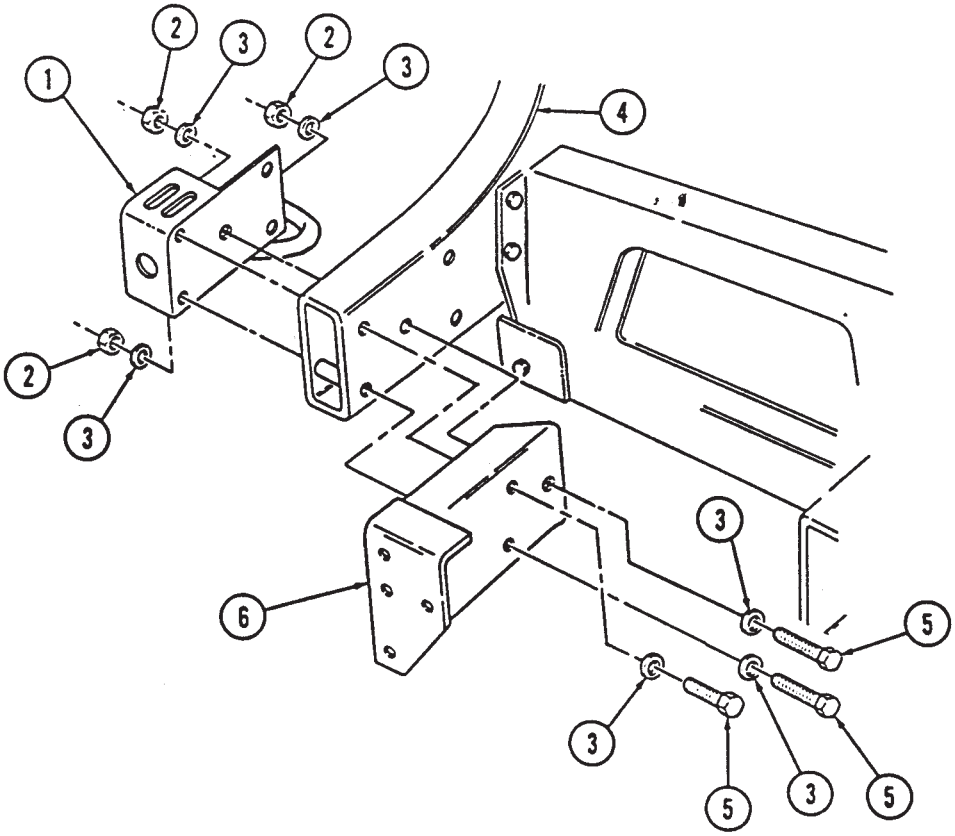

FOLLOW-ON TASKS:
- Install tiedown ring (para. 9-4).
- Install headlight housing (para. 10-18).
- Install hood and hinge (para. 10-7).
- Install front bumper (para. 9-2).

9-4. TIEDOWN RING REPLACEMENT

This task covers:

a. Removal **b. Installation**

INITIAL SETUP:

Tools

General mechanic's tool kit: automotive (Appendix B, Item 1)
Maintenance and repair shop equipment: automotive (Appendix B, Item 2)

Materials/Parts

Cotter pin (Appendix G, Item 24)

Manual References

TM 9-2320-387-24P

Maintenance Level

Unit

a. Removal

Remove cotter pin (2), nut (3), and tiedown ring (1) from mounting bracket (4). Discard cotter pin (2).

b. Installation

Install tiedown ring (1) on mounting bracket (4) with nut (3). Tighten nut (3) to 16 lb-ft (22 N·m), back off to nearest cotter pin (2) slot, and install cotter pin (2).

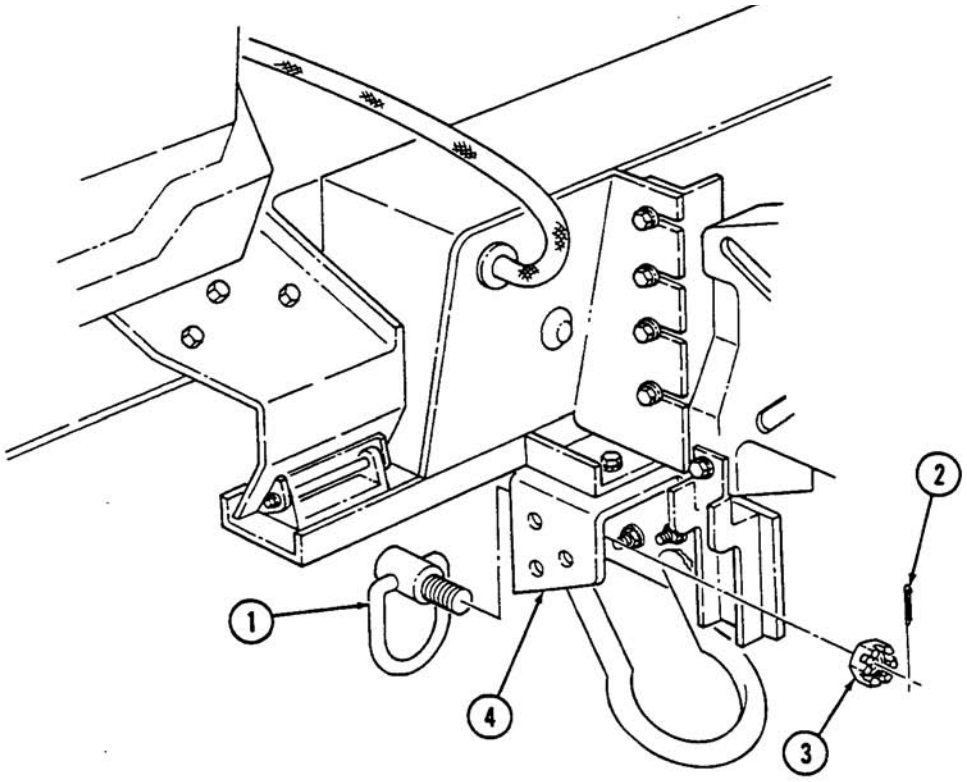

9-5. RADIATOR FRONT MOUNT BRACKET REPLACEMENT

This task covers:

a. Removal **b. Installation**

INITIAL SETUP:

Tools
General mechanic's tool kit:
automotive (Appendix B, Item 1)
Maintenance and repair shop equipment:
automotive (Appendix B, Item 2)

Materials/Parts
Two locknuts (Appendix G, Item 85)
Locknut (Appendix G, Item 92)

Manual References
TM 9-2320-387-24P

Equipment Condition
Headlight housing removed (para. 10-18).

Maintenance Level
Unit

a. Removal

1. Remove locknut (2), two washers (3), capscrew (11), washer (3), spacer (10), mount (4), and radiator (1) from front mount bracket (9). Discard locknut (2).
2. Remove two locknuts (12), washers (7), capscrews (6), washers (7), spacers (5), and bracket (9) from front suspension crossmember (8). Discard locknuts (12).

b. Installation

1. Install bracket (9) on front suspension crossmember (8) with two spacers (5), washers (7), capscrews (6), washers (7), and locknuts (12). Tighten locknuts (12) to 90 lb-ft (122 N·m).
2. Install mount (4) and radiator (1) on front mount bracket (9) with washer (3), spacer (10), capscrew (11), two washers (3), and locknut (2). Tighten locknut (2) to 30 lb-ft (41 N·m).

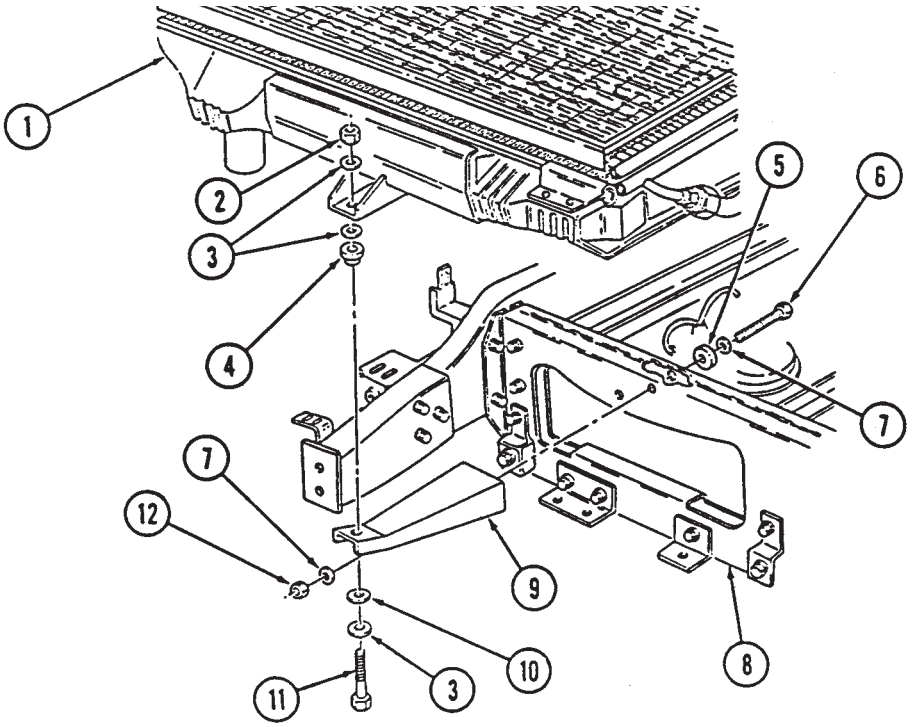

FOLLOW-ON TASK: Install headlight housing (para. 10-18).

9-6. REAR BUMPER BRACE REPLACEMENT

This task covers:

a. Removal **b. Installation**

INITIAL SETUP:

Tools
General mechanic's tool kit:
automotive (Appendix B, Item 1)
Maintenance and repair shop equipment:
automotive (Appendix B, Item 2)

Materials/Parts
Three locknuts (Appendix G, Item 85)

Manual References
TM 9-2320-387-24P

Maintenance Level
Unit

NOTE

Replacement procedures for inner and outer bumper braces are basically the same. This procedure covers the outer bumper brace.

a. Removal

1. Remove locknut (5), washer (2), capscrew (1), and washer (2) from rear bumper brace (3) and frame rail (4). Discard locknut (5).
2. Remove two locknuts (9), washers (7), capscrews (6), washers (7), and rear bumper brace (3) from rear bumper (8). Discard locknuts (9).

b. Installation

1. Install rear bumper brace (3) on rear bumper (8) with two washers (7), capscrews (6), washers (7), and locknuts (9).
2. Install rear bumper brace (3) on frame rail (4) with washer (2), capscrew (1), washer (2), and locknut (5). Tighten locknuts (5) and (9) to 90 lb-ft (122 N·m).

9-6. REAR BUMPER BRACE REPLACEMENT (Cont'd)

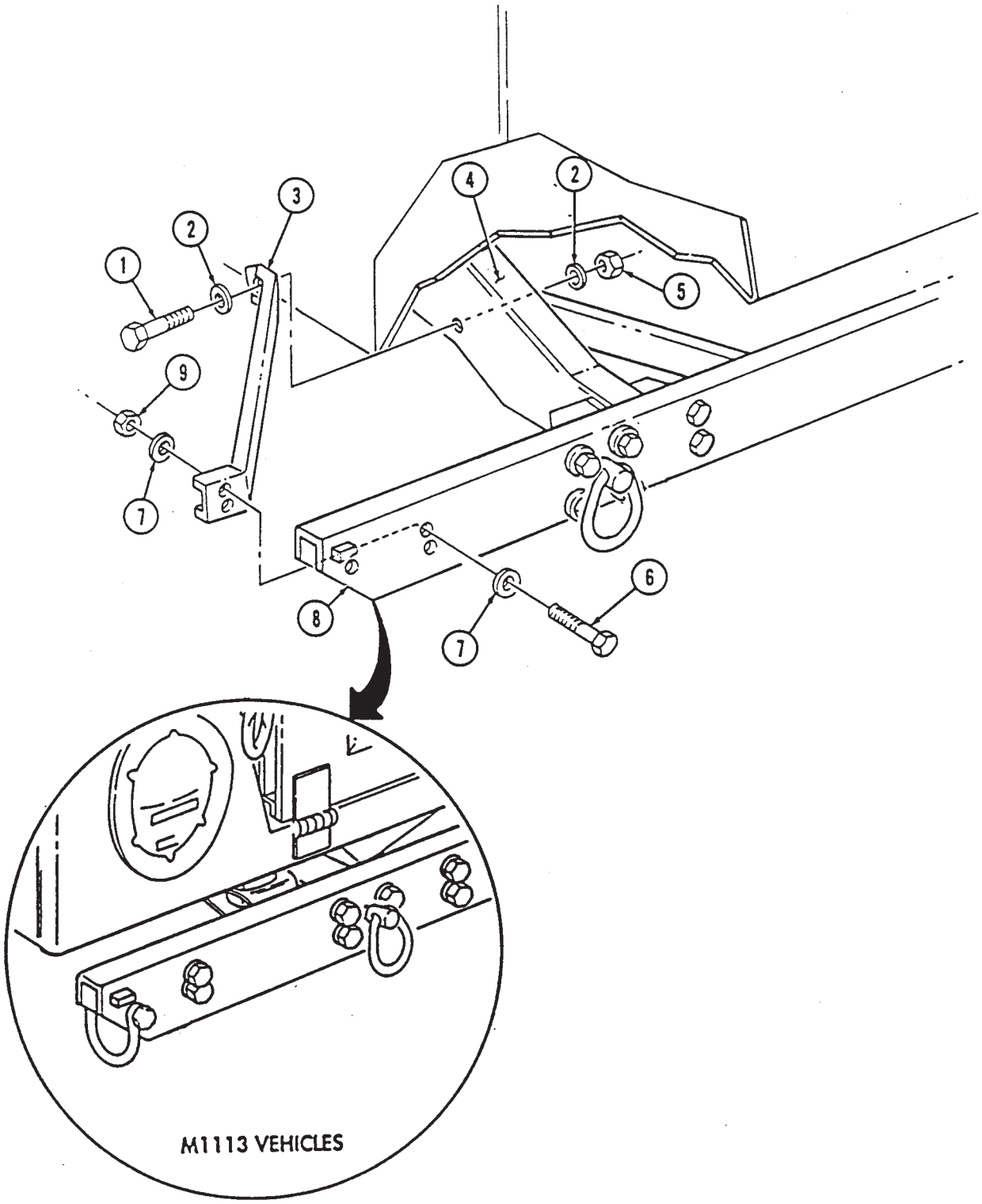

9-7. REAR BUMPER REPLACEMENT

This task covers:

a. Removal **b. Installation**

INITIAL SETUP:

Tools

General mechanic's tool kit:
automotive (Appendix B, Item 1)
Maintenance and repair shop equipment:
automotive (Appendix B, Item 2)

Materials/Parts

Sixteen locknuts (Appendix G, Item 85)
Six assembled locknuts (Appendix G, Item 134)
Two cotter pins (Appendix G, Item 22)
Two cotter pins (Appendix G, Item 24)
Two spring washers (Appendix G, Item 318.1)

Personnel Required

One mechanic
One assistant

Manual References

TM 9-2320-387-24P

Equipment Condition

Towing pintle removed (para. 9-9).

Maintenance Level

Unit

a. Removal

1. Remove four assembled locknuts (7), capscrews (13), and trailer receptacle cover (14) from trailer receptacle (8). Discard assembled locknuts (7).
2. Remove two assembled locknuts (9), capscrews (12), plate (11), and trailer receptacle (8) from rear bumper (10). Discard assembled locknuts (9).
3. Remove four locknuts (23), washers (20), capscrews (19), and washers (20) from rear bumper (10) and two braces (22). Discard locknuts (23).
4. Remove two cotter pins (1), nuts (2), and tiedown rings (16) from rear bumper (10) and two mounting brackets (3). Discard cotter pins (1).

NOTE

Perform step 5 on M1113 vehicles only.

5. Remove two cotter pins (28), nuts (27), spring washers (24), capscrews (26), and shackles (25) from rear bumper (10). Discard cotter pins (28) and spring washers (24).
6. Remove eight locknuts (21), washers (18), capscrews (17), and washers (18) from rear bumper (10) and two mounting brackets (3). Discard locknuts (21).
7. Remove four locknuts (4), washers (5), capscrews (15), washers (5), and rear bumper (10) from two inner mounting brackets (6). Discard locknuts (4).

b. Installation

1. Install rear bumper (10) on two inner mounting brackets (6) with four washers (5), capscrews (15), washers (5), and locknuts (4). Tighten locknuts (4) to 90 lb-ft (122 N·m).
2. Install rear bumper (10) on two mounting brackets (3) with eight washers (18), capscrews (17), washers (18), and locknuts (21). Tighten locknuts (21) to 90 lb-ft (122 N·m).

NOTE

Perform steps 3 and 4 on M1113 vehicles only.

3. Install two shackles (25) on rear bumper (10) with two capscrews (26), spring washers (24), and slotted nuts (27). Tighten slotted nuts (27) to 15-20 lb-ft (20-27 N·m).
4. Back off two slotted nuts (27) to align with hole in capscrews (26) and install two cotter pins (28) in slotted nuts (27).

9-7. REAR BUMPER REPLACEMENT (Cont'd)

5. Install two tiedown rings (16) on rear bumper (10) and two mounting brackets (3) with nuts (2). Tighten nuts (2) to 16 lb-ft (22 N·m), back off to the nearest cotter pin (1) slot, and install two cotter pins (1).
6. Install rear bumper (10) on two braces (22) with four washers (20), capscrews (19), washers (20), and locknuts (23). Tighten locknuts (23) to 90 lb-ft (122 N·m).
7. Install plate (11) and trailer receptacle (8) on rear bumper (10) with two capscrews (12) and assembled locknuts (9). Tighten assembled locknuts (9) to 8 lb-ft (11 N.m).
8. Install trailer receptacle cover (14) on trailer receptacle (8) and rear bumper (10) with four capscrews (13) and assembled locknuts (7). Tighten assembled locknuts (7) to 8 lb-ft (11 N·m).

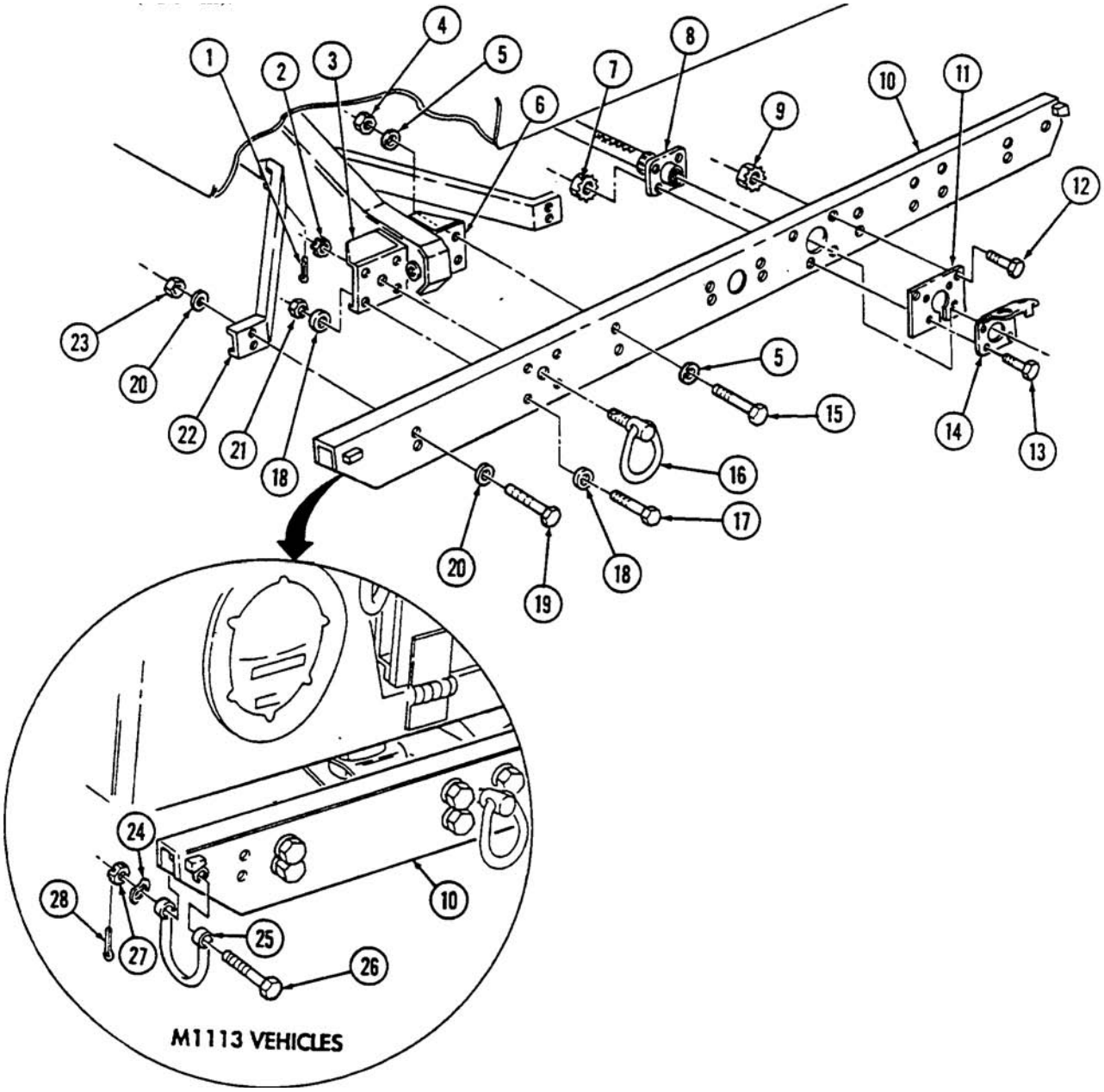

FOLLOW-ON TASK: Install towing pintle (para. 9-9).

9-8. REAR BUMPER INNER MOUNTING BRACKET REPLACEMENT

This task covers:

a. Removal **b. Installation**

INITIAL SETUP:

Tools
General mechanic's tool kit: automotive (Appendix B, Item 1)
Maintenance and repair shop equipment: automotive (Appendix B, Item 2)

Materials/Parts
Six locknuts (Appendix G, Item 85)

Manual References
TM 9-2320-387-24P

Maintenance Level
Unit

a. Removal

1. Remove two locknuts (3), washers (4), capscrews (9), and washers (4) from bracket (7) and rear bumper (1). Discard locknuts (3).

NOTE

Spacer is present on M1114 vehicle only.

2. Remove four locknuts (10), washers (6), capscrews (5), washers (6), bracket (7), and spacer (8) from frame rail (2). Discard locknuts (10).

b. Installation

NOTE

- Spacer is present on M1114 vehicle only.
- Ensure spacer on outer side of frame rail is in position before installing spacer and bracket.

1. Install spacer (8) and bracket (7) on frame rail (2) with four washers (6), capscrews (5), washers (6), and locknuts (10). Tighten capscrews (5) to 90 lb-ft (122 N·m).
2. Install bracket (7) on rear bumper (1) with two washers (4), capscrews (9), washers (4), and locknuts (3). Tighten locknuts (3) to 90 lb-ft (122 N·m).

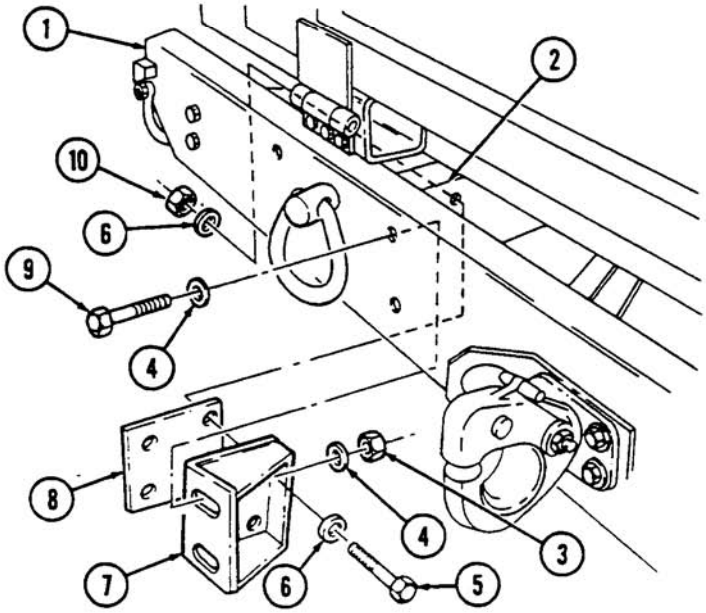

9-9. TOWING PINTLE MAINTENANCE

This task covers:

a. Removal
b. Disassembly
c. Cleaning
d. Assembly
e. Installation

INITIAL SETUP:

Tools

General mechanic's tool kit:
automotive (Appendix B, Item 1)
Maintenance and repair shop equipment:
automotive (Appendix B, Item 2)

Materials/Parts

Two cotter pins (Appendix G, Item 25)
Drivescrew (Appendix G, Item 30)
Two locknuts (Appendix G, Item 86)
Four locknuts (Appendix G, Item 133.1)
Drycleaning solvent (Appendix C, Item 26)

Manual References

TM 9-2320-387-10
TM 9-2320-387-24P

General Safety Instructions

Drycleaning solvent is flammable and will not be used near an open flame.

Maintenance Level

Unit

NOTE

Contact DS maintenance for fabrication instructions of optional towing pintle.

a. Removal

NOTE

- Perform steps 1 and 2 for rear-mounted towing pintle.
- Perform steps 3 and 4 for optional towing pintle mounted to the front bumper.

1. Remove cotter pin (3), slotted nut (2), washer (4), and towing pintle (9) from rear bumper (7). Discard cotter pin (3).
2. Remove four nuts (1), washers (11), capscrews (10), washers (11), two support plates (6), backing plate (5), and safety chain plate (8) from rear bumper (7).

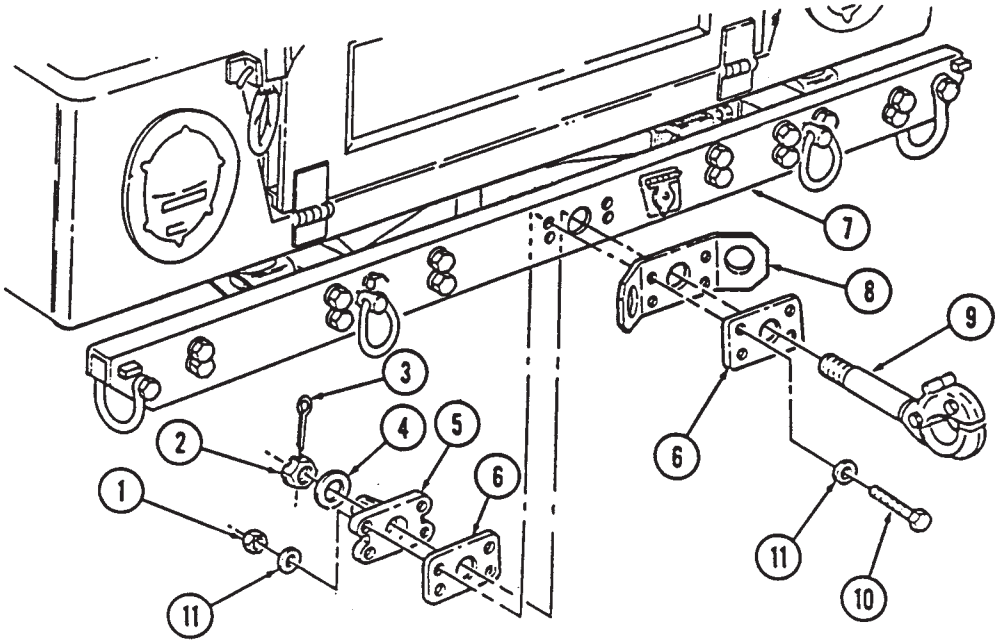

9-9. TOWING PINTLE MAINTENANCE (Cont'd)

3. Remove cotter pin (4), slotted nut (6), washer (5), and towing pintle (3) from front bumper (1). Discard cotter pin (4).
4. Remove four locknuts (9), washers (8), capscrews (10), washers (8), front plate (2), and back plate (7) from front bumper (1). Discard locknuts (9).

OPTIONAL

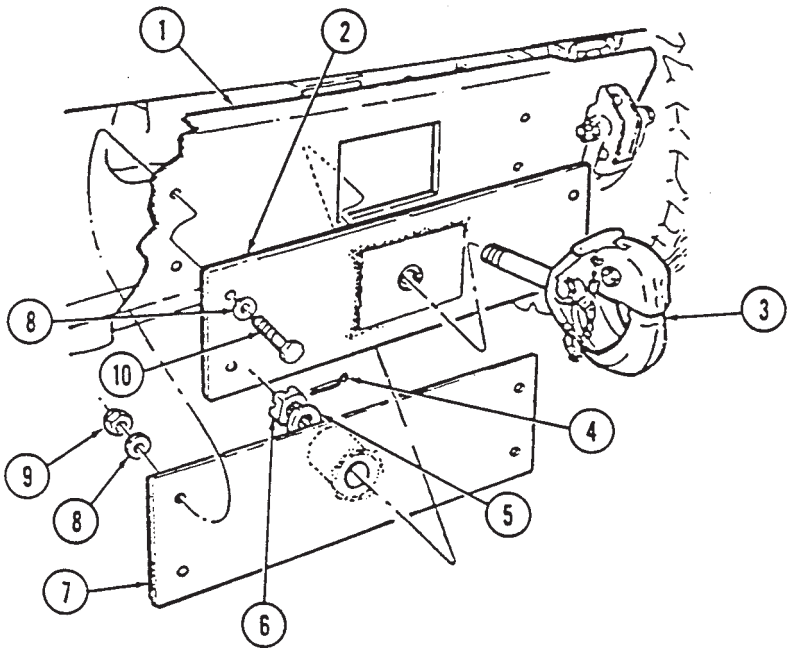

b. Disassembly

NOTE

Perform step 1 for rear-mounted towing pintle.

1. Remove grease fitting (12) from backing plate (11).
2. Remove cotter pin (15) from towing pintle latch (20).
3. Remove locknut (21), capscrew (19), pintle latch lock (17), and spring (16) from towing pintle latch (20). Discard locknut (21).
4. Remove locknut (24), capscrew (18), and towing pintle latch (20) from towing pintle hook (22). Discard locknut (24).
5. Remove cotter pin (15) from pintle lock chain hook (14). Discard cotter pin (15).
6. Remove drivescrew (23) and pintle lock chain (13) from towing pintle hook (22). Discard drivescrew

c. Cleaning

WARNING

Drycleaning solvent is flammable and will not be used near an open flame. A fire extinguisher will be kept nearby when the solvent is used. Use only in well-ventilated places. Failure to do this may result in injury to personnel and/or damage to equipment.

Clean all metallic parts with drycleaning solvent.

9-9. TOWING PINTLE MAINTENANCE (Cont'd)

d. Assembly

1. Install pintle lock chain (13) on towing pintle hook (22) with drivescrew (23).
2. Install cotter pin (15) on pintle lock chain (13) with pintle lock chain hook (14).
3. Install towing pintle latch (20) on towing pintle hook (22) with capscrew (18) and locknut (24). Tighten locknut (24) to 15 lb-ft (20 N·m).
4. Install spring (16) and pintle latch lock (17) on towing pintle latch (20) with capscrew (19) and locknut (21). Tighten locknut (21) to 15 lb-ft (20 N·m).
5. Install cotter pin (15) in pintle latch (20).

NOTE

Perform step 6 for rear-mounted towing pintle.

6. Install grease fitting (12) in backing plate (11).

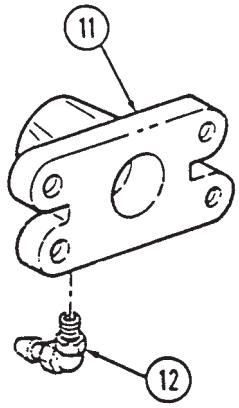

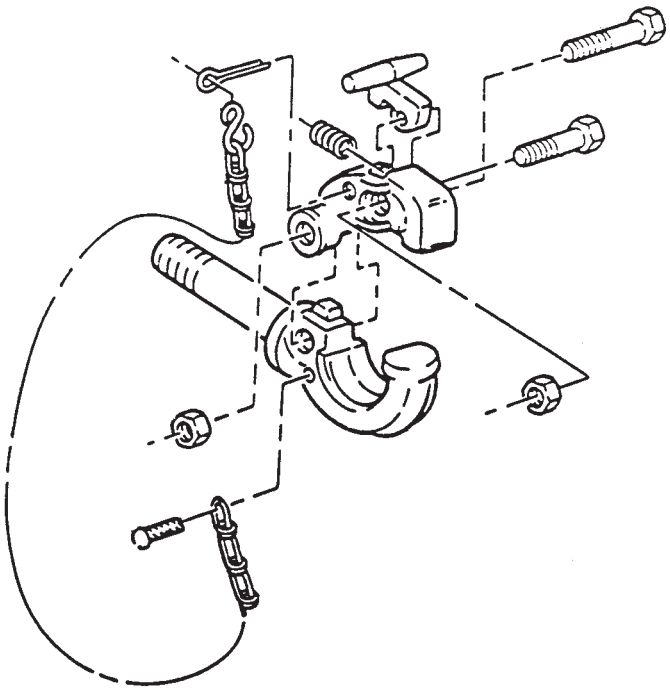

9-9. TOWING PINTLE MAINTENANCE (Cont'd)

e. Installation

NOTE

- Perform steps 1 through 3 for rear-mounted towing pintle.
- Perform steps 4 through 6 for optional towing pintle mounted to the front bumper.
- Grease fitting on backing plate must face downward.

1. Install safety chain plate (8), two support plates (6), and backing plate (11) on rear bumper (7) with four washers (2), capscrews (10), washers (2), and nuts (1).
2. Install towing pintle (9) on rear bumper (7) and tighten nuts (1) to 90 lb-ft (122 N·m).
3. Secure towing pintle (9) to backing plate (11) with washer (5) and slotted nut (3). Loosen slotted nut (3) slightly if towing pintle (9) will not rotate easily. Install cotter pin (4) in slotted nut (3).
4. Install front plate (13) and back plate (18) on front bumper (12) with four washers (19), capscrews (21), washers (19), and locknuts (20). Tighten locknuts (20) to 90 lb-ft (122 N·m).
5. Install towing pintle (14) on front plate (13) and back plate (18) with washer (16) and slotted nut (17).
6. Tighten slotted nut (17) until towing pintle (14) is tight. Back off nut (17) until towing pintle (14) rotates freely and hole in towing pintle (14) shaft aligns with slot in nut (17). Install cotter pin (15).

9-9. TOWING PINTLE MAINTENANCE (Cont'd)

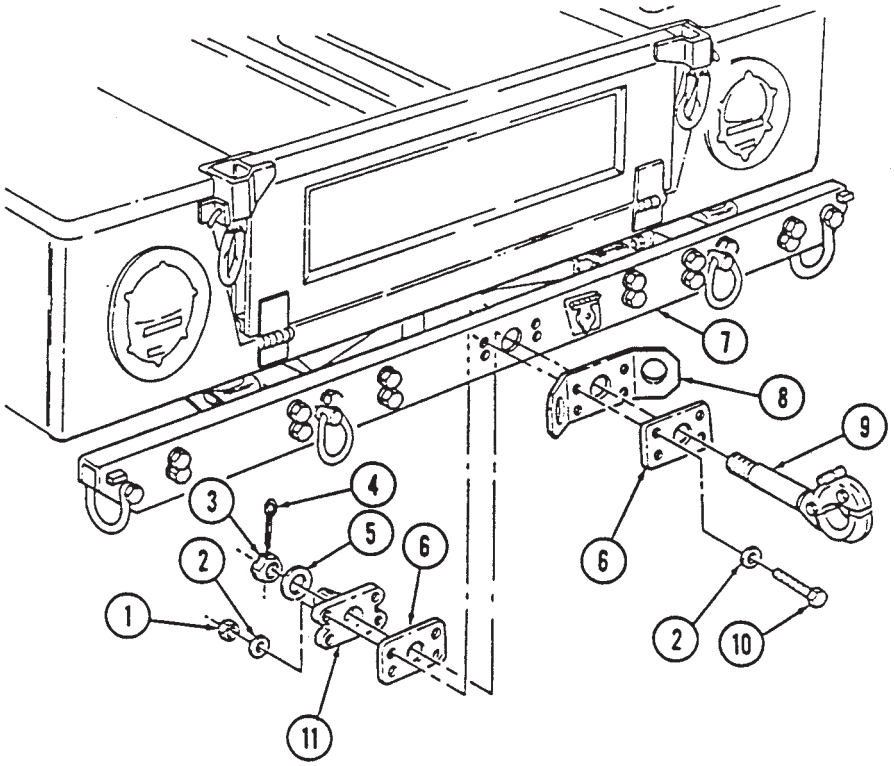

OPTIONAL

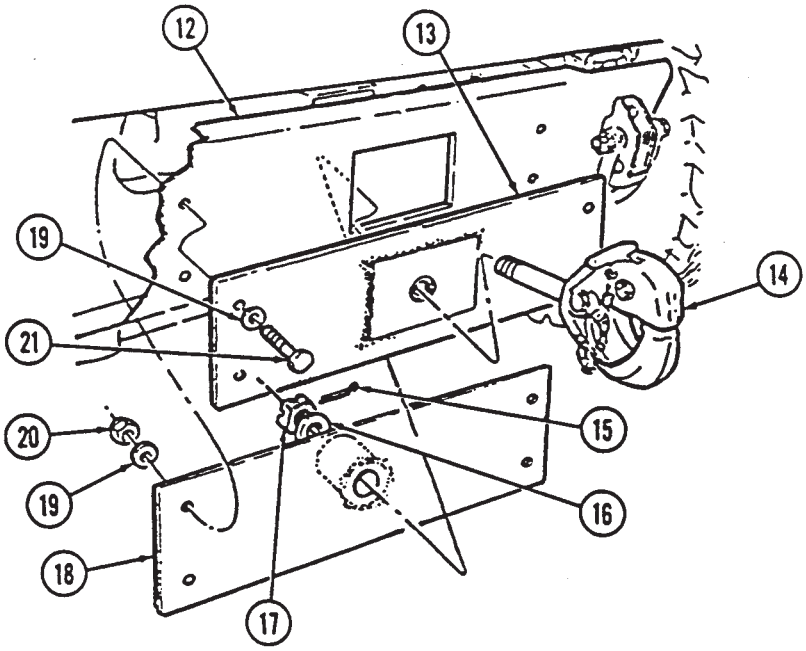

FOLLOW-ON TASK: Lubricate rear-mounted towing pintle (TM 9-2320-387-10).

9-10. TRANSMISSION MOUNT CROSSMEMBER REPLACEMENT

This task covers:

a. Removal **b. Installation**

INITIAL SETUP:

Tools

General mechanic's tool kit: automotive (Appendix B, Item 1)
Maintenance and repair shop equipment: automotive (Appendix B, Item 2)

Materials/Parts

Two locknuts (Appendix G, Item 102)
Two locknuts (Appendix G, Item 106)

Manual References

TM 9-2320-387-24P

Maintenance Level

Unit

CAUTION

Transmission must be supported during removal and installation of transmission mount crossmember to prevent damage to equipment.

a. Removal

1. Place support under transmission (2) and remove two locknuts (6), washers (5), capscrew (4), and washer (5) from crossmember (7) and two support brackets (1). Discard locknuts (6).
2. Remove two locknuts (9), washers (8), and crossmember (7) from transmission mount (3). Discard locknuts (9).

b. Installation

1. Install crossmember (7) on transmission mount (3) with two washers (8) and locknuts (9). Tighten locknuts (9) to 28 lb-ft (38 N·m).
2. Install crossmember (7) on two support brackets (1) with washer (5), capscrew (4), two washers (5), and locknuts (6). Tighten locknuts (6) to 90 lb-ft (122 N·m).
3. Remove support from under transmission (2).

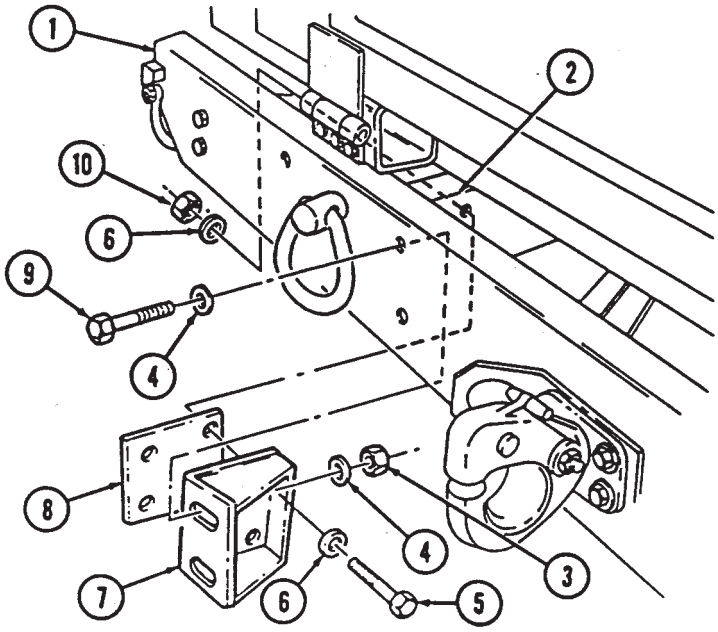

9-10. TRANSMISSION MOUNT CROSSMEMBER REPLACEMENT (Cont'd)

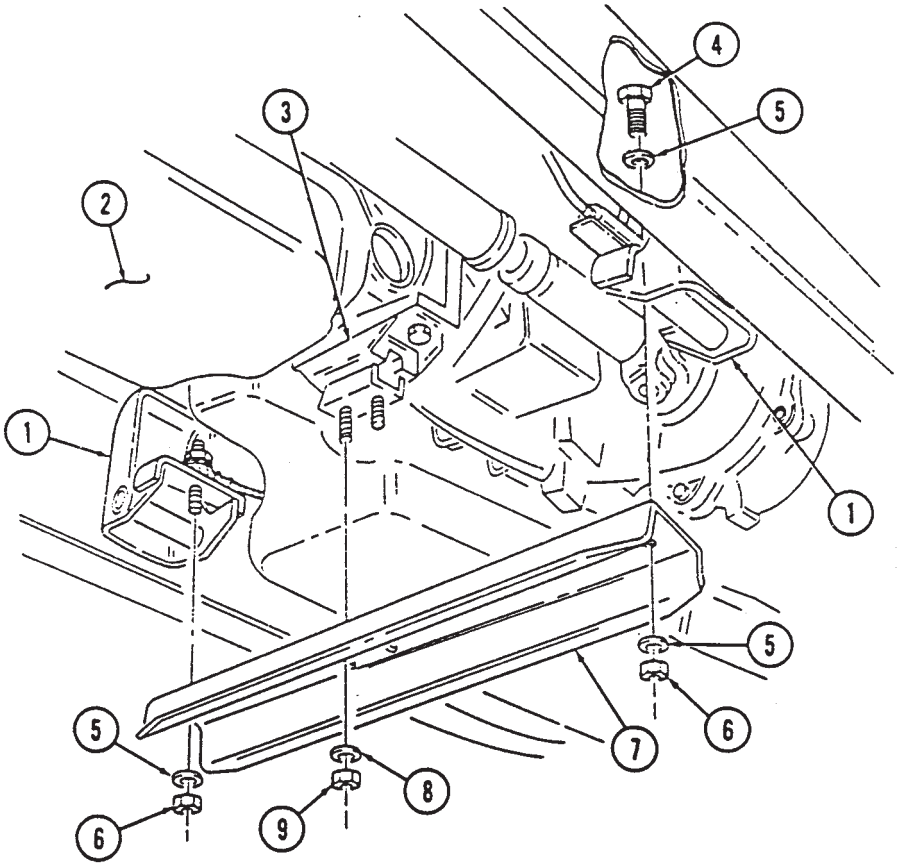

INDEX

	Para.	Page
A		
AB-652/GR antenna:		
Installation	12-23b	12-39
Removal	12-23a	12-39
A-beam left side armor:		
Installation	11-42b	11-86
Removal	11-42a	11-86
A-beam right side armor:		
Installation	11-43b	11-88
Removal	11-43a	11-88
A/C and de-ice relays:		
Installation	25-34b	25-92
Removal	25-34a	25-90
A/C blower motor:		
Installation	25-25b	25-67
Removal	25-25a	25-67
A/C compressor:		
Installation	25-20b	25-56
Removal	25-20a	25-56
A/C compressor hose:		
Inspection	25-30a.1	25-78
Installation	25-30b	25-78.2
Removal	25-30a	25-78
A/C compressor manifold:		
Installation	25-20.1b	25-56.2
Removal	25-20.1a	25-56.2
A/C condenser:		
Inspection	25-18a.1	25-52
Installation	25-18b	25-52
Removal	25-18a	25-52
A/C condenser assembly:		
Assembly	25-28b	25-74
Disassembly	25-28a	25-74
A/C condenser fan and shroud:		
Installation	25-19b	25-54
Removal	25-19a	25-54
A/C condenser hose assemblies:		
Installation	25-33b	25-88
Removal	25-33a	25-88
A/C coolant line covers:		
Inspection	25-32b	25-84
Installation	25-32c	25-86
Removal	25-32a	25-84
A/C evaporator assembly (rear):		
Assembly	25-27b	25-72
Disassembly	25-27a	25-72
Inspection	25-22a.1	25-62
Installation	25-22b	25-62
Removal	25-22a	25-62
A/C evaporator (rear) supply and return line:		
Installation	25-29b	25-76
Removal	25-29a	25-76

	Para.	Page
A (Cont'd)		
A/C front air distribution duct:		
Installation	11-81b	11-146
Removal	11-81a	11-146
A/C front air distribution duct registers:		
Installation	11-82b	11-148
Removal	11-82a	11-148
A/C front evaporator drain hose:		
Installation	11-83b	11-149
Removal	11-83a	11-149
A/C heater/evaporator assembly (front):		
Assembly	25-26b	25-70
Disassembly	25-26a	25-68
Installation	25-21b	25-60
Removal	25-21a	25-58
A/C pressure hoses:		
Inspection	25-31a.1	25-80
Installation	25-31b	25-82
Removal	25-31a	25-80
A/C rear air distribution duct and register:		
Inspection	11-87b	11-156
Installation	11-87c	11-156
Removal	11-87a	11-156
A/C rear evaporator drain hose:		
Installation	11-88b	11-158
Removal	11-88a	11-158
A/C receiver/dryer (front):		
Inspection	25-16b	25-48
Installation	25-16c	25-48
Removal	25-16a	25-48
A/C receiver/dryer (rear):		
Installation	25-17b	25-50
Removal	25-17a	25-50
A/C receiver/dryer (rear) lines:		
Installation	25-17.1b	25-50.2
Removal	25-17.1a	25-50.2
A/C system servicing:		
Adding refrigerant oil	25-15g	25-47
Charging system	25-15f	25-46
Discharging system	25-15c	25-40
Evacuating system	25-15e	25-44
Flushing system	25-15d	25-42
Manifold gauge set installation	25-15a	25-39
Manifold gauge set removal	25-15b	25-40
A/C thermostat:		
Installation	25-24b	25-66
Removal	25-24a	25-66
A/C toggle switch and harness:		
Installation	11-84b	11-150
Removal	11-84a	11-150

INDEX (Cont'd)

	Para.	Page
A (Cont'd)		
A/C trinary switch:		
Installation	25-23b	25-64
Removal	25-23a	25-64
A/C wiring harness and cable:		
Inspection	25-35b	25-102
Installation	25-35c	25-104
Removal	25-35a	25-94
Accelerator cable mounting bracket:		
Inspection	16-10b	16-20
Installation	16-10c	16-20
Removal	16-10a	16-20
Accelerator linkage:		
Adjustment	3-43d	3-84
Inspection	3-43b	3-83
Installation	3-43c	3-84
Removal	3-43a	3-82
Accelerator pedal:		
Installation	3-44b	3-86
Removal	3-44a	3-86
Accelerator system maintenance task summary	3-42	3-81
Access cover, cargo floor:		
Installation	10-58.3	10-98.20
Access hole cover plate:		
Inspection	25-36b	25-114
Installation	25-36c	25-114
Removal	25-36a	25-114
Actuator assembly, parking lock pawl and:		
Inspection	28-6	28-24
Actuator, wastegate:		
Installation	15-19b	15-36
Removal	15-19a	15-36
Adapter plate, water pump and:		
Inspection	3-78b	3-134
Installation	3-78c	3-136
Removal	3-78a	3-134
Adjustable gunner stand:		
Installation	11-71.3b	11-132.6
Removal	11-71.3a	11-132.6
Air cleaner assembly and dust unloader:		
Inspection	3-12b	3-22
Installation	3-12c	3-22
Removal	3-12a	3-22
Air cleaner dust cap:		
Installation	12-40b	12-74
Removal	12-40a	12-74
Air cleaner filter element:		
Cleaning	3-13d	3-26
Emergency cleaning	3-13c	3-24
Inspection	3-13b	3-24
Installation	3-13e	3-26
Removal	3-13a	3-24
Air cleaner shield:		
Inspection	12-39b	12-72
Installation	12-39c	12-72
Removal	12-39a	12-72
Air cleaner-to-selector valve vent line:		
Installation	12-41b	12-75
Removal	12-41a	12-75
Air conditioning maintenance task summary	11-80	11-145
Air conditioning maintenance task summary	25-14	25-37
Air conditioning system operation, M1114	1-29	1-39
Air conditioning troubleshooting instructions (DS/GS)	14-4	14-17
Air distribution duct, A/C front:		
Installation	11-81b	11-146
Removal	11-81a	11-146
Air distribution duct registers, A/C front:		
Installation	11-82b	11-148
Removal	11-82a	11-148
Air duct assembly:		
Installation	10-74b	10-126
Removal	10-74a	10-126
Air horn:		
Installation	3-14b	3-28
Removal	3-14a	3-28
Air horn support bracket (M1113):		
Installation	3-16b	3-31
Removal	3-16a	3-31
Air horn support bracket (M1114):		
Installation	25-13.1b	25-36.1
Removal	25-13.1a	25-36.1
Air horn-to-air cleaner elbow:		
Installation	3-15b	3-30
Removal	3-15a	3-30
Air intake and fuel pump vent lines:		
Installation	3-21b	3-37
Removal	3-21a	3-37
Air intake assembly and bracket:		
Installation	3-19b	3-34
Removal	3-19a	3-34
Air intake/exhaust tests	2-29	2-141
Airlift bracket-to-hood seal:		
Installation	10-55b	10-90
Removal	10-55a	10-90

INDEX (Cont'd)

	Para.	Page
A (Cont'd)		
Airlift-to-shroud shield assembly:		
Installation	3-63b	3-118
Removal	3-63a	3-118
Air restriction gauge:		
Installation	3-17b	3-32
Removal	3-17a	3-32
Air restriction gauge hose:		
Installation	3-20b	3-36
Removal	3-20a	3-36
Alignment instructions, suspension:		
Caster and camber adjustment	34-3b	34-2
Caster and camber check	34-3a	34-1
Toe check and adjustment	34-3c	34-3
Alternator, 200-ampere dual voltage:		
Assembly	18-3e	18-10
Cleaning	18-3d	18-6
Disassembly	18-3b	18-6
Installation	4-5b	4-10
Output testing	18-3a	18-2
Removal	4-5a	4-8
Static testing	18-3c	18-8
Alternator, 400-ampere dual voltage:		
Assembly	18-3.1e	18-10.11
Cleaning	18-3.1d	18-10.11
Disassembly	18-3.1b	18-10.8
Installation	4-8.3b	4-18.12
Output testing	18-3.1a	18-10.2
Removal	4-8.3a	4-18.12
Static testing	18-3.1c	18-10.10
Alternator cable, 200-ampere dual voltage:		
Installation	4-6b	4-12
Removal	4-6a	4-12
Alternator cable, 400-ampere dual voltage:		
Installation	4-8.2b	4-18.8
Removal	4-8.2a	4-18.4
Alternator/power steering mounting bracket:		
Installation	4-3b	4-4
Removal	4-3a	4-4
Alternator clutch pulley (serial numbers 196901 and above):		
Installation	4-2.1b	4-2.2
Removal	4-2.1a	4-2.2
Alternator pulley:		
Installation	4-2b	4-2
Removal	4-2a	4-2
A (Cont'd)		
Alternator/power steering mounting bracket (serial numbers (196901 and above):		
Installation	4-3.1b	4-4
Removal	4-3.1a	4-4
Alternator tests	2-33	2-199
Ammo box tray (40 mm), triple:		
Installation	11-69b	11-130
Removal	11-69a	11-130
Ammo box tray (caliber .50), double:		
Inspection	11-68a.1	11-129
Installation	11-68b	11-129
Removal	11-68a	11-129
Antenna, AB-652/GR:		
Installation	12-23b	12-39
Removal	12-23a	12-39
Antenna, AS 1729/VRC:		
Installation	12-21b	12-37
Removal	12-21a	12-37
Antenna cables, rear:		
Installation	12-24b	12-43
Removal	12-24a	12-40
Antenna ground strap:		
Installation	12-20b	12-36
Removal	12-20a	12-35
Antenna mounting bracket, rear:		
Installation	12-22b	12-38
Removal	12-22a	12-38
A-pillar armor, left side:		
Inspection	11-32b	11-58
Installation	11-32c	11-58
Removal	11-32a	11-58
A-pillar armor, right side:		
Inspection	11-33b	11-60
Installation	11-33c	11-60
Removal	11-33a	11-60
A-pillar former assembly:		
Inspection	10-90b	10-152
Installation	10-90c	10-152
Removal	10-90a	10-152
Armament carrier maintenance task summary	25-2	25-1
Armor, B-pillar:		
Installation	11-44b	11-90
Removal	11-44a	11-90
Armor brush seal, turret:		
Installation	11-51b	11-102
Removal	11-51a	11-102
Armor, cowl:		
Inspection	11-49b	11-98
Installation	11-49c	11-98
Removal	11-49a	11-98

INDEX (Cont'd)

	Para.	Page
A (Cont'd)		
Armor, firewall:		
Inspection	11-48b	11-96
Installation	11-48c	11-96
Removal	11-48a	11-96
Armor, left front underbody:		
Inspection	11-36b	11-67
Installation	11-36c	11-68
Removal	11-36a	11-66
Armor, left front underbody:		
New driver's side footwell inner armor installation	11-36.1b	11-68.4
New driver's side footwell outer armor installation	11-36.1a	11-68.2
New front underbody armor installation	11-36.1c	11-68.5
Armor, left rear underbody:		
Inspection	11-37b	11-70
Installation	11-37c	11-72
Removal	11-37a	11-70
Armor plate, tailgate:		
Installation	11-47b	11-95
Removal	11-47a	11-95
Armor, right front underbody:		
Inspection	25-13.4b	25-36.35
Installation	25-13.4c	25-36.36
Removal	25-13.4a	25-36.34
Armor, right front underbody:		
New passenger side footwell inner armor and inner/outer cowl reinforcement installation	25-13.3c	25-36.24
New passenger side footwell outer armor installation	25-13.3b	25-36.22
New passenger side footwell upper armor installation	25-13.3a	25-36.21
New right front underbody armor installation	25-13.3d	25-36.26
Armor, right rear underbody:		
Inspection	11-39b	11-78
Installation	11-39c	11-80
Removal	11-39a	11-78
Armor and seal, turret:		
Installation	11-52b	11-103
Removal	11-52a	11-103
Army equipment, destruction of, to prevent enemy use	1-3	1-1
AS 1729/VRC antenna:		
Installation	12-21b	12-37
Removal	12-21a	12-37
Assembly:		
General maintenance	2-17	2-33

	Para.	Page
A (Cont'd)		
Auxiliary fuel pickup and return lines:		
Installation	3-27b	3-54
Removal	3-27a	3-54
Axle free play tolerance, differential and:		
Inspection	21-9	21-20
Axles, and suspension, propeller shafts, maintenance task summary	21-2	21-1
Axles, front and rear, maintenance task summary	6-6	6-12
B		
Backrest, turret:		
Installation	11-54b	11-106
Removal	11-54a	11-106
Backup light switch:		
Installation	4-36b	4-62
Removal	4-36a	4-62
Balancing, tire	8-8	8-22
Ball joint, lower:		
Inspection	6-24a	6-54
Installation	6-24c	6-54
Removal	6-24b	6-54
Ball joint, upper:		
Inspection	6-23a	6-50.2
Installation	6-23c	6-52
Removal	6-23b	6-52
Battery:		
Installation	4-74c	4-128
Removal	4-74a	4-128
Servicing	4-74b	4-128
Battery box cover catch:		
Installation	10-42b	10-72
Removal	10-42a	10-72
Battery box cover, companion seat assembly and:		
Installation	10-43b	10-73
Removal	10-43a	10-73
Battery cable:		
Cleaning and inspection	4-68a	4-110
Ground cable installation	4-68e	4-112
Ground cable removal	4-68d	4-112
Ground cables disconnection	4-68b	4-111
Ground cables reconnection	4-68c	4-111
Interconnecting cable installation	4-68g	4-113
Interconnecting cable removal	4-68f	4-113
Positive cable installation	4-68i	4-114
Positive cable removal	4-68h	4-114

INDEX (Cont'd)

	Para.	Page
B (Cont'd)		
Battery cable terminal clamp:		
Installation	4-67b	4-108
Removal	4-67a	4-108
Battery circuit tests	2-35	2-237
Battery holddown:		
Installation	4-73b	4-126
Removal	4-73a	4-126
Battery system maintenance task summary	4-66	4-107
Battery system operation	1-23	1-30
Battery tray:		
Cleaning and inspection	4-75b	4-130
Installation	4-75d	4-130
Preventive modification	4-75c	4-130
Removal	4-75a	4-130
Bearing adjustment, geared hub spindle	6-12	6-35
Belt, runflat compressor (P/N 528236):		
Installation	8-6b	8-18
Removal	8-6a	8-18
Belt, runflat compressor (P/N J39250):		
Installation	8-5b	8-17
Removal	8-5a	8-17
Blackout drive light assembly:		
Installation	4-51b	4-86
Removal	4-51a	4-86
Blackout drive light lamp:		
Installation	4-52b	4-88
Removal	4-52a	4-88
Blade and arm, windshield wiper:		
Installation	10-62c	10-104
Removal	10-62a	10-104
Repair (optional)	10-62b	10-104
Bleeding, power steering system (P/N 1200359)	8-27.1	8-74.1
Bleeding, power steering system (RCSK 18330)	8-27	8-74
Body accessories maintenance task summary	10-59	10-100
Body hinge mount:		
Installation	10-54b	10-89
Removal	10-54a	10-89
Body maintenance task summary	10-1	10-1
Body mount:		
Installation	33-3b	33-2
Removal	33-3a	33-2
Body repair (GS):		
Aluminum repair	33-8	33-10
Fiberglass repair	33-9	33-16
General	33-5	33-5
Inspection	33-6	33-5
Maintenance task summary	33-2	33-1
Repair task summary	33-4	33-4
Rivet replacement	33-7	33-7

	Para.	Page
B (Cont'd)		
Body repair materials: appendix F		F-1
Body repair (unit):		
General	10-56a	10-91
Inspection	10-56b	10-92
Rivet replacement	10-56c	10-92
Body wiring harness:		
Installation	27-3b	27-22
Removal	27-3a	27-22
Body wiring maintenance task summary	27-2	27-1
Boot, fuel injection pump:		
Installation	3-23b	3-39
Removal	3-23a	3-39
Boot, heater:		
Installation	10-85b	10-147
Removal	10-85a	10-147
Bottom left side armor, C-pillar:		
Inspection	11-46a.1	11-94
Installation	11-46b	11-94
Removal	11-46a	11-94
B-pillar:		
Installation	10-57b	10-97
Removal	10-57a	10-97
B-pillar armor:		
Installation	11-44b	11-90
Removal	11-44a	11-90
Brace, rear bumper:		
Installation	9-6b	9-6
Removal	9-6a	9-6
Bracket, airlift,-to-hood seal:		
Installation	10-55b	10-90
Removal	10-55a	10-90
Bracket, alternator/power steering mounting:		
Installation	4-3b	4-4
Removal	4-3a	4-4
Bracket, field glasses:		
Installation	11-65b	11-125
Removal	11-65a	11-125
Bracket, fire extinguisher:		
Inspection	10-53b	10-88
Installation	10-53c	10-88
Removal	10-53a	10-88
Bracket, fuel injection lines, left:		
Installation	3-41b	3-80
Removal	3-41a	3-80
Bracket, fuel injection lines, right:		
Installation	3-40b	3-79
Removal	3-40a	3-79

INDEX (Cont'd)

	Para.	Page
B (Cont'd)		
Bracket, headphone mounting:		
Installation	12-19b	12-34
Removal	12-19a	12-34
Bracket, hood latch:		
Installation	10-6b	10-10
Removal	10-6a	10-9
Bracket, hood prop rod and:		
Assembly	10-8d	10-12
Disassembly	10-8b	10-12
Inspection	10-8c	10-12
Installation	10-8e	10-13
Removal	10-8a	10-12
Bracket, horn mounting:		
Installation	4-27b	4-50
Removal	4-27a	4-50
Bracket, muffler support:		
Assembly	3-55c	3-100
Disassembly	3-55b	3-100
Installation	3-55d	3-100
Removal	3-55a	3-100
Bracket, Precision Lightweight Global Positioning Receiver (PLGR) mounting:		
Installation	12-17.1b	12-30.2
Removal	12-17.1a	12-30.2
Bracket, radiator front mount:		
Installation	9-5b	9-5
Removal	9-5a	9-5
Bracket, rear antenna mounting:		
Installation	12-22b	12-38
Removal	12-22a	12-38
Bracket, rear bumper inner mounting:		
Installation	9-8b	9-10
Removal	9-8a	9-10
Bracket, shelter mounting:		
Installation	11-73b	11-134
Removal	11-73a	11-134
Brackets, cargo bulkhead mounting:		
Installation	10-51b	10-86
Removal	10-51a	10-86
Brackets, intercom and:		
Installation	11-63b	11-122
Removal	11-63a	11-122
Brackets, M13 decontamination:		
Installation	10-58	10-98
Brackets, radio rack and mounting:		
Installation	12-17b	12-30
Removal	12-17a	12-28
Brackets, tailgate chain and:		
Installation	10-35b	10-62
Removal	10-35a	10-61

	Para.	Page
B (Cont'd)		
Brackets, 10,500 lb hydraulic winch and (M1113):		
Brackets installation	12-27.1c	12-54.4
Brackets removal	12-27.1b	12-54.4
Winch installation	12-27.1d	12-54.4
Winch removal	12-27.1a	12-54.2
Brackets, 10,500 lb rear hydraulic winch and (M1114):		
Brackets installation	12-36.1c	12-68.2
Brackets removal	12-36.1b	12-68.2
Winch installation	12-36.1d	12-68.2
Winch removal	12-36.1a	12-68.1
Brake adjustment, rear dual service/parking	7-19	7-54
Brake and base, turret:		
Adjustment	11-55c	11-108
Installation	11-55b	11-108
Removal	11-55a	11-108
Brake cable/mounting bracket, parking, left:		
Installation	7-17b	7-50
Removal	7-17a	7-48
Brake cable, parking, right:		
Installation	7-16b	7-46
Removal	7-16a	7-46
Brake caliper, disc:		
Assembly	22-4d	22-6
Cleaning	22-4b	22-4
Disassembly	22-4a	22-4
Inspection	22-4c	22-5
Brake caliper, rear parking:		
Assembly	22-5d	22-10
Cleaning	22-5b	22-9
Disassembly	22-5a	22-8
Inspection	22-5c	22-9
Brake caliper, service:		
Cleaning and inspection	7-4b	7-12
Installation	7-4c	7-12
Removal	7-4a	7-10
Brake lever, parking:		
Installation	7-20b	7-56
Removal	7-20a	7-56
Brake lines:		
Caliper-to-intermediate support bracket installation	7-7f	7-22
Caliper-to-intermediate support bracket removal	7-7e	7-22
Front caliper-to-intermediate brake line installation	7-7b	7-18
Front caliper-to-intermediate brake line removal	7-7a	7-18
Intermediate brake line installation	7-7j	7-25
Intermediate brake line removal	7-7i	7-24

INDEX (Cont'd)

	Para.	Page
B (Cont'd)		
Pressure limiter valve-to-differential valve installation	7-7n	7-26
Pressure limiter valve-to-differential valve removal	7-7m	7-26
Proportioning valve-to-union brake line installation	7-7l	7-26
Proportioning valve-to-union brake line removal	7-7k	7-26
Rear brake line installation	7-7h	7-24
Rear brake line removal	7-7g	7-24
Rear caliper-to-intermediate brake line installation	7-7d	7-20
Rear caliper-to-intermediate brake line removal	7-7c	7-20
Brake pad, rear dual service/parking:		
Cleaning and inspection	7-14b	7-40
Installation	7-14c	7-40
Removal	7-14a	7-38
Brake pad, service:		
Cleaning and inspection	7-3b	7-8
Installation	7-3c	7-8
Removal	7-3a	7-6
Brake pedal, service:		
Installation	7-9b	7-30
Removal	7-9a	7-30
Brake pressure limiter valve:		
Installation	7-8b	7-28
Removal	7-8a	7-28
Brake protection guards:		
Installation	7-11b	7-34
Removal	7-11a	7-34
Brake rod, rear dual service/parking:		
Installation	7-18b	7-52
Removal	7-18a	7-52
Brake rotor:		
Checking lateral runout	22-3b	22-2
Checking thickness variation	22-3c	22-2
Inspection	22-3a	22-2
Refinishing	22-3d	22-2
Brake rotor, service:		
Installation	7-12b	7-36
Removal	7-12a	7-36
Brake, service/parking, system operation	1-25	1-32
Brake, service, system operation	1-26	1-33
Brake switch, parking		
Installation	4-23b	4-46
Removal	4-23a	4-46
Brake system bleeding, service:		
Manual bleeding	7-2b	7-4
Master cylinder bleeding	7-2c	7-4
Pressure bleeding	7-2a	7-2
B (Cont'd)		
Brake system, rear dual service/parking maintenance task summary	7-13	7-37
Brake system, service maintenance task summary	7-1	7-1
Brake system tests	2-41	2-419
Brake warning lamp:		
Installation	4-21b	4-44
Removal	4-21a	4-44
Break-in procedure	1-9	1-2
Brushguard bracket:		
Installation	12-36.7c	12-68.30
Removal	12-36.7b	12-68.30
Brushguard:		
Installation	12-36.7d	12-68.30
Removal	12-36.7a	12-68.30
Brush, horn control:		
Installation	4-25b	4-48
Removal	4-25a	4-48
Bulkhead, cargo:		
Installation	10-49b	10-83
Removal	10-49a	10-83
Bulkhead extension, cargo:		
Assembly	10-50c	10-84
Disassembly	10-50b	10-84
Installation	10-50d	10-84
Removal	10-50a	10-84
Bumper and bracket, night vision lid:		
Installation	11-58b	11-112
Removal	11-58a	11-112
Bumper and towing brackets, front:		
Installation	9-2b	9-2
Removal	9-2a	9-2
Bumper brace, rear:		
Installation	9-6b	9-6
Removal	9-6a	9-6
Bumper inner mounting bracket, rear:		
Installation	9-8b	9-10
Removal	9-8a	9-10
Bumper, rear:		
Installation	9-7b	9-8
Removal	9-7a	9-8
Bushing, control arm:		
Installation	21-7b	21-18
Removal	21-7a	21-18
Buss bar:		
Installation	4-71b	4-121
Removal	4-71a	4-121

INDEX (Cont'd)

	Para.	Page
C		
Cable, 12-volt regulator		
Installation	4-70b	4-120
Removal	4-70a	4-118
Cable, 200-ampere dual voltage alternator:		
Installation	4-6b	4-12
Removal	4-6a	4-12
Cable, 200-ampere dual voltage umbilical power:		
Installation	4-7b	4-16
Removal	4-7a	4-14
Cable, 400-amp dual voltage alternator:		
Installation	4-8.2b	4-18.8
Removal	4-8.2a	4-18.4
Cable, battery:		
Cleaning and inspection	4-68a	4-110
Ground cable installation	4-68e	4-112
Ground cable removal	4-68d	4-112
Ground cables disconnection	4-68b	4-111
Ground cables reconnection	4-68c	4-111
Interconnecting cable installation	4-68g	4-113
Interconnecting cable removal	4-68f	4-113
Positive cable installation	4-68i	4-114
Positive cable removal	4-68h	4-114
Cable, hand throttle control, and bracket:		
Installation	3-46b	3-88
Removal	3-46a	3-88
Cable, heater control, and shutoff valve:		
Adjustment	10-79	10-136
Cable, parking brake, right:		
Installation	7-16b	7-46
Removal	7-16a	7-46
Cable, power:		
Installation	12-25b	12-48
Removal	12-25a	12-47
Cable, slave receptacle and:		
Inspection	4-76b	4-132
Installation	4-76c	4-132
Removal	4-76a	4-132
Cable, speedometer:		
Installation	4-18b	4-38
Removal	4-18a	4-38
Cables, rear antenna:		
Installation	12-24b	12-43
Removal	12-24a	12-40
Cables, starter power:		
Installation	4-72b	4-124
Removal	4-72a	4-122

	Para.	Page
C (Cont'd)		
Cable, transfer case guide:		
Installation	20-4b	20-8
Removal	20-4a	20-8
Cable, winch:		
Installation	12-28b	12-56
Removal	12-28a	12-56
Cable, 10,500 lb hydraulic winch (M1113):		
Installation	12-28.1b	12-56.2
Removal	12-28.1a	12-56.2
Cable, 10,500 lb rear hydraulic winch (M1114):		
Installation	12-36.2b	12.68.4
Removal	12.36.2a	12-68.4
Caliper, rear dual service/parking brake:		
Cleaning and inspection	7-15b	7-44
Installation	7-15c	7-44
Removal	7-15a	7-42
Caliper, service brake:		
Cleaning and inspection	7-4b	7-12
Installation	7-4c	7-12
Removal	7-4a	7-10
Camouflage screen stowage straps:		
Installation	10-36b	10-63
Removal	10-36a	10-63
Can tray, water:		
Installation	11-70b	11-131
Removal	11-70a	11-131
Capacitor, Transmission Control Module (TCM):		
Installation	4-47.1b	4-80
Removal	4-47.1a	4-80
Cargo bulkhead:		
Installation	10-49b	10-83
Removal	10-49a	10-83
Cargo bulkhead extension:		
Assembly	10-50c	10-84
Disassembly	10-50b	10-84
Installation	10-50d	10-84
Removal	10-50a	10-84
Cargo bulkhead mounting brackets:		
Installation	10-51b	10-86
Removal	10-51a	10-86
Cargo door access, rear:		
Lifting	11-90a	11-160
Lowering	11-90b	11-160
Cargo floor access cover:		
Installation	10-58.3	10-98.20

INDEX (Cont'd)

	Para.	Page
C (Cont'd)		
Cargo shell:		
Inspection	25-7b	25-19
Installation	25-7c	25-19
Repair	25-8	25-22
Removal	25-7a	25-16
Cargo shell door:		
Adjustment	11-14c	11-30
Inspection	11-14a.1	11-26
Installation	11-14b	11-28
Removal	11-14a	11-26
Seal cleaning	11-14d	11-30
Cargo shell door armor:		
Inspection	11-13b	11-25
Installation	11-13c	11-25
Removal	11-13a	11-25
Cargo shell door dovetail assembly:		
Adjustment	11-20c	11-38
Installation	11-20b	11-38
Removal	11-20a	11-38
Cargo shell door dovetail spring:		
Installation	11-28b	11-51
Removal	11-28a	11-51
Cargo shell door front striker:		
Installation	11-25b	11-48
Removal	11-25a	11-48
Cargo shell door gas spring:		
Assembly	11-22d	11-44
Disassembly	11-22c	11-44
Inspection	11-22c.1	11-44
Installation	11-22e	11-44
Removal	11-22b	11-43
Rotating	11-22a	11-41
Cargo shell door left side gas spring mounting bracket:		
Inspection	11-29b	11-52
Installation	11-29c	11-52
Removal	11-29a	11-52
Cargo shell door grab handle:		
Installation	11-16b	11-33
Removal	11-16a	11-33
Cargo shell door handle latch:		
Installation	11-17b	11-34
Removal	11-17a	11-34
Cargo shell door latch:		
Adjustment	11-18c	11-35
Installation	11-18b	11-35
Removal	11-18a	11-35
Cargo shell door latch rod:		
Adjustment	11-19c	11-36
Installation	11-19b	11-36
Removal	11-19a	11-36

	Para.	Page
C (Cont'd)		
Cargo shell door liner:		
Installation	11-31b	11-56
Removal	11-31a	11-56
Cargo shell door rear striker:		
Installation	11-26b	11-49
Removal	11-26a	11-49
Cargo shell door rear striker mounting plate:		
Installation	11-27b	11-50
Removal	11-27a	11-50
Cargo shell door retention cable:		
Inspection	11-21a.1	11-40
Installation	11-21b	11-40
Removal	11-21a	11-40
Cargo shell door seal:		
Installation	11-24b	11-47
Removal	11-24a	11-47
Cargo shell door strap:		
Inspection	11-23a.1	11-46
Installation	11-23b	11-46
Removal	11-23a	11-46
Cargo shell door wire handle lock:		
Installation	11-15b	11-32
Removal	11-15a	11-32
Cargo tiedown:		
Installation	10-52b	10-87
Removal	10-52a	10-87
Catalytic converter, muffler and:		
Installation	3-49b	3-92
Removal	3-49a	3-92
Catch, battery box cover:		
Installation	10-42b	10-72
Removal	10-42a	10-72
Catch, fuel door:		
Installation	10-4b	10-6
Removal	10-4a	10-6
CDR valve and bracket:		
Cleaning and inspection	3-9c	3-18
Installation	3-9d	3-18
Removal	3-9b	3-16
Testing	3-9a	3-16
CDR valve hoses:		
Installation	3-10b	3-20
Removal	3-10a	3-20
CDR valve vent line:		
Installation	12-44b	12-79
Removal	12-44a	12-79
Center hood stop:		
Installation	10-12b	10-21
Removal	10-12a	10-21

INDEX (Cont'd)

	Para.	Page
C (Cont'd)		
Center hood stop guide:		
Installation	10-14b	10-23
Removal	10-14a	10-23
Center link:		
Installation	8-15b	8-42
Removal	8-15a	8-42
Center support:		
Assembly	28-9d	28-35
Cleaning	28-9b	28-32
Disassembly	28-9a	28-32
Inspection	28-9c	28-32
Chain, shelter carrier tailgate:		
Assembly	11-77c	11-138
Disassembly	11-77b	11-138
Installation	11-77d	11-138
Removal	11-77a	11-138
Characteristics, capabilities, and features, equipment	1-10	1-2
Circuit breaker:		
Installation	4-12b	4-26
Removal	4-12a	4-26
Circuit breaker, windshield de-icer, defroster switch, and:		
Installation	10-67b	10-114
Removal	10-67a	10-114
Circuit breakers, transmission:		
Installation	4-43b	4-70
Removal	4-43a	4-70
Clamp, battery cable terminal:		
Installation	4-67b	4-108
Removal	4-67a	4-108
Cleaning:		
General maintenance	2-14	2-30
Close-off and retainer, intermediate steering shaft:		
Installation	8-22b	8-62
Removal	8-22a	8-62
Coil spring:		
Installation	6-27b	6-61
Removal	6-27a	6-60
Cold-advance solenoid, fuel injection pump:		
Inspection	16-9b	16-18
Installation	16-9c	16-18
Removal	16-9a	16-18
Cold-advance switch:		
Installation	4-31b	4-55
Removal	4-31a	4-55
C (Cont'd)		
Column, steering:		
Installation	8-18b	8-52
Removal	8-18a	8-50
Commander's control box mounting bracket:		
Installation	11-64b	11-124
Removal	11-64a	11-124
Common tools and equipment	2-1	2-1
Communication kits maintenance task summary	12-16	12-27
Companion seat assembly:		
Assembly	10-44b	10-74
Disassembly	10-44a	10-74
Companion seat assembly and battery box cover:		
Installation	10-43b	10-73
Removal	10-43a	10-73
Composite light assembly, front:		
Installation	4-53b	4-90
Removal	4-53a	4-90
Composite light assembly, rear:		
Installation	4-57b	4-96
Removal	4-57a	4-96
Composite light lamp, front:		
Installation	4-54b	4-92
Removal	4-54a	4-92
Composite light lamp, rear:		
Installation	4-55b	4-93
Removal	4-55a	4-93
Compression/mechanical tests	2-30	2-147
Condenser fan access panel:		
Inspection	11-86b	11-154
Installation	11-86c	11-154
Removal	11-86a	11-154
Condenser fan exhaust and supply vent:		
Exhaust vents installation	11-85d	11-152
Exhaust vents removal	11-85a	11-152
Inspection	11-85c	11-152
Supply vents installation	11-85e	11-152
Supply vents removal	11-85b	11-152
Connecting rod, locking pawl and:		
Installation	11-7b	11-14
Removal	11-7a	11-14
Connector and grommet, service headlight and blackout drive light electrical:		
Installation	4-65b	4-106
Removal	4-65a	4-106

INDEX (Cont'd)

	Para.	Page
C (Cont'd)		
Connector, wiring harness:		
Connector assembly repair	4-80d	4-147
Female cable connector repair	4-80c	4-147
Male cable connector repair	4-80b	4-146
Protective control box lower cannon plug assembly repair	4-80f	4-148
Receptacle assembly repair	4-80e	4-148
Terminal-type cable connector repair	4-80a	4-146
Control arm bracket, rear upper:		
Installation	24-11b	24-14
Removal	24-11a	24-14
Control arm bushing:		
Installation	21-7b	21-18
Removal	21-7a	21-18
Control arm, lower:		
Installation	6-26b	6-58
Removal	6-26a	6-58
Control arm, upper:		
Installation	6-25b	6-56
Removal	6-25a	6-56
Control box, protective:		
Installation	4-4b	4-6
Removal	4-4a	4-6
Controller, glow plug:		
Installation	4-33b	4-58
Removal	4-33a	4-58
Controller plug, 10,500 lb hydraulic winch (M1113):		
Installation	12-32.1b	12-62.5
Removal	12-32.1a	12-62
Controller plug, 10,500 lb rear hydraulic winch (M1114):		
Installation	12-36.6b	12-36.28
Removal	12-36.6a	12-36.26
Control valve and accumulator housing repair:		
Accumulator housing assembly	28-17h	28-64
Accumulator housing cleaning	28-17a	28-60
Accumulator housing disassembly	28-17b	28-60
Accumulator housing inspection	28-17g	28-64
Control valve assembly	28-17f	28-62
Control valve cleaning	28-17d	28-62
Control valve disassembly	28-17c	28-62
Control valve inspection	28-17e	28-62
Control valve, power steering system hydraulic:		
Back flush procedure	8-25b	8-68
Inspection	8-25d	8-70
Installation	8-25e	8-70
Removal	8-25a	8-68
C (Cont'd)		
Converter housing cover (2-piece), sealed lower:		
Inspection	5-11b	5-26
Installation	5-11c	5-26
Removal	5-11a	5-26
Converter housing cover, sealed upper:		
Inspection	5-12b	5-28
Installation	5-12c	5-28
Removal	5-12a	5-28
Converter, torque:		
Cleaning	28-4a	28-20
Inspection	28-4b	28-20
Cooler hose, power steering:		
Installation	8-26b	8-72
Removal	8-26a	8-72
Cooler lines, differential (serial numbers 188974 and below):		
Front hoses and relief valve installation	3-84d	3-165
Front hoses and relief valve removal	3-84a	3-148
Oil cooler hoses and tubes installation	3-84c	3-159
Oil cooler hoses and tubes removal	3-84b	3-153
Cooler lines, differential (serial numbers 188975 and above):		
Drilling hole locations in tunnel support braces	3-85c	3-177
Front hoses and relief valve installation	3-85f	3-185
Front hoses and relief valve removal	3-85a	3-170
Oil cooler tubes installation	3-85e	3-183
Oil cooler tubes removal	3-85b	3-175
Rear oil cooler hoses and tubes installation	3-85d	3-179
Cooler lines, differential rear (serial numbers 188975 and above)		
Rear lines installation	30-4b	30-28
Rear lines removal	30-4a	30-26
Cooling system:		
Maintenance task summary (DS)	17-2	17-1
Maintenance task summary (unit)	3-60	3-109
Cooling system operation	1-20	1-26
Cooling system servicing:		
Depressurizing	3-61a	3-110
Draining system	3-61b	3-110
Filling system	3-61d	3-110
Preventive cleaning	3-61c	3-110

INDEX (Cont'd)

	Para.	Page
C (Cont'd)		
Cooling system tests	2-25	2-61
Cover, differential:		
Cleaning and inspection	6-18b	6-46
Installation	6-18c	6-47
Removal	6-18a	6-46
Cover, door latch:		
Installation	11-6b	11-13
Removal	11-6a	11-13
Cover, engine access:		
Assembly	10-22c	10-36
Disassembly	10-22b	10-36
Installation	10-22d	10-36
Removal	10-22a	10-35
Cover, geared hub side:		
Cleaning and inspection	6-8b	6-20
Installation	6-8c	6-20
Removal	6-8a	6-20
Covers, A/C coolant line:		
Inspection	25-32b	25-84
Installation	25-32c	25-86
Removal	25-32a	25-84
Cowl armor:		
Inspection	11-49b	11-98
Installation	11-49c	11-98
Removal	11-49a	11-98
Cowl insulation, left front:		
Inspection	10-31b	10-56
Installation	10-31c	10-56
Removal	10-31a	10-56
Cowl insulation, left outer:		
Installation	10-30b	10-55
Removal	10-30a	10-55
Cowl insulation, right front:		
Inspection	10-32b	10-58
Installation	10-32c	10-58
Removal	10-32a	10-58
C-pillar bottom left side armor:		
Inspection	11-46a.1	11-94
Installation	11-46b	11-94
Removal	11-46a	11-94
C-pillar door, guides, track, and door stop:		
Inspection	25-12b	25-32
Installation	25-12c	25-34
Removal	25-12a	25-32
C-pillar partition:		
Assembly	25-9c	25-26
Disassembly	25-9b	25-24
Inspection	25-9b.1	25-26
Installation	25-9d	25-26
Removal	25-9a	25-24
C-pillar top armor:		
Inspection	11-45b	11-92
Installation	11-45c	11-92
Removal	11-45a	11-92

	Para.	Page
C (Cont'd)		
Crankcase Depression Regulator (CDR) valve and bracket:		
Cleaning and inspection	3-9c	3-18
Installation	3-9d	3-18
Removal	3-9b	3-16
Testing	3-9a	3-16
Crankshaft pulley:		
Installation	15-6b	15-14
Removal	15-6a	15-14
Crossmember bracket, rear, and rear body mount bracket:		
Installation	24-21b	24-38
Removal	24-21a	24-38
Crossmember, front, rear suspension:		
Installation	24-18b	24-32
Removal	24-18a	24-30
Crossmember, rear, rear suspension:		
Installation	24-19b	24-34
Removal	24-19a	24-34
Crossmember, suspension:		
Inspection	24-20a	24-36
Repair	24-20b	24-36
Crossmember, transmission mount:		
Installation	9-10b	9-16
Removal	9-10a	9-16
Crossover, intake:		
Installation	15-20b	15-37
Removal	15-20a	15-37
Crossover, water:		
Inspection	3-79b	3-138
Installation	3-79c	3-138
Removal	3-79a	3-138
Cylinder head, left:		
Installation	15-4c	15-10
Removal	15-4a	15-8
Repair	15-4b	15-8
Cylinder head, right:		
Installation	15-5c	15-12
Removal	15-5a	15-12
Repair	15-5b	15-12
D		
Damper, torsional:		
Installation	15-7b	15-16
Removal	15-7a	15-15
Data, tabulated	1-15	1-19
DCA troubleshooting	2-45	2-479
Decontamination brackets (M13):		
Installation	10-58	10-98

INDEX (Cont'd)

	Para.	Page
D (Cont'd)		
Deep water fording kit exhaust assembly:		
Inspection	12-38b	12-70
Installation	12-38c	12-70
Removal	12-38a	12-70
Deep water fording kit maintenance task summary	12-37	12-69
Deep water fording sensor cup:		
Installation	12-46b	12-81
Removal	12-46a	12-81
Defrost control:		
Installation	10-77b	10-132
Removal	10-77a	10-132
Defroster ducting:		
Installation	10-82b	10-142
Removal	10-82a	10-142
Defroster nozzle, left:		
Installation	10-83b	10-144
Removal	10-83a	10-144
Defroster nozzle, right:		
Installation	10-84b	10-146
Removal	10-84a	10-146
Defroster switch, and circuit breaker, windshield de-icer:		
Installation	10-67b	10-114
Removal	10-67a	10-114
Destruction of Army equipment to prevent enemy use	1-3	1-1
Differences between models	1-14	1-18
Differential:		
Assembly	30-3d	30-11
Cleaning	30-3b	30-9
Disassembly	30-3a	30-2
Inspection	30-3c	30-9
Installation	21-5b	21-8
Removal	21-5a	21-6
Differential and axle free play tolerance inspection	21-9	21-20
Differential cooler lines (serial numbers 188974 and below):		
Front hoses and relief valve installation	3-84d	3-165
Front hoses and relief valve removal	3-84a	3-148
Oil cooler hoses and tubes installation	3-84c	3-159
Oil cooler hoses and tubes removal	3-84b	3-153
D (Cont'd)		
Differential cooler lines (serial numbers 188975 and above):		
Drilling hole locations in tunnel support braces	3-85c	3-177
Front hoses and relief valve installation	3-85f	3-185
Front hoses and relief valve removal	3-85a	3-170
Oil cooler tubes installation	3-85e	3-183
Oil cooler tubes removal	3-85b	3-175
Rear oil cooler hoses and tubes installation	3-85d	3-179
Differential cover:		
Cleaning and inspection	6-18b	6-46
Installation	6-18c	6-47
Removal	6-18a	6-46
Differential, front alignment	21-5.1	21-8.2
Differential output shaft seal:		
Installation	21-3b	21-2
Removal	21-3a	21-2
Differential rear cooler lines (serial numbers 188975 and above)		
Rear lines installation	30-4b	30-28
Rear lines removal	30-4a	30-26
Differential repair task summary (GS)	30-2	30-1
Differential support bracket and side mounting bracket:		
Installation	24-15b	24-22
Removal	24-15a	24-20
Differential valve, proportioning valve and:		
Differential valve installation	7-10b	7-32
Differential valve removal	7-10a	7-32
Proportioning valve installation	7-10d	7-33
Proportioning valve removal	7-10c	7-32
Differential vent line:		
Installation	6-14b	6-39
Removal	6-14a	6-39
Dipstick tube, engine oil:		
Installation	3-2b	3-2
Removal	3-2a	3-2
Dipstick tube, transmission oil:		
Installation	5-5b	5-14
Removal	5-5a	5-14
Direct clutch assembly:		
Assembly	28-10d	28-40
Cleaning	28-10b	28-38
Direct clutch piston movement measurement	28-10e	28-40
Disassembly	28-10a	28-38
Inspection	28-10c	28-38

INDEX (Cont'd)

	Para.	Page
D (Cont'd)		
Directional signal control:		
Installation	4-63b	4-104
Removal	4-63a	4-104
Directional signal control cancelling ring:		
Installation	4-64b	4-105
Removal	4-64a	4-105
Directional signal control indicator lamp:		
Installation	4-62b	4-103
Removal	4-62a	4-103
Directional signal flasher:		
Installation	4-61b	4-102
Removal	4-61a	4-102
Disc brake caliper:		
Assembly	22-4d	22-6
Cleaning	22-4b	22-4
Disassembly	22-4a	22-4
Inspection	22-4c	22-5
Diverter box:		
Assembly	10-81c	10-140
Disassembly	10-81b	10-140
Installation	10-81d	10-140
Removal	10-81a	10-140
Diverter box cover:		
Installation	10-89b	10-151
Removal	10-89a	10-151
Diverter ducting:		
Installation	10-86b	10-148
Removal	10-86a	10-148
Diverter manifold and housing:		
Installation	10-95b	10-160
Removal	10-95a	10-159
Door and hinge, front:		
Installation	11-2b	11-4
Removal	11-2a	11-4
Door and hinge, rear:		
Installation	11-2.1b	11-4.2
Removal	11-2.1a	11-4.2
Door armor, cargo shell:		
Inspection	11-13b	11-25
Installation	11-13c	11-25
Removal	11-13a	11-25
Door, cargo shell:		
Adjustment	11-14c	11-30
Inspection	11-14a.1	11-26
Installation	11-14b	11-28
Removal	11-14a	11-26
Seal cleaning	11-14d	11-30
Door dovetail assembly, cargo shell:		
Adjustment	11-20c	11-38
Installation	11-20b	11-38
Removal	11-20a	11-38
D (Cont'd)		
Door dovetail spring, cargo shell:		
Installation	11-28b	11-51
Removal	11-28a	11-51
Door, fixed rear:		
Installation	10-20b	10-33
Removal	10-20a	10-33
Door front striker, cargo shell:		
Installation	11-25b	11-48
Removal	11-25a	11-48
Door, fuel:		
Installation	10-3b	10-5
Removal	10-3a	10-5
Door gas spring, cargo shell:		
Assembly	11-22d	11-44
Disassembly	11-22c	11-44
Inspection	11-22c.1	11-44
Installation	11-22e	11-44
Removal	11-22b	11-43
Rotating	11-22a	11-41
Door left side gas spring mounting bracket, cargo shell:		
Inspection	11-29b	11-52
Installation	11-29c	11-52
Removal	11-29a	11-52
Door grab handle, cargo shell:		
Installation	11-16b	11-33
Removal	11-16a	11-33
Door handle:		
Installation	11-5b	11-12
Removal	11-5a	11-12
Door handle (with locking feature):		
Installation	11-5.1b	11-12.2
Removal	11-5.1a	11-12.2
Door handle assembly:		
Installation	10-19c	10-32
Removal	10-19a	10-30
Repair	10-19b	10-30
Door handle latch, cargo shell:		
Installation	11-17b	11-34
Removal	11-17a	11-34
Door hinge, soft top:		
Installation	10-91b	10-153
Removal	10-91a	10-153
Door latch:		
Inspection	11-4b	11-10
Installation	11-4c	11-10
Removal	11-4a	11-10
Door latch adjustment:		
Exterior handle adjustment	11-9a	11-18
Interior handle adjustment	11-9b	11-18
Locking rod adjustment	11-9c	11-18

INDEX (Cont'd)

	Para.	Page
D (Cont'd)		
Door latch, cargo shell:		
Adjustment	11-18c	11-35
Installation	11-18b	11-35
Removal	11-18a	11-35
Door latch cover:		
Installation	11-6b	11-13
Removal	11-6a	11-13
Door latch rod, cargo shell:		
Adjustment	11-19c	11-36
Installation	11-19b	11-36
Removal	11-19a	11-36
Door liner, cargo shell:		
Installation	11-31b	11-56
Removal	11-31a	11-56
Door rear striker, cargo shell:		
Installation	11-26b	11-49
Removal	11-26a	11-49
Door rear striker mounting plate, cargo shell:		
Installation	11-27b	11-50
Removal	11-27a	11-50
Door release handle, locking rod and:		
Installation	11-8b	11-16
Removal	11-8a	11-16
Door retention cable, cargo shell:		
Inspection	11-21a.1	11-40
Installation	11-21b	11-40
Removal	11-21a	11-40
Door, right rear striker reinforcement:		
Installation	11-12.1b	11-24.2
Removal	11-12.1a	11-24.2
Door seal and pull strap:		
Door pull strap installation	11-11d	11-22
Door pull strap removal	11-11c	11-22
Door seal installation	11-11b	11-22
Door seal removal	11-11a	11-22
Door seal, cargo shell:		
Installation	11-24b	11-47
Removal	11-24a	11-47
Door, soft top, adjustment	10-92	10-154
Door strap, cargo shell:		
Inspection	11-23a.1	11-46
Installation	11-23b	11-46
Removal	11-23a	11-46
Door striker:		
Installation	11-12b	11-24
Removal	11-12a	11-24
Door striker, soft top:		
Installation	10-94b	10-158
Removal	10-94a	10-158

	Para.	Page
D (Cont'd)		
Door, turret:		
Installation	11-53b	11-104
Removal	11-53a	11-104
Door window:		
Installation	11-3b	11-8
Removal	11-3a	11-6
Door window seal:		
Installation	11-10b	11-20
Removal	11-10a	11-20
Door wire handle lock, cargo shell:		
Installation	11-15b	11-32
Removal	11-15a	11-32
Double ammo box tray (caliber .50):		
Inspection	11-68a.1	11-129
Installation	11-68b	11-129
Removal	11-68a	11-129
Drainage bracket:		
Installation	3-22b	3-38
Removal	3-22a	3-38
Drivebelt, serpentine (serial numbers 196900 and below):		
Alignment	3-81c	3-142.2
Installation	3-81b	3-142
Removal	3-81a	3-142
Drivebelt, serpentine (serial numbers 196901 and above):		
Alignment	3-81.1c	3-142.6
Installation	3-81.1b	3-142.4
Removal	3-81.1a	3-142.4
Driven gear, speedometer:		
Installation	5-17b	5-34
Removal	5-17a	5-34
Drive, oil pump:		
Installation	15-14b	15-29
Removal	15-14a	15-29
Driver's footwell inner armor:		
Inspection	11-41b	11-84
Installation	11-41c	11-84
Removal	11-41a	11-84
Driver's footwell outer armor:		
Inspection	11-40b	11-82
Installation	11-40c	11-82
Removal	11-40a	11-82
Driver's rearview mirror bracket:		
Inspection	10-69a.1	10-120
Installation	10-69b	10-120
Removal	10-69a	10-120
Driver's seat assembly:		
Assembly	10-41b	10-70
Disassembly	10-41a	10-70
Installation	10-40b	10-69
Removal	10-40a	10-69

INDEX (Cont'd)

	Para.	Page
D (Cont'd)		
Drive sprockets, timing chain cover, timing chain, and:		
Inspection	15-10b	15-21
Installation	15-10c	15-22
Removal	15-10a	15-20
Drivetrain operation	1-18	1-24
Drivetrain tests	2-43	2-453
Ducting, defroster:		
Installation	10-82b	10-142
Removal	10-82a	10-142
Ducting, heater:		
Installation	10-80b	10-138
Removal	10-80a	10-138
Dust unloader, air cleaner assembly and:		
Inspection	3-12b	3-22
Installation	3-12c	3-22
Removal	3-12a	3-22
E		
Electrical circuit description	2-22	2-43
Electrical gauge:		
Installation	4-16b	4-34
Removal	4-16a	4-34
Electrical/mechanical systems troubleshooting	2-19	2-35
Electrical system maintenance task summary	18-2	18-1
Electrical tests	2-27	2-75
Element, air cleaner filter:		
Cleaning	3-13d	3-26
Emergency cleaning	3-13c	3-24
Inspection	3-13b	3-24
Installation	3-13e	3-26
Removal	3-13a	3-24
Element, fuel filter:		
Cleaning and inspection	3-34b	3-66
Element installation	3-34c	3-67
Element removal	3-34a	3-66
Engine/crew compartment heater assembly:		
Installation	12-10b	12-18
Removal	12-10a	12-18
Engine/crew compartment heater circuit breaker:		
Installation	12-12b	12-22
Removal	12-12a	12-22
Engine/crew compartment heater controller:		
Installation	12-13b	12-23
Removal	12-13a	12-23
E (Cont'd)		
Engine/crew compartment heater exhaust muffler:		
Installation	12-3b	12-2.2
Removal	12-3a	12-2.2
Engine/crew compartment heater exhaust pipe:		
Installation	12-4b	12-3
Removal	12-4a	12-3
Engine/crew compartment heater fuel lines:		
Heater fuel line installation	12-8b	12-12
Heater fuel line removal	12-8a	12-12
Tank fuel line and supply tube installation	12-8d	12-14
Tank fuel line and supply tube removal	12-8c	12-14
Engine/crew compartment heater fuel pump:		
Installation	12-9b	12-16
Removal	12-9a	12-16
Engine/crew compartment heater fuel system bleeding	12-14	12-24
Engine/crew compartment heater wiring harness:		
Installation	12-11b	12-20
Removal	12-11a	12-20
Engine/crew compartment heater heat shield:		
Installation	12-2b	12-2
Removal	12-2a	12-2
Engine/crew compartment heater inlet pipe:		
Installation	12-4.1b	12-4
Removal	12-4.1a	12-4
Engine/crew compartment heater maintenance task summary	12-1	12-1
Engine/crew compartment heater outlet hose assembly:		
Installation	12-6b	12-8
Removal	12-6a	12-8
Engine/crew compartment heater circulating pump:		
Installation	12-7b	12-10
Removal	12-7a	12-10
Engine/crew compartment heater lower hose assembly:		
Installation	12-5b	12-6
Removal	12-5a	12-6
Engine access cover:		
Assembly	10-22c	10-36
Disassembly	10-22b	10-36
Installation	10-22d	10-36
Removal	10-22a	10-35

INDEX (Cont'd)

	Para.	Page
E (Cont'd)		
Engine access cover flexible latch and holddown strike:		
Installation	10-21b	10-34
Removal	10-21a	10-34
Engine cooling tests	2-31	2-159
Engine idle speed adjustment	3-45	3-87
Engine injection pump timing:		
Timing adjustment	15-23b	15-45
Timing check	15-23a	15-42
Engine installation	15-28	15-98
Engine left splash shield:		
Assembly	10-23c	10-40
Disassembly	10-23b	10-40
Installation	10-23d	10-41
Removal	10-23a	10-38
Engine left splash shield access cover:		
Installation	10-25b	10-46
Removal	10-25a	10-46
Engine lubrication tests	2-32	2-191
Engine maintenance task summary, general	15-2	15-1
Engine mount and insulator:		
Assembly	15-3c	15-4
Disassembly	15-3b	15-4
Installation	15-3d	15-6
Removal	15-3a	15-2
Engine mount bracket, left:		
Installation	24-10b	24-12
Removal	24-10a	24-12
Engine mount bracket, right:		
Installation	24-9b	24-10
Removal	24-9a	24-10
Engine oil cooler supply and return lines:		
Inspection	3-7b	3-10
Supply line installation	3-7c	3-10
Supply line removal	3-7a	3-10
Engine oil dipstick tube:		
Installation	3-2b	3-2
Removal	3-2a	3-2
Engine oil filler tube:		
Inspection	3-3b	3-4
Installation	3-3c	3-4
Removal	3-3a	3-4
Engine oil filter adapter:		
Inspection	3-4b	3-5
Installation	3-4c	3-5
Removal	3-4a	3-5
Engine oil service:		
Filter installation	3-5c	3-6
Filter removal	3-5b	3-6
Oil draining	3-5a	3-6
Oil replenishing	3-5d	3-6

	Para.	Page
E (Cont'd)		
Engine preparation:		
Assembly	15-27b	15-88
Disassembly	15-27a	15-78
Engine removal	15-26	15-48
Engine replacement in shipping/storage container:		
Installation	15-29b	15-126
Removal	15-29a	15-126
Engine replacement task summary	15-25	15-47
Engine right splash shield:		
Assembly	10-24c	10-44
Disassembly	10-24b	10-42
Installation	10-24d	10-44
Removal	10-24a	10-42
Engine rpm sensor:		
Installation	4-37b	4-64
Removal	4-37a	4-64
Engine run-in:		
In-chassis run-in	15-24	15-46
Engine running tests	2-24	2-51
Engine temperature sending unit:		
Installation	4-28b	4-51
Removal	4-28a	4-51
Engine, transmission, and power steering oil cooler assembly:		
Cleaning and inspection	3-8c	3-14
Installation	3-8b	3-14
Removal	3-8a	3-12
Engine wiring harness:		
Installation	18-6b	18-40
Removal	18-6a	18-34
Equipment description and data:		
Differences between models	1-14	1-18
Equipment characteristics, capabilities, and features	1-10	1-2
Location and contents of warning, caution, and data plates	1-13	1-8
Location and description of major exterior components	1-11	1-5
Location and description of major interior components	1-12	1-6
Tabulated data	1-15	1-19
Equipment Improvement Recommendations (EIR), reporting	1-5	1-1
Equipment Improvement Report and Maintenance Digest (EIR MD)	1-6	1-1
Evaporator drain hose, A/C front:		
Installation	11-83b	11-149
Removal	11-83a	11-149
Evaporator drain hose, A/C rear:		
Installation	11-88b	11-158
Removal	11-88a	11-158

INDEX (Cont'd)

	Para.	Page
E (Cont'd)		
Exhaust assembly, deep water fording kit:		
Inspection	12-38b	12-70
Installation	12-38c	12-70
Removal	12-38a	12-70
Exhaust manifold heat shield, right:		
Installation	3-56b	3-102
Removal	3-56a	3-102
Exhaust manifolds:		
Installation	3-57b	3-104
Removal	3-57a	3-104
Exhaust pipe:		
Installation	3-50b	3-94
Removal	3-50a	3-94
Exhaust pipe, manifold-to-turbocharger:		
Installation	3-51b	3-96
Removal	3-51a	3-96
Exhaust reinforcement bracket:		
Installation	12-49b	12-84
Removal	12-49a	12-84
Exhaust system maintenance task summary	3-47	3-90
Expendable/durable supplies and materials list: appendix C		C-1
Exterior components, location and description of major	1-11	1-5
F		
Fabricated tools	2-3	2-1
Fairlead roller bracket assembly, 10,500 lb rear hydraulic winch (M1114):		
Installation	12-36.3b	12-68.6
Removal	12-36.3a	12-68.6
Fan access panel, condenser		
Inspection	11-86b	11-154
Installation	11-86c	11-154
Removal	11-86a	11-154
Fan cut-off switch:		
Installation	4-42b	4-69
Removal	4-42a	4-69
Fan drive and fan blade:		
Inspection	3-80b	3-140
Installation	3-80c	3-140
Removal	3-80a	3-140
Fan drive friction lining:		
Installation	3-83b	3-147
Removal	3-83a	3-147
F (Cont'd)		
Fan drive hose and quick-disconnect:		
Installation	3-69b	3-124
Removal	3-69a	3-124
Fan exhaust and supply vent, condenser:		
Exhaust vents installation	11-85d	11-152
Exhaust vents removal	11-85a	11-152
Inspection	11-85c	11-152
Supply vents installation	11-85e	11-152
Supply vents removal	11-85b	11-152
Fan shroud assembly, radiator and:		
Cleaning and inspection	3-62b	3-114
Installation	3-62c	3-114
Removal	3-62a	3-112
Fan temperature switch:		
Installation	4-34b	4-60
Removal	4-34a	4-60
Features, characteristics, capabilities, and equipment	1-10	1-2
Field glasses bracket:		
Installation	11-65b	11-125
Removal	11-65a	11-125
Filler cap and spout, fuel tank:		
Inspection	3-29b	3-58
Installation	3-29c	3-58
Removal	3-29a	3-58
Filler spout hose:		
Installation	3-31b	3-62
Removal	3-31a	3-62
Filler tube, engine oil:		
Inspection	3-3b	3-4
Installation	3-3c	3-4
Removal	3-3a	3-4
Filter adapter, engine oil:		
Inspection	3-4b	3-5
Installation	3-4c	3-5
Removal	3-4a	3-5
Filter element, air cleaner:		
Cleaning	3-13d	3-26
Emergency cleaning	3-13c	3-24
Inspection	3-13b	3-24
Installation	3-13e	3-26
Removal	3-13a	3-24
Filter, fuel:		
Bleeding	3-33c	3-65
Installation	3-33b	3-64
Removal	3-33a	3-64
Filter, power steering reservoir (P/N 94252A):		
Installation	8-30b	8-82
Removal	8-30a	8-82

INDEX (Cont'd)

	Para.	Page
F (Cont'd)		
Fire extinguisher bracket:		
Inspection	10-53b	10-88
Installation	10-53c	10-88
Removal	10-53a	10-88
Firewall armor:		
Inspection	11-48b	11-96
Installation	11-48c	11-96
Removal	11-48a	11-96
Fixed rear door:		
Installation	10-20b	10-33
Removal	10-20a	10-33
Flasher, directional signal:		
Installation	4-61b	4-102
Removal	4-61a	4-102
Flexible latch and holddown strike, engine access cover:		
Installation	10-21b	10-34
Removal	10-21a	10-34
Floor drain hole plate:		
Installation	10-58.1	10-98.2
Floor insulation, rear seat:		
Installation	10-34b	10-60
Removal	10-34a	10-60
Floor panel repair	33-10	33-18
Floor panel repair, left front:		
Insert panel and left front floor panel installation	33-11i	33-36
Left front floor panel and insert panel drilling	33-11h	33-32
Left front floor panel removal	33-11c	33-24
Left front insert panel fabrication	33-11a	33-19
Metal strip A and insert panel assembly	33-11d	33-26
Metal strip B and insert panel assembly	33-11g	33-30
Metal strip C and insert panel assembly	33-11e	33-28
Metal strip D and insert panel assembly	33-11f	33-30
Metal strips fabrication	33-11b	33-20
Floor panel repair, left rear:		
Insert panel and left rear floor panel installation	33-12l	33-64
Left rear floor panel and insert panel drilling	33-12k	33-62
Left rear floor panel removal	33-12d	33-47
Left rear insert panel fabrication	33-12a	33-40
Metal strip C and insert panel assembly	33-12g	33-54
Metal strip D and insert panel assembly	33-12h	33-56
Metal strip E and insert panel assembly	33-12i	33-58
Metal strip F and insert panel assembly	33-12j	33-60
Metal strips fabrication	33-12c	33-44
Reinforcement strip A and insert panel assembly	33-12e	33-50
Reinforcement strip B and insert panel assembly	33-12f	33-52
Reinforcement strips fabrication	33-12b	33-42
Floor panel repair, right front:		
Battery tray and right front floor panel installation	33-13i	33-84
Insert panel and right front floor panel installation	33-13j	33-86
Metal strip A and insert panel assembly	33-13d	33-74
Metal strip B and insert panel assembly	33-13e	33-76
Metal strip C and insert panel assembly	33-13f	33-78
Metal strips fabrication	33-13b	33-70
Right front floor panel and battery tray drilling	33-13g	33-80
Right front floor panel and insert panel drilling	33-13h	33-82
Right front floor panel removal	33-13c	33-72
Right front insert panel fabrication	33-13a	33-68
Floor panel repair, right rear:		
Insert panel and right rear floor panel installation	33-14k	33-104
Metal strip C and insert panel assembly	33-14g	33-99
Metal strip D and insert panel assembly	33-14i	33-101
Metal strip E and insert panel assembly	33-14h	33-100
Metal strips fabrication	33-14c	33-92
Reinforcement strip A and insert panel assembly	33-14e	33-97
Reinforcement strip B and insert panel assembly	33-14f	33-98
Reinforcement strips fabrication	33-14b	33-90
Right rear floor panel removal	33-14d	33-94
Right rear floor panel and insert panel drilling	33-14j	33-102
Right rear insert panel fabrication	33-14a	33-88
Footman loop and strap:		
Inspection	10-13b	10-22
Installation	10-13c	10-22
Removal	10-13a	10-22

INDEX (Cont'd)

	Para.	Page
F (Cont'd)		
Footwell inner armor, passenger side:		
Inspection	25-11a.1	25-30
Installation	25-11b	25-30
Removal	25-11a	25-30
Footwell outer armor, passenger side:		
Inspection	25-10a.1	25-28
Installation	25-10b	25-28
Removal	25-10a	25-28
Former, A-pillar, assembly:		
Installation	10-90b	10-152
Removal	10-90a	10-152
Forward clutch assembly:		
Assembly	28-11d	28-44
Cleaning	28-11b	28-42
Disassembly	28-11a	28-42
Inspection	28-11c	28-42
Fourth clutch assembly:		
Assembly	28-12d	28-46
Cleaning	28-12b	28-46
Disassembly	28-12a	28-46
End play measurement	28-12e	28-47
Inspection	28-12c	28-46
Frame:		
Maintenance task summary (DS)	24-3	24-1
Maintenance task summary (GS)	32-3	32-1
Maintenance task summary (unit)	9-1	9-1
Frame extension:		
Installation	9-3b	9-3
Removal	9-3a	9-3
Frame, grille:		
Installation	10-16b	10-26
Removal	10-16a	10-25
Frame inspection and repair:		
General information	32-4a	32-2
Inspection	32-4c	32-4
Powertrain lift sling installation	32-4b	32-3
Powertrain lift sling removal	32-4f	32-10
Preparation and materials	32-4d	32-8
Repair procedures	32-4e	32-8
Steering gear mounting area inspection	32-4c.1	32-6.2
Frame, turret:		
Installation	25-4b	25-6
Removal	25-4a	25-4
Front and rear axles maintenance task summary	6-6	6-12
F (Cont'd)		
Front bumper and towing brackets:		
Installation	9-2b	9-2
Removal	9-2a	9-2
Front composite light assembly:		
Installation	4-53b	4-90
Removal	4-53a	4-90
Front composite light lamp:		
Installation	4-54b	4-92
Removal	4-54a	4-92
Front cover oil seal:		
Installation	15-13b	15-28
Removal	15-13a	15-28
Front differential:		
Alignment	21-5.1	21-8.2
Front door and hinge:		
Installation	11-2b	11-4
Removal	11-2a	11-4
Front fairlead roller bracket assembly:		
Installation	12-30b	12-59
Removal	12-30a	12-59
Front geared hub vent line:		
Installation	6-16b	6-42
Removal	6-16a	6-426
Front grille screen:		
Installation	10-15b	10-24
Removal	10-15a	10-24
Front propeller shaft:		
Assembly	21-8b	21-19
Disassembly	21-8a	21-19
Front propeller shaft assembly:		
Assembly	6-3c	6-7
Cleaning and inspection	6-3b	6-6
Disassembly	6-3a	6-6
Inspection	6-2b	6-2
Installation	6-2c	6-4
Removal	6-2a	6-2
Front servo:		
Assembly	28-15d	28-57
Cleaning	28-15b	28-57
Disassembly	28-15a	28-57
Inspection	28-15c	28-57
Front suspension brace:		
Installation	24-6b	24-4
Removal	24-6a	24-4
Front suspension front cross-member:		
Installation	24-16b	24-24
Removal	24-16a	24-24

INDEX (Cont'd)

	Para.	Page
F (Cont'd)		
Front suspension rear cross-member:		
Installation	24-17b	24-28
Removal	24-17a	24-26
Front upper control arm brackets, left airlift bracket and:		
Installation	24-7b	24-6
Removal	24-7a	24-6
Front upper control arm brackets, right airlift bracket and:		
Installation	24-8b	24-8
Removal	24-8a	24-8
Front wheel toe-in alignment:		
Preliminary inspection	8-9a	8-24
Toe-in adjustment	8-9c	8-28
Toe-in check	8-9b	8-26
Front 10,500 lb hydraulic winch cable replacement (M1113):		
Installation	12-28.1b	12-56.2
Removal	12-28.1a	12-56.2
Front winch:		
Installation	12-27b	12-54
Removal	12-27a	12-52
Front winch, 10,500 lb hydraulic (M1113):		
Brackets installation	12-27.1c	12-54.4
Brackets removal	12-27.1b	12-54.4
Winch installation	12-27.1d	12-54.4
Winch removal	12-27.1a	12-54.2
Front winch clutch rod:		
Installation	12-31b	12-60
Removal	12-31a	12-60
Front winch, 10,500 lb hydraulic hose replacement (M1113):		
Installation	12-31.1b	12-60.4
Removal	12-31.1a	12-60.2
Front winch, 10,500 lb hydraulic winch controller plug (M1113):		
Installation	12-32.1b	12-62.5
Removal	12-32.1a	12-62
Front winch receptacle bracket:		
Installation	12-32b	12-61
Removal	12-32a	12-61
Fuel door:		
Installation	10-3b	10-5
Removal	10-3a	10-5
Fuel door catch:		
Installation	10-4b	10-6
Removal	10-4a	10-6
Fuel drain-back tube:		
Installation	3-38b	3-76
Removal	3-38a	3-76

	Para.	Page
F (Cont'd)		
Fuel filler housing:		
Inspection	10-2b	10-4
Installation	10-2c	10-4
Removal	10-2a	10-3
Fuel filter:		
Bleeding	3-33c	3-65
Installation	3-33b	3-64
Removal	3-33a	3-64
Fuel filter drain hose and valve:		
Installation	3-35b	3-68
Removal	3-35a	3-68
Fuel filter element:		
Cleaning and inspection	3-34b	3-66
Element installation	3-34c	3-67
Element removal	3-34a	3-66
Fuel injection lines:		
Bleeding	16-4d	16-5
Inspection	16-4b	16-4
Installation	16-4c	16-5
Removal	16-4a	16-4
Fuel injection lines bracket, left:		
Installation	3-41b	3-80
Removal	3-41a	3-80
Fuel injection lines bracket, right:		
Installation	3-40b	3-79
Removal	3-40a	3-79
Fuel injection nozzle:		
Installation	16-3b	16-3
Removal	16-3a	16-2
Fuel injection pump:		
Installation	16-6c	16-10
Removal	16-6a	16-8
Repair	16-6b	16-10
Fuel injection pump boot:		
Installation	3-23b	3-39
Removal	3-23a	3-39
Fuel injection pump cold-advance solenoid:		
Inspection	16-9b	16-18
Installation	16-9c	16-18
Removal	16-9a	16-18
Fuel injection pump cover:		
Installation	16-7b	16-14
Removal	16-7a	16-12
Fuel injection pump return hose check valve:		
Cleaning and inspection	3-36b	3-70
Installation	3-36c	3-70
Removal	3-36a	3-70
Fuel injection pump shutoff solenoid:		
Inspection	16-8b	16-16
Installation	16-8c	16-16
Removal	16-8a	16-16

INDEX (Cont'd)

	Para.	Page
F (Cont'd)		
Fuel injection return hoses:		
Fuel drain-back hose installation	3-37b	3-72
Fuel drain-back hose removal	3-37a	3-72
Nozzle cap installation	3-37h	3-74
Nozzle cap removal	3-37g	3-74
Nozzle-to-nozzle hose installation	3-37f	3-74
Nozzle-to-nozzle hose removal	3-37e	3-74
Tube-to-nozzle hose installation	3-37d	3-72
Tube-to-nozzle hose removal	3-37c	3-72
Fuel level sending unit:		
Installation	4-32b	4-56
Removal	4-32a	4-56
Fuel pickup and return lines, auxiliary:		
Installation	3-27b	3-54
Removal	3-27a	3-54
Fuel pressure transducer:		
Installation	4-30b	4-54
Removal	4-30a	4-54
Fuel pump:		
Installation	3-24b	3-40
Removal	3-24a	3-40
Fuel pump vent lines, air intake and:		
Installation	3-21b	3-37
Removal	3-21a	3-37
Fuel system:		
Maintenance task summary (DS)	16-2	16-1
Maintenance task summary (unit)	3-11	3-21
Fuel system bleeding, vehicular heater	12-14	12-24
Fuel system operation	1-19	1-25
Fuel system tests	2-28	2-99
Fuel tank and shield:		
Assembly	3-25e	3-48
Cleaning and inspection	3-25d	3-46
Disassembly	3-25c	3-46
Draining	3-25a	3-42
Installation	3-25f	3-50
Removal	3-25b	3-42
Fuel tank filler cap and spout:		
Inspection	3-29b	3-58
Installation	3-29c	3-58
Removal	3-29a	3-58
Fuel tank filler spout vent line:		
Installation	3-30b	3-60.2
Removal	3-30a	3-60
Fuel tank hangers:		
Installation	3-32b	3-63
Removal	3-32a	3-63

	Para.	Page
G (Cont'd)		
Fuel tank supply and return lines:		
Installation	3-26b	3-52
Removal	3-26a	3-52
Fuel tank vent line and filter:		
Installation	3-28b	3-56
Removal	3-28a	3-56
Fuel tank vent stack tube:		
Installation	12-42b	12-76
Removal	12-42a	12-76
G		
Gauge, air restriction:		
Installation	3-17b	3-32
Removal	3-17a	3-32
Gauge, electrical:		
Installation	4-16b	4-34
Removal	4-16a	4-34
Geared hub:		
Assembly	21-6d	21-14
Cleaning	21-6b	21-12
Disassembly	21-6a	21-10
Inspection	21-6c	21-12
Installation	6-9b	6-24
Removal	6-9a	6-22
Geared hub input seal:		
Installation	6-10b	6-28
Removal	6-10a	6-28
Geared hub side cover:		
Cleaning and inspection	6-8b	6-20
Installation	6-8c	6-20
Removal	6-8a	6-20
Geared hub spindle bearing adjustment	6-12	6-35
Geared hub spindle seal:		
Installation	6-11b	6-32
Removal	6-11a	6-30
Geared hub vent line, front:		
Installation	6-16b	6-42
Removal	6-16a	6-42
Geared hub vent line, rear:		
Installation	6-15b	6-40
Removal	6-15a	6-40
Gear, steering:		
Installation	8-20b	8-58
Removal	8-20a	8-56
Gear unit and output assemblies:		
Assembly (1995)	28-8d	28-30
Assembly (1996-1998)	28-8d.1	28-30.2
Cleaning	28-8b	28-28
Disassembly (1995)	28-8a	28-26
Disassembly (1996-1998)	28-8a.1	28-26.2
Inspection	28-8c	28-28

INDEX (Cont'd)

	Para.	Page
G (Cont'd)		
General engine maintenance task summary	15-2	15-1
General information, introduction:		
Break-in procedures	1-9	1-2
Destruction of Army equipment to prevent enemy use	1-3	1-1
Equipment Improvement Report and Maintenance Digest (EIR MD)	1-6	1-1
Maintenance forms, records, and reports	1-2	1-1
Mandatory replacement parts	1-8	1-2
Metric system	1-7	1-2
Preparation for storage and shipment	1-4	1-1
Reporting Equipment Improvement Recommendations (EIR)	1-5	1-1
Scope of manual	1-1	1-1
General instructions, preparation for stowage and shipment:		
Administrative storage	13-2	13-1
Cleaning	13-6	13-2
General storage and shipping information	13-5	13-2
Inspections, stowage, and inventory	13-7	13-2
Lubrication	13-9	13-3
Records and reports	13-10	13-3
Repair, painting, and preservation	13-8	13-3
Scope	13-1	13-1
Security	13-3	13-1
Special packaging and shipping requirements	13-4	13-1
General maintenance instructions task summary	2-13	2-30
Generating and protective control box system maintenance task summary	4-1	4-1
Generating system operation	1-22	1-29
Glossary of abbreviations and commonly used terms	2-21	2-42
Glow plug:		
Installation	3-39b	3-78
Removal	3-39a	3-78
Glow plug circuit tests	2-37	2-289
Glow plug controller:		
Installation	4-33b	4-58
Removal	4-33a	4-58
Glow plug tip removal (damaged or broken)	15-22	15-40
Grille and screen, hood:		
Installation	10-17b	10-27
Removal	10-17a	10-27
G (Cont'd)		
Grille frame:		
Installation	10-16b	10-26
Removal	10-16a	10-25
Grille screen, front:		
Installation	10-15b	10-24
Removal	10-15a	10-24
Grommet, service headlight and blackout drive light electrical connector and:		
Installation	4-65b	4-106
Removal	4-65a	4-106
Grooved idler pulley and support (serial numbers 196901 and above):		
Installation	3-82.3b	3-144.2
Removal	3-82.3a	3-144.2
Ground strap, antenna:		
Installation	12-20b	12-36
Removal	12-20a	12-35
Guards, brake protection:		
Installation	7-11b	7-34
Removal	7-11a	7-34
Gunner, adjustable stand:		
Installation	11-71.3b	11-132.6
Removal	11-71.3a	11-132.6
Gunner shield:		
Installation	11-71.1b	11-132.2
Removal	11-71.1a	11-132.2
Gunner's sling and hook:		
Installation	11-56b	11-109
Removal	11-56a	11-109
Gunner's platform, stowage pedestal and:		
Inspection	11-71a.1	11-132
Installation	11-71b	11-132
Removal	11-71a	11-132
Gunner platform:		
Inspection	11-71.2b	11-132.4
Installation	11-71.2c	11-132.4
Removal	11-71.2a	11-132.4
H		
Halfshaft:		
Assembly	6-7e	6-17
Cleaning and inspection	6-7c	6-16
Disassembly	6-7b	6-14
Installation	6-7f	6-18
Removal	6-7a	6-13
Wear sleeve installation	6-7d	6-17
Handle assembly, door:		
Installation	10-19c	10-32
Removal	10-19a	10-30
Repair	10-19b	10-30
Handle, door:		
Installation	11-5b	11-12
Removal	11-5a	11-12

INDEX (Cont'd)

	Para.	Page
H (Cont'd)		
Hand throttle control cable and bracket:		
Installation	3-46b	3-88
Removal	3-46a	3-88
Hanger, muffler:		
Installation	3-59b	3-107
Removal	3-59a	3-107
Hangers, fuel tank:		
Installation	3-32b	3-63
Removal	3-32a	3-63
Hanger, tailpipe:		
Installation	3-53b	3-98
Removal	3-53a	3-98
Hatch assembly components, turret:		
Hatch support rod clip installation	11-61g	11-118
Hatch support rod clip removal	11-61d	11-117
Pivot lug installation	11-61i	11-118
Pivot lug removal	11-61b	11-116
Pivot rod installation	11-61j	11-118
Pivot rod removal	11-61a	11-116
Protective bumper installation	11-61f	11-118
Protective bumper removal	11-61e	11-117
Strap fastener loop installation	11-61h	11-118
Strap fastener loop removal	11-61c	11-116
Hatch pivot base, turret:		
Installation	11-59b	11-113
Removal	11-59a	11-113
Header:		
Inspection	25-5b	25-8
Installation	25-5c	25-8
Removal	25-5a	25-8
Headlight assembly, service:		
Installation	4-50b	4-84
Removal	4-50a	4-84
Headlight beam selector switch and bracket:		
Installation	4-59b	4-99
Removal	4-59a	4-99
Headlight housing:		
Installation	10-18b	10-28
Removal	10-18a	10-28
Headlight lamp, service:		
Adjustment	4-49c	4-83
Installation	4-49b	4-82
Removal	4-49a	4-82
Headphone mounting bracket:		
Installation	12-19b	12-34
Removal	12-19a	12-34
Heater assembly, rear:		
Inspection	10-75.1b	10-128.3
Installation	10-75.1c	10-128.4
Removal	10-75.1a	10-128.2
H (Cont'd)		
Heater assembly:		
Installation	10-76b	10-130
Removal	10-76a	10-129
Heater assembly, engine/crew compartment:		
Installation	12-10b	12-18
Removal	12-10a	12-18
Heater boot:		
Installation	10-85b	10-147
Removal	10-85a	10-147
Heater circuit breaker, engine/crew compartment:		
Installation	12-12b	12-22
Removal	12-12a	12-22
Heater control:		
Installation	10-78b	10-134
Removal	10-78a	10-134
Heater control cable and shutoff valve adjustment	10-79	10-136
Heater controller, engine/crew compartment:		
Installation	12-13b	12-23
Removal	12-13a	12-23
Heater deflector:		
Installation	10-87b	10-149
Removal	10-87a	10-149
Heater ducting:		
Installation	10-80b	10-138
Removal	10-80a	10-138
Heater exhaust muffler, engine/crew compartment:		
Installation	12-3b	12-2.2
Removal	12-3a	12-2.2
Heater exhaust pipe, engine/crew compartment:		
Installation	12-4b	12-3
Removal	12-4a	12-3
Heater fan motor resistor assembly:		
Installation	10-75b	10-128
Removal	10-75a	10-127
Heater fan switch:		
Installation	10-73b	10-125
Removal	10-73a	10-125
Heater fuel lines, engine/crew compartment:		
Heater fuel line installation	12-8b	12-12
Heater fuel line removal	12-8a	12-12
Tank fuel line and supply tube installation	12-8d	12-12
Tank fuel line and supply tube removal	12-8c	12-14

INDEX (Cont'd)

	Para.	Page
H (Cont'd)		
Heater fuel pump, engine/crew compartment:		
Installation	12-9b	12-16
Removal	12-9a	12-16
Heater fuel system bleeding, engine/crew compartment	12-14	12-24
Heater harness, engine/crew compartment:		
Installation	12-11b	12-20
Removal	12-11a	12-20
Heater heat shield, engine/crew compartment:		
Installation	12-2b	12-2
Removal	12-2a	12-2
Heater hose:		
Installation	10-88b	10-150
Removal	10-88a	10-150
Heater hoses and tubes, rear:		
Inspection	10-75.2b	10-128.9
Installation	10-75.2c	10-128.10
Removal	10-75.2a	10-128.6
Heater inlet pipe, engine/crew compartment:		
Installation	12-4.1b	12-4
Removal	12-4.1a	12-4
Heater outlet hose assembly, engine/crew compartment:		
Installation	12-6b	12-8
Removal	12-6a	12-8
Heater outlet/inlet piping:		
Inspection	10-71b	10-122
Installation	10-71c	10-122
Removal	10-71a	10-122
Heater circulating pump, engine/crew compartment:		
Installation	12-7b	12-10
Removal	12-7a	12-10
Heater line guard and cover, rear:		
Inspection	10-88.1b	10-150.2
Installation	10-88.1c	10-150.2
Removal	10-88.1a	10-150.2
Heater lower hose assembly, engine/crew compartment:		
Installation	12-5b	12-6
Removal	12-5a	12-6
Heater manifolds, rear:		
Inspection	10-88.2b	10-150.4
Installation	10-88.2c	10-150.6
Removal	10-88.2a	10-150.4
Heater shutoff valve:		
Installation	10-72b	10-124
Removal	10-72a	10-124

	Para.	Page
H (Cont'd)		
Heat shield, rear:		
Installation	3-52b	3-97
Removal	3-52a	3-97
Heat shield, right exhaust manifold:		
Installation	3-56b	3-102
Removal	3-56a	3-102
Heat shield, right rear:		
Installation	3-58b	3-106
Removal	3-58a	3-106
High-beam lamp:		
Installation	4-22b	4-45
Removal	4-22a	4-45
Hinge, front door and:		
Installation	11-2b	11-4
Removal	11-2a	11-4
Hinge, hood and:		
Alignment	10-9c	10-18
Installation	10-9b	10-16
Removal	10-9a	10-14
Hinge mount, body:		
Installation	10-54b	10-89
Removal	10-54a	10-89
Hinge, rear door and:		
Installation	11-2.1b	11-4.2
Removal	11-2.1a	11-4.2
Hinge, soft top door:		
Installation	10-91b	10-153
Removal	10-91a	10-153
Hinge, tailgate upper:		
Installation	10-39b	10-68
Removal	10-39a	10-67
Holddown, battery:		
Installation	4-73b	4-126
Removal	4-73a	4-126
Holddown strike, engine access cover flexible latch and:		
Installation	10-21b	10-34
Removal	10-21a	10-34
Hood and hinge:		
Alignment	10-9c	10-18
Installation	10-9b	10-16
Removal	10-9a	10-14
Hood grille and screen:		
Installation	10-17b	10-27
Removal	10-17a	10-27
Hood jumper wiring harness:		
Installation	4-79b	4-143
Removal	4-79a	4-140
Hood latch:		
Assembly	10-5c	10-8
Disassembly	10-5b	10-7
Installation	10-5d	10-8
Removal	10-5a	10-7

INDEX (Cont'd)

	Para.	Page
H (Cont'd)		
Hood latch bracket:		
Installation	10-6b	10-10
Removal	10-6a	10-9
Hood latch tapping plate:		
Installation	10-7b	10-11
Removal	10-7a	10-11
Hood prop rod and bracket:		
Assembly	10-8d	10-12
Disassembly	10-8b	10-12
Inspection	10-8c	10-12
Installation	10-8e	10-13
Removal	10-8a	10-12
Hood seal, outer:		
Installation	10-10b	10-19
Removal	10-10a	10-19
Hood stop, center:		
Installation	10-12b	10-21
Removal	10-12a	10-21
Hood stop guide, center:		
Installation	10-14b	10-23
Removal	10-14a	10-23
Hood stop, side:		
Installation	10-11b	10-20
Removal	10-11a	10-20
Horn:		
Installation	4-26b	4-49
Removal	4-26a	4-49
Horn control brush:		
Installation	4-25b	4-48
Removal	4-25a	4-48
Horn mounting bracket:		
Installation	4-27b	4-50
Removal	4-27a	4-50
Horn switch:		
Installation	4-24b	4-47
Removal	4-24a	4-47
Hose, air restriction gauge:		
Installation	3-20b	3-36
Removal	3-20a	3-36
Hose, filler spout:		
Installation	3-31b	3-62
Removal	3-31a	3-62
Hose, fuel filter drain and valve:		
Installation	3-35b	3-68
Removal	3-35a	3-68
Hose, 10,500 lb hydraulic winch (M1113):		
Installation	12-31.1b	12-60.4
Removal	12-31.1a	12-60.2
Hose, 10,500 lb rear hydraulic winch (M1114):		
Installation	12-36.4b	12-68.14
Removal	12-36.4a	12-68.8
H (Cont'd)		
Hose, overflow, surge tank:		
Installation	3-75b	3-131
Removal	3-75a	3-131
Hose, power steering hydraulic system pressure and return:		
Installation	8-24b	8-66.2
Removal	8-24a	8-66
Hose, radiator inlet:		
Installation	3-70b	3-126
Removal	3-70a	3-126
Hose, radiator, lower:		
Installation	3-72b	3-128
Removal	3-72a	3-128
Hoses, return, fuel injection:		
Fuel drain-back hose installation	3-37b	3-72
Fuel drain-back hose removal	3-37a	3-72
Nozzle cap installation	3-37h	3-74
Nozzle cap removal	3-37g	3-74
Nozzle-to-nozzle hose installation	3-37f	3-74
Nozzle-to-nozzle hose removal	3-37e	3-74
Tube-to-nozzle hose installation	3-37d	3-72
Tube-to-nozzle hose removal	3-37c	3-72
Hose, surge tank-to-lower radiator tube:		
Installation	3-74b	3-130
Removal	3-74a	3-130
Hoses, windshield washer:		
Installation	10-65b	10-110
Removal	10-65a	10-110
Hose, thermostat bypass:		
Installation	3-68b	3-123
Removal	3-68a	3-123
Hose, vent, surge tank-to-radiator:		
Installation	3-66b	3-121
Removal	3-67a	3-121
Hose, vent, surge tank-to-water crossover:		
Installation	3-67b	3-122
Removal	3-67a	3-122
Hose, water pump inlet:		
Installation	3-73b	3-129
Removal	3-73a	3-129
Housing, diverter manifold and:		
Installation	10-95b	10-160
Removal	10-95a	10-159
Housing, fuel filter:		
Inspection	10-2b	10-4
Installation	10-2c	10-4
Removal	10-2a	10-3
Housing, headlight:		
Installation	10-18b	10-28
Removal	10-18a	10-28

INDEX (Cont'd)

	Para.	Page
H (Cont'd)		
Housing, wastegate:		
Installation	15-18b	15-35
Removal	15-18a	15-35
How to use this manual		vii
How to use this troubleshooting guide	2-20	2-36
Hub, geared:		
Assembly	21-6d	21-14
Cleaning	21-6b	21-12
Disassembly	21-6a	21-10
Inspection	21-6c	21-12
Installation	6-9b	6-24
Removal	6-9a	6-22
Hydraulic system pressure and return hose, power steering:		
Installation	8-24b	8-66.2
Removal	8-24a	8-66
Hydraulic system pressure hose, power steering (serial numbers 196901 and above):		
Installation	8-24.1b	8-66.4
Removal	8-24.1a	8-66.4
Hydraulic valve lifter:		
Installation	15-9b	15-18
Removal	15-9a	15-18
Hydro-booster:		
Installation	7-6b	7-16
Removal	7-6a	7-16
Hydro-boost vent line:		
Installation	12-45b	12-80
Removal	12-45a	12-80
I		
Idler arm:		
Inspection	8-17a	8-46
Installation	8-17c	8-48
Removal	8-17b	8-48
Idler pulley and support, grooved:		
Installation	3-82.3b	3-144.2
Removal	3-82.3a	3-144.2
Idler pulleys, and mounting hardware, tensioner:		
Installation	3-82b	3-144
Removal	3-82a	3-144
Idler pulley bracket (serial numbers 196901 and above):		
Installation	3-82.7b	3-146
Removal	3-82.7a	3-146
Idler pulley (serial numbers 196901 and above):		
Installation	3-82.6b	3-145
Removal	3-82.6a	3-145
I (Cont'd)		
Idler pulley and support vehicles w/o A/C (serial numbers 196901 and above):		
Installation	3-82.2b	3-144.1
Removal	3-82.2a	3-144.1
Idle speed adjustment, engine	3-45	3-87
Illustrated list of manufactured items: appendix D		D-1
Injection lines, fuel:		
Bleeding	16-4d	16-5
Inspection	16-4b	16-4
Installation	16-4c	16-5
Removal	16-4a	16-4
Injection nozzle, fuel:		
Installation	16-3b	16-3
Removal	16-3a	16-2
Injection pump cover, fuel:		
Installation	16-7b	16-14
Removal	16-7a	16-12
Injection pump, fuel:		
Installation	16-6c	16-10
Removal	16-6a	16-8
Repair	16-6b	16-10
Inner armor, driver's footwell:		
Inspection	11-41a.1	11-84
Installation	11-41b	11-84
Removal	11-41a	11-84
Inner rim stud:		
Cleaning and inspection	8-7b	8-20
Installation	8-7c	8-20
Removal	8-7a	8-19
Inside protection plate, left side rocker panel armor and:		
Inspection	11-34b	11-62
Installation	11-34c	11-62
Removal	11-34a	11-62
Inside protection plate, right side rocker panel armor and:		
Inspection	11-35b	11-64
Installation	11-35c	11-64
Removal	11-35a	11-64
Inspection:		
General maintenance	2-15	2-31
Instrument cluster:		
Installation	4-14b	4-31
Removal	4-14a	4-30
Instrument cluster light:		
Lamp installation	4-19b	4-40
Lamp removal	4-19a	4-40
Light assembly installation	4-19d	4-41
Light assembly removal	4-19c	4-41

INDEX (Cont'd)

	Para.	Page
I (Cont'd)		
Instrument panel:		
Installation	4-15b	4-32
Removal	4-15a	4-32
Instruments, sending units, switches, and horn maintenance task summary	4-13	4-29
Instrument tests	2-38	2-305
Insulation, left front cowl:		
Installation	10-31b	10-56
Removal	10-31a	10-56
Insulation, left outer cowl:		
Installation	10-30b	10-55
Removal	10-30a	10-55
Insulation, left side interior:		
Installation	25-37b	25-116
Removal	25-37a	25-116
Insulation panel:		
Installation	11-30b	11-54
Removal	11-30a	11-54
Insulation, rear seat floor:		
Installation	10-34b	10-60
Removal	10-34a	10-60
Insulation, right front cowl:		
Installation	10-32b	10-58
Removal	10-32a	10-58
Insulation, tunnel interior side:		
Installation	10-33b	10-59
Removal	10-33a	10-59
Insulator, engine mount and:		
Assembly	15-3c	15-4
Disassembly	15-3b	15-4
Installation	15-3d	15-6
Removal	15-3a	15-2
Insulator, tailpipe:		
Installation	3-54b	3-99
Removal	3-54a	3-99
Intake crossover:		
Installation	15-20b	15-37
Removal	15-20a	15-37
Intake manifold, left:		
Installation	15-16b	15-32
Removal	15-16a	15-32
Intake manifold, right:		
Installation	15-17b	15-34
Removal	15-17a	15-34
Intercom and brackets:		
Installation	11-63b	11-122
Removal	11-63a	11-122
Interior components, location and description of major	1-12	1-6
I (Cont'd)		
Intermediate body mount bracket, left:		
Installation	32-7b	32-13
Removal	32-7a	32-13
Intermediate body mount bracket, right:		
Installation	32-6b	32-12
Removal	32-6a	32-12
Intermediate clutch assembly and front band:		
Inspection	28-14	28-56
Intermediate steering shaft:		
Installation	8-19b	8-54
Removal	8-19a	8-54
Intermediate steering shaft close-off and retainer:		
Installation	8-22b	8-62
Removal	8-22a	8-62
J		
Jack retaining strap:		
Installation	10-9.1b	10-18.1
Removal	10-9.1a	10-18.1
Jacking instructions:		
Lowering corner of vehicle	8-2b	8-2
Lowering entire vehicle	8-2h	8-4
Lowering front of vehicle	8-2d	8-2
Lowering rear of vehicle	8-2f	8-4
Raising corner of vehicle	8-2a	8-2
Raising entire vehicle	8-2g	8-4
Raising front of vehicle	8-2c	8-2
Raising rear of vehicle	8-2e	8-4
K		
Kits, task summary, special purpose	26-2	26-1
L		
Lamp assembly, transfer case indicator:		
Installation	4-40b	4-67
Removal	4-40a	4-67
Lamp assembly, transmission indicator:		
Installation	4-41b	4-68
Removal	4-41a	4-68
Lamp, blackout drive light:		
Installation	4-52b	4-88
Removal	4-52a	4-88

INDEX (Cont'd)

	Para.	Page
L (Cont'd)		
Lamp, brake warning:		
Installation	4-21b	4-44
Removal	4-21a	4-44
Lamp, directional signal control indicator:		
Installation	4-62b	4-103
Removal	4-62a	4-103
Lamp, front composite light:		
Installation	4-54b	4-92
Removal	4-54a	4-92
Lamp, high-beam:		
Installation	4-22b	4-45
Removal	4-22a	4-45
Lamp, rear composite light:		
Installation	4-55b	4-93
Removal	4-55a	4-93
Lamp, service headlight:		
Adjustment	4-49c	4-83
Installation	4-49b	4-82
Removal	4-49a	4-82
Lamp, wait-to-start:		
Installation	4-20b	4-42
Removal	4-20a	4-42
Latch adjustment, door:		
Exterior handle adjustment	11-9a	11-18
Interior handle adjustment	11-9b	11-18
Locking rod adjustment	11-9c	11-18
Latch bracket, hood:		
Installation	10-6b	10-10
Removal	10-6a	10-9
Latch cover, door:		
Installation	11-6b	11-13
Removal	11-6a	11-13
Latch, door:		
Inspection	11-4b	11-10
Installation	11-4c	11-10
Removal	11-4a	11-10
Left airlift bracket and front upper control arm brackets:		
Installation	24-7b	24-6
Removal	24-7a	24-6
Left cylinder head:		
Installation	15-4c	15-10
Removal	15-4a	15-8
Repair	15-4b	15-8
Left defroster nozzle:		
Installation	10-83b	10-144
Removal	10-83a	10-144
Left engine mount bracket:		
Installation	24-10b	24-12
Removal	24-10a	24-12

	Para.	Page
L (Cont'd)		
Left footwell outer armor:		
Installation	11-40.1	11-82.2
Left front cowl insulation:		
Inspection	10-31b	10-56
Installation	10-31c	10-56
Removal	10-31a	10-56
Left front floor panel repair:		
Insert panel and left front floor panel installation	33-11i	33-36
Left front floor panel and insert panel drilling	33-11h	33-32
Left front floor panel removal	33-11c	33-24
Left front insert panel fabrication	33-11a	33-19
Metal strip A and insert panel assembly	33-11d	33-26
Metal strip B and insert panel assembly	33-11g	33-30
Metal strip C and insert panel assembly	33-11e	33-28
Metal strip D and insert panel assembly	33-11f	33-30
Metal strips fabrication	33-11b	33-20
Left front underbody armor:		
Inspection	11-36b	11-67
Installation	11-36c	11-68
Removal	11-36a	11-66
Left front underbody armor:		
New driver's side footwell inner armor installation	11-36.1b	11-68.4
New driver's side footwell outer armor installation	11-36.1a	11-68.2
New front underbody armor installation	11-36.1c	11-68.5
Left fuel injection lines bracket:		
Installation	3-41b	3-80
Removal	3-41a	3-80
Left intake manifold:		
Installation	15-16b	15-32
Removal	15-16a	15-32
Left intermediate body mount bracket:		
Installation	32-7b	32-13
Removal	32-7a	32-13
Left outer cowl insulation:		
Installation	10-30b	10-55
Removal	10-30a	10-55
Left parking brake cable/mounting bracket:		
Installation	7-17b	7-50
Removal	7-17a	7-48

INDEX (Cont'd)

	Para.	Page
L (Cont'd)		
Left rear door striker reinforcement		
Installation	25-13.7b	25-36.42
Removal	25-13.7a	25-36.42
Left rear floor panel repair:		
Insert panel and left rear floor panel installation	33-12l	33-64
Left rear floor panel and insert panel drilling	33-12k	33-62
Left rear floor panel removal	33-12d	33-47
Left rear insert panel fabrication	33-12a	33-40
Metal strip C and insert panel assembly	33-12g	33-54
Metal strip D and insert panel assembly	33-12h	33-56
Metal strip E and insert panel assembly	33-12i	33-58
Metal strip F and insert panel assembly	33-12j	33-60
Metal strips fabrication	33-12c	33-44
Reinforcement strip A and insert panel assembly	33-12e	33-50
Reinforcement strip B and insert panel assembly	33-12f	33-52
Reinforcement strips fabrication	33-12b	33-42
Left rear underbody armor:		
Inspection	11-37b	11-70
Installation	11-37c	11-72
Removal	11-37a	11-70
Left rocker arm cover:		
Installation	15-11b	15-24
Removal	15-11a	15-24
Left side A-pillar armor:		
Inspection	11-32b	11-58
Installation	11-32c	11-58
Removal	11-32a	11-58
Left side armor, A-beam:		
Installation	11-42b	11-86
Removal	11-42a	11-86
Left side rocker panel armor and inside protection plate:		
Inspection	11-34b	11-62
Installation	11-34c	11-62
Removal	11-34a	11-62
Left side tunnel insulation:		
Installation	25-37b	25-116
Removal	25-37a	25-116
Light assembly, blackout drive:		
Installation	4-51b	4-86
Removal	4-51a	4-86
L (Cont'd)		
Light assembly, front composite:		
Installation	4-53b	4-90
Removal	4-53a	4-90
Light assembly, rear composite:		
Installation	4-57b	4-96
Removal	4-57a	4-96
Light assembly, side marker:		
Installation	4-56b	4-94
Removal	4-56a	4-94
Lighting system maintenance task summary	4-48	4-81
Light, instrument cluster:		
Lamp installation	4-19b	4-40
Lamp removal	4-19a	4-40
Light assembly installation	4-19d	4-41
Light assembly removal	4-19c	4-41
Light switch, backup:		
Installation	4-36b	4-62
Removal	4-36a	4-62
Lights tests	2-39	2-375
Linkage, accelerator:		
Adjustment	3-43d	3-84
Inspection	3-43b	3-83
Installation	3-43c	3-84
Removal	3-43a	3-82
Linkage, windshield wiper:		
Installation	10-61b	10-103
Removal	10-61a	10-103
Link, center:		
Installation	8-15b	8-42
Removal	8-15a	8-42
Link, stabilizer bar:		
Installation	6-21b	6-50
Removal	6-21a	6-50
Location and contents of warning, caution, and data plates	1-13	1-8
Location and description of major exterior components	1-11	1-5
Location and description of major interior components	1-12	1-6
Locking pawl and connecting rod:		
Installation	11-7b	11-14
Removal	11-7a	11-14
Locking rod and door release handle:		
Installation	11-8b	11-16
Removal	11-8a	11-16
Lock, steering wheel:		
Installation	10-48b	10-82
Removal	10-48a	10-82
Lower ball joint:		
Inspection	6-24a	6-54
Installation	6-24c	6-54
Removal	6-24b	6-54

INDEX (Cont'd)

	Para.	Page
L (Cont'd)		
Lower control arm:		
Installation	6-26b	6-58
Removal	6-26a	6-58
Lower radiator hose:		
Installation	3-72b	3-128
Removal	3-72a	3-128
Lubrication system maintenance task summary	3-1	3-1
Lubrication system tests	2-26	2-69
M		
M13 decontamination brackets:		
Installation	10-58	10-98
M1114 air-conditioning system operation	1-29	1-39
Main light switch:		
Installation	4-58b	4-98
Removal	4-58a	4-98
Maintenance allocation chart: appendix B		B-1
Maintenance forms, records, and reports	1-2	1-1
Mandatory replacement parts: appendix G		G-1
Mandatory replacement parts, general	1-8	1-2
Manifold, diverter, housing:		
Installation	10-95b	10-160
Removal	10-95a	10-159
Manifold, intake, left:		
Installation	15-16b	15-32
Removal	15-16a	15-32
Manifold, intake, right:		
Installation	15-17b	15-34
Removal	15-17a	15-34
Manifolds, exhaust:		
Installation	3-57b	3-104
Removal	3-57a	3-104
Manifold-to-turbocharger exhaust pipe:		
Installation	3-51b	3-96
Removal	3-51a	3-96
Master cylinder:		
Bleeding	7-5c	7-15
Installation	7-5b	7-14
Removal	7-5a	7-14
Mechanical troubleshooting instructions (DS/GS)	14-2	14-1
M (Cont'd)		
Metric system	1-7	1-2
Mirror, rearview:		
Assembly	10-68d	10-118
Disassembly	10-68c	10-118
Inspection	10-68b	10-116
Installation	10-68e	10-118
Removal	10-68a	10-116
Models, differences between	1-14	1-18
Module, time-delay:		
Installation	4-35b	4-61
Removal	4-35a	4-61
Mount, body hinge:		
Installation	10-54b	10-89
Removal	10-54a	10-89
Mounting bracket, commander's control box:		
Installation	11-64b	11-124
Removal	11-64a	11-124
Mounting bracket vehicles w/o A/C (serial numbers 196901 and above):		
Installation	3-82.4b	3-144.3
Removal	3-82.4a	3-144.3
Mounting bracket vehicles w/A/C (serial numbers 196901 and above):		
Installation	3-82.5b	3-144.4
Removal	3-82.5a	3-144.4
Mounting clamp, rifle:		
Installation	11-67b	11-128
Removal	11-67a	11-128
Mounting hardware, tensioner, idler pulleys, and:		
Installation	3-82b	3-144
Removal	3-82a	3-144
Mount, night vision:		
Installation	11-60b	11-114
Removal	11-60a	11-114
Muffler and catalytic converter:		
Installation	3-49b	3-92
Removal	3-49a	3-92
Muffler hanger:		
Installation	3-59b	3-107
Removal	3-59a	3-107
Muffler support bracket:		
Assembly	3-55c	3-100
Disassembly	3-55b	3-100
Installation	3-55d	3-100
Removal	3-55a	3-100

INDEX (Cont'd)

	Para.	Page
N		
Neutral start switch:		
Installation	5-6b	5-16
Removal	5-6a	5-16
Night vision lid bumper and bracket:		
Installation	11-58b	11-112
Removal	11-58a	11-112
Night vision mount:		
Installation	11-60b	11-114
Removal	11-60a	11-114
Nozzle, left defroster:		
Installation	10-83b	10-144
Removal	10-83a	10-144
Nozzle, right defroster:		
Installation	10-84b	10-146
Removal	10-84a	10-146
Nozzle, windshield washer:		
Installation	10-66b	10-112
Removal	10-66a	10-112
O		
Odometer/speedometer:		
Installation	4-17b	4-36
Removal	4-17a	4-36
Oil cooler assembly, engine, transmission, and power steering:		
Cleaning and inspection	3-8c	3-14
Installation	3-8b	3-14
Removal	3-8a	3-12
Oil cooler lines, transmission:		
Front lines installation	5-3d	5-10
Front lines removal	5-3c	5-10
Rear lines installation	5-3b	5-8
Rear lines removal	5-3a	5-6
Oil cooler maintenance, radiator and	17-3	17-1
Oil cooler supply and return lines, engine:		
Inspection	3-7b	3-10
Supply line installation	3-7c	3-10
Supply line removal	3-7a	3-10
Oil dipstick tube, engine:		
Installation	3-2b	3-2
Removal	3-2a	3-2
Oil dipstick tube, transmission:		
Installation	5-5b	5-14
Removal	5-5a	5-14
Oil filler tube, engine:		
Inspection	3-3b	3-4
Installation	3-3c	3-4
Removal	3-3a	3-4
O (Cont'd)		
Oil filter adapter, engine:		
Inspection	3-4b	3-5
Installation	3-4c	3-5
Removal	3-4a	3-5
Oil pan:		
Installation	3-6b	3-8
Removal	3-6a	3-8
Oil pressure sending unit:		
Inspection	4-29b	4-52
Installation	4-29c	4-52
Removal	4-29a	4-52
Oil pump:		
Inspection	15-15b	15-30
Installation	15-15c	15-30
Removal	15-15a	15-30
Oil pump assembly:		
Assembly	28-18d	28-70
Cleaning	28-18b	28-66
Disassembly	28-18a	28-66
Inspection	28-18c	28-68
Oil pump drive:		
Installation	15-14b	15-29
Removal	15-14a	15-29
Oil seal, front cover:		
Installation	15-13b	15-28
Removal	15-13a	15-28
Oil service, engine:		
Filter installation	3-5c	3-6
Filter removal	3-5b	3-6
Oil draining	3-5a	3-6
Oil replenishing	3-5d	3-6
Outer armor, driver's footwell:		
Inspection	11-40b	11-82
Installation	11-40c	11-82
Removal	11-40a	11-82
Outer armor, passenger side footwell:		
Inspection	25-10a.1	25-28
Installation	25-10b	25-28
Removal	25-10a	25-28
Outer hood seal:		
Installation	10-10b	10-19
Removal	10-10a	10-19
Output Speed Sensor (TOSS), Transmission Input Speed Sensor (TISS) and:		
Inspection	4-47b	4-78
Installation	4-47c	4-78
Removal	4-47a	4-78

INDEX (Cont'd)

	Para.	Page
P		
Panel, instrument:		
Installation	4-15b	4-32
Removal	4-15a	4-32
Panel, insulation:		
Installation	11-30b	11-54
Removal	11-30a	11-54
Parking brake adjustment, rear dual service/	7-19	7-54
Parking brake cable/mounting bracket, left:		
Installation	7-17b	7-50
Removal	7-17a	7-48
Parking brake cable, right:		
Installation	7-16b	7-46
Removal	7-16a	7-46
Parking brake caliper, rear dual service/:		
Cleaning and inspection	7-15b	7-44
Installation	7-15c	7-44
Removal	7-15a	7-42
Parking brake lever:		
Installation	7-20b	7-56
Removal	7-20a	7-56
Parking brake pad, rear dual service/:		
Cleaning and inspection	7-14b	7-40
Installation	7-14c	7-40
Removal	7-14a	7-38
Parking brake rod, rear dual service/:		
Installation	7-18b	7-52
Removal	7-18a	7-52
Parking brake switch:		
Installation	4-23b	4-46
Removal	4-23a	4-46
Parking lock pawl and actuator assembly:		
Inspection	28-6	28-24
Parking, service/brake system operation	1-25	1-32
Partition, C-pillar:		
Assembly	25-9c	25-26
Disassembly	25-9b	25-24
Inspection	25-9b.1	25-26
Installation	25-9d	25-26
Removal	25-9a	25-24
Parts, mandatory replacement	1-8	1-2
Passenger seat:		
Assembly	10-45.1b	10-76.1
Disassembly	10-45.1a	10-76.1
Installation	10-45b	10-76
Removal	10-45a	10-76

	Para.	Page
P (Cont'd)		
Passenger side footwell inner armor:		
Inspection	25-11a.1	25-30
Installation	25-11b	25-30
Removal	25-11a	25-30
Passenger side footwell outer armor:		
Inspection	25-10a.1	25-28
Installation	25-10b	25-28
Removal	25-10a	25-28
Passenger side upper cowl liner:		
Installation	25-13b	25-36
Removal	25-13a	25-36
Pedal, accelerator:		
Installation	3-44b	3-86
Removal	3-44a	3-86
Pedal, service brake:		
Installation	7-9b	7-30
Removal	7-9a	7-30
Pedestal, stowage, and gunner's platform:		
Inspection	11-71a.1	11-132
Installation	11-71b	11-132
Removal	11-71a	11-132
Pinion seal:		
Installation	21-4b	21-4
Removal	21-4a	21-4
Pintle mount, turret:		
Inspection	11-62b	11-120
Installation	11-62c	11-120
Removal	11-62a	11-120
Pintle, towing:		
Assembly	9-9d	9-13
Cleaning	9-9c	9-12
Disassembly	9-9b	9-12
Installation	9-9e	9-14
Removal	9-9a	9-11
Pipe, exhaust:		
Installation	3-50b	3-94
Removal	3-50a	3-94
Piping, heater outlet/inlet:		
Inspection	10-71b	10-122
Installation	10-71c	10-122
Removal	10-71a	10-122
Pitman arm:		
Installation	8-14b	8-40
Removal	8-14a	8-40
Pivot, windshield wiper arm:		
Installation	10-60c	10-102
Removal	10-60b	10-102
Repair (optional)	10-60a	10-101
Plates, warning, caution, and data, location and contents of	1-13	1-8

INDEX (Cont'd)

	Para.	Page
P (Cont'd)		
Power cable:		
Installation	12-25b	12-48
Removal	12-25a	12-47
Power cable, 200-ampere dual voltage umbilical:		
Installation	4-7b	4-16
Removal	4-7a	4-14
Power cable, winch:		
Front power cable installation	4-77b	4-134
Front power cable removal	4-77a	4-134
Rear power cable installation	4-77d	4-136
Rear power cable removal	4-77c	4-136
Power feed-through stud:		
Installation	4-69b	4-116
Removal	4-69a	4-116
Power steering/alternator mounting bracket (serial numbers 196901 and above):		
Installation	4-3.1b	4-4
Removal	4-3.1a	4-4
Power steering cooler hose and manifold valve hoses:		
Installation	8-26b	8-72.2
Removal	8-26a	8-72
Power steering hydraulic system pressure and return hose:		
Installation	8-24b	8-66.2
Removal	8-24a	8-66
Power steering hydraulic system pressure hose (serial number 196901 and above):		
Installation	8-24.1b	8-66.4
Removal	8-24.1a	8-66.4
Power steering oil cooler assembly, engine, transmission, and:		
Cleaning and inspection	3-8c	3-14
Installation	3-8b	3-14
Removal	3-8a	3-12
Power steering pump:		
Assembly	23-3d	23-4
Cleaning	23-3b	23-4
Disassembly	23-3a	23-2
Inspection	23-3c	23-4
Power steering pump and pulley:		
Installation	8-23b	8-64
Removal	8-23a	8-64
Power steering pump and pulley (serial number 196901 and above):		
Installation	8-23.1b	8-64.2
Removal	8-23.1a	8-64.2
Power steering pump and steering gear leak test	23-4	23-6
P (Cont'd)		
Power steering relief valve cartridge:		
Inspection	8-28b	8-76
Installation	8-28c	8-76
Removal	8-28a	8-75
Power steering pump pressure relief valve (serial number 196901 and above):		
Installation	8-23.2b	8-64.4
Removal	8-23.2a	8-64.4
Power steering reservoir and bracket (P/N 94252A):		
Installation	8-29b	8-80
Removal	8-29a	8-78
Power steering reservoir filter (P/N 94252A):		
Installation	8-30b	8-82
Removal	8-30a	8-82
Power steering system bleeding (RCSK 18330)	8-27	8-74.1
Power steering system bleeding (P/N 94252A)	8-27.1	8-74.2
Power steering system hydraulic control valve:		
Back flush procedure	8-25b	8-68
Inspection	8-25a	8-70
Installation	8-25d	8-70
Removal	8-25c	8-68
Power steering vent line:		
Installation	12-48b	12-83
Removal	12-48a	12-83
Precision Lightweight Global Positioning Receiver (PLGR) mounting bracket:		
Installation	12-17.1b	12-30.2
Removal	12-17.1a	10-30.2
Preparation for shipment	1-4	1-1
Preparation for storage or shipment:		
Administrative storage	13-2	13-1
Cleaning	13-6	13-2
General storage and shipping information	13-5	13-2
Inspections, stowage, and inventory	13-7	13-2
Lubrication	13-9	13-3
Records and reports	13-10	13-3
Repair, painting, and preservation	13-8	13-3
Scope	13-1	13-1
Security	13-3	13-1
Special packaging and shipping requirements	13-4	13-1

INDEX (Cont'd)

	Para.	Page
P (Cont'd)		
Pressure limiter valve, brake:		
Installation	7-8b	7-28
Removal	7-8a	7-28
Preventive maintenance checks and services:		
General	2-8	2-2
General service and inspection procedures	2-11	2-3
Intervals	2-9	2-3
Reporting repairs	2-10	2-3
Specific PMCS procedures	2-12	2-4
Principles of operation, general	1-16	1-23
Principles of operation reference index:		
200-ampere umbilical power cable	1-30	1-40
Battery system operation	1-23	1-30
Cooling system operation	1-20	1-26
Drivetrain operation	1-18	1-24
Fuel system operation	1-19	1-25
Generating system operation	1-22	1-29
M1114 air-conditioning system operation	1-29	1-39
Service brake system operation	1-26	1-33
Service/parking brake system operation	1-25	1-32
Starting system operation	1-21	1-28
Steering control system operation	1-27	1-35
Suspension system operation	1-28	1-37
Windshield wiper/washer system operation	1-24	1-31
Propeller shaft assembly, front:		
Assembly	6-3c	6-7
Cleaning and inspection	6-3b	6-6
Disassembly	6-3a	6-6
Inspection	6-2b	6-2
Installation	6-2c	6-4
Removal	6-2a	6-2
Propeller shaft, front:		
Assembly	21-8b	21-19
Disassembly	21-8a	21-19
Propeller shaft, rear:		
Inspection	6-4b	6-8
Installation	6-4c	6-8
Removal	6-4a	6-8
Propeller shafts, axles, and suspension maintenance task summary	21-2	21-1
Propeller shafts maintenance task summary	6-1	6-1
P (Cont'd)		
Proportioning valve and differential valve:		
Differential valve installation	7-10b	7-32
Differential valve removal	7-10a	7-32
Proportioning valve installation	7-10d	7-33
Proportioning valve removal	7-10c	7-32
Prop rod and bracket, hood:		
Assembly	10-8d	10-12
Disassembly	10-8b	10-12
Inspection	10-8c	10-12
Installation	10-8e	10-13
Removal	10-8a	10-12
Protective control box:		
Installation	4-4b	4-6
Removal	4-4a	4-6
Protective control box tests	2-34	2-213
Pulley, alternator:		
Installation	4-2b	4-2
Removal	4-2a	4-2
Pulley, alternator clutch (serial numbers 196901 and above):		
Installation	4-2.1b	4-2.2
Removal	4-2.1a	4-2.2
Pulley, crankshaft:		
Installation	15-6b	15-14
Removal	15-6a	15-14
Pulley, power steering pump and:		
Installation	8-23b	8-64
Removal	8-23a	8-64
Pulley, water pump:		
Installation	3-77b	3-133
Removal	3-77a	3-133
Pull strap, door seal and:		
Door pull strap installation	11-11d	11-22
Door pull strap removal	11-11c	11-22
Door seal installation	11-11b	11-22
Door seal removal	11-11a	11-22
Pump and pulley, power steering:		
Installation	8-23b	8-64
Removal	8-23a	8-64
Pump and pulley, power steering (serial numbers 196901 and above):		
Installation	8-23.1b	8-64.2
Removal	8-23.1a	8-64.2
Pump assembly, windshield washer reservoir and:		
Inspection	10-64a.1	10-108
Installation	10-64b	10-108
Removal	10-64a	10-108
Pushrods, rocker arm shafts and:		
Installation	15-8b	15-17
Removal	15-8a	15-17

INDEX (Cont'd)

	Para.	Page
R		
Radial tire, wheel, and rubber runflat:		
Assembly	8-4d	8-13
Disassembly	8-4a	8-8
Inspection and cleaning	8-4b	8-11
Repair	8-4c	8-12
Radiator and fan shroud assembly:		
Cleaning and inspection	3-62b	3-114
Installation	3-62c	3-114
Removal	3-62a	3-112
Radiator and oil cooler maintenance	17-3	17-1
Radiator front mount bracket:		
Installation	9-5b	9-5
Removal	9-5a	9-5
Radiator hose, lower:		
Installation	3-72b	3-128
Removal	3-72a	3-128
Radiator inlet hose:		
Installation	3-70b	3-126
Removal	3-70a	3-126
Radiator lower tube assembly:		
Installation	3-71b	3-127
Removal	3-71a	3-127
Radiator support:		
Installation	3-64b	3-119
Removal	3-64a	3-119
Radiator tube hose, surge tank-to-lower:		
Installation	3-74b	3-130
Removal	3-74a	3-130
Radio rack and mounting brackets:		
Installation	12-17b	12-30
Removal	12-17a	12-28
Radius rod:		
Installation	6-22b	6-50.1
Removal	6-22a	6-50.1
Rear antenna cables:		
Installation	12-24b	12-43
Removal	12-24a	12-40
Rear antenna mounting bracket:		
Installation	12-22b	12-38
Removal	12-22a	12-38
Rear band and selective thrust washer:		
Inspection	28-7	28-25
Rear bumper:		
Installation	9-7b	9-8
Removal	9-7a	9-8
Rear bumper brace:		
Installation	9-6b	9-6
Removal	9-6a	9-6
R (Cont'd)		
Rear bumper inner mounting bracket:		
Installation	9-8b	9-10
Removal	9-8a	9-10
Rear bumper mounting bracket and tiedown bracket:		
Installation	24-22b	24-40
Removal	24-22a	24-40
Rear cargo door access:		
Lifting	11-90a	11-160
Lowering	11-90b	11-160
Rear cargo door access task summary	11-89	11-159
Rear composite light assembly:		
Installation	4-57b	4-96
Removal	4-57a	4-96
Rear composite light lamp:		
Installation	4-55b	4-93
Removal	4-55a	4-93
Rear crossmember bracket and rear body mount bracket:		
Installation	24-21b	24-38
Removal	24-21a	24-38
Rear crossmember, rear suspension:		
Installation	24-19b	24-34
Removal	24-19a	24-34
Rear door and hinge:		
Installation	11-2.1b	11-4.2
Removal	11-2.1a	11-4.2
Rear door striker nut plate		
Installation	25-13.5b	25-36.38
Removal	25-13.5a	25-36.38
Rear door striker tapping plate		
Installation	25-13.6b	25-36.40
Removal	25-13.6a	25-36.40
Rear dual service/parking brake adjustment	7-19	7-54
Rear dual service/parking brake caliper:		
Cleaning and inspection	7-15b	7-44
Installation	7-15c	7-44
Removal	7-15a	7-42
Rear dual service/parking brake pad:		
Cleaning and inspection	7-14b	7-40
Installation	7-14c	7-40
Removal	7-14a	7-38
Rear dual service/parking brake rod:		
Installation	7-18b	7-52
Removal	7-18a	7-52

INDEX (Cont'd)

	Para.	Page
R (Cont'd)		
Rear dual service/parking brake system maintenance task summary	7-13	7-37
Rear fairlead roller bracket assembly:		
Installation	12-35b	12-67
Removal	12-35a	12-67
Rear-front tiedown bracket:		
Installation	24-14b	24-18
Removal	24-14a	24-18
Rear geared hub vent line:		
Installation	6-15b	6-40
Removal	6-15a	6-40
Rear heat shield:		
Installation	3-52b	3-97
Removal	3-52a	3-97
Rear heat shield, right:		
Installation	3-58b	3-106
Removal	3-58a	3-106
Rear heater assembly:		
Inspection	10-75.1b	10-128.3
Installation	10-75.1c	10-128.4
Removal	10-75.1a	10-128.2
Rear heater hoses and tubes:		
Inspection	10-75.2b	10-128.9
Installation	10-75.2c	10-128.10
Removal	10-75.2a	10-128.6
Rear heater line guard and cover:		
Inspection	10-88.1b	10-150.2
Installation	10-88.1c	10-150.2
Removal	10-88.1a	10-150.2
Rear heater manifolds:		
Inspection	10-88.2b	10-150.4
Installation	10-88.2c	10-150.6
Removal	10-88.2a	10-150.4
Rear parking brake caliper:		
Assembly	22-5d	22-10
Cleaning	22-5b	22-9
Inspection	22-5c	22-8
Disassembly	22-5a	22-8
Rear propeller shaft:		
Inspection	6-4b	6-8
Installation	6-4c	6-8
Removal	6-4a	6-8
Rear-rear tiedown bracket:		
Installation	24-12b	24-16
Removal	24-12a	24-16
Rear seat floor insulation:		
Installation	10-34b	10-60
Removal	10-34a	10-60

	Para.	Page
R (Cont'd)		
Rear servo repair (1995):		
Assembly	28-16d	28-58
Cleaning	28-16b	28-58
Disassembly	28-16a	28-58
Inspection	28-16c	28-58
Rear servo repair (1996-1998):		
Assembly	28-16.1d	28-58.2
Cleaning	28-16.1b	28-58.2
Disassembly	28-16.1a	28-58.2
Inspection	28-16.1c	28-58.2
Rear suspension front cross-member:		
Installation	24-18b	24-32
Removal	24-18a	24-30
Rear suspension rear cross-member:		
Installation	24-19b	24-34
Removal	24-19a	24-34
Rear upper control arm bracket:		
Installation	24-11b	24-14
Removal	24-11a	24-14
Rearview mirror:		
Assembly	10-68d	10-118
Disassembly	10-68c	10-118
Inspection	10-68b	10-116
Installation	10-68e	10-118
Removal	10-68a	10-116
Rearview mirror bracket, driver's:		
Inspection	10-69a.1	10-120
Installation	10-69b	10-120
Removal	10-69a	10-120
Rear wheel toe-out alignment:		
Preliminary inspection	8-10a	8-30
Toe-out adjustment	8-10c	8-34
Toe-out check	8-10b	8-32
Rear winch:		
Installation	12-33b	12-64
Removal	12-33a	12-63
Rear winch, 10,500 lb hydraulic (M1114):		
Brackets installation	12-36.1c	12-68.2
Brackets removal	12-36.1b	12-68.2
Winch installation	12-36.1d	12-68.2
Winch removal	12-36.1a	12-68.1
Rear, 10,500 lb hydraulic winch cable replacement (M1114):		
Installation	12-36.2b	12-68.4
Removal	12.36.2a	12-68.4
Rear winch, 10,500 lb hydraulic winch controller plug (M1114):		
Installation	12-36.6b	12-36.28
Removal	12-36.6a	12-36.26

INDEX (Cont'd)

	Para.	Page
R (Cont'd)		
Rear winch, 10,500 lb hydraulic fairlead roller bracket assembly (M1114):		
Installation	12-36.3b	12-68.6
Removal	12-36.3a	12-68.6
Rear winch, 10,500 lb rear hydraulic hose replacement (M1114):		
Installation	12-36.4b	12-68.14
Removal	12-36.4a	12-68.8
Rear winch clutch cable:		
Installation	12-36b	12-68
Removal	12-36a	12-68
Rear winch vent line:		
Installation	12-34b	12-66
Removal	12-34a	12-66
Records, maintenance forms, reports, and	1-2	1-1
References, appendix A		A-1
Regulator, 200-ampere dual voltage:		
Installation	4-8b	4-18
Removal	4-8a	4-18
Regulator, 400-ampere dual voltage:		
Installation	4-8.1b	4-18.2
Removal	4-8.1a	4-18.2
Regulator cable, 12-volt:		
Installation	4-70b	4-120
Removal	4-70a	4-118
Reinforcement, shelter support:		
Installation	11-76b	11-137
Removal	11-76a	11-137
Relay, transmission:		
Installation	4-44b	4-72
Removal	4-44a	4-72
Relief valve cartridge, power steering:		
Inspection	8-28b	8-76
Installation	8-28c	8-76
Removal	8-28a	8-75
Repair:		
General maintenance	2-16	2-32
Repair parts, special tools, Test, Measurement, Diagnostic Equipment (TMDE), and support equipment:		
Common tools and equipment	2-1	2-1
Fabricated tools	2-3	2-1
Repair parts	2-4	2-1
Special tools, TMDE, and support equipment	2-2	2-1
Reporting Equipment Improvement Recommendations (EIR)	1-5	1-1
R (Cont'd)		
Reservoir and bracket, power steering (P/N 94252A):		
Installation	8-29b	8-80
Removal	8-29a	8-78
Reservoir and pump assembly, windshield washer:		
Inspection	10-64a.1	10-108
Installation	10-64b	10-108
Removal	10-64a	10-108
Resilient mount, roof panel and:		
Cleaning and inspection	25-3b	25-2
Installation	25-3c	25-2
Removal	25-3a	25-2
Resistor assembly, heater fan motor:		
Installation	10-75b	10-128
Removal	10-75a	10-127
Retainer, intermediate steering shaft close-off:		
Installation	8-22b	8-62
Removal	8-22a	8-62
Retention bracket, windshield:		
Installation	10-29b	10-54
Removal	10-29a	10-54
Rifle mounting clamp:		
Installation	11-67b	11-128
Removal	11-67a	11-128
Rifle support:		
Inspection	11-66a.1	11-126
Installation	11-66b	11-126
Removal	11-66a	11-126
Right airlift bracket and front upper control arm brackets:		
Installation	24-8b	24-8
Removal	24-8a	24-8
Right cylinder head:		
Installation	15-5c	15-12
Removal	15-5a	15-12
Repair	15-5b	15-12
Right defroster nozzle:		
Installation	10-84b	10-146
Removal	10-84a	10-146
Right engine mount bracket:		
Installation	24-9b	24-10
Removal	24-9a	24-10
Right exhaust manifold heat shield:		
Installation	3-56b	3-102
Removal	3-56a	3-102
Right front body mount bracket:		
Installation	32-5b	32-11
Removal	32-5a	32-11
Right front cowl insulation:		
Inspection	10-32b	10-58
Installation	10-32c	10-58
Removal	10-32a	10-58

INDEX (Cont'd)

	Para.	Page
R (Cont'd)		
Right front floor panel repair:		
Battery tray panel and right front floor panel installation	33-13i	33-84
Insert panel and right front floor panel installation	33-13j	33-86
Metal strip A and insert panel assembly	33-13d	33-74
Metal strip B and insert panel assembly	33-13e	33-76
Metal strip C and insert panel assembly	33-13f	33-78
Metal strips fabrication	33-13b	33-70
Right front floor panel and battery tray drilling	33-13g	33-80
Right front floor panel and insert panel drilling	33-13h	33-82
Right front floor panel removal	33-13c	33-72
Right front insert panel fabrication	33-13a	33-68
Right front underbody armor:		
Inspection	25-13.4b	25-36.35
Installation	25-13.4c	25-36.36
Removal	25-13.4a	25-36.34
Right front underbody armor:		
New passenger side footwell inner armor and inner/outer armor reinforcement installation:	25-13.3c	25-36.24
New passenger side footwell outer armor installation	25-13.3b	25-36.22
New passenger side footwell upper armor installation	25-13.3a	25-36.21
New right front underbody armor installation	25-13.3d	25-36.26
Right fuel injection lines bracket:		
Installation	3-40b	3-79
Removal	3-40a	3-79
Right intake manifold:		
Installation	15-17b	15-34
Removal	15-17a	15-34
Right intermediate body mount bracket:		
Installation	32-6b	32-12
Removal	32-6a	32-12
Right parking brake cable:		
Installation	7-16b	7-46
Removal	7-16a	7-46
Right rear door striker reinforcement:		
Installation	11-12.1b	11-24.2
Removal	11-12.1a	11-24.2

	Para.	Page
R (Cont'd)		
Right rear floor panel repair:		
Insert panel and right rear floor panel installation	33-14k	33-104
Metal strip C and insert panel assembly	33-14g	33-99
Metal strip D and insert panel assembly	33-14i	33-101
Metal strip E and insert panel assembly	33-14h	33-100
Metal strips fabrication	33-14c	33-92
Reinforcement strip A and insert panel assembly	33-14e	33-97
Reinforcement strip B and insert panel assembly	33-14f	33-98
Reinforcement strips fabrication	33-14b	33-90
Right rear floor panel removal	33-14d	33-94
Right rear floor panel and insert panel drilling	33-14j	33-102
Right rear insert panel fabrication	33-14a	33-88
Right rear heat shield:		
Installation	3-58b	3-106
Removal	3-58a	3-106
Right rear underbody armor:		
Inspection	11-39b	11-78
Installation	11-39c	11-80
Removal	11-39a	11-78
Right rocker arm cover:		
Installation	15-12b	15-26
Removal	15-12a	15-26
Right side A-pillar armor:		
Inspection	11-33b	11-60
Installation	11-33c	11-60
Removal	11-33a	11-60
Right side armor, A-beam:		
Installation	11-43b	11-88
Removal	11-43a	11-88
Right side rocker panel armor and inside protection plate:		
Inspection	11-35b	11-64
Installation	11-35c	11-64
Removal	11-35a	11-64
Rim stud, inner:		
Cleaning and inspection	8-7b	8-20
Installation	8-7c	8-20
Removal	8-7a	8-19
Ring, tiedown:		
Installation	9-4b	9-4
Removal	9-4a	9-4
Road test, transmission	5-14	5-31

INDEX (Cont'd)

	Para.	Page
R (Cont'd)		
Rocker arm cover, left:		
Installation	15-11b	15-24
Removal	15-11a	15-24
Rocker arm cover, right:		
Installation	15-12b	15-26
Removal	15-12a	15-26
Rocker arm shafts and pushrods:		
Installation	15-8b	15-17
Removal	15-8a	15-17
Rod, radius:		
Installation	6-22b	6-50.1
Removal	6-22a	6-50.1
Rod, tie:		
Assembly	8-13c	8-38
Disassembly	8-13b	8-38
Installation	8-13d	8-38
Removal	8-13a	8-37
Roof panel and resilient mount:		
Cleaning and inspection	25-3b	25-2
Installation	25-3c	25-2
Removal	25-3a	25-2
Rotary switch:		
Installation	4-10b	4-20
Removal	4-10a	4-20
Rotor, brake:		
Checking lateral runout	22-3b	22-2
Checking thickness variation	22-3c	22-2
Inspection	22-3a	22-2
Refinishing	22-3d	22-2
Rotor, service brake:		
Installation	7-12b	7-36
Removal	7-12a	7-36
Rpm sensor, engine:		
Installation	4-37b	4-64
Removal	4-37a	4-64
Rubber runflat, radial tire, wheel and:		
Assembly	8-4d	8-13
Disassembly	8-4a	8-8
Inspection and cleaning	8-4b	8-11
Repair	8-4c	8-12
Runflat compressor (P/N 528236) belt:		
Installation	8-6b	8-18
Removal	8-6a	8-18
Runflat compressor (P/N J39250) belt:		
Installation	8-5b	8-17
Removal	8-5a	8-17
Run-in, engine:		
In-chassis run-in	15-24	15-46
Scope of manual	1-1	1-1

	Para.	Page
S		
Screen, front grille:		
Installation	10-15b	10-24
Removal	10-15a	10-24
Seal, airlift bracket-to-hood:		
Installation	10-55b	10-90
Removal	10-55a	10-90
Seal, differential output shaft:		
Installation	21-3b	21-2
Removal	21-3a	21-2
Seal, door window:		
Installation	11-10b	11-20
Removal	11-10a	11-20
Seal, geared hub input:		
Installation	6-10b	6-28
Removal	6-10a	6-28
Seal, geared hub spindle:		
Installation	6-11b	6-32
Removal	6-11a	6-30
Seal, outer hood:		
Installation	10-10b	10-19
Removal	10-10a	10-19
Seal, pinion:		
Installation	21-4b	21-4
Removal	21-4a	21-4
Seal, turret armor and:		
Installation	11-52b	11-103
Removal	11-52a	11-103
Seal, turret hatch hinge:		
Installation	11-62.1b	11-120.2
Removal	11-62.1a	11-120.2
Sealed lower converter housing cover:		
Inspection	5-11b	5-26
Installation	5-11c	5-26
Removal	5-11a	5-26
Sealed upper converter housing cover (2-piece):		
Inspection	5-12b	5-28
Installation	5-12c	5-28
Removal	5-12a	5-28
Seat assembly, companion:		
Assembly	10-44b	10-74
Disassembly	10-44a	10-74
Seat assembly, companion, and battery box cover:		
Installation	10-43b	10-73
Removal	10-43a	10-73
Seat assembly, driver's:		
Assembly	10-41b	10-70
Disassembly	10-41a	10-70
Installation	10-40b	10-69
Removal	10-40a	10-69

INDEX (Cont'd)

	Para.	Page
S (Cont'd)		
Seatbelt brackets, three point:		
Installation	10-46b	10-77
Removal	10-46a	10-77
Seatbelt, three point:		
Front seatbelt bracket inspection	10-47b	10-78
Front seatbelt installation	10-47c	10-79
Front seatbelt removal	10-47a	10-78
Rear seatbelt bracket inspection	10-47e	10-80
Rear seatbelt installation	10-47f	10-80
Rear seatbelt removal	10-47d	10-80
Seat, passenger:		
Assembly	10-45b	10-76
Disassembly	10-45a	10-76
Installation	10-45.1b	10-76.1
Removal	10-45.1a	10-76.1
Selective thrust washer, rear band and:		
Inspection	28-7	28-25
Selector valve:		
Installation	12-43b	12-78
Removal	12-43a	12-77
Sending unit, engine temperature:		
Installation	4-28b	4-51
Removal	4-28a	4-51
Sending unit, fuel level:		
Installation	4-32b	4-56
Removal	4-32a	4-56
Sending unit, oil pressure:		
Inspection	4-29b	4-52
Installation	4-29c	4-52
Removal	4-29a	4-52
Sensor cup vent line:		
Installation	12-47b	12-82
Removal	12-47a	12-82
Sensor, engine rpm:		
Installation	4-37b	4-64
Removal	4-37a	4-64
Sensor, throttle position (TP):		
Adjustment	4-46c	4-76
Installation	4-46b	4-76
Removal	4-46a	4-76
Serpentine drivebelt (serial numbers 196901 and above):		
Alignment	3-81.1c	3-142.6
Installation	3-81.1b	3-142.4
Removal	3-81.1a	3-142.4
Serpentine drivebelt (serial numbers 196901 and below):		
Alignment	3-81c	3-142.2
Installation	3-81b	3-142
Removal	3-81a	3-142

	Para.	Page
S (Cont'd)		
Service and troubleshooting instructions:		
Common tools and equipment	2-1	2-1
Fabricated tools	2-3	2-1
Repair parts	2-4	2-1
Special tools, TMDE, and support equipment	2-2	2-1
Service brake caliper:		
Cleaning and inspection	7-4b	7-12
Installation	7-4c	7-12
Removal	7-4a	7-10
Service brake pad:		
Cleaning and inspection	7-3b	7-8
Installation	7-3c	7-8
Removal	7-3a	7-6
Service brake pedal:		
Installation	7-9b	7-30
Removal	7-9a	7-30
Service brake rotor:		
Installation	7-12b	7-36
Removal	7-12a	7-36
Service brake system:		
Maintenance task summary (DS)	22-2	22-1
Maintenance task summary (unit)	7-1	7-1
Service brake system bleeding:		
Manual bleeding	7-2b	7-4
Master cylinder bleeding	7-2c	7-4
Pressure bleeding	7-2a	7-2
Service brake system operation	1-26	1-33
Service headlight and blackout drive light electrical connector and grommet:		
Installation	4-65b	4-106
Removal	4-65a	4-106
Service headlight assembly:		
Installation	4-50b	4-84
Removal	4-50a	4-84
Service headlight lamp:		
Adjustment	4-49c	4-83
Installation	4-49b	4-82
Removal	4-49a	4-82
Service/parking brake adjustment, rear dual	7-19	7-54
Service/parking brake caliper, rear dual:		
Cleaning and inspection	7-15b	7-44
Installation	7-15c	7-44
Removal	7-15a	7-42

INDEX (Cont'd)

	Para.	Page
S (Cont'd)		
Service/parking brake pad, rear dual:		
Cleaning and inspection	7-14b	7-40
Installation	7-14c	7-40
Removal	7-14a	7-38
Service/parking brake rod, rear dual:		
Installation	7-18b	7-52
Removal	7-18a	7-52
Service/parking brake system operation	1-25	1-32
Service upon receipt:		
General	2-5	2-1
General inspection and servicing instructions	2-6	2-2
Specific inspection and servicing instructions	2-7	2-2
Servo advance seal:		
Installation	16-5b	16-6
Removal	16-5a	16-6
Servo, front:		
Assembly	28-15d	28-57
Cleaning	28-15b	28-57
Disassembly	28-15a	28-57
Inspection	28-15c	28-57
Servo, rear (1995):		
Assembly	28-16d	28-58
Cleaning	28-16b	28-58
Disassembly	28-16a	28-58
Inspection	28-16c	28-58
Servo, rear (1996-1998)		
Assembly	28-16.1d	28-58.2
Cleaning	28-16.1b	28-58.2
Disassembly	28-16.1a	28-58.2
Inspection	28-16.1c	28-58.2
Shaft assembly, front propeller:		
Assembly	6-3c	6-7
Cleaning and inspection	6-3b	6-6
Disassembly	6-3a	6-6
Inspection	6-2b	6-2
Installation	6-2c	6-4
Removal	6-2a	6-2
Shaft, intermediate steering:		
Installation	8-19b	8-54
Removal	8-19a	8-54
Shaft, rear propeller:		
Inspection	6-4b	6-8
Installation	6-4c	6-8
Removal	6-4a	6-8
Shelter:		
Installation	11-78b	11-140
Removal	11-78a	11-140
S (Cont'd)		
Shelter carrier body maintenance task summary	11-72	11-133
Shelter carrier tailgate:		
Installation	11-75b	11-136
Removal	11-75a	11-136
Shelter carrier tailgate bracket:		
Installation	11-74b	11-135
Removal	11-74a	11-135
Shelter carrier tailgate chain:		
Assembly	11-77c	11-138
Disassembly	11-77b	11-138
Installation	11-77d	11-138
Removal	11-77a	11-138
Shelter mounting bracket:		
Installation	11-73b	11-134
Removal	11-73a	11-134
Shelter support assembly:		
Installation	11-79b	11-142
Removal	11-79a	11-142
Shelter support reinforcement:		
Installation	11-76b	11-137
Removal	11-76a	11-137
Shield, rear heat:		
Installation	3-52b	3-97
Removal	3-52a	3-97
Shift controls housing assembly:		
Assembly	5-8b	5-20
Disassembly	5-8a	5-20
Installation	5-7b	5-18
Removal	5-7a	5-18
Shift rod, transfer case:		
Adjustment	5-16c	5-32
Installation	5-16b	5-32
Removal	5-16a	5-32
Shift rod, transmission:		
Adjustment	5-9c	5-22
Installation	5-9b	5-22
Removal	5-9a	5-22
Shipment, preparation for	1-4	1-1
Shock absorber:		
Installation	6-28b	6-64
Removal	6-28a	6-62
Shroud shield assembly, airlift-to-:		
Installation	3-63b	3-118
Removal	3-63a	3-118
Shunt:		
Installation	4-78b	4-138
Removal	4-78a	4-138
Shutoff solenoid, fuel injection pump:		
Inspection	16-8b	16-16
Installation	16-8c	16-16
Removal	16-8a	16-16

INDEX (Cont'd)

	Para.	Page
S (Cont'd)		
Shutoff valve, heater:		
Installation	10-72b	10-124
Removal	10-72a	10-124
Side footwear inner armor, passenger:		
Installation	25-11b	25-30
Removal	25-11a	25-30
Side footwear outer armor, passenger:		
Installation	25-10b	25-28
Removal	25-10a	25-28
Side hood stop:		
Installation	10-11b	10-20
Removal	10-11a	10-20
Side marker light assembly:		
Installation	4-56b	4-94
Removal	4-56a	4-94
Side upper cowl liner, passenger:		
Installation	25-13b	25-36
Removal	25-13a	25-36
Signal control cancelling ring, directional:		
Installation	4-64b	4-105
Removal	4-64a	4-105
Signal control, directional:		
Installation	4-63b	4-104
Removal	4-63a	4-104
Signal control indicator lamp, directional:		
Installation	4-62b	4-103
Removal	4-62a	4-103
Signal flasher, directional:		
Installation	4-61b	4-102
Removal	4-61a	4-102
Slave receptacle and cable:		
Inspection	4-76b	4-132
Installation	4-76c	4-132
Removal	4-76a	4-132
Sling and hook, gunner's:		
Installation	11-56b	11-109
Removal	11-56a	11-109
Soft top:		
Inspection and cleaning	10-93a	10-156
Soft top material repair	10-93b	10-156
Soft top window repair	10-93c	10-156
Soft top window zipper repair (temporary)	10-93d	10-157
Soft top door adjustment	10-92	10-154
Soft top door hinge:		
Installation	10-91b	10-153
Removal	10-91a	10-153
Soft top door striker:		
Installation	10-94b	10-158
Removal	10-94a	10-158
S (Cont'd)		
Special purpose kits (DS) maintenance task summary	26-2	26-1
Special tools, TMDE, and support equipment	2-2	2-1
Speedometer cable:		
Installation	4-18b	4-38
Removal	4-18a	4-38
Speedometer driven gear:		
Installation	5-17b	5-34
Removal	5-17a	5-34
Speedometer/odometer:		
Installation	4-17b	4-36
Removal	4-17a	4-36
Splash shield access cover, engine left:		
Installation	10-25b	10-46
Removal	10-25a	10-46
Splash shield, left, engine:		
Assembly	10-23c	10-40
Disassembly	10-23b	10-40
Installation	10-23d	10-41
Removal	10-23a	10-38
Splash shield, right, engine:		
Assembly	10-24c	10-44
Disassembly	10-24b	10-42
Installation	10-24d	10-44
Removal	10-24a	10-42
Splash shield support bracket:		
Installation	24-4b	24-2
Removal	24-4a	24-2
Spring, coil:		
Installation	6-27b	6-61
Removal	6-27a	6-60
Spring seat:		
Installation	24-5b	24-3
Removal	24-5a	24-3
Stabilizer bar:		
Installation	6-20b	6-49
Removal	6-20a	6-49
Stabilizer bar link:		
Installation	6-21b	6-50
Removal	6-21a	6-50
Startability tests	2-23	2-45
Starter:		
Assembly	18-4d	18-18
Bench testing and adjustment	18-4e	18-24
Cleaning	18-4b	18-18
Disassembly	18-4a	18-12
Inspection	18-4c	18-18
Installation	4-11b	4-24
Removal	4-11a	4-22
Starter and starting control system maintenance task summary	4-9	4-20
Starter circuit tests	2-36	2-247

INDEX (Cont'd)

	Para.	Page
S (Cont'd)		
Starter power cables:		
Installation	4-72b	4-124
Removal	4-72a	4-122
Starting system operation	1-21	1-28
Steering column:		
Installation	8-18b	8-52
Removal	8-18a	8-50
Steering components maintenance task summary	8-11	8-35
Steering control system operation.	1-27	1-35
Steering gear:		
Adjustment	23-5h	23-24
Assembly	23-5g	23-18
Cleaning	23-5b	23-14
Disassembly	23-5a	23-8
Housing group inspection and repair	23-5c	23-14
Installation	8-20b	8-58
Pitman shaft inspection and repair	23-5d	23-14
Rack piston group inspection and repair	23-5e	23-16
Removal	8-20a	8-56
Valve and adjuster group inspection and repair	23-5f	23-16
Steering gear leak test, power steering pump and	23-4	23-6
Steering pump, power:		
Assembly	23-3d	23-4
Cleaning	23-3b	23-4
Disassembly	23-3a	23-2
Inspection	23-3c	23-4
Steering shaft close-off and retainer, intermediate:		
Installation	8-22b	8-62
Removal	8-22a	8-62
Steering shaft, intermediate:		
Installation	8-19b	8-54
Removal	8-19a	8-54
Steering shaft U-joint:		
Installation	8-21b	8-60
Removal	8-21a	8-60
Steering stop:		
Adjustment	6-17c	6-44
Installation	6-17b	6-44
Removal	6-17a	6-44
Steering system:		
Maintenance task summary (DS)	23-2	23-1
Maintenance task summary (GS)	31-2	31-1
Steering system tests	2-42	2-433
S (Cont'd)		
Steering wheel:		
Installation	8-12b	8-36
Removal	8-12a	8-36
Steering wheel lock:		
Installation	10-48b	10-82
Removal	10-48a	10-82
STE/ICE-R test procedures	2-46	2-489
STE/ICE-R wiring harness:		
Installation	18-5b	18-30
Removal	18-5a	18-28
Stop, center hood:		
Installation	10-12b	10-21
Removal	10-12a	10-21
Stop guide, center hood:		
Installation	10-14b	10-23
Removal	10-14a	10-23
Stoplight/torque converter clutch brake switch:		
Adjustment	4-60c	4-100
Installation	4-60b	4-100
Removal	4-60a	4-100
Stop ring, turret bearing and:		
Adjustment	11-57d	11-111.2
Inspection	11-57b	11-110
Installation	11-57c	11-110
Removal	11-57a	11-110
Stop, side hood:		
Installation	10-11b	10-20
Removal	10-11a	10-20
Stop, steering:		
Adjustment	6-17c	6-44
Installation	6-17b	6-44
Removal	6-17a	6-44
Storage or shipment, preparation for:		
Administrative storage	13-2	13-1
Cleaning	13-6	13-2
General storage and shipping information	13-5	13-2
Inspections, stowage, and inventory	13-7	13-2
Lubrication	13-9	13-3
Records and reports	13-10	13-3
Repair, painting, and preservation	13-8	13-3
Scope	13-1	13-1
Security	13-3	13-1
Special packaging and shipping requirements	13-4	13-1
Stowage pedestal and gunner's platform:		
Inspection	11-71a.1	11-132
Installation	11-71b	11-132
Removal	11-71a	11-132

INDEX (Cont'd)

	Para.	Page
S (Cont'd)		
Stowage strap and bracket, tool kit:		
Inspection	10-37b	10-64
Installation	10-37c	10-64
Removal	10-37a	10-64
Strap, footman loop and:		
Inspection	10-13b	10-22
Installation	10-13c	10-22
Removal	10-13a	10-22
Strap, jack retaining:		
Installation	10-9.1b	10-18.1
Removal	10-9.1a	10-18.1
Straps, camouflage screen stowage:		
Installation	10-36b	10-63
Removal	10-36a	10-63
Striker, door:		
Installation	11-12b	11-24
Removal	11-12a	11-24
Stud, inner rim:		
Cleaning and inspection	8-7b	8-20
Installation	8-7c	8-20
Removal	8-7a	8-19
Stud, power feed-through:		
Installation	4-69b	4-116
Removal	4-69a	4-116
Stud, wheel:		
Installation	6-13b	6-38
Removal	6-13a	6-38
Sun visor:		
Inspection	10-70b	10-121
Installation	10-70c	10-121
Removal	10-70a	10-121
Supply and return lines, fuel tank:		
Installation	3-26b	3-52
Removal	3-26a	3-52
Support assembly, shelter:		
Installation	11-79b	11-142
Removal	11-79a	11-142
Support, center:		
Assembly	28-8d	28-35
Cleaning	28-8b	28-32
Disassembly	28-8a	28-32
Inspection	28-8c	28-32
Support, radiator:		
Installation	3-64b	3-119
Removal	3-64a	3-119
Support reinforcement, shelter:		
Installation	11-76b	11-137
Removal	11-76a	11-137
S (Cont'd)		
Support, rifle:		
Inspection	11-66a.1	11-126
Installation	11-66b	11-126
Removal	11-66a	11-126
Surge tank:		
Installation	3-65b	3-120
Removal	3-65a	3-120
Surge tank overflow hose:		
Installation	3-75b	3-131
Removal	3-75a	3-131
Surge tank-to-lower radiator tube hose:		
Installation	3-74b	3-130
Removal	3-74a	3-130
Surge tank-to-radiator vent hose:		
Installation	3-66b	3-121
Removal	3-66a	3-121
Surge tank-to-water crossover vent hose:		
Installation	3-67b	3-122
Removal	3-67a	3-122
Suspension alignment instructions:		
Caster and camber adjustment	34-3b	34-2
Caster and camber check	34-3a	34-1
Toe check and adjustment	34-3c	34-3
Suspension brace, front:		
Installation	24-6b	24-4
Removal	24-6a	24-4
Suspension crossmember:		
Inspection	24-20a	24-36
Repair	24-20b	24-36
Suspension, front crossmember, front:		
Installation	24-16b	24-24
Removal	24-16a	24-24
Suspension, front crossmember, rear:		
Installation	24-18b	24-32
Removal	24-18a	24-30
Suspension:		
Maintenance task summary (GS)	34-1	34-1
Maintenance task summary (unit)	6-19	6-48
Suspension, propeller shafts, axles, and maintenance task summary	21-2	21-1
Suspension, rear crossmember, front:		
Installation	24-17b	24-28
Removal	24-17a	24-26

INDEX (Cont'd)

	Para.	Page
S (Cont'd)		
Suspension rear crossmember, rear:		
Installation	24-19b	24-34
Removal	24-19a	24-34
Suspension system operation	1-28	1-37
Switch, backup light:		
Installation	4-36b	4-62
Removal	4-36a	4-62
Switch, cold-advance:		
Installation	4-31b	4-55
Removal	4-31a	4-55
Switch, fan cut-off:		
Installation	4-42b	4-69
Removal	4-42a	4-69
Switch, fan temperature:		
Installation	4-34b	4-60
Removal	4-34a	4-60
Switch, headlight beam selector, and bracket:		
Installation	4-59b	4-99
Removal	4-59a	4-99
Switch, heater fan:		
Installation	10-73b	10-125
Removal	10-73a	10-125
Switch, horn:		
Installation	4-24b	4-47
Removal	4-24a	4-47
Switch, main light:		
Installation	4-58b	4-98
Removal	4-58a	4-98
Switch, neutral start:		
Installation	5-6b	5-16
Removal	5-6a	5-16
Switch, parking brake:		
Installation	4-23b	4-46
Removal	4-23a	4-46
Switch, rotary:		
Installation	4-10b	4-20
Removal	4-10a	4-20
Switch, torque converter clutch brake stoplight/:		
Adjustment	4-60c	4-100
Installation	4-60b	4-100
Removal	4-60a	4-100
Switch, transfer case indicator:		
Installation	4-39b	4-66
Removal	4-39a	4-66
T		
Table of contents		ii

	Para.	Page
T (Cont'd)		
Tables:		
Air conditioning troubleshooting (table 14-3)	14-6	14-19
Alignment specifications for radial tires (table 34-1)	34-3	34-1
Alternator speed and current tracking (table 18-3)	18-3	18-5
Apply pin selection (table 28-3)	28-19	28-85
Countersinking dimensions for 100° countersunk blind rivets (table 10-3)	10-56	10-94
Countersinking dimensions for 100° countersunk blind rivets (table 33-3)	33-7	33-9
Differences between models (table 1-1)	1-14	1-18
Drill sizes for blind rivets (table 10-2)	10-56	10-93
Drill sizes for blind rivets (table 33-2)	33-7	33-8
Drill sizes for solid shank rivets (table 10-1)	10-56	10-93
Drill sizes for solid shank rivets (table 33-1)	33-7	33-8
Front selective washer thickness (table 28-2)	28-19	28-83
Full-load test (table 18-2)	18-3	18-4
Guide for preparation of antifreeze solutions (table 3-1)	3-61	3-111
Mechanical troubleshooting (table 14-1) (DS/GS)	14-2	14-3
Minimum sheet gauge for 100° machine countersink (table 10-4)	10-56	10-94
. Minimum sheet gauge for 100° machine countersink (table 33-4)	33-7	33-9
No-load test (table 18-1)	18-3	18-4
Normal operating pressures and temperatures (table 14-2)	14-6	14-18
Pinion variance table (inches) (table 30-1)	30-3	30-12
Rear selective washer thickness (table 28-1)	28-19	28-76
Regulator bypass test (table 18-4)	18-3	18-5
Rivet grip length determination (table 10-5)	10-56	10-95
Stop-drill sizes for negligible cracks (table 33-5)	33-8	33-13

INDEX (Cont'd)

	Para.	Page
T (Cont'd)		
Suspension alignment change (table 34-2)	34-3	34-2
Tabulated data (table 1-2)	1-15	1-19
Toe-in alignment adjustment specifications (table 8-1)	8-9	8-26
Toe-out alignment adjustment specifications (table 8-2)	8-10	8-32
Unit preventive maintenance checks and services (table 2-1)		2-5
Tabulated data	1-15	1-19
Tailgate:		
Installation	10-38b	10-66
Removal	10-38a	10-65
Tailgate armor plate:		
Installation	11-47b	11-95
Removal	11-47a	11-95
Tailgate bracket, shelter carrier:		
Installation	11-74b	11-135
Removal	11-74a	11-135
Tailgate chain and brackets:		
Installation	10-35b	10-62
Removal	10-35a	10-61
Tailgate chain, shelter carrier:		
Assembly	11-77c	11-138
Disassembly	11-77b	11-138
Installation	11-77d	11-138
Removal	11-77a	11-138
Tailgate, shelter carrier:		
Installation	11-75b	11-136
Removal	11-75a	11-136
Tailgate upper hinge:		
Installation	10-39b	10-68
Removal	10-39a	10-67
Tailpipe:		
Installation	3-48b	3-91
Removal	3-48a	3-90
Tailpipe hanger:		
Installation	3-53b	3-98
Removal	3-53a	3-98
Tailpipe insulator:		
Installation	3-54b	3-99
Removal	3-54a	3-99
Temperature sending unit, engine:		
Installation	4-28b	4-51
Removal	4-28a	4-51
Tensioner, idler pulleys, and mounting hardware:		
Installation	3-82b	3-144
Removal	3-82a	3-144
Tensioner and mounting hardware (serial numbers 196901 and above):		
Installation	3-82.1b	3-144
Removal	3-82.1a	3-144
Terminal board:		
Installation	12-18b	12-32
Removal	12-18a	12-32
Thermostat:		
Installation	3-76b	3-132
Removal	3-76a	3-132
Thermostat bypass hose:		
Installation	3-68b	3-123
Removal	3-68a	3-123
Three point seatbelt:		
Front seatbelt bracket inspection	10-47b	10-78
Front seatbelt installation	10-47c	10-79
Front seatbelt removal	10-47a	10-78
Rear seatbelt bracket inspection	10-47e	10-80
Rear seatbelt installation	10-47f	10-80
Rear seatbelt removal	10-47d	10-80
Three point seatbelt brackets:		
Installation	10-46b	10-77
Removal	10-46a	10-77
Throttle control cable and bracket, hand:		
Installation	3-46b	3-88
Removal	3-46a	3-88
Throttle Position (TP) sensor:		
Adjustment	4-46c	4-76
Installation	4-46b	4-76
Removal	4-46a	4-76
Tiedown bracket, rear-front:		
Installation	24-14b	24-18
Removal	24-14a	24-18
Tiedown bracket, rear-rear:		
Installation	24-12b	24-16
Removal	24-12a	24-16
Tiedown, cargo:		
Installation	10-52b	10-87
Removal	10-52a	10-87
Tiedown ring:		
Installation	9-4b	9-4
Removal	9-4a	9-4
Tie rod:		
Assembly	8-13c	8-37
Disassembly	8-13b	8-37
Installation	8-13d	8-37
Removal	8-13a	8-38

INDEX (Cont'd)

	Para.	Page
T (Cont'd)		
Tie rod end:		
Installation	8-16b	8-44
Removal	8-16a	8-44
Time-delay module:		
Installation	4-35b	4-61
Removal	4-35a	4-61
Timing chain cover, timing chain, and drive sprockets:		
Inspection	15-10b	15-21
Installation	15-10c	15-22
Removal	15-10a	15-20
Tip removal, glow plug (damaged or broken)	15-22	15-40
Tire balancing	8-8	8-22
Tire, wheel and rubber runflat radial:		
Assembly	8-4d	8-13
Disassembly	8-4a	8-8
Inspection and cleaning	8-4b	8-11
Repair	8-4c	8-12
Toe-in alignment, front wheel:		
Preliminary inspection	8-9a	8-24
Toe-in adjustment	8-9c	8-28
Toe-in check	8-9b	8-26
Toe-out alignment, rear wheel:		
Preliminary inspection	8-10a	8-30
Toe-out adjustment	8-10c	8-34
Toe-out check	8-10b	8-32
Toggle switch and harness, A/C:		
Installation	11-84b	11-150
Removal	11-84a	11-150
Tool kit stowage strap and bracket:		
Inspection	10-37b	10-64
Installation	10-37c	10-64
Removal	10-37a	10-64
Top armor, C-pillar:		
Inspection	11-45b	11-92
Installation	11-45c	11-92
Removal	11-45a	11-92
Torque converter:		
Cleaning	28-4a	28-20
Inspection	28-4b	28-20
Torque limits: appendix E		E-1
Torsional damper:		
Installation	15-7b	15-16
Removal	15-7a	15-15
Towing brackets, front bumper and:		
Installation	9-2b	9-2
Removal	9-2a	9-2
T (Cont'd)		
Towing pintle:		
Assembly	9-9d	9-13
Cleaning	9-9c	9-12
Disassembly	9-9b	9-12
Installation	9-9e	9-14
Removal	9-9a	9-11
Track, and door stop, C-pillar door, guides:		
Inspection	25-12b	25-32
Installation	25-12c	25-34
Removal	25-12a	25-32
Transducer, fuel pressure:		
Installation	4-30b	4-54
Removal	4-30a	4-54
Transfer case:		
Assembly	29-3d	29-20
Cleaning	29-3b	29-12
Disassembly	29-3a	29-2
Inspection and repair	29-3c	29-12
Installation	20-3b	20-4
Removal	20-3a	20-2
Transfer case and transmission electrical maintenance task summary	4-38	4-65
Transfer case guide cable:		
Installation	20-4b	20-8
Removal	20-4a	20-8
Transfer case indicator lamp assembly:		
Installation	4-40b	4-67
Removal	4-40a	4-67
Transfer case indicator switch:		
Installation	4-39b	4-66
Removal	4-39a	4-66
Transfer case maintenance task summary:		
Direct support	20-2	20-1
General support	29-2	29-1
Unit	5-15	5-31
Transfer case oil seals:		
Front oil seal installation	5-18b	5-36
Front oil seal removal	5-18a	5-36
Rear oil seal installation	5-18d	5-38
Rear oil seal removal	5-18c	5-38
Transfer case shift rod:		
Adjustment	5-16c	5-32
Installation	5-16b	5-32
Removal	5-16a	5-32
Transfer case vent line:		
Installation	5-19b	5-39
Removal	5-19a	5-39

INDEX (Cont'd)

	Para.	Page
T (Cont'd)		
Transmission, and power steering oil cooler assembly, engine and:		
Cleaning and inspection	3-8c	3-14
Installation	3-8b	3-14
Removal	3-8a	3-12
Transmission assembly from subassemblies:		
Band apply pin check	28-19l	28-84
Center support assembly	28-19b	28-74
Control valve assembly (1995-1996)	28-19n	28-86.1
Control valve assembly (1997-1998)	28-19n.1	28-88
Direct clutch assembly	28-19f	28-79
Forward clutch assembly	28-19g	28-79
Fourth clutch, turbine shaft, and overdrive carrier assembly	28-19h	28-80
Front servo	28-19k	28-84
Front unit end play check	28-19j	28-83
Gear unit assembly	28-19c	28-74
Holding fixture	28-19q	28-91
Intermediate clutch assembly	28-19e	28-78
Oil pan and filter assembly	28-19o	28-90
Parking lock pawl and actuator assembly	28-19a	28-72
Pump assembly	28-19i	28-82
Rear servo	28-19m	28-86
Rear unit end play check	28-19d	28-76
Speed sensors	28-19p	28-90
Torque converter	28-19r	28-91
Transmission bypass valve:		
Installation	5-4b	5-12
Removal	5-4a	5-12
Transmission case:		
Cleaning	28-5a	28-22
Inspection	28-5b	28-22
Transmission circuit breakers:		
Installation	4-43b	4-70
Removal	4-43a	4-70
Transmission Control Module (TCM):		
Installation	4-45b	4-74
Removal	4-45a	4-74
Transmission Control Module (TCM) capacitator:		
Installation	4-47.1b	4-80
Removal	4-47.1a	4-80
Transmission crossmember support bracket:		
Installation	24-13b	24-17
Removal	24-13a	24-17
Transmission disassembly, repair, and assembly task summary	28-2	28-1
T (Cont'd)		
Transmission disassembly into subassemblies:		
Center support assembly	28-3q	28-18
Control valve assembly (1995-1996)	28-3e	28-6
Control valve assembly (1997-1998)	28.3e.1	28-8
Direct clutch assembly	28-3n	28-17
Forward clutch assembly	28-3m	28-16
Front end play check (measured)	28-3i	28-12
Front servo	28-3f	28-10
Gear unit assembly and rear band	28-3p	28-18
Holding fixture	28-3b	28-3
Intermediate clutch assembly	28-3o	28-18
Oil pan and filter assembly	28-3d	28-5
Parking lock pawl and actuator assembly	28-3h	28-11
Pump assembly	28-3k	28-14
Rear servo	28-3g	28-10
Rear unit end play check (measured)	28-3j	28-12
Speed sensors	28-3c	28-4
Torque converter	28-3a	28-2
Turbine shaft and overdrive carrier assembly	28-3l	28-15
Transmission indicator lamp assembly:		
Installation	4-41b	4-68
Removal	4-41a	4-68
Transmission Input Speed Sensor (TISS) and Output Speed Sensor (TOSS):		
Inspection	4-47b	4-78
Installation	4-47c	4-78
Removal	4-47a	4-78
Transmission maintenance task summary:		
Direct support	19-2	19-1
Unit	5-1	5-1
Transmission mount:		
Installation	5-13b	5-30
Removal	5-13a	5-30
Transmission mount crossmember:		
Installation	9-10b	9-16
Removal	9-10a	9-16
Transmission oil cooler lines:		
Front lines installation	5-3d	5-10
Front lines removal	5-3c	5-10
Rear lines installation	5-3b	5-8
Rear lines removal	5-3a	5-6

INDEX (Cont'd)

	Para.	Page
T (Cont'd)		
Transmission oil dipstick tube:		
Installation	5-5b	5-14
Removal	5-5a	5-14
Transmission preparation:		
Assembly	19-5b	19-14
Disassembly	19-5a	19-14
Transmission relay:		
Installation	4-44b	4-72
Removal	4-44a	4-72
Transmission road test	5-14	5-31
Transmission service:		
Draining fluid	5-2a	5-2
Replenishing fluid	5-2d	5-4
Transmission filter installation	5-2c	5-4
Transmission filter removal	5-2b	5-4
Transmission shift rod:		
Adjustment	5-9c	5-22
Installation	5-9b	5-22
Removal	5-9a	5-22
Transmission system tests	2-40	2-385
Transmission/transfer case assembly:		
Installation	19-4	19-7
Removal	19-3	19-2
Transmission vent line:		
Installation	5-10b	5-24
Removal	5-10a	5-24
Tray, battery:		
Cleaning and inspection	4-74b	4-130
Installation	4-74d	4-130
Preventive modification	4-74c	4-130
Removal	4-74a	4-130
Triple ammo box tray (40 mm):		
Installation	11-69b	11-130
Removal	11-69a	11-130
Troubleshooting, electrical/mechanical (unit):		
Air intake/exhaust tests	2-29	2-141
Alternator tests	2-33	2-199
Battery circuit tests	2-35	2-237
Brake system tests	2-41	2-419
Compression/mechanical tests	2-30	2-147
Cooling system tests	2-25	2-61
DCA troubleshooting	2-45	2-479
Drivetrain tests	2-43	2-453
Electrical circuit description	2-22	2-43
Electrical tests	2-27	2-75
Engine cooling tests	2-31	2-159
Engine lubrication tests	2-32	2-191
Engine running tests	2-24	2-51
Fuel system tests	2-28	2-99
Glossary of abbreviations and commonly used terms	2-21	2-42
Glow plugs circuit tests	2-37	2-289
How to use this troubleshooting guide	2-20	2-36
Index	2-19	2-35
Instrument tests	2-38	2-305
Lights tests	2-39	2-375
Lubrication system tests	2-26	2-69
Protective control box tests	2-34	2-213
Startability tests	2-23	2-45
Starter circuit tests	2-36	2-247
Steering system tests	2-42	2-433
STE/ICE-R test procedures	2-46	2-489
Transmission system tests	2-40	2-385
Vehicle testing	2-47	2-517
Winch system tests	2-44	2-471
Troubleshooting instructions, mechanical (DS/GS)	14-2	14-1
Troubleshooting symptom index, mechanical (DS/GS)	14-2	14-1
Tube, fuel drain-back:		
Installation	3-38b	3-76
Removal	3-38a	3-76
Tube, radiator lower, assembly:		
Installation	3-71b	3-127
Removal	3-71a	3-127
Tunnel interior side insulation:		
Installation	10-33b	10-59
Removal	10-33a	10-59
Turbine shaft and overdrive carrier assembly:		
Overdrive carrier cleaning	28-13g	28-52
Overdrive carrier inspection	28-13h	28-52
Overdrive carrier measurement	28-13f	28-52
Overdrive unit assembly	28-13j	28-54
Overdrive unit disassembly	28-13a	28-48
Overrun clutch assembly	28-13e	28-50
Overrun clutch cleaning	28-13c	28-48
Overrun clutch disassembly	28-13b	28-48
Overrun clutch inspection	28-13d	28-48
Turbine shaft inspection	28-13i	28-54
Turbocharger:		
Installation	15-21b	15-38
Removal	15-21a	15-38
Turret armor and seal:		
Installation	11-52b	11-103
Removal	11-52a	11-103
Turret armor and turret bearing hatch latch:		
Installation	11-50b	11-100
Removal	11-50a	11-100
Turret armor brush seal:		
Installation	11-51b	11-102
Removal	11-51a	11-102

INDEX (Cont'd)

	Para.	Page
T (Cont'd)		
Turret backrest:		
Installation	11-54b	11-106
Removal	11-54a	11-106
Turret bearing and stop ring:		
Adjustment	11-57d	11-111.2
Inspection	11-57b	11-110
Installation	11-57c	11-110
Removal	11-57a	11-110
Turret brake and base:		
Adjustment	11-55c	11-108
Installation	11-55b	11-108
Removal	11-55a	11-108
Turret brake assembly:		
Installation	11-55.1b	11-108.2
Removal	11-55.1a	11-108.2
Turret brake:		
Assembly	11-55.2c	11-108.6
Disassembly	11-55.2a	11-108.4
Inspection	11-55.2b	11-108.4
Turret cover:		
Installation	11-59.1b	11-112.2
Removal	11-59.1a	11-112.2
Turret door:		
Installation	11-53b	11-104
Removal	11-53a	11-104
Turret frame:		
Installation	25-4b	25-6
Removal	25-4a	25-4
Turret hatch assembly components:		
Hatch support rod clip installation	11-61g	11-118
Hatch support rod clip removal	11-61d	11-117
Pivot lug installation	11-61i	11-118
Pivot lug removal	11-61b	11-116
Pivot rod installation	11-61j	11-118
Pivot rod removal	11-61a	11-116
Protective bumper installation	11-61f	11-118
Protective bumper removal	11-61e	11-117
Strap fastener loop installation	11-61h	11-118
Strap fastener loop removal	11-61c	11-116
Turret hatch hinge seal:		
Installation	11-62.1b	11-120.2
Removal	11-62.1a	11-120.2
Turret hatch pivot base:		
Installation	11-59b	11-112.1
Removal	11-59a	11-112.1
Turret pintle mount:		
Inspection	11-62b	11-120
Installation	11-62c	11-120
Removal	11-62a	11-120

	Para.	Page
U		
U-joint, steering shaft:		
Installation	8-21b	8-60
Removal	8-21a	8-60
Umbilical power cable, 200-ampere dual voltage:		
Installation	4-7b	4-16
Removal	4-7a	4-14
Umbilical power cable, 200-ampere dual voltage	1-30	1-40
Underbody protection kit:		
Front shield installation	10-58.2k	10-98.18
Front shield removal	10-58.2b	10-98.5
Front skid plate installation	10-58.2l	10-98.19
Front skid plate removal	10-58.2a	10-98.4
Fuel tank shield installation	10-58.2g	10-98.11
Fuel tank shield removal	10-58.2f	10-98.11
Intermediate shield installation	10-58.2j	10-98.15
Intermediate shield removal	10-58.2c	10-98.6
Rear shield installation	10-58.2h	10-98.13
Rear shield removal	10-58.2e	10-98.10
Transfer case shield installation	10-58.2i	10-98.14
Transfer case shield removal	10-58.2d	10-98.9
Universal joint:		
Assembly	6-5b	6-10
Disassembly	6-5a	6-10
Upper ball joint:		
Inspection	6-23a	6-50.2
Installation	6-23c	6-52
Removal	6-23b	6-52
Upper control arm:		
Installation	6-25b	6-56
Removal	6-25a	6-56
Upper cowl liner, passenger side:		
Installation	25-13b	25-36
Removal	25-13a	25-36
Upper hinge, tailgate:		
Installation	10-39b	10-68
Removal	10-39a	10-67
V		
Valve assembly, 10,500 lb rear hydraulic winch (M1114):		
Installation	12-36.5b	12-68.23
Removal	12-36.5a	12-68.20
Valve, heater shutoff:		
Installation	10-72b	10-124
Removal	10-72a	10-124

INDEX (Cont'd)

	Para.	Page
V (Cont'd)		
Valve lifter, hydraulic:		
Installation	15-9b	15-18
Removal	15-9a	15-18
Valve, proportioning and differential:		
Differential valve installation	7-10b	7-32
Differential valve removal	7-10a	7-32
Proportioning valve installation	7-10d	7-33
Proportioning valve removal	7-10c	7-32
Vehicle testing	2-47	2-517
Vent line and filter, fuel tank:		
Installation	3-28b	3-56
Removal	3-28a	3-56
Vent line, differential:		
Installation	6-14b	6-39
Removal	6-14a	6-39
Vent line, front geared hub:		
Installation	6-16b	6-42
Removal	6-16a	6-42
Vent line, fuel tank filler spout:		
Installation	3-30b	3-60.2
Removal	3-30a	3-60
Vent line, rear geared hub:		
Installation	6-15b	6-40
Removal	6-15a	6-40
Vent lines, air intake and fuel pump:		
Installation	3-21b	3-37
Removal	3-21a	3-37
Vent line, transfer case:		
Installation	5-19b	5-39
Removal	5-19a	5-39
Vent line, transmission:		
Installation	5-10b	5-24
Removal	5-10a	5-24
Vent line, winch:		
Installation	12-29b	12-58
Removal	12-29a	12-58
V		
Wait-to-start lamp:		
Installation	4-20b	4-42
Removal	4-20a	4-42
Wastegate actuator:		
Installation	15-19b	15-36
Removal	15-19a	15-36
Wastegate housing:		
Installation	15-18b	15-35
Removal	15-18a	15-35
Water can tray:		
Installation	11-70b	11-131
Removal	11-70a	11-131

	Para.	Page
W (Cont'd)		
Water crossover:		
Inspection	3-79b	3-138
Installation	3-79c	3-138
Removal	3-79a	3-138
Water pump and adapter plate:		
Inspection	3-78b	3-134
Installation	3-78c	3-136
Removal	3-78a	3-134
Water pump inlet hose:		
Installation	3-73b	3-129
Removal	3-73a	3-129
Water pump pulley:		
Installation	3-77b	3-133
Removal	3-77a	3-133
Weapon carrier body maintenance task summary	11-1	11-1
Weathercap:		
Installation	3-18b	3-33
Removal	3-18a	3-33
Weatherstrip (M1113), windshield glass and:		
Installation	10-26b	10-48
Removal	10-26a	10-47
Wheel:		
Installation	8-3b	8-6
Removal	8-3a	8-6
Wheel, and rubber runflat, radial tire:		
Assembly	8-4d	8-13
Disassembly	8-4a	8-8
Inspection and cleaning	8-4b	8-11
Repair	8-4c	8-12
Wheel and runflat system maintenance task summary	8-1	8-1
Wheel, steering:		
Installation	8-12b	8-36
Removal	8-12a	8-36
Wheel stud:		
Installation	6-13b	6-38
Removal	6-13a	6-38
Wheel toe-in alignment, front:		
Preliminary inspection	8-9a	8-24
Toe-in adjustment	8-9c	8-28
Toe-in check	8-9b	8-26
Wheel toe-out alignment, rear:		
Preliminary inspection	8-10a	8-30
Toe-out adjustment	8-10c	8-34
Toe-out check	8-10b	8-32
Winch, 9,000 lb:		
Assembly	26-3d	26-7
Cleaning	26-3b	26-5
Disassembly	26-3a	26-2
Inspection	26-3c	26-6

INDEX (Cont'd)

	Para.	Page
W (Cont'd)		
Winch, 10,500 lb hydraulic:		
Assembly	25-13.2d	25-36.10
Cleaning	25-13.2b	25-36.10
Disassembly	25-13.2a	25-36.2
Inspection	25-13.2c	25-36.10
Winch cable:		
Installation	12-28b	12-56
Removal	12-28a	12-56
Winch cable, 10,500 lb hydraulic (M1113):		
Installation	12-28.1b	12-56.2
Removal	12-28.1a	12-56.2
Winch cable, 10,500 lb rear hydraulic (M1114):		
Installation	12-36.2b	12-68.4
Removal	12.36.2a	12-68.4
Winch, 10,500 rear hydraulic winch controller plug (M1114):		
Installation	12-36.6b	12-36.28
Removal	12-36.6a	12-36.26
Winch, 10,500 lb hydraulic winch controller plug:		
Installation	12-32.1b	12-62.5
Removal	12-32.1a	12-62
Winch, 10,500 lb hydraulic hoses (M1113):		
Installation	12-31.1b	12-60.4
Removal	12-31.1a	12-60.2
Winch, 10,500 lb rear hydraulic hoses (M1114):		
Installation	12-36.4b	12-68.14
Removal	12-36.4a	12-68.8
Winch, front:		
Installation	12-27b	12-54
Removal	12-27a	12-52
Winch, 10,500 lb hydraulic and brackets (M1113):		
Brackets installation	12-27.1c	12-54.4
Brackets removal	12-27.1b	12-54.4
Winch installation	12-27.1d	12-54.4
Winch removal	12-27.1a	12-54.2
Winch, 10,500 lb rear hydraulic and brackets (M1114):		
Brackets installation	12-36.1c	12-68.2
Brackets removal	12-36.1b	12-68.2
Winch installation	12-36.1d	12-68.2
Winch removal	12-36.1a	12-68.1
Winch, 10,500 lb rear hydraulic fairlead roller bracket assembly (M1114):		
Installation	12-36.3b	12-68.6
Removal	12-36.3a	12-68.6
W (Cont'd)		
Winch kit maintenance task summary:		
Direct support	26-2	26-1
Unit	12-26	12-51
Winch power cable:		
Front power cable installation	4-77b	4-134
Front power cable removal	4-77a	4-134
Rear power cable installation	4-77d	4-136
Rear power cable removal	4-77c	4-136
Winch, rear:		
Installation	12-33b	12-64
Removal	12-33a	12-63
Winch, 10,500 rear hydraulic valve assembly (M1114):		
Installation	12-36.5b	12-68.23
Removal	12-36.5a	12-68.20
Winch system tests	2-44	2-471
Winch vent line:		
Installation	12-29b	12-58
Removal	12-29a	12-58
Winch vent line, rear:		
Installation	12-34b	12-66
Removal	12-34a	12-66
Window, door:		
Installation	11-3b	11-8
Removal	11-3a	11-6
Window seal, door:		
Installation	11-10b	11-20
Removal	11-10a	11-20
Windshield:		
Inspection	25-6b	25-12
Installation	25-6c	25-12
Removal	25-6a	25-10
Windshield assembly (M1113):		
Assembly	10-28c	10-52
Disassembly	10-28b	10-52
Installation	10-28d	10-52
Removal	10-28a	10-52
Windshield de-icer, defroster switch, and circuit breakers:		
Installation	10-67b	10-114
Removal	10-67a	10-114
Windshield glass (M1114):		
Inspection	10-27b	10-50
Installation	10-27c	10-50
Removal	10-27a	10-49
Windshield glass and weatherstrip (M1113):		
Installation	10-26b	10-48
Removal	10-26a	10-47

INDEX (Cont'd)

	Para.	Page
W (Cont'd)		
Windshield retention bracket:		
Installation	10-29b	10-54
Removal	10-29a	10-54
Windshield washer hoses:		
Installation	10-65b	10-110
Removal	10-65a	10-110
Windshield washer nozzle:		
Installation	10-66b	10-112
Removal	10-66a	10-112
Windshield washer reservoir and pump assembly:		
Inspection	10-64a.1	10-108
Installation	10-64b	10-108
Removal	10-64a	10-108
Windshield wiper arm pivot:		
Installation	10-60c	10-102
Removal	10-60b	10-102
Repair (optional)	10-60a	10-101
Windshield wiper blade and arm:		
Installation	10-62c	10-104
Removal	10-62a	10-104
Repair (optional)	10-62b	10-104
Windshield wiper linkage:		
Installation	10-61b	10-103
Removal	10-61a	10-103
Windshield wiper switch/motor:		
Installation	10-63b	10-106
Removal	10-63a	10-106
Windshield wiper/washer system operation	1-24	1-31
Wiring diagrams and schematic: appendix H		H-1
Wiring harness, body:		
Installation	27-3b	27-22
Removal	27-3a	27-22
Wiring harness connector:		
Connector assembly repair	4-80d	4-147
Female cable connector repair	4-80c	4-147
Male cable connector repair	4-80b	4-146
Protective control box lower cannon plug assembly repair	4-80f	4-148
Receptacle assembly repair	4-80e	4-148
Terminal-type cable connector repair	4-80a	4-146
Wiring harness, engine:		
Installation	18-6b	18-40
Removal	18-6a	18-34
W (Cont'd)		
Wiring harness, hood jumper:		
Installation	4-79b	4-143
Removal	4-79a	4-140
Wiring harness, STE/ICE-R:		
Installation	18-5b	18-30
Removal	18-5a	18-28

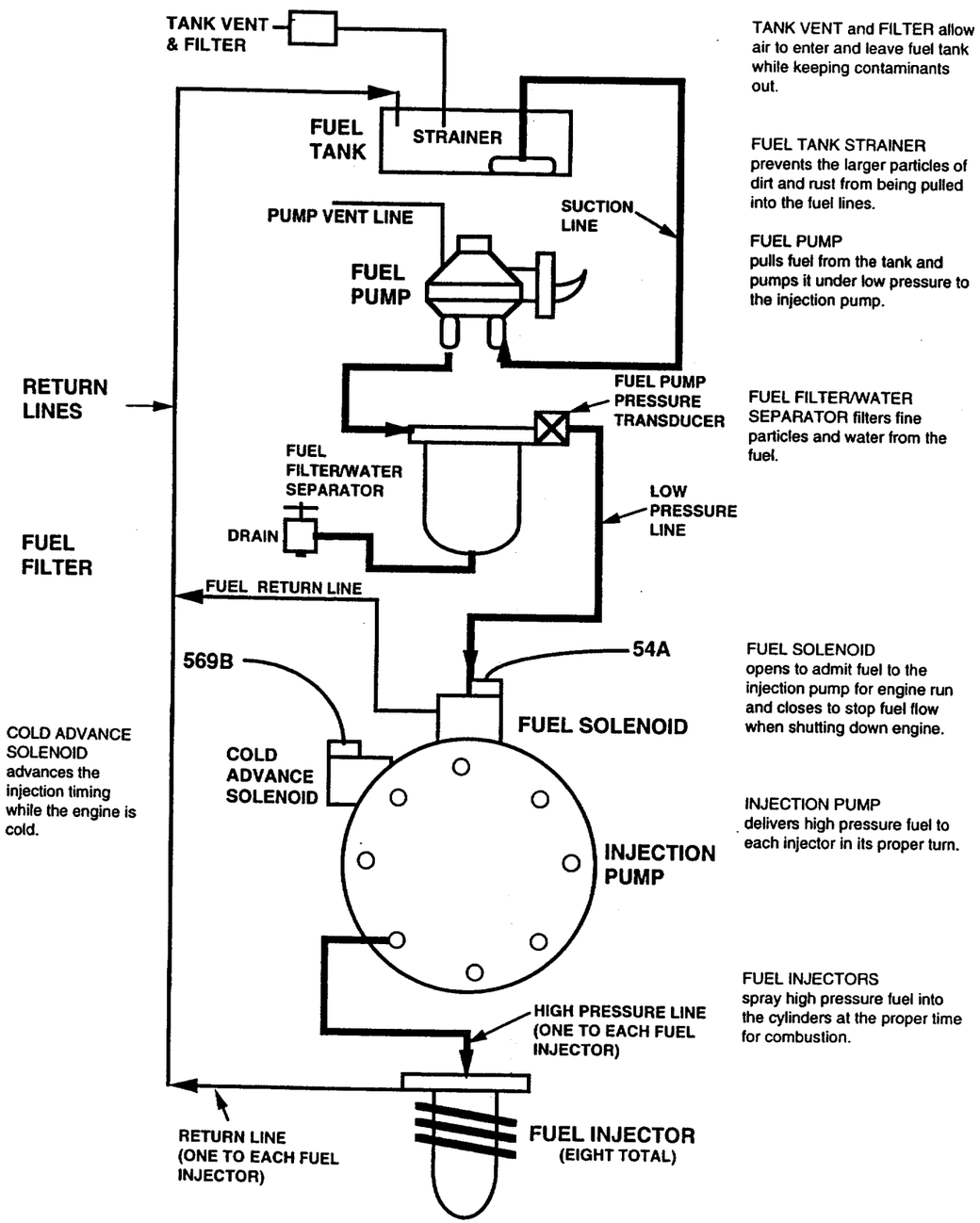

TANK VENT and FILTER allow air to enter and leave fuel tank while keeping contaminants out.

FUEL TANK STRAINER prevents the larger particles of dirt and rust from being pulled into the fuel lines.

FUEL PUMP pulls fuel from the tank and pumps it under low pressure to the injection pump.

FUEL FILTER/WATER SEPARATOR filters fine particles and water from the fuel.

FUEL SOLENOID opens to admit fuel to the injection pump for engine run and closes to stop fuel flow when shutting down engine.

INJECTION PUMP delivers high pressure fuel to each injector in its proper turn.

FUEL INJECTORS spray high pressure fuel into the cylinders at the proper time for combustion.

A	FUEL LIFT PUMP	DRAWS FUEL FROM FUEL TANK THROUGH THE SUPPLY LINE AND PUMPS IT TO THE FUEL FILTER
B	FUEL RETURN LINE	DIRECTS UNUSED FUEL FROM THE INJECTION PUMP BACK TO THE FUEL TANK
C	FUEL SUPPLY LINE	DIRECTS FUEL FROM FUEL TANK TO THE SYSTEM
D	FUEL TANK	STORES 25 GALLONS OF DIESEL FUEL
E	FUEL FILLER CAP	LOCATED AT RIGHT REAR SIDE OF VEHICLE, THE CAP IS REMOVED TO PERMIT FUEL TANK SERVICING
F	FUEL INJECTORS	RECEIVE METERED FUEL FROM THE INJECTION PUMP AND SPRAYS FUEL INTO THE COMBUSTION CHAMBER
G	FUEL FILTER/ WATER SEPARATOR	FILTERS WATER AND SEDIMENT FROM FUEL BEFORE FUEL ENTERS THE INJECTION PUMP
H	INJECTION PUMP	DIRECTS METERED AND PRESSURIZED FUEL TO THE EIGHT INJECTOR NOZZLES. IT IS MOUNTED ON TOP OF THE ENGINE UNDER THE INTAKE MANIFOLD

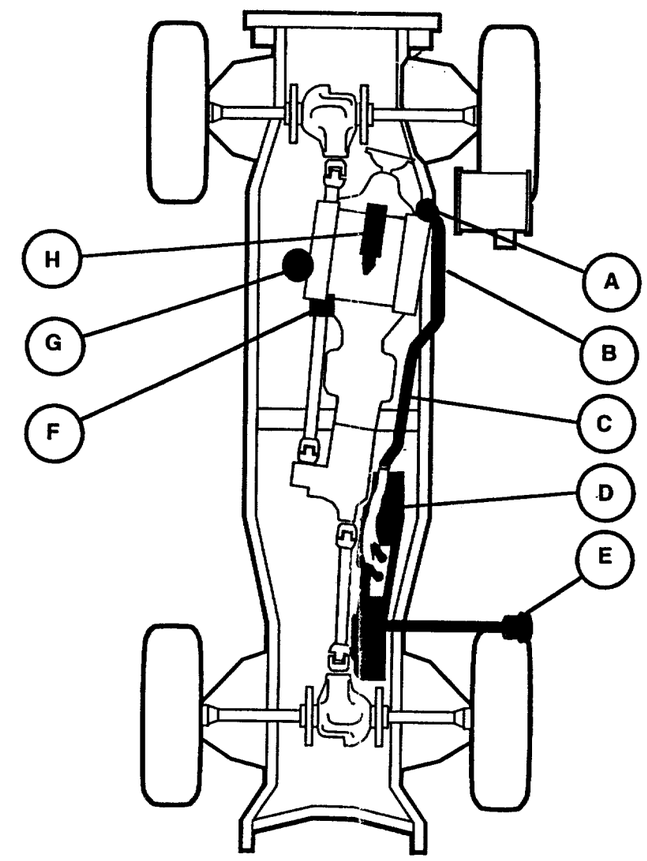

FO-1 Fuel System Functional Flow and Locations of Parts Diagrams

NOT APPLICABLE TO THIS SYSTEM

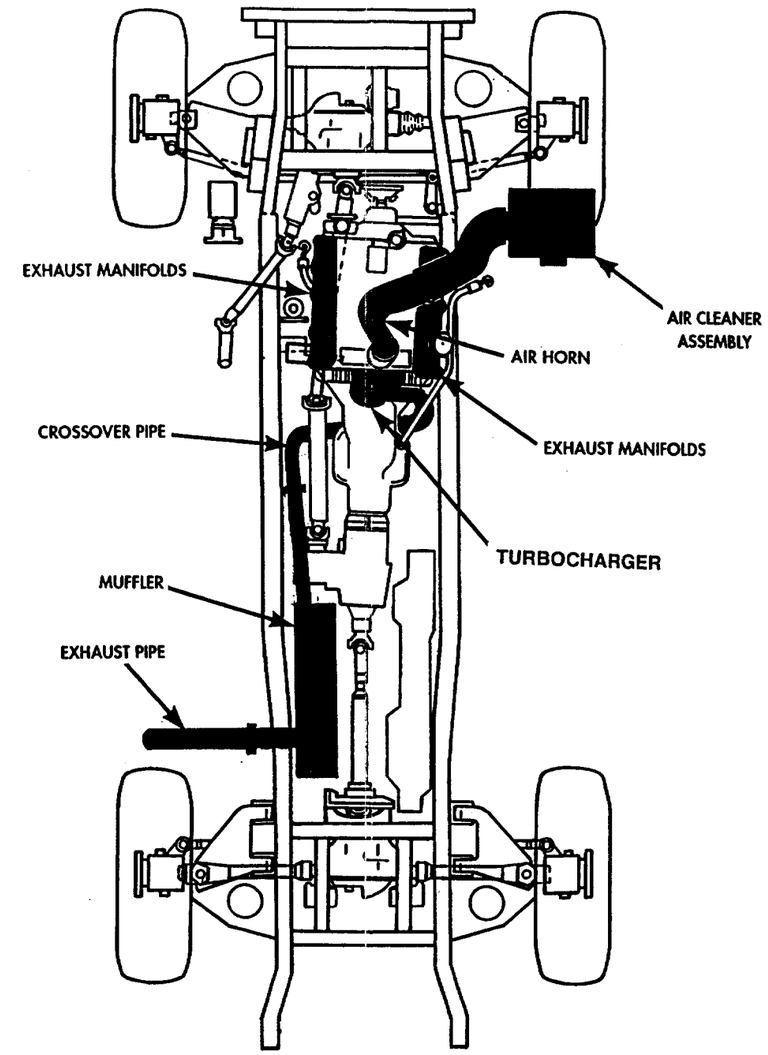

FO-2 Intake Air/Exhaust Functional Flow and Location of Parts Diagrams

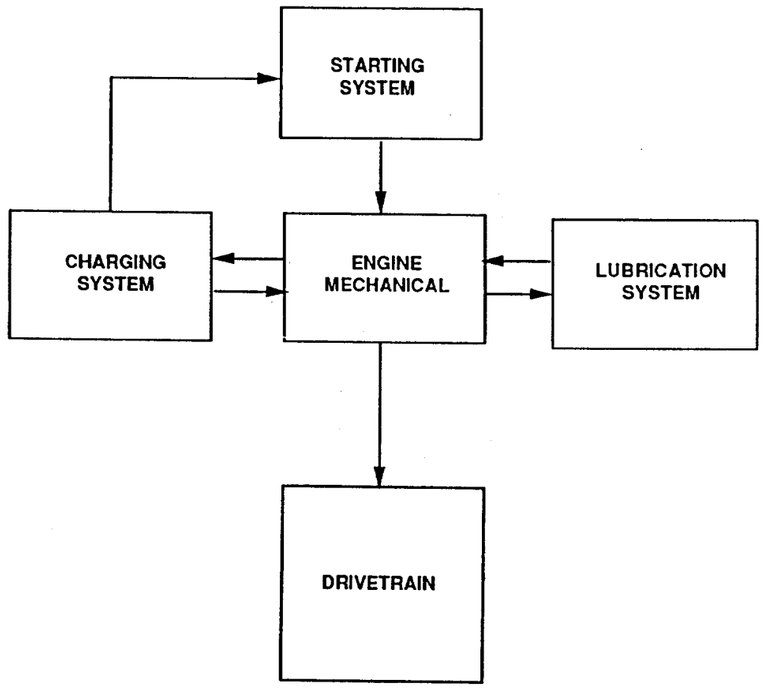

NOT APPLICABLE TO THIS SYSTEM

FO-3 Compression/Mechanical Function Flow and Location of Parts Diagrams

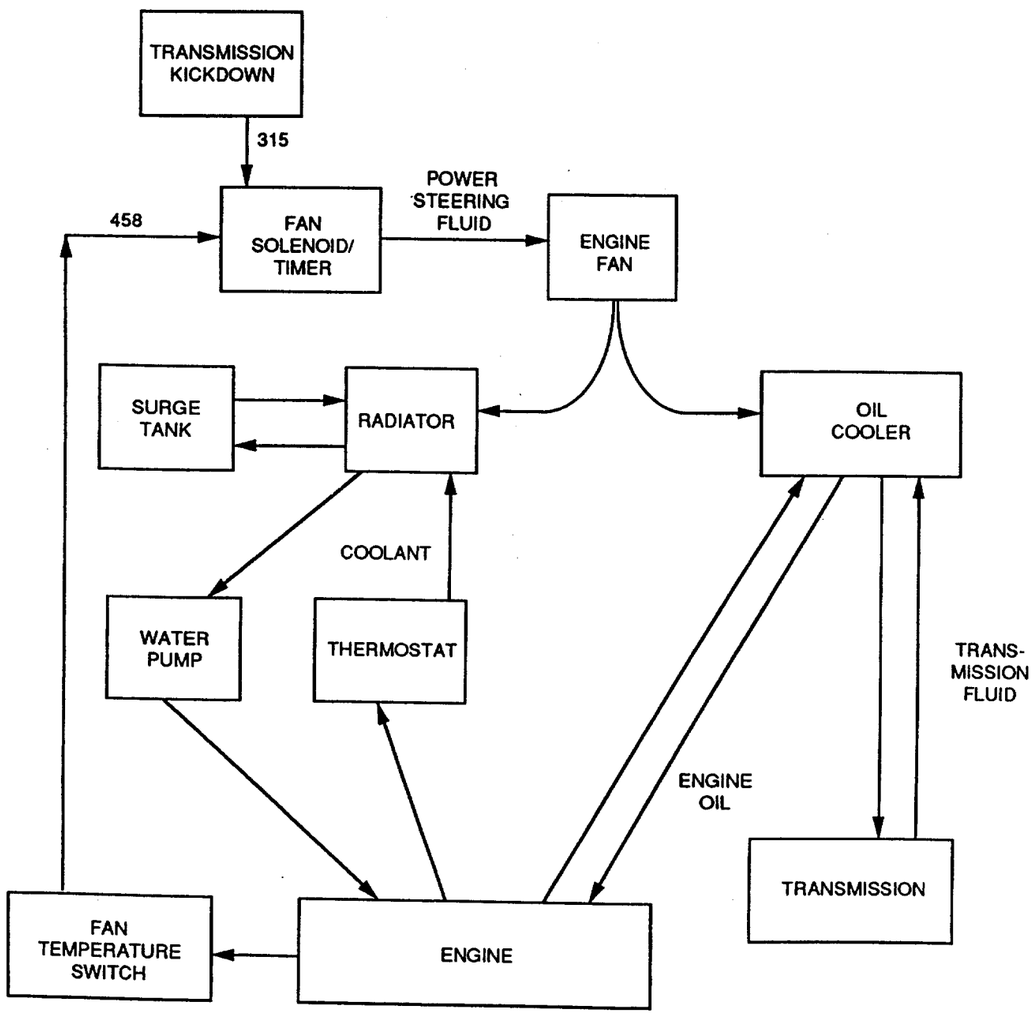

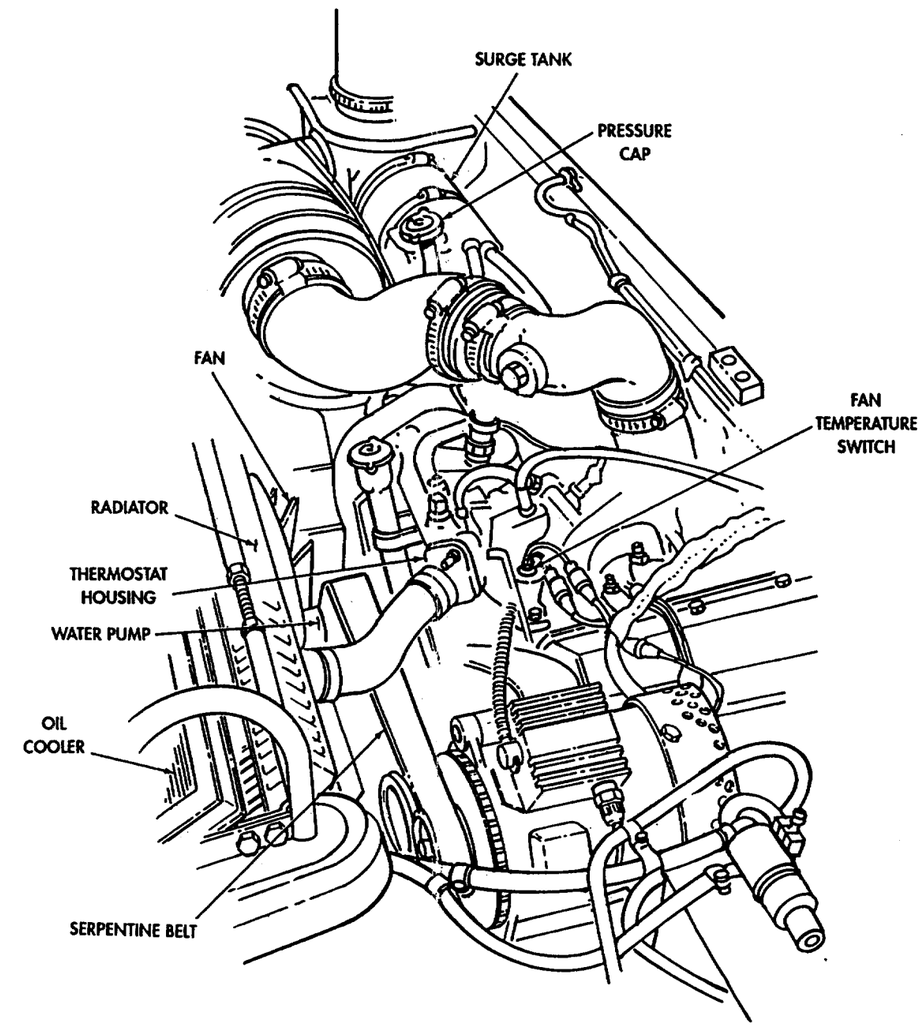

FO-4 Cooling Functional Flow and Location of Parts Diagrams

NOTE: HEAVIER LINES INDICATE OIL FLOW AND LIGHTER LINES ARE WIRES

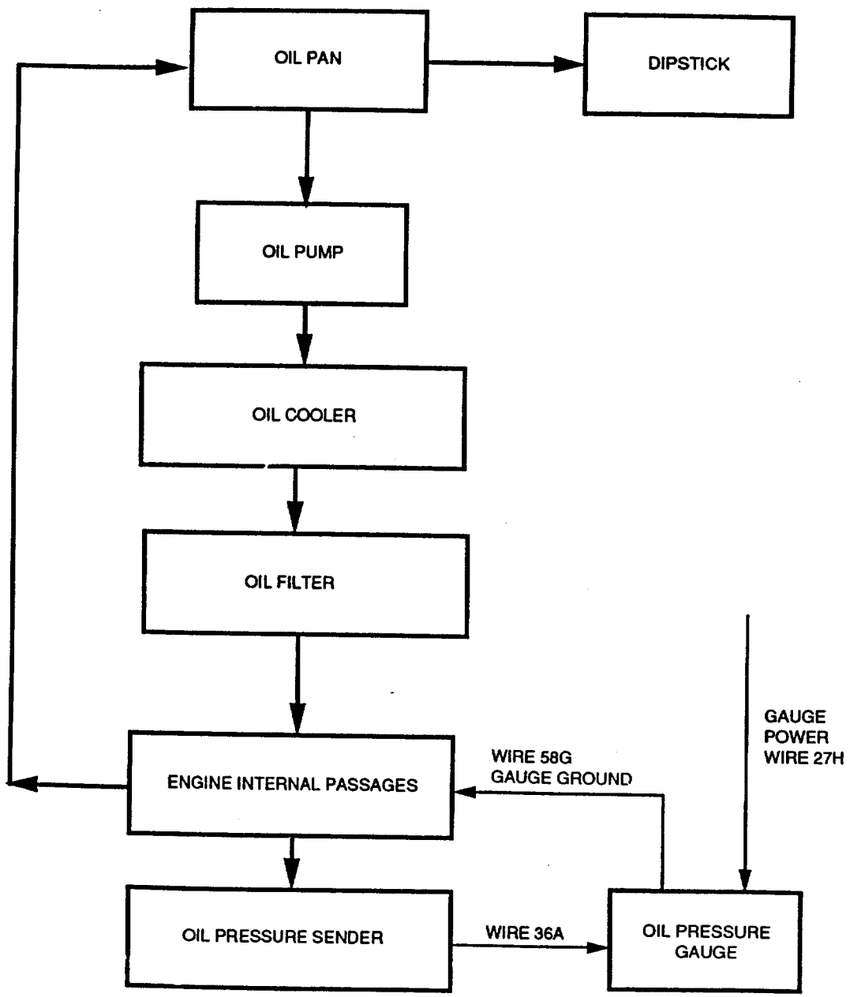

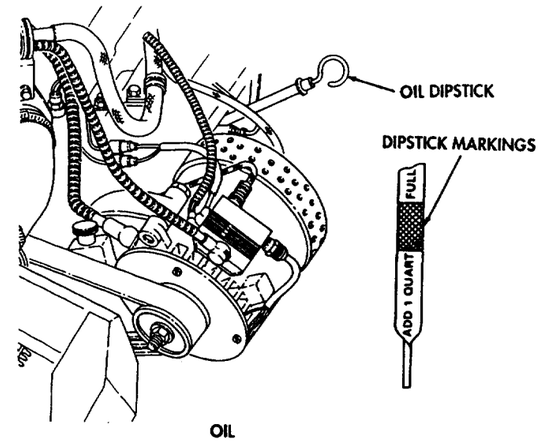

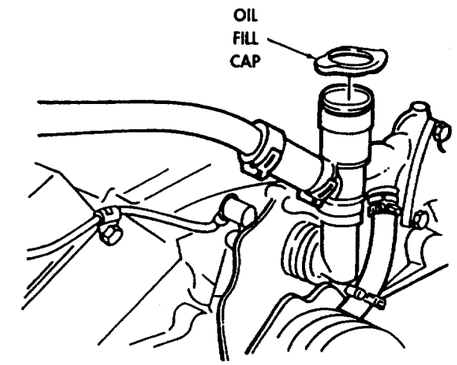

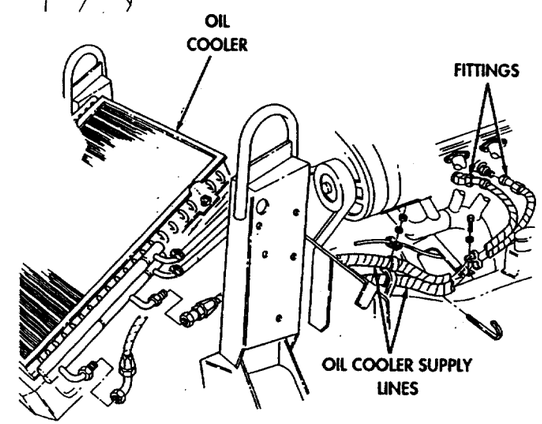

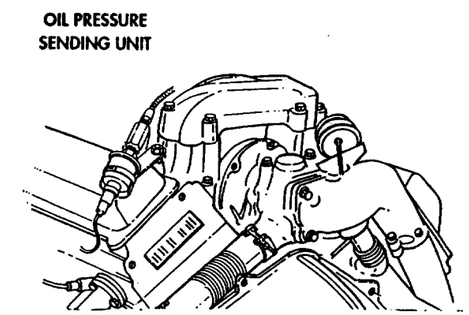

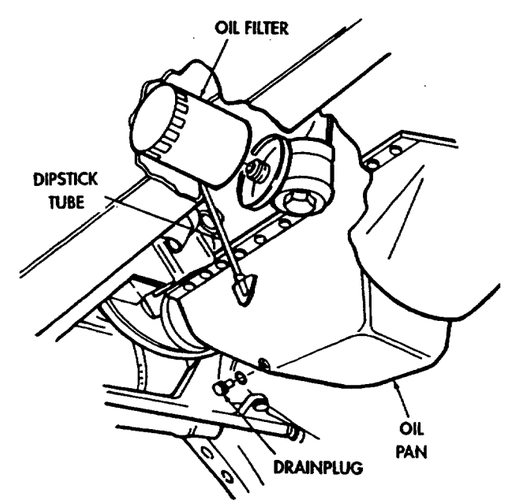

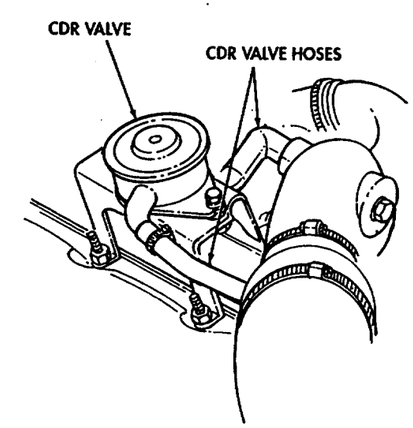

FO-5 Engine Lubrication Functional Flow and Location of Parts Diagrams

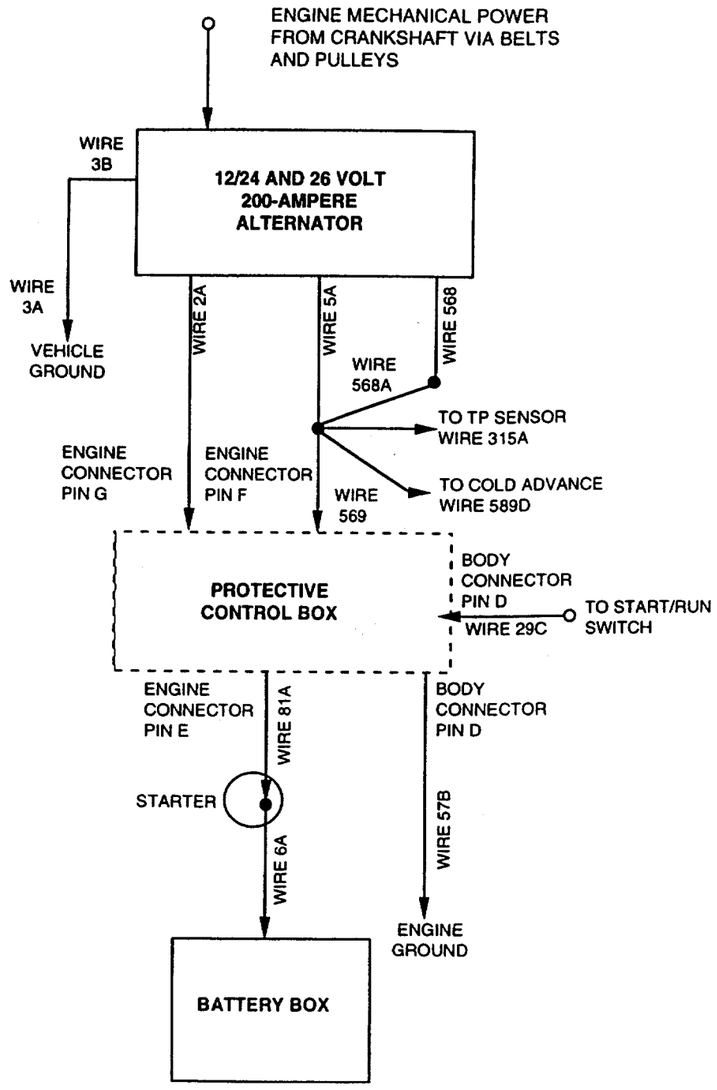

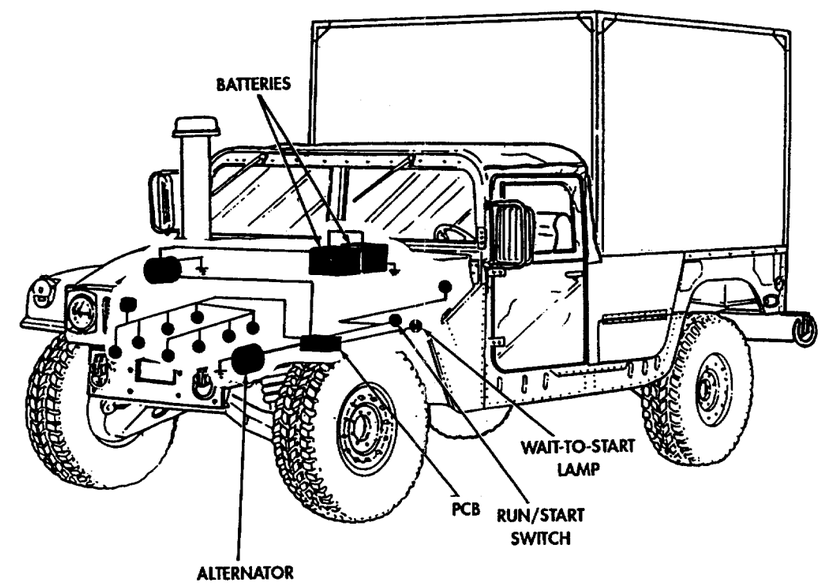

FO-6 Alternator Functional Flow and Location of Parts Diagrams

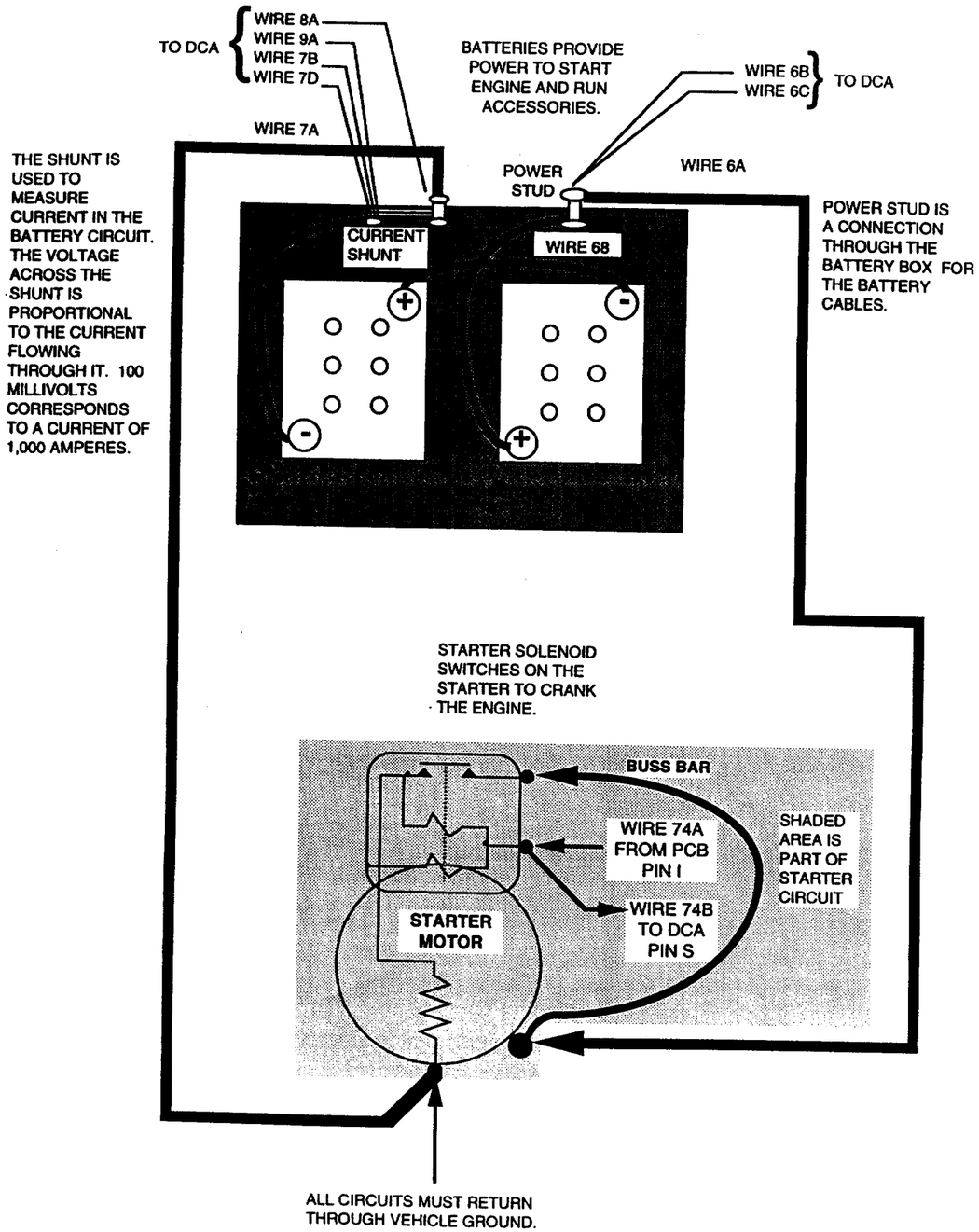

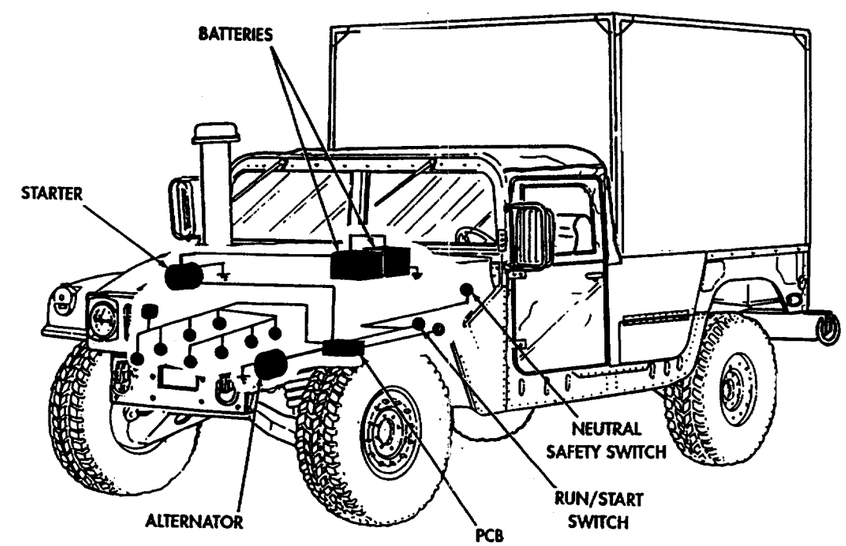

FO-7 Battery Functional Flow and Location of Parts Diagrams

The batteries provide power for the starter motor to turn the engine so it can start. The battery circuit tests, p. 13-1, check out the batteries and their connections to the starter (wires 6A and 7A).

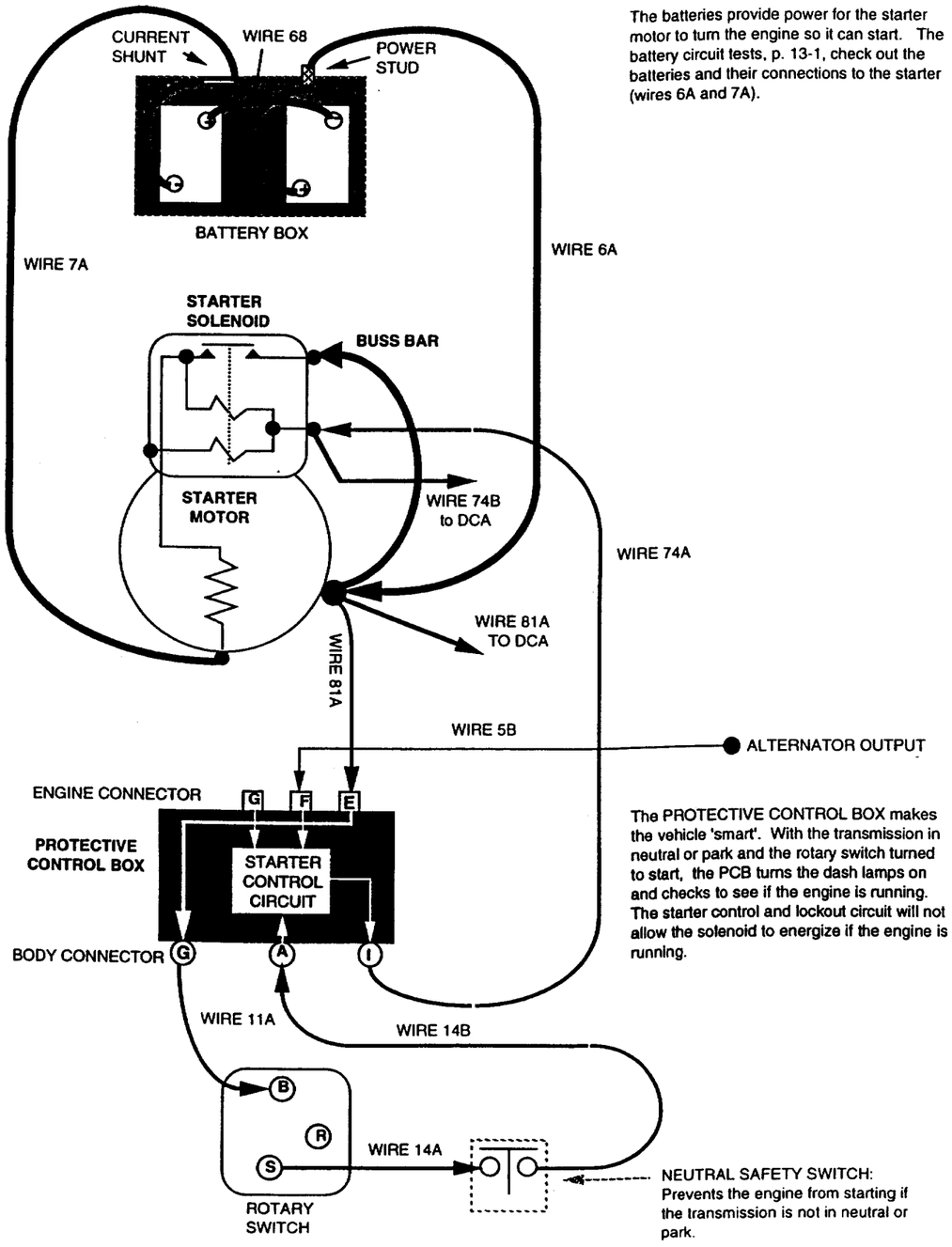

The PROTECTIVE CONTROL BOX makes the vehicle 'smart'. With the transmission in neutral or park and the rotary switch turned to start, the PCB turns the dash lamps on and checks to see if the engine is running. The starter control and lockout circuit will not allow the solenoid to energize if the engine is running.

NEUTRAL SAFETY SWITCH: Prevents the engine from starting if the transmission is not in neutral or park.

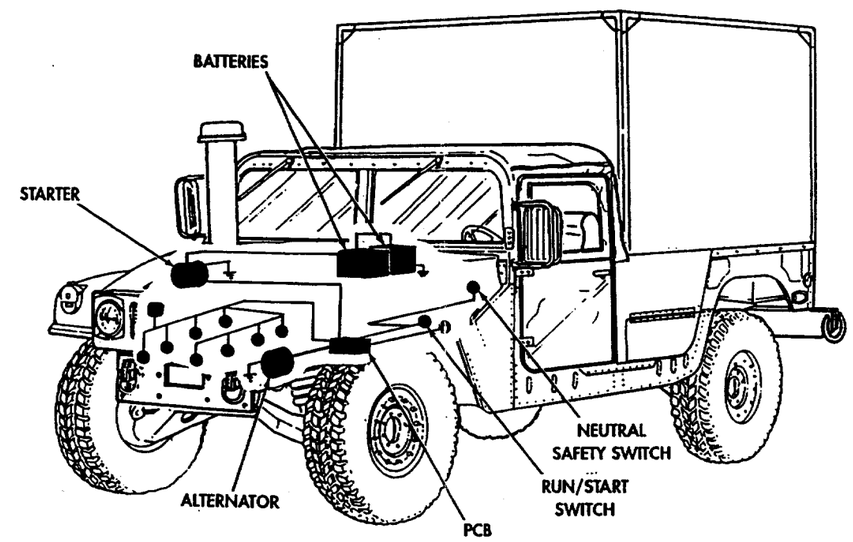

FO-8 Starter Circuit Functional Flow and Location of Parts Diagrams

Engine run primary

Ground

Alternator (A.C. tap)

Glow plug controller

5

6

1

130 Ω

Glow plug afterglow timer thermal circuit breaker: 160 °F (71°C) turns glow plugs on and off after a cold start. Engine temp. and the alternator a.c. tap signal control the cycling.

27Ω

Glow plug cycle timer thermal circuit breaker: 120°F (49°C) turns the glow plugs on for no more than 9 seconds, then cycles the glow plugs (on for 1 sec., off for 15) until the engine is started.

.58Ω

62Ω

Glow plug thermal protection breaker thermal circuit breaker: 300°F (149°C) protects glow plugs from overheating in the case of failure of the afterglow and cycle timers.

57

3

4

499

570

E-B

E-F

E-C

(B-H)

Engine run secondary

50

Instrument power

27

Protective Control Box (the whole box is not shown): E indicates engine connector, B indicates body connector

B-D

Glow plug power relay (in the Protective Control Box) applies battery power to glow plugs when all three thermal breakers are closed. You can hear this relay clicking as the glow plugs cycle.

B-E

571A

LED

Wait-to-start lamp control relay (in the Protective Control Box): when the glow plug cycle timer trips, this relay forces the wait-to-start lamp to stay off until the vehicle is turned off.

E-D

575A

Glow plugs

Wait-to-start lamp (next to the rotary switch on dash): comes on when the rotary switch is turned to 'run'. The colder the engine, the longer the lamp will stay on, but never more than 9 seconds. The lamp will not come on at all if the engine temperature is above 120° F (49°C). The lamp should not come on again unless the switch is turned to the 'stop' position and then back to 'run'.

NOTES ABOUT THERMAL CIRCUIT BREAKERS

Thermal circuit breakers act like switches that open when their temperature goes above a set temperature. They are closed below that temperature.

Each of these thermal circuit breakers also has a small heater, shown as a resistor. The temperature the breaker feels is the heat of the engine coolant plus the heat of the heater.

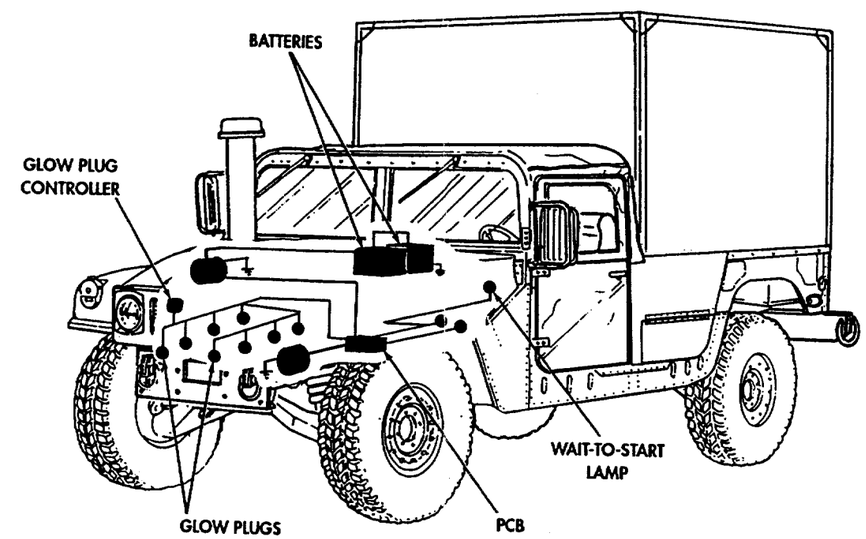

FO-9 Glow Plugs Functional Flow and Location of Parts Diagrams

The shaded area is part of vehicle master power, shown here for completeness and reference.

The BATTERY and ALTERNATOR provide power for all the vehicle's electrical systems and accessories.

The PROTECTIVE CONTROL BOX provides the logic and switching capabilities necessary to connect the various circuits to the battery and alternator when required.

The ROTARY SWITCH is the master power switch for the vehicle electrical system.

The CIRCUIT BREAKER interrupts electrical power in case of an overload (short circuit, etc.).

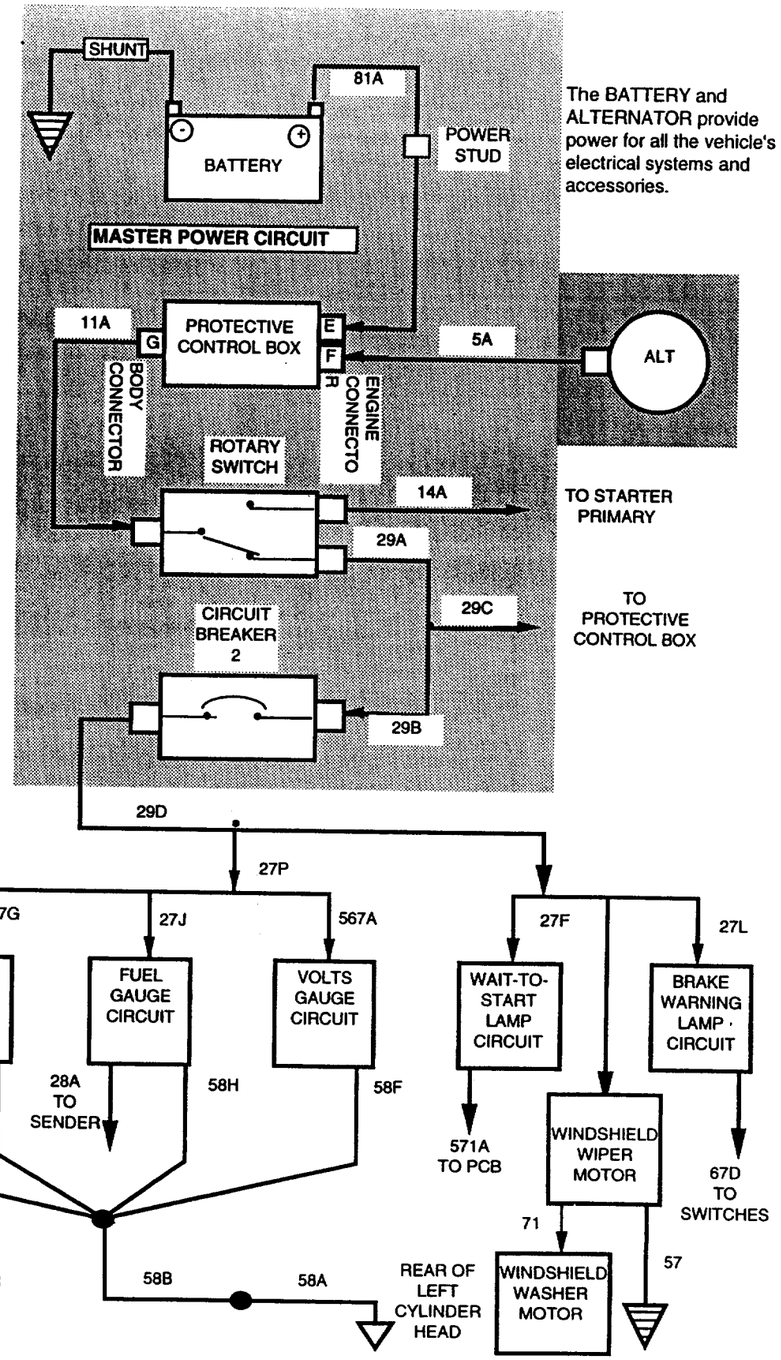

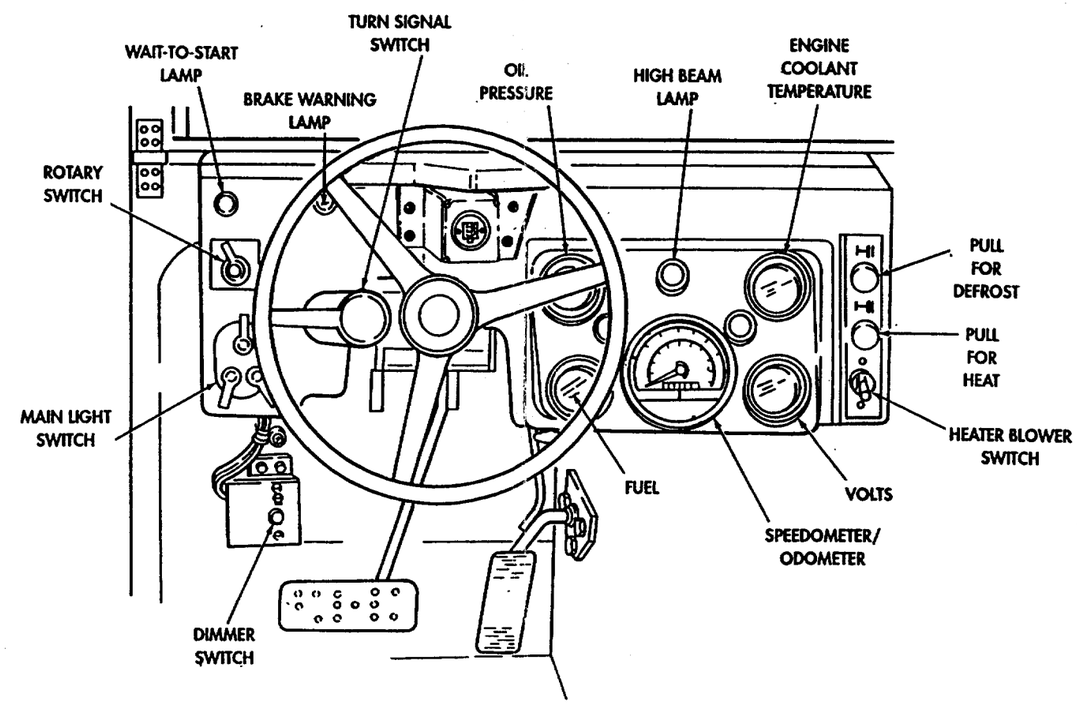

FO-10 Instruments Functional Flow and Location of Parts Diagram

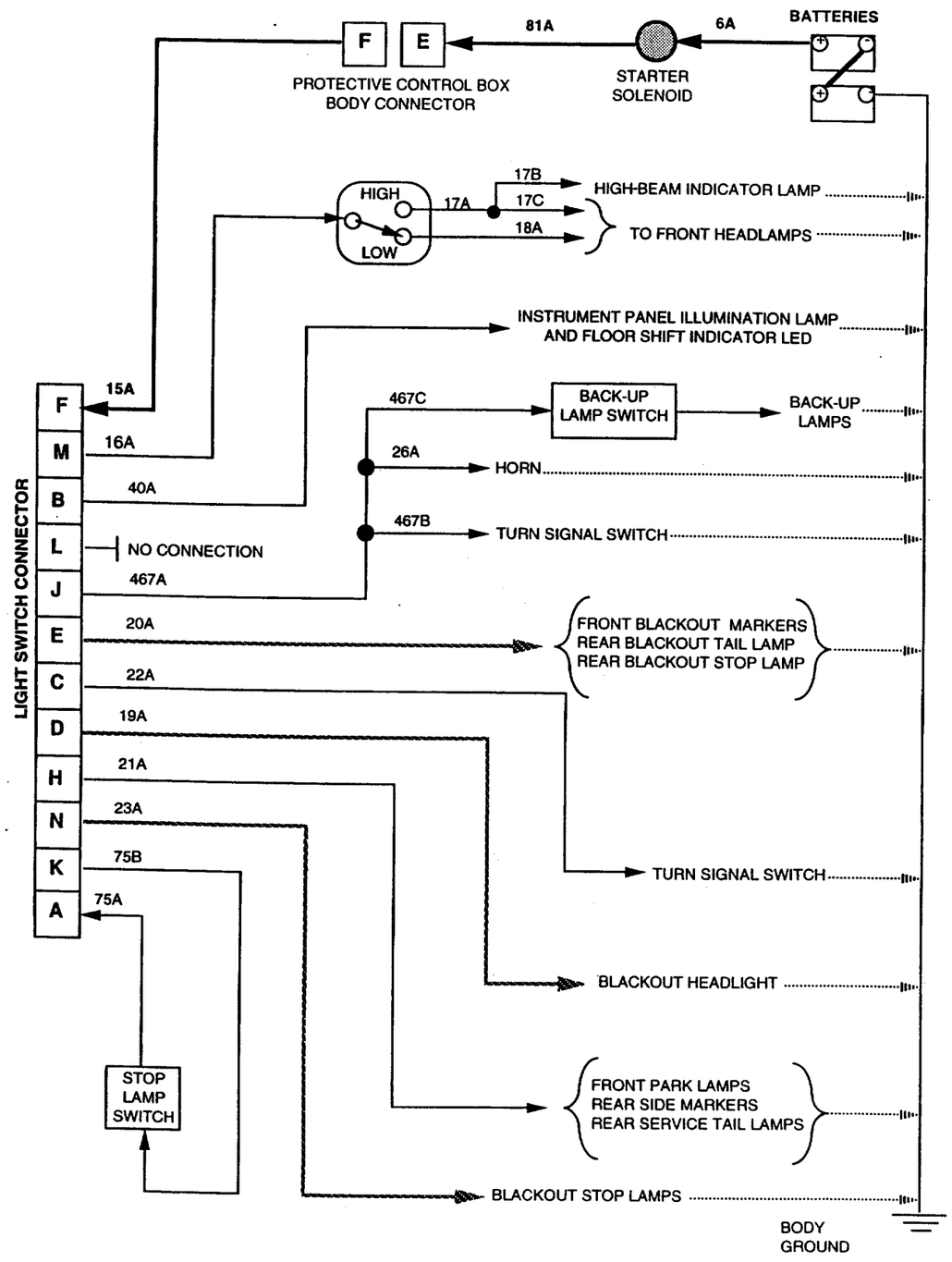

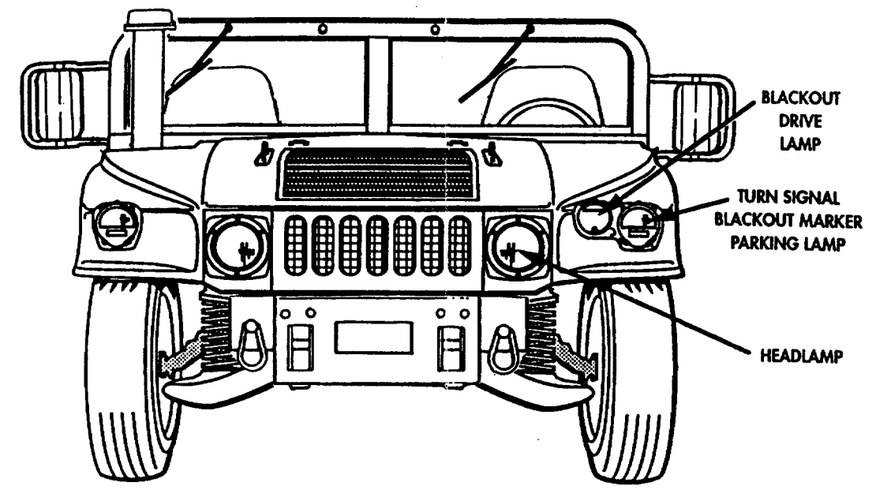

FRONT VIEW

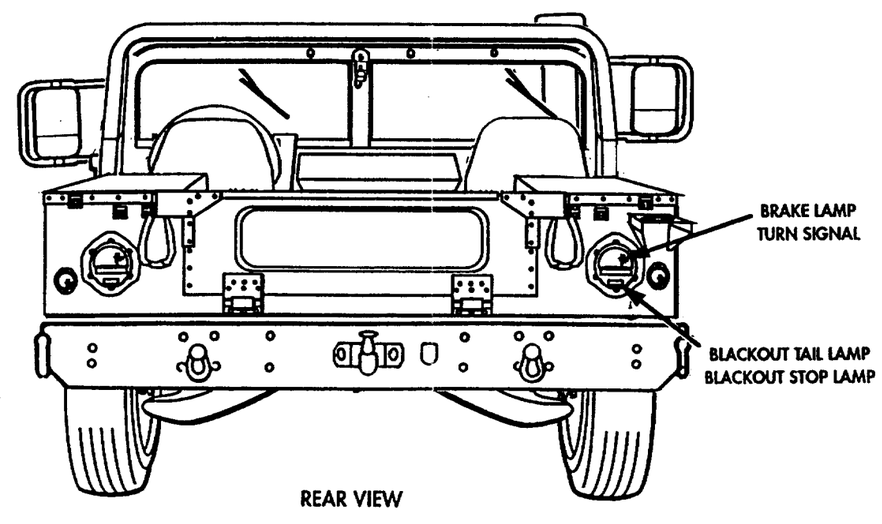

REAR VIEW

FO-11 Lights Functional Flow
and Location of Parts Diagrams

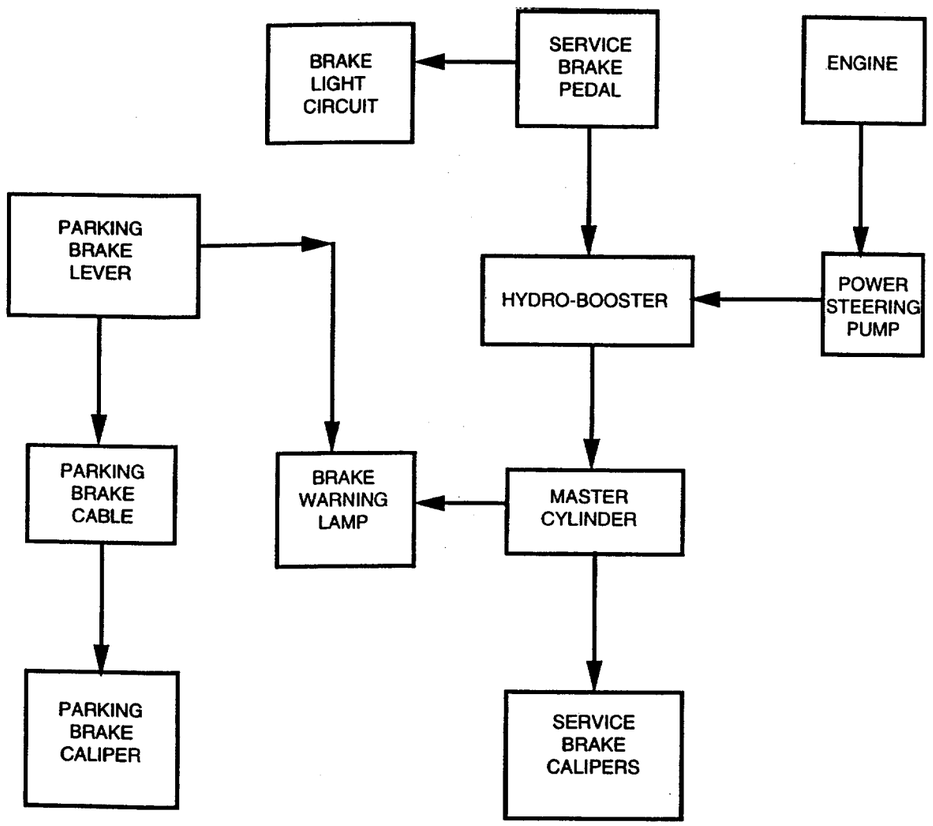

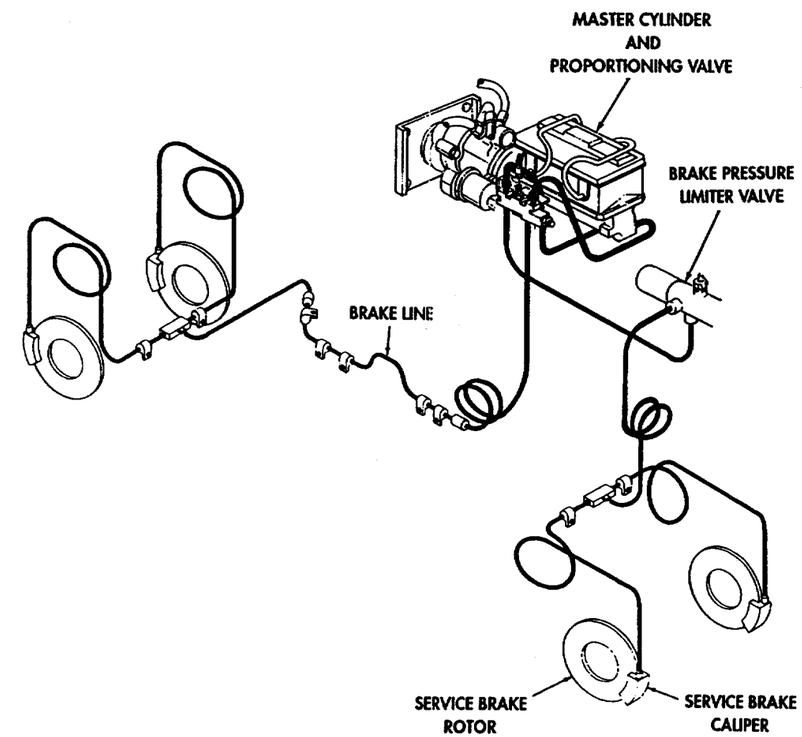

FO-12 Brakes Functional Flow and Location of Parts Diagrams

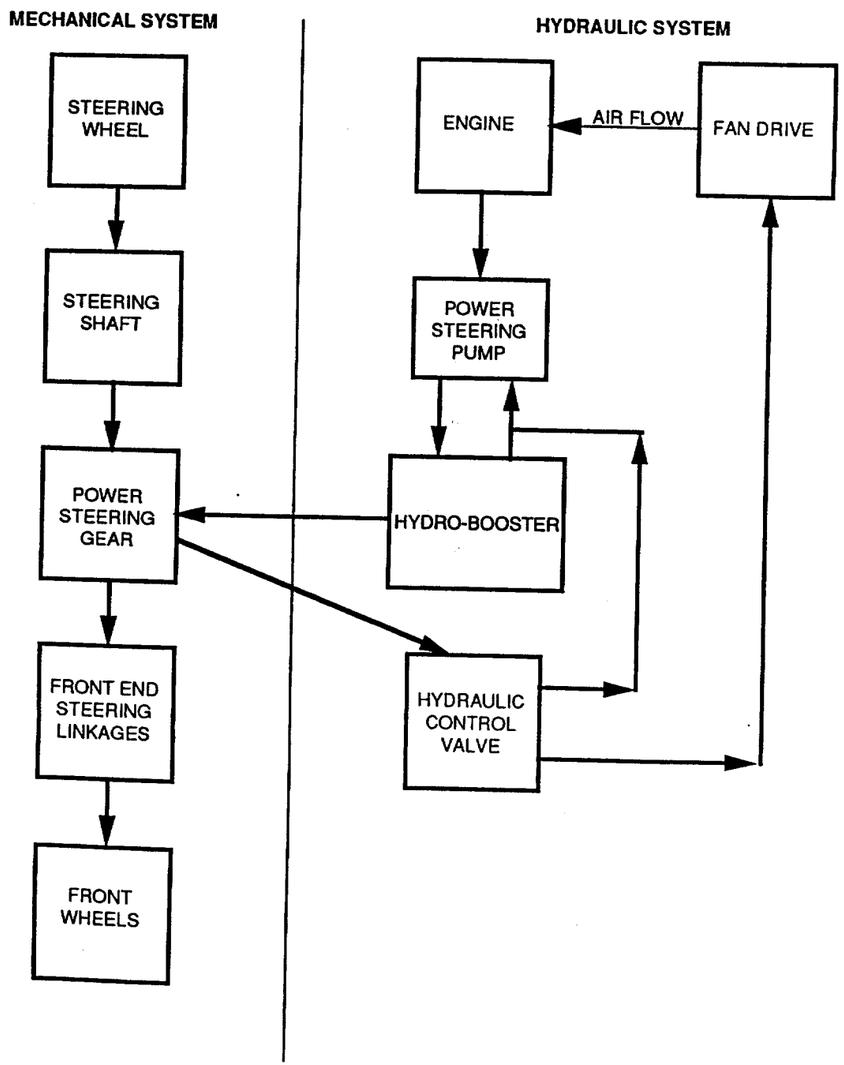

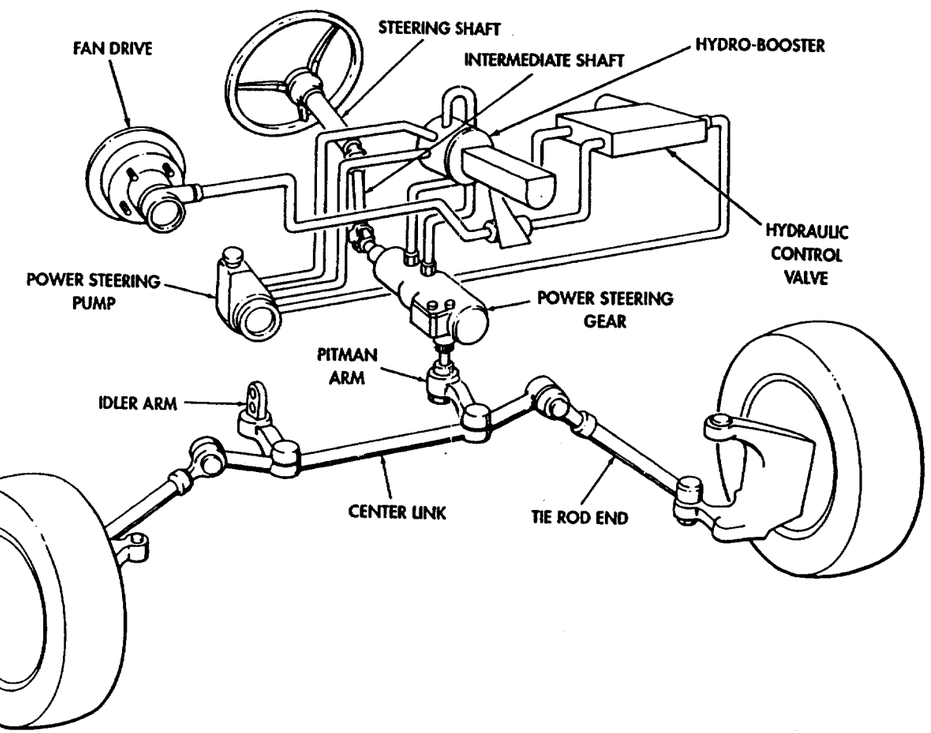

FO-13 Steering Functional Flow and Location of Parts Diagrams

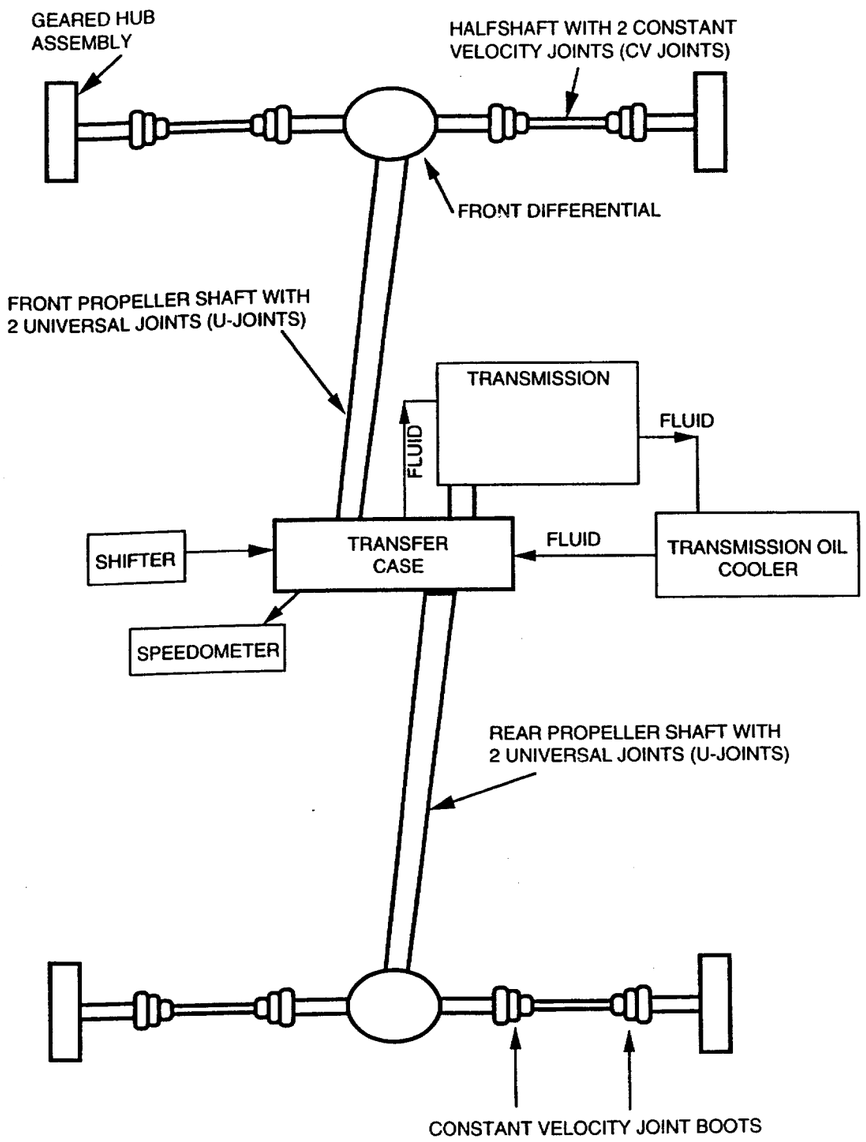

NOT APPLICABLE TO THIS SYSTEM

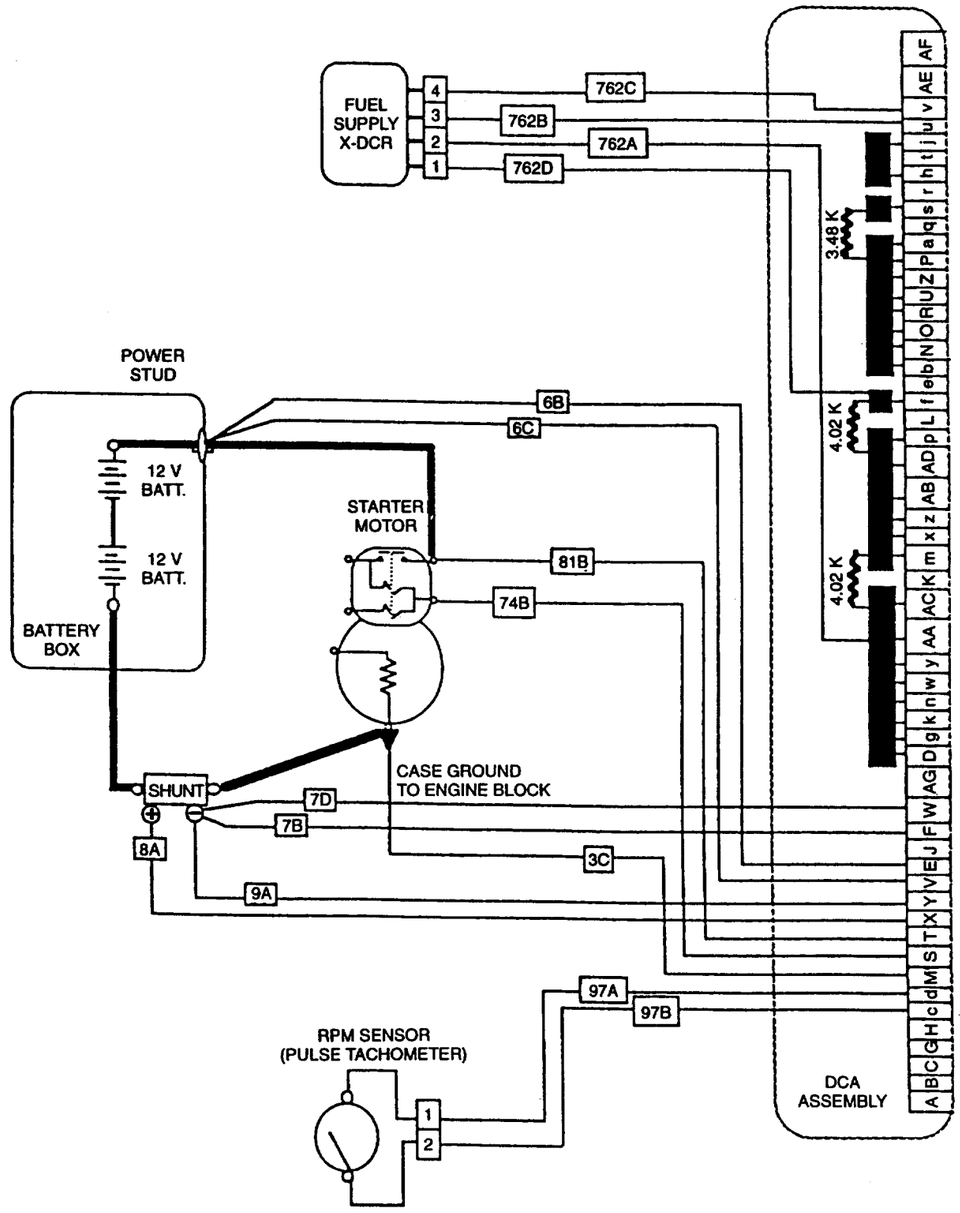

DCA TO TK CROSS REFERENCE

This table assumes that the VTM is powered by the W5 cable. For additional information on any of these tests, see para. 2-41 or TM 9-4910-571-12&P. Tests 72,73,74, and 75 are known as a first peak series, and data for all four of these tests are taken simultaneously.

DCA TEST	PARAMETER	USE TK ITEM	TEST NO.	MEASUREMENT POINTS
10	RPM	34-PULSE TACH. WITH A W4 CABLE	10	PUT IN PLACE OF VEHICLE TACH.
12	POWER (RPM/SEC)	34-PULSE TACH. WITH A W4 CABLE	12	PUT IN PLACE OF VEHICLE TACH.
13	POWER (PERCENT)	34-PULSE TACH. WITH A W4 CABLE	13	PUT IN PLACE OF VEHICLE TACH.
14	COMPRESSION UNBALANCE	NONE REQUIRED	14	VTM TAKES DATA THROUGH W5 (POWER) CABLE.
24	FUEL PRESSURE	22-RED PRESSURE TRANSDUCER	49	INSTALL IN PLACE OF VEHICLE FUEL PRESSURE TRANSDUCER.
67	BATTERY VOLTAGE	NONE REQUIRED	67	VTM TAKES DATA THROUGH W5 (POWER) CABLE.
68	STARTER MOTOR VOLTS	W2 CABLE	89	ATTACH RED CLIP TO STARTER POSITIVE TERMINAL (WIRE 6A), BLACK TO BATTERY SIDE OF SHUNT.
69	STARTER NEG. CABLE DROP	W2 CABLE	89	ATTACH RED CLIP TO STARTER GROUND TERMINAL (WIRE 7A), BLACK TO BATTERY SIDE OF SHUNT.
70	STARTER SOL. VOLTS	W2 CABLE	89	ATTACH RED CLIP TO STARTER SOLENOID TERMINAL (WIRE 74A), BLACK T0 STARTER GROUND TERMINAL.
71	STARTER CURRENT	11- CURRENT PROBE	90	PUT PROBE AROUND NEGATIVE BATTERY CABLE BETWEEN THE SHUNT AND THE BATTERY PACK.
72	CURRENT FIRST PEAK	11- CURRENT PROBE	72	PUT PROBE AROUND NEGATIVE BATTERY CABLE BETWEEN THE SHUNT AND THE BATTERY PACK.
73	BATTERY RESISTANCE	11- CURRENT PROBE	73	PUT PROBE AROUND NEGATIVE BATTERY CABLE BETWEEN THE SHUNT AND THE BATTERY PACK.
74	STARTER CIRCUIT RESISTANCE	11- CURRENT PROBE	74	PUT PROBE AROUND NEGATIVE BATTERY CABLE BETWEEN THE SHUNT AND THE BATTERY PACK.
75	BATTERY RESISTANCE CHANGE	11- CURRENT PROBE	75	PUT PROBE AROUND NEGATIVE BATTERY CABLE BETWEEN THE SHUNT AND THE BATTERY PACK.
80	BATTERY CURRENT	11- CURRENT PROBE	90	PUT PROBE AROUND NEGATIVE BATTERY CABLE BETWEEN THE SHUNT AND THE BATTERY PACK.

By Order of the Secretary of the Army:

DENNIS J. REIMER
General, United States Army
Chief of Staff

Official:

JOEL B. HUDSON
Administrative Assistant to the
Secretary of the Army
04972

By Order of the Secretary of the Air Force:

RONALD R. FOGLEMAN
General, United States Air Force
Chief of Staff

Official:

HENRY VICCELLIO, JR.
General, United States Air Force
Commander, Air Force Materiel Command

DISTRIBUTION: To be distributed in accordance with the initial distribution number (IDN) 381020, requirements for TM 9-2320-387-24-1.

RECOMMENDED CHANGES TO PUBLICATIONS AND BLANK FORMS For use of this form, see AR 25-30; the proponent agency is ODISC4.	Use Part II (reverse) for Repair Parts and Special Tools Lists (RPSTL) and Supply Catalogs/Supply Manuals (SC/SM).	DATE: 14 Dec 2001

TO: *(Forward to proponent of publication or form) (include ZIP code)*	FROM: *(Activity and location) (include ZIP code)*
AMSTA-LC-CI Tech Pubs, TACOM-RI 1 Rock Island Arsenal Rock Island, IL 61299-7630	Co. B, 1st BN, 2nd Brigade Ft. Hood, TX 76445

PART I - ALL PUBLICATIONS (EXCEPT RPSTL AND SC/SM) AND BLANK FORMS

PUBLICATION/FORM NUMBER	DATE	TITLE
TM 9-2320-387-24-1	31 DEC 97	TECHNICAL MANUAL, VOLUME 1 OF 2, UNIT, DIRECT SUPPORT, AND GENERAL SUPPORT MAINTENANCE

ITEM NO.	PAGE NO.	PARA-GRAPH	LINE NO.*	FIGURE NO.	TABLE NO.	RECOMMENDED CHANGES AND REASON *(Provide exact wording of recommended changes, if possible).*
1	3-142.2	3-81				Example illustration of use of pulley alignment tool does not accurately show alignment of pulleys.
2	5-27	5-11				The ring gear and torque converter, as illustrated, do not resemble the actual parts.

SAMPLE

**Reference to line numbers within the paragraph or subparagraph.*

TYPED NAME, GRADE, OR TITLE	TELEPHONE EXCHANGE/AUTOVON, PLUS EXTENSION	SIGNATURE
Pat Smith, ILT	AV272-4162	Pat Smith, ILT

DA FORM 2028, FEB 74 REPLACES DA FORM 2028, 1 DEC 68, WHICH WILL BE USED. USAPPC V3.00

TO: *(Forward direct to addressee listed in publication)* AMSTA-LC-CI Tech Pubs, TACOM-RI 1 Rock Island Arsenal Rock Island, IL 61299-7630	**FROM:** *(Activity and location) (include ZIP code)*	**DATE:**

PART II - REPAIR PARTS AND SPECIAL TOOLS LISTS AND SUPPLY CATALOGS/SUPPLY MANUALS

PUBLICATION/FORM NUMBER	DATE	TITLE

PAGE NO.	COLM NO.	LINE NO.	NATIONAL STOCK NUMBER	REFERENCE NO.	FIGURE NO.	ITEM NO.	TOTAL NO. OF MAJOR ITEMS SUPPORTED	RECOMMENDED ACTION

SAMPLE

PART III - REMARKS *(Any general remarks or recommendations, or suggestions for improvement of publications and blank forms. Additional blank sheets may be used if more space is needed.)*

TYPED NAME, GRADE, OR TITLE	TELEPHONE EXCHANGE/AUTOVON, PLUS EXTENSION	SIGNATURE

RECOMMENDED CHANGES TO PUBLICATIONS AND BLANK FORMS For use of this form, see AR 25-30; the proponent agency is ODISC4.	Use Part II (reverse) for Repair Parts and Special Tools Lists (RPSTL) and Supply Catalogs/Supply Manuals (SC/SM).	**DATE:**

TO: *(Forward to proponent of publication or form) (include ZIP code)* AMSTA-LC-CI Tech Pubs, TACOM-RI 1 Rock Island Arsenal Rock Island, IL 61299-7630	**FROM:** *(Activity and location) (include ZIP code)*

PART I - ALL PUBLICATIONS (EXCEPT RPSTL AND SC/SM) AND BLANK FORMS

PUBLICATION/FORM NUMBER	DATE	TITLE
TM 9-2320-387-24-1	**31 DEC 97**	**TECHNICAL MANUAL, VOLUME 1 OF 2, UNIT, DIRECT SUPPORT, AND GENERAL SUPPORT MAINTENANCE**

ITEM NO.	PAGE NO.	PARA-GRAPH	LINE NO.*	FIGURE NO.	TABLE NO.	RECOMMENDED CHANGES AND REASON *(Provide exact wording of recommended changes, if possible).*

**Reference to line numbers within the paragraph or subparagraph.*

TYPED NAME, GRADE, OR TITLE	TELEPHONE EXCHANGE/AUTOVON, PLUS EXTENSION	SIGNATURE

TO: *(Forward direct to addressee listed in publication)* AMSTA-LC-CI Tech Pubs, TACOM-RI 1 Rock Island Arsenal Rock Island, IL 61299-7630	**FROM:** *(Activity and location) (include ZIP code)*	**DATE:**

PART II - REPAIR PARTS AND SPECIAL TOOLS LISTS AND SUPPLY CATALOGS/SUPPLY MANUALS

PUBLICATION/FORM NUMBER	DATE	TITLE

PAGE NO.	COLM NO.	LINE NO.	NATIONAL STOCK NUMBER	REFERENCE NO.	FIGURE NO.	ITEM NO.	TOTAL NO. OF MAJOR ITEMS SUPPORTED	RECOMMENDED ACTION

PART III - REMARKS *(Any general remarks or recommendations, or suggestions for improvement of publications and blank forms. Additional blank sheets may be used if more space is needed.)*

TYPED NAME, GRADE, OR TITLE	TELEPHONE EXCHANGE/AUTOVON, PLUS EXTENSION	SIGNATURE

USAPPC V3.00

THE METRIC SYSTEM AND EQUIVALENTS

LINEAR MEASURE

1 Centimeter = 10 Millimeters = 0.01 Meters = 0.3937 Inches
1 Meter = 100 Centimeters = 1,000 Millimeters = 39.37 Inches
1 Kilometer = 1,000 Meters = 0.621 Miles

SQUARE MEASURE

1 Sq Centimeter = 100 Sq Millimeters = 0.155 Sq Inches
1 Sq Meter = 10,000 Sq Centimeters = 10.76 Sq Feet
1 Sq Kilometer = 1,000,000 Sq Meters = 0.386 Sq Miles

CUBIC MEASURE

1 Cu Centimeter = 1,000 Cu Millimeters = 0.06 Cu Inches
1 Cu Meter = 1,000,000 Cu Centimeters = 35.31 Cu Feet

LIQUID MEASURE

1 Milliliter = 0.001 Liters = 0.0338 Fluid Ounces
1 Liter = 1,000 Milliliters = 33.82 Fluid Ounces

TEMPERATURE

Degrees Fahrenheit (F) = °C • 9 ÷ 5 + 32
Degrees Celsius (C) = F° - 32 • 5 ÷ 9
212° Fahrenheit is equivalent to 100° Celsius
90° Fahrenheit is equivalent to 32.2° Celsius
32° Fahrenheit is equivalent to 0° Celsius

WEIGHTS

1 Gram = 0.001 Kilograms = 1,000 Milligrams = 0.035 Ounces
1 Kilogram = 1,000 Grams = 2.2 Lb
1 Metric Ton = 1,000 Kilograms = 1 Megagram = 1.1 Short Tons

APPROXIMATE CONVERSION FACTORS

TO CHANGE	TO	MULTIPLY BY
Inches	Millimeters	25.4
Inches	Centimeters	2.540
Feet	Meters	0.305
Yards	Meters	0.914
Miles	Kilometers	1.609
Square Inches	Square Centimeters	6.451
Square Feet	Square Meters	0.093
Square Yards	Square Meters	0.836
Square Miles	Square Kilometers	2.590
Acres	Square Hectometers	0.405
Cubic Feet	Cubic Meters	0.028
Cubic Yards	Cubic Meters	0.765
Fluid Ounces	Milliliters	29.573
Pints	Liters	0.473
Quarts	Liters	0.946
Gallons	Liters	3.785
Ounces	Grams	28.349
Pounds	Kilograms	0.4536
Short Tons	Metric Tons	0.907
Pound-Feet	Newton-Meters	1.356
Pounds Per Square Inch	Kilopascals	6.895
Miles Per Gallon	Kilometers Per Liter	0.425
Miles Per Hour	Kilometers Per Hour	1.609
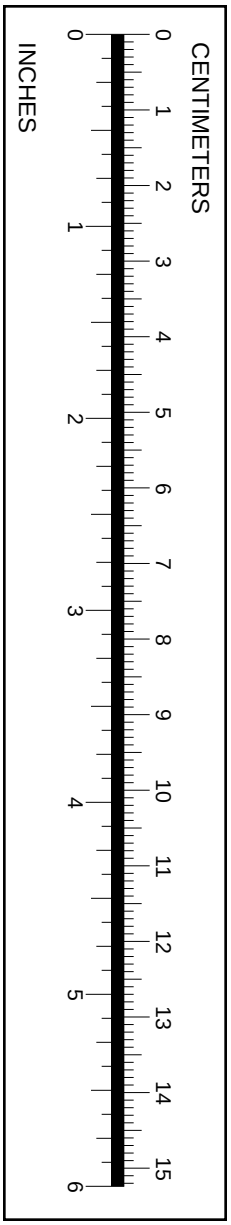
TO CHANGE	TO	MULTIPLY BY
Millimeters	Inches	0.03937
Centimeters	Inches	0.3937
Meters	Feet	3.280
Meters	Yards	1.094
Kilometers	Miles	0.621
Square Centimeters	Square Inches	0.155
Square Meters	Square Feet	10.764
Square Meters	Square Yards	1.196
Square Kilometers	Square Miles	0.386
Square Hectometers	Acres	2.471
Cubic Meters	Cubic Feet	35.315
Cubic Meters	Cubic Yards	1.308
Milliliters	Fluid Ounces	0.034
Liters	Pints	2.113
Liters	Quarts	1.057
Liters	Gallons	0.264
Grams	Ounces	0.035
Kilograms	Pounds	2.2046
Metric Tons	Short Tons	1.102
Newton-Meters	Pound-Feet	0.738
Kilopascals	Pounds Per Square Inch	0.145
Kilometers Per Liter	Miles Per Gallon	2.354
Kilometers Per Hour	Miles Per Hour	0.621